WorkCentre 7556 Family Service Documentation

Service Documentation

WorkCentre 7556 Family Service Documentation

705P01288

Initial Issue

08/2010

Xerox Private Data

All service documentation is supplied to Xerox external customers for informational purposes only. Xerox service documentation is intended for use by certified, product-trained service personnel only. Xerox does not warrant or represent that it will notify or provide to such customer any future change to this documentation. Customer performed service of equipment, or modules, components, or parts of such equipment may affect whether Xerox is responsible to fix machine defects under the warranty offered by Xerox with respect to such equipment. You should consult the applicable warranty for its terms regarding customer or third-party provided service.

If the customer services such equipment, modules, components or parts thereof, the customer releases Xerox from any and all liability for the customer actions, and the customer agrees to indemnify, defend and hold xerox harmless from any third party claims which arise directly or indirectly for such service.

While Xerox has tried to make the documentation accurate, Xerox will have no liability arising out of any inaccuracies or omissions. Changes are periodically made to this document. Changes, technical inaccuracies, and typographical errors will be corrected in subsequent editions.

Prepared by Creative and Technical Communications – North America

800 Phillips Road, Building 218-01A

Webster, New York 14580

ISO9001 and ISO27001 Certified

©2010 by Xerox Corporation. All rights reserved.

XEROX® and XEROX and design® are trademarks of Xerox Corporation in the US and/or other countries.

Changes are periodically made to this document. Changes, technical inaccuracies, and typographic errors will be corrected in subsequent editions.

CAUTION

This equipment generates, uses and can radiate radio frequency energy, and if not installed and used in accordance with the instructions documentation, may cause interference to radio communications. It has been tested and found to comply with the limits for a Class A computing device pursuant to subpart B of part 15 of FCC rules, which are designed to provide reasonable protection against such interference when operated in a commercial environment. Operation of this equipment in a residential area is likely to cause interference in which case the user, at his own expense, will be required to correct the interference.

Introduction

About this Manual iii
Organization iii
How to Use this Documentation iv
Symbology and Nomenclature v
Translated Warnings viii

About this Manual

This Service Manual is part of the multinational documentation system for this copier/printer. The Service Documentation is used in order to diagnose machine malfunctions, adjust components and has information which is used to maintain the product in superior operating condition. It is the controlling publication for a service call. Information on its use is found in the Introduction of the Service Documentation.

This manual contains information that applies to **USSG (XC) and ESG** (XE) configurations.

Service Manual Revision

The Service Manual will be updated as the machine changes or as problem areas are identified.

Organization

The titles of the sections and a description of the information contained in each section are contained in the following paragraphs:

Section 1 Service Call Procedures

This section contains procedures that determine what actions are to be taken during a service call on the machine and in what sequence they are to be completed. This is the entry level for all service calls.

Section 2 Status Indicator RAPs

This section contains the diagnostic aids for troubleshooting the Fault Code and non-Fault Code related faults (with the exception of image quality problems).

Section 3 Image Quality

This section contains the diagnostic aids for troubleshooting any image quality problems, as well as image quality specifications and image defect samples.

Section 4 Repairs/Adjustments

This section contains all the Adjustments and Repair procedures.

Repairs

Repairs include procedures for removal and replacement of parts which have the following special conditions:

When there is a personnel or machine safety issue.

When removal or replacement cannot be determined from the exploded view of the Parts List.

When there is a cleaning or a lubricating activity associated with the procedure.

When the part requires an adjustment after replacement.

When a special tool is required for removal or replacement.

Use the repair procedures for the correct order of removal and replacement, for warnings, cautions, and notes.

Adjustments

Adjustments include procedures for adjusting the parts that must be within specification for the correct operation of the system.

Use the adjustment procedures for the correct sequence of operation for specifications, warnings, cautions and notes.

Section 5: Parts Lists

This section contains the Copier/Printer Parts List.

Section 6: General Procedures/Information

This section contains General Procedures, Diagnostic Programs, and Copier/Printer Information.

Section 7: Wiring Data

This section contains drawings, lists of plug/jack locations, and diagrams of the power distribution wire networks in the machine. Individual wire networks are shown in the Circuit Diagrams contained in Section 2. This section also contains the Block Schematic Diagrams.

How to Use this Documentation

The Service Call Procedures in Section 1 describe the sequence of activities used during the service call. The call **must** be entered using these procedures.

Use of the Block Schematic Diagrams

Block Schematic Diagrams (BSDs) are included in Section 7 (Wiring Data) of the Service Manual. The BSDs show the functional relationship of the electrical circuitry to any mechanical, or non-mechanical, inputs or outputs throughout the machine. Inputs and outputs such as motor drive, mechanical linkages, operator actions, and air flow are shown. The BSDs will provide an overall view of how the entire subsystem works.

It should be noted that the BSDs no longer contain an Input Power Block referring to Chain 1. It will be necessary to refer to the Wirenets in order to trace a wire back to its source.

Symbology and Nomenclature

The following reference symbols are used throughout the documentation.

Warnings, Cautions, and Notes

Warnings, Cautions, and Notes will be found throughout the Service Documentation. The words **WARNING** or **CAUTION** may be listed on an illustration when the specific component associated with the potential hazard is pointed out; however, the message of the **WARNING** or **CAUTION** is always located in the text. Their definitions are as follows:

WARNING

A Warning is used whenever an operating or maintenance procedure, a practice, condition, or statement, if not strictly observed, could result in personal injury.

CAUTION

A Caution is used whenever an operating or maintenance procedure, a practice, condition, or statement, if not strictly observed, could result in damage to the equipment.

NOTE: *A Note is used whenever it is necessary to highlight an operating or maintenance procedure, practice, condition, or statement.*

Machine Safety Icons

The following safety icons are displayed on the machine:

Figure 1 Customer Access Label

This symbol indicates that a surface can be hot. Use caution when reaching in the machine to avoid touching the hot surfaces.

Figure 2 Heated Surface Label

Danger label indicates where electrical currents exist when the machine is closed and operating. Use caution when reaching in the machine.

Figure 3 Shock Hazard Label

These symbols indicate components that may be damaged by Electrostatic Discharge (ESD).

Figure 4 ESD warning Label

Electrostatic Discharge (ESD) Field Service Kit

The purpose of the ESD Protection Program is to preserve the inherent reliability and quality of electronic components that are handled by the Field Service Personnel. This program is being implemented now as a direct result of advances in microcircuitry technology, as well as a new acknowledgment of the magnitude of the ESD problem in the electronics industry today.

This program will reduce Field Service costs that are charged to PWB failures. Ninety percent of all PWB failures that are ESD related do not occur immediately. Using the ESD Field Service Kit will eliminate these delayed failures and intermittent problems caused by ESD. This will improve product reliability and reduce callbacks.

The ESD Field Service Kit should be used whenever Printed Wiring Boards or ESD sensitive components are being handled. This includes activities like replacing or reseating of circuit boards or connectors. The kit should also be used in order to prevent additional damage when circuit boards are returned for repair.

The instructions for using the ESD Field Service Kit can be found in ESD Field Service Kit Usage in the General Procedures section of the Service Documentation.

Illustration Symbols

Figure 5 shows symbols and conventions that are commonly used in illustrations.

REFERENCE SYMBOLOGY

Test data, notes, adjustments, and parts lists are supportive to the BSD and RAP information. This supportive data is referenced, using the symbols shown in the following paragraphs:

TEST DATA

TD

This symbol appears on the BSD whenever a test data reference is necessary in order to verify the presence of a signal.

NOTES

2

This symbol is used to refer to notes. The notes normally appear on the same page.

ADJUSTMENTS

This symbol refers to adjustments on the Service Data Section.

PARTS LISTS

PL2-XX

This symbol refers to a parts list on the Service Data Section.
PL indicates that this is a parts list reference and, in this example, the exploded view drawing is on Parts List 2-XX. Parts list reference appear on the BSDs next to all replaceable parts shown on the diagram.

TEST POINTS

TP1

This symbol is used to identify a test point/test hole available for measuring a signal.

BSD GRAPHICS

A A

This symbol indicates the continuation of a signal line in a vertical direction.

This symbol indicates the continuation of a signal line in a horizontal direction.

This symbol indicates the direction of signal flow.

This symbol indicates a feedback signal.

This symbol is used to show a twisted pair of wires.

[X-XXX]

This symbol placed above a signal name on a BSD indicates the input or output component control code for that signal.

[X-XXX] [X-XXX]

This symbol placed above a signal name on a BSD indicates that two component control codes (an output and an input) are required to check that signal.

[X-XXX/X-XXX]

This symbol placed above a signal name on a BSD indicates component control codes for two components, in this example, two Paper Trays. The left hand code is for Paper Tray 1, and the right hand code is for Paper Tray 2.

X-XXX

Fault Codes Indicator shown on BSD.

1

The Flag symbol indicates a reference point into a Circuit Diagram from a RAP. Instructions will be given to check for an open circuit, a short circuit, or an intermittent condition

Figure 5 Illustration Symbols

Signal Nomenclature

Refer to Figure 6 for an example of Signal Nomenclature used in Circuit Diagrams and BSDs.

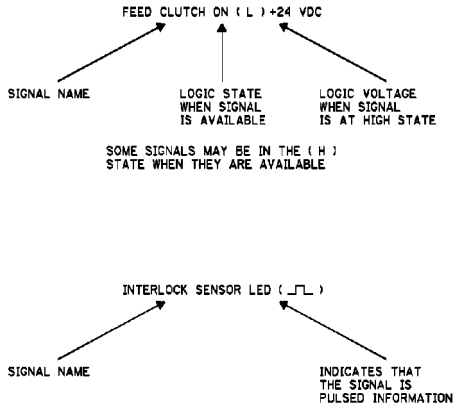

Figure 6 Signal Nomenclature

Voltage Measurement and Specifications

Measurements of DC voltage must be made with reference to the specified DC Common, unless some other point is referenced in a diagnostic procedure. All measurements of AC voltage should be made with respect to the adjacent return or ACN wire.

Table 1 Voltage Measurement and Specifications

VOLTAGE	SPECIFICATION
INPUT POWER 220 V	198 VAC TO 242 VAC
INPUT POWER 100 V	90 VAC TO 135 VAC
INPUT POWER 120 V	90 VAC TO 135 VAC
+5 VDC	+4.75 VDC TO +5.25 VDC
+24 VDC	+23.37 VDC TO +27.06 VDC

Logic Voltage Levels

Measurements of logic levels must be made with reference to the specified DC Common, unless some other point is referenced in a diagnostic procedure.

Table 2 Logic Levels

VOLTAGE	H/L SPECIFICATIONS
+5 VDC	H= +3.00 TO +5.25 VDC L= 0.0 TO 0.8 VDC
+24 VDC	H= +23.37 TO +27.06 VDC L= 0.0 TO 0.8 VDC

DC Voltage Measurements in RAPs

The RAPs have been designed so that when it is required to use the DMM to measure a DC voltage, the first test point listed is the location for the red (+) meter lead and the second test point is the location for the black meter lead. For example, the following statement may be found in a RAP:

There is +5 VDC from TP7 to TP68.

In this example, the red meter lead would be placed on TP7 and the black meter lead on TP68.

Other examples of a statement found in a RAP might be:

- **There is -15 VDC from TP21 to TP33.**
- **-15 VDC is measured between TP21 and TP33.**

In these examples, the red meter lead would be placed on TP21 and the black meter lead would be placed on TP33.

If a second test point is not given, it is assumed that the black meter lead may be attached to the copier frame.

Translated Warnings

All translated warnings for this documentation are located at point-of-need.

1 Service Call Procedures

Service Call Procedures..... 1-3
Initial Actions..... 1-3
Call Flow 1-4
Detailed Maintenance Activities (HFSI)..... 1-5
Cleaning Procedures..... 1-7
Final Actions..... 1-7

Service Call Procedures

Service Strategy

The service strategy for the WorkCentre Copier/Printers is to perform any High Frequency Service Item (HFSI) actions before attempting to repair any problems. Some problems will be corrected by this strategy without the need to diagnose them. The Repair Analysis Procedures (RAPs) will be used for any remaining problems.

Problems that occur in the Basic Printer mode will be repaired before problems that occur when using the accessories.

Image Quality problems should be repaired after all other problems are repaired.

Service Call Procedures

The **Service Call Procedures** are a guide for performing any service on this machine. The procedures are designed to be used with the Service Manual. Perform each step in order.

Initial Actions

The Initial Actions gather information about the condition of the machine and the problem that caused the service call.

Call Flow

Call Flow summarizes the sequence of the Service Call Procedures.

Detailed Maintenance Activities

This section provides the information needed to perform the dC135 High Frequency Service Item (HFSI) actions.

Cleaning Procedures

The cleaning procedures list what needs to be cleaned at each service call.

Final Actions

The Final Actions will test the copier/printer and return it to the customer. Administrative activities are also performed in the Final Actions.

Initial Actions

Purpose

The purpose of the Initial Action section of the Service Call Procedures is to determine the reason for the service call and to identify and organize the actions which must be performed.

Procedure

1. Gather the information about the service call and the condition of the copier/printer.
   a. Question the operator(s). Ask the customer if the problems are related to Xerox Secure Access. Ask about the location of most recent paper jams. Ask about the image quality and the copier/printer performance in general, including any unusual sounds or other indications.
   b. After informing the customer, disconnect the machine from the customer's network.
   c. Check that the power cords are in good condition, correctly plugged in the power source, and free from any defects that would be a safety hazard. Repair or replace the power cords as required. Check that the circuit breakers are not tripped.
   d. If the machine appears to be inoperative, go to Call Flow and repair the problem. Then continue below.
   e. Inspect any rejected copies. Inquire as to, or otherwise determine, the paper quality and weight. The specified papers for optimum image quality with this machine are 24 lb. Xerox Color Xpressions Plus (XC) or 90 gsm Colortech + (XE). Look for any damage to the copies, oil marks, image quality defects, or other indications of a problem.
   f. Record the billing meter readings.
   g. Enter CE Mode (see UI Diagnostic (CSE) Mode).
   h. View HFSI Activity (see dC135)

      NOTE: *If a fault code is displayed while performing a diagnostics procedure, go to that fault code RAP and repair the fault. Return to Diagnostics and continue with the dC procedure that you were performing.*

   i. Determine what HSFI action is required based on the customer output volume. Refer to the Detailed Maintenance Activities (HFSI) section for the detailed HSFI information. Record any items that require action.
   j. Access UI Diagnostics (see UI Diagnostic (CSE) Mode). Select **Faults** to display the information in the Jam Counter, Failure Counter, and the Shutdown History. Classify this information into categories:
      - Information that is related to the problem that caused the service call.
      - Information that is related to secondary problems.
      - Information that does not require action, such as a single occurrence of a problem.
   k. Check the Service Log for any recent activities that are related to the problem that caused the service call or any secondary problem.
2. Perform any required HSFI activities identified above. Refer to Detailed Maintenance Activities (HFSI).
3. Exit diagnostics. Try to duplicate the problem by running the same jobs that the customer was running.
4. Go to Call Flow.

Call Flow

This procedure should be performed at every service call.

Initial Actions

Ask the operator about the problem. If the problem appears to be related to operator error, or an attempt to perform a job outside of the machine specifications, assist the customer in learning the correct procedure.

Procedure

NOTE: *If The product name displayed on the UI is shown as XXXXX-XXXXX go to No-Run RAP*

NOTE: *If customers cannot access machine functions because Xerox Secure Access is not functioning properly go to the OF 18-1 RAP to repair the problem, then return here and continue.*

Switch on the Main Power. **The machine comes to a Ready condition.**

Y N

Go to the Machine Not Ready RAP.

A xerographics-related message (Drum Cartridge Error, Replace Toner), which cannot be cleared, is displayed on the UI.

Y N

The reported problem occurs in Print Mode ONLY.

Y N

Place the Color Test Pattern on the Document Glass. Make a copy from each paper tray. **The Copier/Printer can copy from all trays.**

Y N

NOTE: *Some codes will appear only in the Last 40 Faults list Other faults (paper feed and Tray Module faults) appear only as messages on the UI; fault codes for these problems are generated only when the machine is operated (printing test patterns) in diagnostic mode.*

A fault code is displayed.

Y N

The problem is related to a specific paper tray (for example, erroneous "Tray X out of Paper" message).

Y N

For intermittent problems, Go to GP 23.

Enter CE Mode, (see Entering and Exiting CE Mode) and Access UI Diagnostics (see UI Diagnostic (CSE) Mode. Select Print Test Patterns and Print Test Pattern 2 from the suspect tray. When a fault is declared, go to the RAP for that fault code.

Go to the RAP for the displayed fault.

Place two originals into the DADF and program a duplex job. **The Copier/Printer can copy from the DADF.**

A B

Y N

A fault code is displayed.

Y N

Check the DADF Document Sensors for debris or damage. Check the mechanical drives and Feed Rolls for contamination, wear, damage, or binding.

Go to the RAP for the displayed fault code.

Check the image quality in the BASIC COPIER MODE:

- Select a tray that is loaded with 11 X 17 or A3 paper.
- Select the following parameters:
  - Output Color to **Auto**
  - Original Type to **Photo and Text Halftone**
  - Reduce/Enlarge **Auto**
  - Lighter/Darker to **Auto Contrast**
  - Sharpness to **Normal**
  - Preset Color Balance **Normal**
  - Color Shift to **Normal**
  - Color Saturation to **Normal**
  - Copy Position to **No Shift**
  - Variable Color Balance **Normal**
- Run four copies of the Color Test Pattern.

The Image Quality of the copies produced is acceptable.

Y N

Go to the IQ1 RAP.

Go to Final Actions.

The problem occurs in all print jobs.

Y N

If the problem is specific to a single application or group of applications, ensure that current drivers are loaded. If the problem persists, escalate the call to the Customer Support Center.

Go to GP 7 (Network Printing Simulation) and send a print job. **An acceptable print is produced.**

Y N

- verify machine settings
- reload system software
- replace the SBC PWB (PL).

The problem is in the customer network or the setup. Check the following:

- Ensure that the Static IP/DHCP setting matches the customer's network
- Verify that the IOT IP address is correct.

When resolved, go to Final Actions.

Go to the Xerographic Messages RAP.

A B

Detailed Maintenance Activities (HFSI)

Procedure

1. Clean the ADC Sensor and LPH lenses on every call.
2. Refer to the HFSI activity viewed during Initial Actions.

NOTE: *The HFSI report lists several counters that do not require maintenance. Disregard any counters not listed in Table 1.*

3. Perform the Service Actions in Table 1 for any High Frequency Service Item (HFSI) counters that are over threshold or approaching the threshold. Using the customer's output volume numbers (high, medium, or low volume), evaluate which HFSI actions should be performed now to avoid an additional service call in the near future.
4. Refer to Cleaning Procedures for detailed cleaning instructions.
5. After servicing an HFSI, enter CE Mode (see UI Diagnostic (CSE) Mode) and select Adjustment-Others\ HFSI Counter. Select the counter number and press **Details**. Select **Reset Current Value**. Threshold values can be changed by selecting **Change Spec Life** and entering the new count.

Table 1 High Frequency Service Items

Counter	Name	Service Action to be performed	Threshold
954-800	Tray 1 Feed counter	Replace the Feed, Nudger, and Retard Rolls (PL 9.5).	300K sheets fed
954-801	Tray 2 Feed counter	Replace the Feed, Nudger, and Retard Rolls (PL 11.8 for TTM or PL 10.4 for 3TM).	300Ksheets fed
954-802	Tray 3 Feed counter	Replace the Feed, Nudger, and Retard Rolls(PL 11.10 for TTM or PL 10.6 for 3TM).	300K sheets fed
954-803	Tray 4 Feed counter	Replace the Feed, Nudger, and Retard Rolls (PL 11.12 for TTM or PL 10.8 for 3TM).	300K sheets fed
954-804	Tray 6 (HCF) Feed counter	Replace the Feed and Nudger Rolls ({PL 28.5) and the Retard Roll (PL 28.6).	300K sheets fed
954-805	Tray 5 Feed counter	Replace the Feed and Nudger Rolls (PL 13.3) and the Retard Roll and Bottom Pad (PL 13.4).	50K sheets fed
954-820	Transfer Belt Assembly	Replace the Transfer Belt Assembly (PL 6.1)	48,000,000 Total length converted to A4 equivalent; A4 = 100
954-821	2nd BTR Unit	Replace the 2nd BTR Unit (PL 14.2) CRU - customer resets counter with button on UI ***NOTE:*** *Customer can reset counter to clear "replace now" message without replacing component*	20,000,000 Total length converted to A4 equivalent; A4 = 100
954-822	Transfer Belt Cleaner Assembly	Replace the Transfer Belt Cleaner (PL 6.1) CRU - customer resets counter with button on UI ***NOTE:*** *Customer can reset counter to clear "replace now" message without replacing component*	18,300,000 Total length converted to A4 equivalent; A4 = 100
954-830	Yellow Developer Housing (7545/56)	Replace Yellow Developer Housing PL 5.2	480,000 increments by 1 for A4/letter size or smaller; by 2 for longer than letter size
954-831	Magenta Developer Housing (7545/56)	Replace Magenta Developer Housing PL 5.2	480,000 increments by 1 for A4/letter size or smaller; by 2 for longer than letter size
954-832	Cyan Developer Housing (7545/56)	Replace Cyan Developer Housing PL 5.2	480,000 increments by 1 for A4/letter size or smaller; by 2 for longer than letter size
954-833	Black Developer Housing (7545/56)	Replace Black Developer Housing PL 5.2	480,000 increments by 1 for A4/letter size or smaller; by 2 for longer than letter size
954-834	Yellow Developer Housing (7525/30/35)	Replace Yellow Developer Housing PL 5.2	480,000 increments by 1 for A4/letter size or smaller; by 2 for longer than letter size

Table 1 High Frequency Service Items

Counter	Name	Service Action to be performed	Threshold
954-835	Magenta Developer Housing (7525/30/35)	Replace Magenta Developer Housing PL 5.2	480,000 increments by 1 for A4/letter size or smaller; by 2 for longer than letter size
954-836	Cyan Developer Housing (7525/30/35)	Replace Cyan Developer Housing PL 5.2	480,000 increments by 1 for A4/letter size or smaller; by 2 for longer than letter size
954-837	Black Developer Housing (7525/30/35)	Replace Black Developer Housing PL 5.2	480,000 increments by 1 for A4/letter size or smaller; by 2 for longer than letter size
954-850	Fuser	Replace the Fuser (PL 7.1) Counter automatically clears when new Fuser is installed	36,000,000 Area conversion, with A4L = 100 counts/sheet, 8.5x11 = 96 counts/sheet, 11x17 = 193 counts/sheet, A3 = 200 counts/sheet, etc.
954-860	Deodorant Filter	Replace the Deodorant Filter (PL x.x)	12,000,000 increments when Fuser Exit Sensor is turned off after a sheet passes through Fuser Exit Sensor. A page of A4 LEF is counted as "100". Count value = paper length [0.1mm]/21
954-870	LPH Clean Counter		31,536,000 increments every 24 hours or at power on. Every 24 hours:+86400 Power Off-1 (when continuous power on time is less than 24 hours): Period of time (sec.) from Power On until Power Off. Power Off-2 (when continuos power on time is over 24 hours): Period of time (sec.) passed since the last counter increment.
954-862	Suction Filter	Replace the Suction Filter (PL 4.3B)	12,000,000 increments when Fuser Exit Sensor is turned off after a sheet passes through Fuser Exit Sensor. A page of A4 LEF is counted as "100". Count value = paper length [0.1mm]/21

Cleaning Procedures

Purpose

The purpose is to provide cleaning procedures to be performed at every call.

Procedure

CAUTION

Do not use any solvents unless directed to do so by the Service Manual.

General Cleaning

Use a dry lint free cloth or a lint free cloth moistened with water for all cleaning unless directed otherwise by the Service Manual. Wipe with a dry lint free cloth if a moistened cloth is used.

1. **Feed Components (Rolls and Pads)**

   Use a dry lint free cloth or a lint free cloth moistened with water. Wipe with a dry lint free cloth
2. **LPH**

   Use the cleaning plates to clean the LPH windows (follow the procedure in the User Guide).
3. **Toner Dispense Units**

   Vacuum the Toner Dispense units.
4. **Jam Sensors**

   Clean the sensors with a dry cotton swab.
5. **Transfer Belt Cleaning**

   Check the Transfer Belt surface and wipe with a dry lint free cloth. If the surface is excessively dirty, replace the Transfer Belt (PL 6.3).

   Do not rub the Transfer Belt Cleaning Blade. If it is necessary to clean the blade, use a soft brush or dry swab to brush away contamination. Rubbing will remove the protective coating on the blade.
6. **Fuser Components** (best cleaned when hot)

   Switch off the power. Allow the Fuser to cool enough so that it does not present a burn hazard.

   Wipe with a lint free cloth.
7. **Scanner**
   a. Switch off the power.
   b. Using the optical Cleaning Cloth, clean the front and rear of the Document Glass, Document Cover, White Reference Strip, Reflector, and Mirror.
   c. Clean the Exposure Lamp with a clean cloth and Film Remover.
   d. Clean the Lens with Lens and Mirror Cleaner and lint free cloth.
8. **DADF**

   Check the paper path for debris or damage. Clean the rolls with a clean cloth and Film Remover as required.
9. **Finisher**

   Check the paper path for debris or damage. Clean the Finisher with a dry lint free cloth.

Final Actions

Purpose

The intent of this procedure is to be used as a guide to follow at the end of every service call.

Procedure

1. Ensure that the exterior of the copier/printer and the adjacent area are clean. Use a dry cloth or a cloth moistened with water to clean the copier/printer. Do not use solvents.
2. Check the supply of consumables. Ensure that an adequate supply of consumables is available according to local operating procedures.
3. Conduct any operator training that is needed. Ensure that the operator understands that the Automatic Gradation Adjustment procedure in the User Guide should be used to calibrate the colors.
4. Complete the Service Log (for blank copy, see Library.
5. Perform the following steps to make a copy of the Demonstration Original for the Customer:
   a. Load Tray 1 with 8.5 x 11” (A4) or 11 x 17” (A3) paper.
   b. Place the Color Test Pattern on the glass with the short edge of the test pattern registered to the left edge of the glass. Select Tray 1 and make a single copy.
   c. Print out the Machine Settings (Configuration Report). Store this report with the service log in Tray 1.
   d. Ask the customer to verify the Print and Scan functions.
   e. Present the copies to the customer.
6. Reconnect the machine to the customer network. Verify function.
7. Issue copy credits as needed.
8. Discuss the service call with the customer to ensure that the customer understands what has been done and is satisfied with the results of the service call.

2 Status Indicator RAPs

Chain 302 UI

302-315 RAP 2-9
302-316 RAP 2-9
302-317 RAP 2-10
302-321 RAP 2-10

Chain 303 MRC

303-306 RAP 2-11
303-307 RAP 2-11
303-316 RAP 2-12
303-317 RAP 2-12
303-318 RAP 2-13
303-319 RAP 2-13
303-320 RAP 2-14
303-324 RAP 2-14
303-325 RAP 2-15
303-326 RAP 2-15
303-327 RAP 2-16
303-329 RAP 2-16
303-330 RAP 2-17
303-332 RAP 2-17
303-338 RAP 2-18
303-346 RAP 2-18
303-347 RAP 2-19
303-355 RAP 2-19
303-380 RAP 2-20
303-390 RAP 2-20
303-398 RAP 2-21
303-399 RAP 2-21
303-401 RAP 2-22
303-403 RAP 2-22
303-417 RAP 2-23
303-777 RAP 2-23
303-788 RAP 2-24
303-790 RAP 2-24

Chain 305 DADF

305-121 DADF Feed Out Sensor On Jam 2-25
305-122 DADF Simplex/Side 1 Pre Reg Sensor On Jam 2-26
305-123 DADF Simplex/Side 1 Reg Sensor On Jam 2-27
305-125 DADF Reg Sensor Off Jam 2-28
305-131 DADF Invert Sensor On Jam (During Invert) 2-28
305-132 DADF Invert Sensor On Jam 2-29
305-134 DADF Inverter Sensor Off Jam (During Invert) 2-29
305-135 DADF Side 2 Pre Reg Sensor On Jam 2-30
305-136 DADF Side 2 Reg Sensor On Jam 2-30
305-139 DADF Invert Sensor Off Jam 2-31
305-145 DADF Reg Sensor Off Jam (Invert) 2-31
305-146 DADF Pre Reg Sensor Off Jam 2-32
305-147 DADF Pre Reg Sensor Off Jam (Invert) 2-32
305-194 Mixed Size Mismatch Jam 2-33
305-196 Size Mismatch Jam On No Mix-Size 2-33
305-197 Prohibit Combine Size Jam 2-34
305-198 Too Short Size Jam 2-34
305-199 Too Long Size Jam 2-35
305-210 DADF Download Fail 2-35
305-275 DADF RAM Test Fail 2-36
305-280 DADF EEPROM Fail 2-36
305-305 DADF Feeder Cover Interlock Open (when running) 2-37
305-906 DADF Feed Out Sensor Static Jam 2-37
305-907 DADF Pre Reg Sensor Static Jam 2-38
305-908 DADF Reg Sensor Static Jam 2-38
305-913 DADF Inverter Sensor Static Jam 2-39
305-915 DADF APS Sensor 1 Static Jam 2-39
305-916 DADF APS Sensor 2 Static Jam 2-40
305-917 DADF APS Sensor 3 Static Jam 2-40
305-940 DADF No Original 2-41
305-941 Doc number of sheets is insufficient 2-41
305-945 FS-Size Mismatch Jam On No Mix-Size or SS Mix-Size (Cont) 2-42
305-946 SS-Size Mismatch Jam On No Mix-Size (Cont) 2-42
305-947 FS-Size Mismatch Jam On No Mix-Size or SS Mix-Size 2-43
305-948 SS-Size Mismatch Jam On No Mix-Size 2-43

Chain 310 Fusing

310-300 Fuser Hot Not Ready Return Time Fault 2-45
310-311 Heat Belt STS Rear Disconnection Fault 2-45
310-320 Heat Belt STS Rear Over Temperature Fault 2-46
310-326 Fuser On Time Fault 2-46
310-330 Fuser Motor Fault 2-47
310-360 IH Driver Input High Voltage Fault 2-48
310-361 IH Driver Input Low Voltage Fault 2-48
310-362 IH Driver Surge Fault 2-49
310-363 IGBT Temperature High Fault 2-49
310-364 IGBT Temperature Sensor Fault 2-50
310-367 Input Low Current Fault 2-50
310-368 Encoder Pulse Fault 2-51
310-369 IH Driver Communication Fault 2-51
310-370 IH Driver Freeze Fault 2-52
310-371 Heat Belt STS Center Disconnection Fault 2-52
310-372 Heat Roll STS Center Over Temperature Fault 2-53
310-375 Heat Belt STS Center Warm Up Time Fault 2-53
310-376 Heat Belt STS Rear Warm Up Time Fault 2-54
310-378 Heat Belt Rotation Fault 2-54
310-380 P/Roll Latch Motor Fault 2-55
310-381 Fuser Assy Illegal Fault 2-56
310-382 Fuser Thermostat Fault 2-56

310-398 Fuser Fan Fault 2-57
310-420 Fuser Assembly Near Life Warning 2-57
310-421 Fuser Assembly Life Over Warning 2-58

Chain 312 Professional Finisher

312-112 (Pro) H-Transport Entrance Sensor On Jam 2-59
312-113 (Pro) Booklet In Sensor On Jam 2-59
312-114 (Pro) Booklet In Sensor Off Jam 2-60
312-115 (Pro) Booklet Folder Roll Exit Sensor On Jam 2-60
312-123 (Pro) H-Transport Exit Sensor On Jam 2-61
312-124 (Pro) H-Transport Top Tray Exit Sensor Off Jam 2-61
312-125 (Pro) Gate Sensor On Jam 2-62
312-132 (Pro) Transport Entrance Sensor On Jam 2-62
312-142 (Pro) Buffer Path Sensor On Jam 2-63
312-151(Pro) Compiler Exit Sensor Off Jam 2-63
312-152 (Pro) Compiler Exit Sensor On Jam 2-64
312-161 (Pro) Set Eject Jam 2-64
312-162 (Pro) H-Transport Exit Sensor On Jam 2-65
312-171 (Pro) Top Tray Exit Sensor On Jam 2-65
312-172 (Pro) Top Tray Exit Sensor Off Jam 2-66
312-180 (Pro) Booklet Folder Roll Exit Sensor Off Jam 2-66
312-211(Pro) Stacker Tray Fault 2-67
312-212 (Pro) Stacker Upper Limit Fault 2-67
312-213 (Pro) Stacker Lower Limit Fault 2-68
312-221 (Pro) Front Tamper Home Sensor On Fault 2-68
312-223(Pro) Front Tamper Home Sensor Off Fault 2-69
312-224 (Pro) Rear Tamper Home Sensor Off Fault 2-69
312-225 (Pro) Booklet Tamper F Home Sensor On Fault 2-70
312-226 (Pro) Booklet Tamper F Home Sensor Off Fault 2-70
312-227 (Pro) Booklet End Guide Home Sensor Off Fault 2-71
312-228 (Pro) Booklet End Guide Home Sensor On Fault 2-71
312-229 (Pro) Booklet Tamper R Home Sensor On Fault 2-72
312-230 (Pro) Booklet Tamper R Home Sensor Off Fault 2-72
312-232 (Pro) Puncher Home Sensor Off Fault 2-73
312-243 (Pro) Booklet Knife Home Sensor On Fault 2-73
312-246 (Pro) Booklet Stapler Fault 2-74
312-247 (Pro) Side Registration Sensor Off Fault 2-76
312-258 (Pro) Booklet Broken 2-77
312-260 (Pro) Eject Clamp Home Sensor On Fault 2-77
312-261 (Pro) Booklet Knife Folding Sensor Fault 2-78
312-263 (Pro) Rear Tamper Home Sensor On Fault 2-79
312-264 (Pro) Booklet Drawer Broken Fault 2-79
312-265 (Pro) Booklet Knife Home Sensor Off Fault 2-80
312-266 (Pro) Booklet Compiler No Paper Sensor Fault 2-81
312-269 (Pro) Booklet Sub-CPU Communications Fault 2-82
312-282 (Pro) Eject Clamp Home Sensor Off Fault 2-84
312-283 (Pro) Set Clamp Home Sensor On Fault 2-84
312-284 (Pro) Set Clamp Home Sensor Off Fault 2-85
312-291 (Pro) Stapler Fault 2-85
312-295 (Pro) Stapler Move Position Sensor On Fault 2-86
312-296 (Pro) Stapler Move Position Sensor Off Fault 2-86
312-300 (Pro) Eject Cover Open 2-87
312-302 (Pro) Finisher Front Door Interlock Open 2-87
312-303 (Pro) H-Transport Cover Open 2-88
312-307 (Pro) Booklet Drawer Set Fault 2-88
312-320 (Pro) Puncher Home Sensor On Fault 2-89
312-322 (Pro) Puncher Move Home Sensor Off Fault 2-89
312-323 (Pro) Puncher Move Home Sensor On Fault 2-90
312-330 (Pro) Decurler Cam Home Sensor Off Fault 2-90
312-332 (Pro) Decurler Cam Home Sensor On Fault 2-91
312-350 (Pro) Finisher Communication 2-91
312-900 (Pro) Paper at Buffer Path Sensor 2-92
312-901 (Pro) Paper at H-Transport Entrance Sensor 2-92
312-902 (Pro) Paper at H-Transport Exit Sensor 2-93
312-903 (Pro) Paper at Compiler Exit Sensor 2-93
312-905 (Pro) Paper at Compiler Tray No Paper Sensor 2-94
312-907 (Pro) Paper at Top Tray Exit Sensor 2-94
312-910 (Pro) Staple Ready Sensor Fault 2-95
312-916 (Pro) Stapler NG 2-95
312-920 (Pro) Paper at Gate Sensor (Top Tray Job) 2-96
312-921 (Pro) Paper at Gate Sensor (Compiler Path Job) 2-96
312-922 (Pro) Paper at Gate Sensor (Buffer Path Job) 2-97
312-925 (Pro) Stacker Lower Safety Warning 2-97
312-930 (Pro) Full Stack Detected 2-98
312-935 (Pro) Paper at Transport Entrance Sensor 2-98
312-944 (Pro) Stacker Set Over Full 2-99
312-945 (Pro) Low Staples 2-99
312-946 (Pro) Top Tray Full 2-100
312-949 (Pro) Puncher Waste Bin Open 2-100
312-961 (Pro) Mix Stack detected 2-101
312-963 (Pro) Puncher Waste Bin Full 2-101
312-978 (Pro) Booklet Stapler NG 2-102
312-983 (Pro) Booklet Tray Full was detected 2-104
312-984 (Pro) Booklet Low Staple F 2-104
312-989 (Pro) Booklet Low Staple R 2-105

Chain 312 Integrated Finisher

312-132 (Int) Entrance Sensor ON Jam 2-107
312-151 (Int) Compiler Exit Sensor OFF Jam 2-108
312-152 (Int) Compiler Exit Sensor ON Jam 2-109
312-161 (Int) Set Eject Jam 2-110
312-211 (Int) Stacker Tray Fault 2-111
312-221 (Int) Front Tamper Home Sensor ON Fault 2-113
312-223 (Int) Front Tamper Home Sensor OFF Fault 2-114
312-224 (Int) Rear Tamper Home Sensor OFF Fault 2-115
312-259 (Int) Eject Home Sensor ON Fault 2-116
312-263 (Int) Rear Tamper Home Sensor ON Fault 2-117
312-280 (Int) Eject Home Sensor OFF Fault 2-118
312-283 (Int) Set Clamp Home Sensor ON Fault 2-119
312-284 (Int) Set Clamp Home Sensor OFF Fault 2-120
312-291 (Int) Stapler Fault 2-121
312-301 (Int) Top Cover Interlock OPEN 2-122
312-302 (Int) Front Cover Interlock OPEN 2-123
312-903 (Int) Paper Remains at Compiler Exit Sensor 2-123

312-928 (Int) Scratch Sheet Compile 2-124
312-930 (Int) Stacker Tray Full RAP 2-124
312-935 (Int) Paper Remains at Entrance Sensor 2-125
312-976 (Int) Staple Fail 2-125
312-977 (Int) Staple Ready Fail 2-126
312-979 (Int) Stapler Near Empty RAP 2-126

Chain 312 Finisher (LX)

312-111 (LX) H-Transport Entrance Sensor Off Jam A 2-127
312-112 (LX) H-Transport Entrance Sensor On Jam A 2-127
312-126 (LX) H-Transport Entrance Sensor Off Jam B 2-128
312-131 (LX) H-Transport Entrance Sensor On Jam B 2-129
312-132 (LX) Finisher Entrance Sensor On Jam 2-130
312-151 (LX) Compiler Exit Sensor Off Jam 2-131
312-152 (LX) Compiler Exit Sensor On Jam 2-131
312-161 (LX) Finisher Set Eject Jam 2-132
312-211 (LX) Stacker Tray Fault 2-133
312-212 (LX) Stacker Tray Upper Limit Fault 2-134
312-213 (LX) Stacker Tray Lower Limit Fault 2-135
312-221 (LX) Front Tamper Home Sensor On Fault 2-136
312-223 (LX) Front Tamper Home Sensor Off Fault 2-137
312-224 (LX) Rear Tamper Home Sensor Off Fault 2-138
312-243 (LX) Booklet Folder Home Sensor On Fault 2-139
312-249 (LX) Booklet Front Stapler Fault 2-140
312-260 (LX) Eject Clamp Home Sensor On Fault 2-140
312-263 (LX) Rear Tamper Fault 2-141
312-265 (LX) Booklet Folder Home Sensor OFF Fault 2-142
312-268 (LX) Booklet Rear Stapler Fault 2-143
312-269 (LX) Booklet Sub-CPU Communications Fault 2-143
312-282 (LX) Eject Clamp Home Sensor Off Fault 2-144
312-283 (LX) Set Clamp Home Sensor On Fault 2-145
312-284 (LX) Set Clamp Home Sensor Off Fault 2-146
312-291 (LX) Stapler Fault 2-147
312-295 (LX) Stapler Move Position Sensor On Fault 2-147
312-296 (LX) Staple Move Sensor Off Fault 2-148
312-300 (LX) Eject Cover Open 2-149
312-302 (LX) Finisher Front Cover Open 2-149
312-303 (LX) Finisher H-Transport Cover Open 2-150
312-320 (LX) Punch Home Sensor On Fault 2-150
312-334 (LX) Download Mode Fault 2-151
312-500 (LX) Download Fault 2-151
312-700 (LX) Punch Box Nearly Full 2-152
312-901 (LX) H-Transport Entrance Sensor Static Jam 2-152
312-903 (LX) Paper Remains at Compiler Exit Sensor 2-153
312-905 (LX) Compiler Tray No Paper Sensor Static JAM 2-153
312-917 (LX) Stacker Tray Stapled Set Over Count 2-154
312-923 (LX) H-Transport Entrance Sensor Static Jam 2-154
312-930 (LX) Stacker Tray Full RAP 2-155
312-935 (LX) Paper at Finisher Entrance Sensor 2-155
312-949 (LX) Punch Box Missing 2-156
312-966 (LX) Scratch Sheet Compile 2-156
312-969 (LX) IOT Center Tray Full 2-157
312-976 (LX) Staple Fail 2-157
312-977 (LX) Staple Ready Fail 2-158
312-979 (LX) Stapler near empty 2-158
312-982 (LX) Stacker Lower Safety Warning 2-159

Chain 313 Finisher (LX)

313-210 (LX) Booklet Staple Move Home Sensor ON RAP 2-161
313-211 (LX) Booklet Staple Move Home Sensor OFF 2-162
313-212 (LX) Booklet Staple Move Position Sensor On Fault 2-163
313-213 (LX) Booklet Staple Move Position Sensor Off Fault 2-164
313-220 (LX) Booklet Creaser Detect Fault 2-165
313-306 (LX) Booklet Safety Switches Open 2-165
313-307 (LX) Booklet Cover Open 2-166

Chain 313 Finisher (PRO)

313-902 Paper remains at Booklet Compiler No Paper Sensor 2-167
313-903 Paper remains at Booklet Folder Roll Exit Sensor 2-167

Chain 316 Controller

316-XXX Controller Faults Entry RAP 2-169
316-1 RAP 2-173
316-2 RAP 2-174
316-3 RAP 2-174
316-4 RAP 2-175

Chain 319 Image Processing

319-300 RAP 2-177
319-301 RAP 2-177
319-302 RAP 2-178
319-303 RAP 2-178
319-310 RAP 2-179
319-401 RAP 2-179
319-402 RAP 2-180
319-403 RAP 2-180
319-404 RAP 2-181
319-405 RAP 2-181
319-406 RAP 2-182
319-409 RAP 2-182
319-410-00 RAP 2-183
319-410-01 RAP 2-183
319-410-2 RAP 2-184
319-410-3 RAP 2-184
319-410-4 RAP 2-185
319-410-5 RAP 2-185
319-410-6 RAP 2-186
319-410-7 RAP 2-186
319-410-8 RAP 2-187
319-410-9 RAP 2-187
319-410-10 RAP 2-188
319-410-11 RAP 2-188
319-410-12 RAP 2-189
319-410-13 RAP 2-189
319-750 RAP 2-190

319-752 RAP 2-190
319-754 RAP 2-191
319-760 RAP 2-191

Chain 320 Imbedded Fax

320-302 RAP 2-193
320-303 RAP 2-193
320-305 RAP 2-194
320-320 RAP 2-194
320-322 RAP 2-195
320-323 RAP 2-195
320-324 RAP 2-196
320-327 RAP 2-196
320-331 RAP 2-197
320-332 RAP 2-197
320-338 RAP Fax Communication Fault 2-198
320-339 RAP 2-198
320-340 RAP 2-199
320-341 RAP 2-199
320-342 RAP 2-200
320-701 RAP 2-200

Chain 322 System Faults

322-300-05 RAP 2-201
322-300-10 RAP 2-201
322-300-16 RAP 2-202
322-301 RAP 2-202
322-309 RAP 2-203
322-310 RAP 2-203
322-311 RAP 2-204
322-315 RAP 2-204
322-316 RAP 2-205
322-317 RAP 2-205
322-318 RAP 2-206
322-320 RAP 2-206
322-321 RAP 2-207
322-321-04 RAP 2-207
322-322 RAP 2-208
322-323 RAP 2-208
322-324 RAP 2-209
322-325 RAP 2-209
322-326 RAP 2-210
322-327 RAP 2-210
322-330-01 RAP 2-211
322-330-02 RAP 2-211
322-330-03 RAP 2-212
322-330-04 RAP 2-212
322-330-05 RAP 2-213
322-330-06 RAP 2-213
322-335 RAP 2-214
322-336 RAP 2-214
322-337 RAP 2-215
322-338 RAP 2-215
322-339 RAP 2-216
322-340 RAP 2-216
322-350-1 RAP 2-217
322-350-2 RAP 2-217
322-351-1 RAP 2-218
322-351-2 RAP 2-218
322-351-3 RAP 2-219
322-352 RAP 2-219
322-352-1 RAP 2-221
322-370 RAP 2-221
322-372 RAP 2-222
322-407 RAP 2-222
322-417 RAP 2-223
322-419 RAP 2-223
322-421 RAP 2-224
322-701-04 RAP 2-224
322-750-04 RAP 2-225
322-750-17 RAP 2-225
322-751-04 RAP 2-226
322-754-17 RAP 2-226
322-755-17 RAP 2-227

Chain 341

341-316 IH Driver Interface Fault 2-229
341-317 MCU IH Interface Fault 2-229
341-325 MCU PWB F2 Open 2-230
341-326 MCU PWB F3 Open 2-230
341-327 MCU PWB F4 Open 2-231
341-328 MCU PWB F5 Open 2-231
341-340 MCU NVM (EEPROM) Data Fault 2-232
341-341 MCU NVM (EEPROM) Access Fault 2-232
341-342 MCU NVM (EEPROM) Buffer Fault 2-233
341-343 IM Logic Fault 2-233
341-345 MD PWB F2 Open 2-234
341-346 (7525/30/35) MD PWB F3 Open 2-234
341-347 Serial I/O Fault 2-235
341-348 (7545/56) MD PWB F4 Open 2-235
341-349 MD PWB F6 Open 2-236
341-350 MD PWB F7 Open 2-236
341-351 MD Detect Fault 2-237
341-352 (Int) MD PWB F5 Open 2-237
341-353 MD PWB F8 Open 2-238
341-354 MD PWB F9 Open 2-238
341-355 MD PWB F10 Open 2-239
341-356 MD PWB F11 Open 2-239
341-357 MD PWB F12 Open 2-240
341-358 MD PWB F13 Open 2-240
341-359 MD PWB F14 Open 2-241
341-360 MD PWB F15 Open 2-241
341-361 MD PWB F16 Open 2-242
341-368 MCU-SW Firmware Mismatch 2-242

341-369 MD Type Mismatch 2-243
341-371 Fault 2-243

Chain 342

342-319 (7525/30/35) Drum Y, M, C Motor Fail 2-245
342-319 (7545/56) Drum Y, M, C Motor Fail 2-245
342-323 Drum K Motor Fail 2-246
342-324 IBT Motor Fail 2-247
342-325 Main Motor Fail 2-247
342-326 1st BTR Contact/Retract Fault 2-248
342-330 IH Exhaust Fan Fail 2-249
342-332 IH Intake Fan Fail 2-249
342-334 (7525/30/35) IBT Fan Fail 2-250
342-335 (7545/56) Process 1 Fan Fail 2-250
342-336 Process 2 Fan Fail 2-251
342-337 NOHAD Logic Fail 2-251
342-338 LVPS Front Fan Fail 2-252
342-340 (7545/56) Cartridge Fan Fail 2-252
342-341 M HVPS Fan Fail 2-253
342-342 (7545/56) Suction Fan Fail 2-253
342-343 (7525/30/35/7545/56) Rear Bottom Fan Fail 2-254
342-400 Deodorant Filter Life End 2-254
342-604 NOHAD Temperature Sensor Fail 2-255
342-605 (7525/30/35) Suction Drive Fan Fail 2-255
342-609 (7545/56) LH Fan Fail 2-256
342-615 (7545/56) C Exhaust Fan Fail 2-257

Chain 345

345-310 Image Ready NG 2-259
345-311 Controller Communication Fault 2-259
345-312 Drive Logic Fault 2-260
345-313 ENG_LOGIC_FAIL 2-260
345-321 MK_Panel_NG 2-261
345-322 MK_Pitch_NG 2-261
345-331 MK_MKIF_MSG_Reject 2-262
345-332 MK_MMIF_MSG_Reject 2-262
345-350 MK_Emergency_Over_Wait 2-263
345-351 MK_Emergency_No_Timer 2-263
345-352 MK_Emergency_Enforced_Stop 2-264
345-370 LPH Power On Fault Multi 2-264
345-371 LPH Download Data Fault Multi 2-265
345-372 LPH Mismatch Fault Multi 2-265
345-373 LPH Read Fault Multi 2-266
345-374 LPH Write Fault Multi 2-266
345-375 LPH Act Fault Multi 2-267
345-376 LPH PLL Lock Fault Multi 2-268

Chain 347

347-211 Exit 1 OCT Home Fault 2-269
347-212 Exit 2 OCT Home Fault 2-269
347-213 Finisher Type Mismatch 2-270
347-310 Finisher Communication Fault 2-270
347-320 ALL Destination Tray Broken 2-271

Chain 361

361-350 LPH Power On Fault Y 2-273
361-351 LPH Power On Fault M 2-273
361-352 LPH Power On Fault C 2-274
361-353 LPH Power On Fault K 2-274
361-354 LPH Download Data Fault Y 2-275
361-355 LPH Download Data Fault M 2-275
361-356 LPH Download Data Fault C 2-276
361-357 LPH Download Data Fault K 2-276
361-358 LPH Mismatch Fault Y 2-277
361-359 LPH Mismatch Fault M 2-277
361-360 LPH Mismatch Fault C 2-278
361-361 LPH Mismatch Fault K 2-278
361-362 LPH Read Fault Y 2-279
361-363 LPH Read Fault M 2-279
361-364 LPH Read Fault C 2-280
361-365 LPH Read Fault K 2-280
361-366 LPH Write Fault Y 2-281
361-367 LPH Write Fault M 2-281
361-368 LPH Write Fault C 2-282
361-369 LPH Write Fault K 2-282
361-370 LPH Act Fault Y 2-283
361-371 LPH Act Fault M 2-283
361-372 LPH Act Fault C 2-284
361-373 LPH Act Fault K 2-284
361-374 LPH Chip Fault Y 2-285
361-375 LPH Chip Fault M 2-285
361-376 LPH Chip Fault C 2-286
361-377 LPH Chip Fault K 2-286
361-378 LPH Ltrg Fault Y 2-287
361-379 LPH Ltrg Fault M 2-287
361-384 LPH Ltrg Fault C 2-288
361-385 LPH Ltrg Fault K 2-288
361-386 LPH PLL Lock Fault Y 2-289
361-387 LPH PLL Lock Fault M 2-289
361-388 LPH PLL Lock Fault C 2-290
361-389 LPH PLL Lock Fault K 2-290
361-390 LPH FFC Connect Posi Fault Y 2-291
361-391 LPH FFC Connect Posi Fault M 2-291
361-392 LPH FFC Connect Posi Fault C 2-292
361-393 LPH FFC Connect Posi Fault K 2-292
361-394 LPH FFC Connect Nega Fault Y 2-293
361-395 LPH FFC Connect Nega Fault M 2-293
361-396 LPH FFC Connect Nega Fault C 2-294
361-397 LPH FFC Connect Nega Fault K 2-294
361-398 BITZ1 Initialize Fault 2-295
361-399 BITZ2 Initialize Fault 2-295
361-610 Bitz1 CONTIF Fault 2-296
361-611 Bitz2 CONTIF Fault 2-296

Chain 362 IIT

362-277 IPS-DADF Communication Fault 2-297
362-300 Platen Interlock Open 2-297
362-310 IIT-SBC Communication Fault 2-298
362-311 IIT Software Logic Fault 2-298
362-342 CCD PWB Configuration Fault 2-299
362-345 IIT EEPROM Fault (IIT) 2-299
362-360 Carriage Position Fault 2-300
362-362 X Hard Fault 2-301
362-371 Lamp Illumination Fault 2-301
362-380 Platen AGC Fault 2-302
362-386 Platen AOC Fault 2-302
362-389 Carriage Over Run Fault 2-303
362-392 IIT Memory Fault 2-304
362-393 CCD PWB Sync Signal Fault 2-304
362-395 (7525/30/35) IIT PWB Power Cable Connection Fault 2-305
362-395 (7545/56) IIT PWB Power Cable Connection Fault 2-305
362-396 CCD Cable Connection Fault 2-306
362-397 IIT-Cont Video Cable Connection Fault 2-306
362-398 IIT-Cont I/O Cable Connection Fault 2-307
362-450 Calibration Dark Range Not Clear 2-307
362-451 Calibration Dark Range Not Done 2-308
362-452 Calibration Pixel Offset Not Clear 2-308
362-454 Calibration Gain Range Not Clear 2-309
362-455 Calibration Gain Range Not Done 2-309
362-457 Calibration Pixel Gain Not Done 2-310
362-458 Calibration Dark Range Errors 2-310
362-459 Calibration Pixel Offset Hi Errors 2-311
362-460 Calibration Dark Range Errors 2-311
362-461 Calibration Gain Range Errors 2-312
362-462 Calibration Pixel Gain Hi Errors 2-312
362-463 Calibration Pixel Gain Lo Errors 2-313
362-464 Scan Controller Busy Error 2-313
362-466 Dark Range Rail Error 2-314
362-467 Gain Range Rail Error 2-314
362-468 Color State Errors 2-315
362-469 Fpga Comms Error 2-315
362-471 Fpga Write Wrap Error 2-316
362-472 Fpga Bus Time Out 2-316
362-473 UART RX Wrap Error 2-317
362-474 Stepper Speed Error 2-317
362-475 Move Before Reset Error 2-318
362-476 Stepper Home Error 2-318
362-477 Stepper Busy Error 2-319
362-478 Real Time Error 2-319
362-480 Initialize Timeout 2-320
362-481 DADF Communication Timeout 2-320
362-487 System PLL Error 2-321
362-790 X-Recognition Fault 2-321

Chain 371

371-210 Tray 1 Lift Up Fault 2-323
371-212 Tray 1 Paper Size Sensor Broken 2-324
371-940 Tray 1 Lift Up NG 2-324

Chain 372

372-101 Tray 2 Misfeed 2-325
372-102 Feed Out Sensor On Jam (Tray 2) 2-326
372-108 Feed Out Sensor 2 On Jam (Tray 3/4) 2-327
372-109 Reg Sensor On Jam (Tray1/2/3/4) 2-327
372-210 Tray 2 Lift Up Fault 2-328
372-212 Tray 2 Paper Size Sensor Broken 2-329
372-900 Tray 2 Feed Out Sensor Static Jam 2-329
372-940 Tray 2 Lift Up NG 2-330

Chain 373

373-101 (7525/30/35) Tray 3 Misfeed 2-331
373-101 (7545/56) Tray 3 Misfeed 2-332
373-102 Feed Out Sensor 3 On Jam (Tray 3) 2-333
373-210 Tray 3 Lift Up Fault 2-333
373-212 Tray 3 Paper Size Sensor Broken 2-334
373-900 Tray 3 Feed Out Sensor Static Jam 2-335
373-940 Tray 3 Lift Up NG 2-335

Chain 374

374-101 (7525/30/35) Tray 4 Misfeed 2-337
374-101 (7545/56) Tray 4 Misfeed 2-338
374-103 Feed Out Sensor 3 On Jam (Tray 4) 2-339
374-210 Tray 4 Lift Up Fault 2-339
374-212 Tray 4 Paper Size Sensor Broken 2-340
374-900 Tray 4 Feed Out Sensor Static Jam 2-341
374-940 Tray 4 Lift Up NG 2-341

Chain 375

375-100 Tray 5 (MSI) Misfeed 2-343
375-103 Tray 5 Feed Out Sensor Off Jam 2-344
375-135 Reg Sensor On Jam (Tray 5) 2-344
375-212 Tray 5 Nudger Up/Down Fault 2-345

Chain 377

377-103 Fuser Exit Sensor Off Jam 2-347
377-104 Fuser Exit Sensor Off Jam (Too Short) 2-347
377-105 Exit Sensor 2 Off Jam 2-348
377-106 Fuser Exit Sensor On Jam 2-348
377-130 Reg Sensor On Jam (Duplex Direct) 2-349
377-131 Duplex Wait Sensor On Jam 2-350
377-200 POB Sensor On Jam 2-350
377-201 Reg Sensor Off Jam 2-351
377-202 Fuser Exit Sensor On Jam 2-352
377-203 Exit Sensor 2 On Jam 2-353
377-204 Fuser Exit Sensor Off Jam 2-353
377-205 Fuser Exit Sensor Off Jam (Too Short) 2-354
377-211 Tray Module Kind Mismatch 2-354
377-212 Tray Module Reset Fault 2-355
377-214 Tray Module Logic Fault 2-355

377-215 Tray Module Communication Fault 2-356
377-300 Front Cover Interlock Open 2-356
377-301 L/H Cover Interlock Open 2-357
377-305 Tray Module L/H Cover Open 2-357
377-307 Duplex Cover Open 2-358
377-308 L/H High Cover Open 2-358
377-312 Feeder Communication Fault 2-359
377-315 Tray Module L/H Cover Open 2-359
377-316 P/H Module Logic Fault 2-360
377-320 All Feed Tray Broken 2-360
377-602 Transparency Sensor Fault 2-361
377-900 Reg Sensor Static Jam 2-361
377-901 Exit Sensor 1 Static Jam 2-362
377-902 Exit Sensor 2 Static Jam 2-362
377-903 POB Sensor Static Jam 2-363
377-907 Duplex Wait Sensor Static Jam 2-363

Chain 378

378-101 HCF to Feed Out Sensor Fault RAP 2-365
378-102 HCF to Registration Sensor Fault RAP 2-366
378-151 HCF Feed Out Sensor Fault RAP 2-367
378-210 Tray 3 (TTM) Lift Failure RAP 2-368
378-211 Tray 4 (TTM) Lift Failure RAP 2-369
378-213 Finisher Type Mismatch 2-370
378-216 Logic Failure RAP 2-370
378-250 HCF Lift Fault RAP 2-371
378-300 HCF Top Cover Interlock Open RAP 2-372
378-301 HCF Docking interlock Open RAP 2-372
378-500 Download Error RAP 2-373
378-901 HCF Feed Out Sensor Static Jam RAP 2-373
378-945 TTM Tray 3 Lift RAP 2-374
378-946 TTM Tray 4 Lift RAP 2-375

Chain 389

389-600 RC Sample Lateral Fail-A1 2-377
389-601 RC Sample Block Fail-A1-In 2-377
389-603 RC Sample Block Fail-A1-Out 2-378
389-604 RC Sample Block Fail-B-#1-In 2-378
389-606 RC Sample Block Fail-B-#1-Out 2-379
389-607 RC Sample Block Fail-B-#2-In 2-380
389-609 RC Sample Block Fail-B-#2-Out 2-381
389-610 RC Sample Block Fail-B-#3-In 2-382
389-612 RC Sample Block Fail-B-#3-Out 2-383
389-613 RC Sample Block Fail-B-#4-In 2-384
389-615 RC Sample Block Fail-B-#4-Out 2-385
389-616 RC Data Over Flow Fail 2-386
389-617 RC Lead Regi Over Range Fail 2-387
389-622 RC Data Linearity Fail 2-388
389-625 RC Data Linearity Fail Y 2-388
389-626 RC Data Linearity Fail M 2-389
389-627 RC Data Linearity Fail C 2-389
389-628 RC Data Linearity Fail K 2-390

Chain 391

391-313 CRUM ASIC Communication Fault 2-391
391-400 Waste Toner Bottle Near Full 2-391
391-401 Drum Cartridge K Near Life 2-392
391-402 Drum Cartridge K Life Over 2-392
391-411 Drum Cartridge Y Near Life 2-393
391-421 Drum Cartridge M Near Life 2-393
391-431 Drum Cartridge C Near Life 2-394
391-480 Drum Cartridge Y Life Over 2-394
391-481 Drum Cartridge M Life Over 2-395
391-482 Drum Cartridge C Life Over 2-395
391-910 Waste Toner Bottle Not In Position 2-396
391-911 Waste Toner Bottle Full 2-396
391-913 Drum Cartridge K Life End 2-397
391-914 Drum CRUM K Communication Fault 2-397
391-915 Drum CRUM K Data Broken 2-398
391-916 Drum CRUM K Data Mismatch 2-398
391-917 Drum CRUM Y Communication Fault 2-399
391-918 Drum CRUM M Communication Fault 2-399
391-919 Drum CRUM C Communication Fault 2-400
391-920 Drum CRUM Y Data Broken 2-400
391-921 Drum CRUM K Not In Position 2-401
391-922 Drum CRUM M Data Broken 2-401
391-923 Drum CRUM C Data Broken 2-402
391-924 Drum CRUM Y Data Mismatch 2-402
391-925 Drum CRUM M Data Mismatch 2-403
391-926 Drum CRUM C Data Mismatch 2-403
391-927 Drum CRUM Y Not In Position 2-404
391-928 Drum CRUM M Not In Position 2-404
391-929 Drum CRUM C Not In Position 2-405

Chain 392

392-312 ATC Fault [Y] 2-407
392-313 ATC Fault [M] 2-407
392-314 ATC Fault [C] 2-408
392-315 ATC Fault [K] 2-408
392-649 ADC Shutter Open Fault 2-409
392-650 ADC Shutter Close Fault 2-409
392-651 ADC Sensor Fault 2-410
392-653 ATC Average Fault [Y] 2-410
392-654 ATC Average Fault [M] 2-411
392-655 ATC Average Fault [C] 2-411
392-656 ATC Average Fault [K] 2-412
392-657 ATC Amplitude Fault [Y] 2-412
392-658 ATC Amplitude Fault [M] 2-413
392-659 ATC Amplitude Fault [C] 2-413
392-660 ATC Amplitude Fault [K] 2-414
392-661 Temperature Sensor Fault 2-414
392-662 Humidity Sensor Fault 2-415
392-670 ADC Patch Fault [Y] 2-415
392-671 ADC Patch Fault [M] 2-416
392-672 ADC Patch Fault [C] 2-416

392-673 ADC Patch Fault [K] 2-417
392-675 ADC Mini Setup Fault [Y] 2-417
392-676 ADC Mini Setup Fault [M] 2-418
392-677 ADC Mini Setup Fault [C] 2-418
392-678 ADC Mini Setup Fault [K] 2-419

Chain 393

393-314 Y Disp Motor Fault 2-421
393-315 M Disp Motor Fault 2-421
393-316 C Disp Motor Fault 2-422
393-317 K Disp Motor Fault 2-422
393-320 (7545/56) Dev Y, M, C Motor Fault 2-423
393-400 Y Toner Cartridge Near Empty RAP 2-423
393-423 M Toner Cartridge Near Empty RAP 2-424
393-424 C Toner Cartridge Near Empty RAP 2-424
393-425 K Toner Cartridge Near Empty RAP 2-425
393-912 K Toner Cartridge Empty 2-425
393-924 Toner K CRUM Communication Fault 2-426
393-925 Toner K CRUM Data Broken Fault 2-426
393-926 Toner K CRUM Data Mismatch Fault 2-427
393-927 Toner Y CRUM Communication Fault 2-428
393-928 Toner M CRUM Communication Fault 2-429
393-929 Toner C CRUM Communication Fault 2-429
393-933 Toner Y CRUM Data Broken Fault 2-430
393-934 Toner M CRUM Data Broken Fault 2-430
393-935 Toner C CRUM Data Broken Fault 2-431
393-937 Toner Y CRUM Data Mismatch Fault 2-431
393-938 Toner M CRUM Data Mismatch Fault 2-432
393-939 Toner C CRUM Data Mismatch Fault 2-433
393-970 Toner Y CRUM Not In Position 2-434
393-971 Toner M CRUM Not In Position 2-435
393-972 Toner C CRUM Not In Position 2-435
393-973 Toner K CRUM Not In Position 2-436

Chain 394

394-120 1st BTR Contact/Retract Fault 2-437
394-300 IBT Front Cover Open 2-437
394-325 2nd BTR Contact/Retract Fault 2-438
394-417 IBT Unit Near End Warning 2-438
394-418 IBT CLN Unit Near End Warning 2-439
394-419 2nd BTR Unit Near End Warning 2-439
394-420 IBT Unit End Warning 2-440
394-421 IBT CLN Unit End Warning 2-440
394-422 2nd BTR Unit End Warning 2-441

Other Faults

AC Power RAP 2-443
STBY +5VDC Power RAP 2-443
+5VDC Power RAP 2-444
+24VDC Power RAP (7525/30/35) 2-444
+24VDC Power RAP (7545/56) 2-445
Machine Not Ready RAP 2-445
Toner CRUM Mismatch RAP 2-446
USB Port Disabled 2-447
No-Run RAP 2-447
Xerographic Messages RAP 2-448
OF 3.3 Power On Self Test (POST) RAP 2-448
OF 16-1 Network Printing Problems Entry RAP 2-451
OF 16-2 Novell Netware Checkout RAP 2-452
OF 16-3 TCP/IP Checkout RAP 2-453
OF 16-4 AppleTalk Checkout RAP 2-455
OF 16-5 NETBIOS Checkout RAP 2-456
OF 16-8 Problem Printing Job RAP 2-457
OF 16-9 Job Prints Incorrectly RAP 2-457
OF 17-1 FAX Entry RAP 2-458
OF 18-1 Secure Access RAP 2-459
OF 99-1 Reflective Sensor RAP 2-461
OF 99-2 Transmissive Sensor 2-462
OF 99-3 Switch 2-463
OF 99-4 Generic Solenoid/Clutch RAP 2-464
OF 99-6 2 Wire Motor Open 2-465
OF 99-7 2 Wire Motor On 2-465
OF 99-8 Set Gate Solenoid Open 2-466
OF 99-9 Multiple Wire Motor 2-466

302-315 RAP

Service Registry Bad data / Corrupted

Procedure

Power OFF and then ON.

302-316 RAP

SRS returns to LUI “invalid fields, invalid data, or missing data”

Procedure

Power OFF and then ON.

302-317 RAP

LUI gets no response from SRS

Procedure

Power OFF and then ON.

302-321 RAP

XEIP Browser Dead

NOTE: *Set by the XUI when the XEIP browser does not respond or is known to be dead.*

Procedure

Reload software via AltBoot (GP 9).

303-306 RAP

Downgrade not permitted. A Customer upgrade was attempted, which would result in a downgrade, which is not allowed.

Procedure

If a downgrade is required by the customer perform the downgrade using GP 9. If not, switch off and then switch on the machine.

303-307 RAP

SW Upgrade Synchronization Failure. Customer or CSE tried to perform upgrade resulting in a SW Upgrade Synchronization problem.

Procedure

Check connections and cables and perform Software Upgrade again using GP 9.

303-316 RAP

Controller cannot communicate with IOT.

The scanner and copier are disabled but printing is operational.

Initial Actions

Enter the diagnostic mode dC131, and change the NVM setting in the following location (CCS: SWUP NVM Save Switch):

[616-116] = 2

Procedure

Switch the power off then on. If the problem continues, perform GP 9.

Inspect the MD PWB and the MCU PWB for loose connections or any obvious electrical/mechanical cause for malfunction. Clean, reseat or replace as required. If this does not resolve the problem:

- Replace the MCU PWB (PL 18.2A -7525/30/35, PL 18.2B - 7545/56)
- Replace the SBC PWB (PL 35.2

303-317 RAP

IOT NVM Save Failure

Procedure

Switch the power off then on. **Fault Code 03-317 is still declared.**

Y **N**

If intermittent performance is suspected, inspect the MCU PWB, SBC PWB and SBC NVM PWB for loose connections or any obvious electrical/mechanical cause for malfunction.

This fault can be caused by IOT software corruption or a software version mismatch between the IOT module and the rest of the software:

- If the fault occurred after replacing the MCU PWB, it is probably a software mismatch; perform a Software Upgrade (GP 9).

  If the fault is unrelated to MCU replacement it may be corrupt software; perform a Forced Upgrade.

If this does not resolve the problem, Replace the MCU PWB (PL 18.2A -7525/30/35, PL 18.2B - 7545/56). If the problem still exists replace the SBC PWB (PL 35.2).

303-318 RAP

IOT NVM Init Failure

Initial Actions

- Disconnect any Foreign Interface devices.
- Obtain all of the following information:
  - Saved Machine Settings, if possible.
  - NVM value factory setting report (typically it is located in the Tray 1 pocket)
  - Any customer setting Auditron account from the system administrator
  - Any setting changes (specifically NVM settings) shown on the machine's service log.
  - Any customer settings in the Tools mode.
- If possible, save Critical NVM (dC361).

Procedure

Perform dC301 NVM Initialization for the IOT.

After the initialization is complete, use the data accumulated in **Initial Actions** to restore the machine to its previous configuration.

303-319 RAP

IOT NVM Restore Failure

Procedure

Perform dC361 NVM Restore for the IOT Critical NVM.

303-320 RAP

Incompatible Product Type. SW Upgrade Aborted due to incompatible product type - software set does not match hardware.

Procedure

Perform GP 9 Software Upgrade with the correct Software module or select the correct .dlm file using the Web UI to upgrade the machine.

303-324 RAP

SW Upgrade File Transfer failure

Procedure

Check connections and cables and retry GP 9 Software Upgrade.

303-325 RAP

System detects that the Wall Clock has not incremented within 1.5 seconds during Power On.

Procedure

Power OFF and then ON.

If the problem continues, call service support for assistance.

303-326 RAP

Upgrade not required, since the SW Upgrade version is the same as the SW version on the machine.

Procedure

If a software reinstallation is required, perform GP 9 Forced.

303-327 RAP

Upgrade Failed. this problem could be caused by an internal timing issue (Front side BUS speed set incorrectly), hardware error, user error and others.

Initial Actions

Check connections and reseat PWBs on SBC PWB and attempt another upgrade using GP 9 forced upgrade for the system or platform that failed.

Procedure

The problem is still present:

Y **N**

Return to Service Call Procedures.

Call service support for assistance.

303-329 RAP

Upgrade request received during active diagnostics.

Procedure

Exit Diagnostics and perform GP 9 Software Upgrade.

303-330 RAP

Upgrade request received during active Security function.

Procedure

Wait until Security function (Image Overwrite) is completed and perform GP 9 Software Upgrade.

303-332 RAP

CCS unable to reestablish communication with the Network Controller for 12 minutes. This problem could be caused by loose connections or improperly seated PWBs.

Procedure

Reseat PWBs on the SBC (Riser PWB, Fax PWB (if installed) and Memory PWBs). **The problem continues.**

Y **N**

Return to Service Call Procedures.

Go to the Boot Failure RAP.

303-338 RAP

CCS has been reset; either the watch dog timer timed out or the application SW wrote to an illegal address.

Initial Actions

Check that the customer does not have another device configured with the same IP address.

Procedure

Switch the power off then on.

Perform dC361 to restore NVM.

If the problem continues, perform GP 9 SW upgrade.

303-346 RAP

The SBC is unable to reestablish communication with the UI after 30 seconds.

Procedure

Go to the 303-347 RAP.

303-347 RAP

BSD-ON: BSD 3.4 PWB Communication (4 of 7)

The SBC cannot communicate with UI PWB.

If communication is not reestablished within 30 seconds, fault code 03-346 will be declared.

NOTE: *The UI will not display this fault because of the communication problem with the SBC PWB. This fault can be viewed only with the PWS.*

Procedure

NOTE: *This fault can occur if the UI software version is not compatible with the SBC software version.*

Perform GP 9. If the problem persists, go to the Boot Failure RAP.

303-355 RAP

Power On Self-Test failure detected during the NVM Integrity Test; NVM battery dead

Procedure

The SBC NVM battery may be loose, failing, or has failed. Reseat the SBC NVM PWB battery. If the problem continues, go to REP 1.11 to replace the SBC NVM PWB.

303-380 RAP

BSD-ON: **BSD 3.5 PWB Communication (5 of 7)**

PWBA is missing or disconnected.

Procedure

Check the connectors between the SBC and the IIT/IPS PWBs.

Power OFF and then ON.

If the problem continues, call service support for assistance.

303-390 RAP

Upgrade Automation failed

Procedure

Call service support for assistance.

303-398 RAP

SIM Card serial number mismatch. The number recorded on the SIM Card does not match the machine serial number. The first time a SIM is used in a machine the Serial number of the machine is written to the SIM.

Procedure

NOTE: *If the problem surfaced after a PWB replacement that required serialization, make sure the serialization was performed correctly (dC132). If the machine is not serialized correctly this could be the cause of the SIM problem.*

The SIM belongs to another machine and will not work in the machine it is being tried on. Try a new SIM, of the same type, to install the feature(s) on the machine. If the problem still exists after using the new SIM, call service support for assistance.

303-399 RAP

SIM Card data cannot be processed

Procedure

Check the configuration page. If the option is listed as" installed/not enabled," use the **Tools** menu (see GP 2) to enable.

If the SIMs are not available, contact the Sales Rep. and ensure the feature was ordered by verifying the paperwork with the CBR.

If the feature was ordered, a replacement part can be ordered from the Parts List. If it was not ordered, the Sales Rep. should order the SIM/feature using the correct Sales Order Number.

If the problem still occurs with new SIMs, replace the SBC PWB (PL 35.2).

303-401 RAP

Basic FAX not detected/confirmed

Procedure

Reset the Main Controller or Switch the power off then on. If the problem continues, go to the OF 17-1 FAX Entry RAP.

303-403 RAP

Extended FAX not detected/confirmed

Procedure

Reset the Main Controller or Switch the power off then on. If the problem continues, go to the OF 17-1 FAX Entry RAP.

303-417 RAP

Incompatible FAX software detected at power on

Procedure

Reset the Main Controller or Switch the power off then on. If the problem continues, reload FAX software (GP 9).

303-777 RAP

Input Power loss detected or software corruption.

Procedure

1. Verify customer power outlet voltage is correct.
2. Check for software version 061.121.201.09700 or higher; reload current IOT software or perform an upgrade, as necessary (GP 9).

303-788 RAP

CCS Runtime could not enter power saver mode S3.

NOTE: *The CC USB could not re-enumerate the UI panel coming out of sleep, which keeps parts of the system in power saver mode S3 and parts awake. This prevents system entry into power saver mode S3 at the next attempt to do so.*

Procedure

Switch the power off then on to allow system to enter power save.

303-790 RAP

Timezone file cannot be set. At power up, the timezone setting is not valid due to NVM corruption, or OS file system problem. Time Zone overridden to GMT: DST Disabled.

Procedure

Switch the power off then on.

Perform dC361 to restore NVM.

If the problem continues, perform GP 9 SW upgrade.

305-121 DADF Feed Out Sensor On Jam

BSD-ON:BSD 5.5 Document Feed (2 of 2)

After feeding started (DADF Feed Motor On (CW)) in Duplex, the DADF Feed Out Sensor did not turn ON within the specified time.

NOTE: *When turning the power OFF, turn OFF the Power Switch first and then the Main Power Switch.*

Procedure

Remove the DADF Rear Cover and open the Top Cover.
Enter the Diag Mode, turn ON DC330 [005-205]. Activate the Actuator of the DADF Feed Out Sensor manually. **Does the display change between High/Low?**

Y N

Disconnect the DADF Feed Out Sensor connector J772. **Is High displayed?**

Y N

Check the wire between the DADF Feed Out Sensor J772-2 and the DADF PWB J757-5 for a short circuit. If no problems are found, replace the DADF PWB (PL 51.2).

Is the voltage between J772-1 (+) and J772-3 (-) +5VDC?

Y N

Check the wires between the DADF PWB J757-6 and the DADF Feed Out Sensor J772-1, as well as between the DADF PWB J757-4 and the DADF Feed Out Sensor J772-3 for open circuits and poor contacts.

Replace the DADF Feed Out Sensor (PL 51.9).

Press the Stop button.
Turn ON DC330 [005-019] (DADF Feed Motor). **Does the DADF Feed Motor operate?**

Y N

Is the voltage between the DADF Feed Motor J776-5/2 (+) and the GND (-) +24VDC?

Y N

Is the voltage between the DADF PWB J754-B1/B2 (+) and the GND (-) +24VDC?

Y N

Is the voltage between the DADF PWB J753-2 (+) and the GND (-) +24VDC?

Y N

Refer to BSD Chain 5 BSDs and check the +24VDC circuit to the DADF PWB J753-2.

Replace the DADF PWB (PL 51.2).

Check the wires between the DADF PWB J754-B1 and the DADF Feed Motor J776-5, as well as between the DADF PWB J754-B2 and the DADF Feed Motor J776-2 for an open circuit and poor contact.

Turn the power OFF and disconnect J754 from the DADF PWB.
Measure the wire wound resistance of the Motor.

- Between J754 pin-B1 and J754 pin-B3/B4

A

- Between J754 pin-B2 and J754 pin-B5/B6

Is the resistance approx. 1Ohm for each?

Y N

Replace the DADF Feed Motor (PL 51.5).

Replace the DADF PWB (PL 51.2).

Check the following:

- The document path for foreign substances.
- The DADF Feed/Nudger Roll for contamination, wear or revolution failure.
- The DADF Feed Out Sensor Actuator for disengagement, drag and damage.

A

305-122 DADF Simplex/Side 1 Pre Reg Sensor On Jam

BSD-ON:BSD 5.5 Document Feed (2 of 2)

- After Pre-Feed started for the first sheet (DADF Feed Motor On (CW)) in Simplex and Duplex, the DADF Pre Reg Sensor did not turn ON within the specified time.
- After Pre-Feed started for the second sheet onwards (DADF Feed Motor On (CW)) in Duplex, the DADF Pre Reg Sensor did not turn ON within the specified time.

NOTE: *When turning the power OFF, turn OFF the Power Switch first and then the Main Power Switch.*

Procedure

Open the Top Cover and remove the Invert Chute.

Enter the Diag Mode, turn ON DC330 [005-206]. Block the DADF Pre Reg Sensor using a sheet of paper, etc. **Does the display change to High?**

Y N

Disconnect the DADF Pre Reg Sensor connector J774. **Does the display change to High?**

Y N

Check the wire between the DADF Pre Reg Sensor J774-2 and the DADF PWB J757-11 for a short circuit. If no problems are found, replace the DADF PWB (PL 51.2).

Is the voltage between J774-1 (+) and J774-3 (-) +5VDC?

Y N

Check the wires between the DADF PWB J757-12 and the DADF Pre Reg Sensor J774-1, as well as between the DADF PWB J757-10 and the DADF Pre Reg Sensor J774-3 for open circuits and poor contacts.

Replace the DADF Pre Reg Sensor (PL 51.17).

Press the Stop button.

Turn ON DC330 [005-019] (DADF Feed Motor). **Does the DADF Feed Motor operate?**

Y N

Is the voltage between the DADF Feed Motor J776-5/2 (+) and the GND (-) +24VDC?

Y N

Is the voltage between the DADF PWB J754-B1/B2 (+) and the GND (-) +24VDC?

Y N

Is the voltage between the DADF PWB J753-2 (+) and the GND (-) +24VDC?

Y N

Refer to BSD Chain 5 BSDs and check the +24VDC circuit to the DADF PWB J753-2.

Replace the DADF PWB (PL 51.2).

Check the wires between the DADF PWB J754-B1 and the DADF Feed Motor J776-5, as well as between the DADF PWB J754-B2 and the DADF Feed Motor J776-2 for an open circuit and poor contact.

A B

A B

Turn the power OFF and disconnect J754 from the DADF PWB.

Measure the wire wound resistance of the Motor.

- Between J754 pin-B1 and J754 pin-B3/B4
- Between J754 pin-B2 and J754 pin-B5/B6

Is the resistance approx. 1Ohm for each?

Y N

Replace the DADF Feed Motor (PL 51.5).

Replace the DADF PWB (PL 51.2).

Check the following:

- The document path for foreign substances.
- Overly strong Retard pressure.
- The DADF Pre Reg Sensor Actuator for disengagement, drag and damage.

305-123 DADF Simplex/Side 1 Reg Sensor On Jam

BSD-ON:BSD 5.6 Document Scan and Invert

After Pre Reg operation started (DADF Feed Motor On (CCW)), the DADF Reg Sensor did not turn ON within the specified time.

NOTE: *When turning the power OFF, turn OFF the Power Switch first and then the Main Power Switch.*

Procedure

Open the Top Cover and remove the Invert Chute.

Enter the Diag Mode, turn ON DC330 [005-110]. Turn ON the DADF Reg Sensor using a sheet of paper, etc. **Does the display change to "H" (opposite to the voltage level)?**

Y N

Remove the DADF Rear Cover. **Is the voltage between the DADF PWB J757-14 (+) and the GND (-) +5VDC?**

Y N

Replace the DADF PWB (PL 51.2).

Is the voltage between the DADF Reg Sensor J775-2 (+) and the GND (-) +5VDC?

Y N

Check the connection between the DADF Reg Sensor J775-2 and the DADF PWB J757-14 for an open circuit and poor contact.

Is the voltage between the DADF Reg Sensor J775-1 (+) and J775-3 (-) +5VDC?

Y N

Check the wires between the DADF PWB J757-15 and the DADF Reg Sensor J775-1, as well as between the DADF PWB J757-13 and the DADF Reg Sensor J775-3 for open circuits and poor contacts.

Replace the DADF Reg Sensor (PL 51.17).

Press the Stop button.

Turn ON DC330 [005-017] (DADF Feed Motor). **Does the DADF Feed Motor operate?**

Y N

Is the voltage between the DADF Feed Motor J776-5/2 (+) and the GND (-) +24VDC?

Y N

Is the voltage between the DADF PWB J754-B1/B2 (+) and the GND (-) +24VDC?

Y N

Is the voltage between the DADF PWB J753-2 (+) and the GND (-) +24VDC?

Y N

Refer to BSD Chain 5 BSDs and check the +24VDC circuit to the DADF PWB J753-2.

Replace the DADF PWB (PL 51.2).

A B C

Check the wires between the DADF PWB J754-B1 and the DADF Feed Motor J776-5, as well as between the DADF PWB J754-B2 and the DADF Feed Motor J776-2 for an open circuit and poor contact.

Turn the power OFF and disconnect J754 from the DADF PWB.

Measure the wire wound resistance of the Motor.

- Between J754 pin-B1 and J754 pin-B3/B4
- Between J754 pin-B2 and J754 pin-B5/B6

Is the resistance approx. 1Ohm for each?

Y N

Replace the DADF Feed Motor (PL 51.5).

Replace the DADF PWB (PL 51.2).

Check the following:

- The document path for foreign substances.
- The Transportation Roll for contamination, wear or revolution failure.

305-125 DADF Reg Sensor Off Jam

BSD-ON:BSD 5.5 Document Feed (2 of 2)

BSD-ON:BSD 5.6 Document Scan and Invert

After the DADF Pre Reg Sensor turned OFF, the DADF Reg Sensor did not turn OFF within the specified time.

NOTE: *When turning the power OFF, turn OFF the Power Switch first and then the Main Power Switch.*

Cause/Action

Check the following:

- Transportation failure due to foreign substance in the document path
- The surface of the roll for foreign substance
- The surface of the roll for wear
- DADF Feed Motor: DC330 [005-017] (PL 51.5)
- DADF Reg Motor: DC330 [005-038] (PL 51.5)
- Check the circuit between the DADF Reg Sensor and the DADF PWB
- Check the circuit between the DADF Pre Reg Sensor and the DADF PWB (BSD 5.5 Document Feed (2 of 2).
- DADF Reg Sensor: DC330 [005-110] (PL 51.17)
- DADF Pre Reg Sensor: DC330 [005-206] (PL 51.17)
- DADF PWB failure. (PL 51.2)

305-131 DADF Invert Sensor On Jam (During Invert)

BSD-ON:BSD 5.5 Document Feed (2 of 2)

BSD-ON:BSD 5.6 Document Scan and Invert

After the DADF Reg Sensor turned ON at Invert, the DADF Invert Sensor did not turn ON within the specified time.

NOTE: *When turning the power OFF, turn OFF the Power Switch first and then the Main Power Switch.*

Cause/Action

Check the following:

- Transportation failure due to foreign substance in the document path
- The surface of the roll for foreign substance
- The surface of the roll for wear
- DADF Reg Motor: DC330 [005-038] (PL 51.5)
- Check the circuit between the DADF Reg Sensor and the DADF PWB BSD 5.5 Document Feed (2 of 2)
- Check the circuit between the DADF Inverter Sensor and the DADF PWB
- DADF Reg Sensor: DC330 [005-110] (PL 51.17)
- DADF Invert Sensor: DC330 [005-211] (PL 51.9)
- DADF PWB failure. (PL 51.2)

305-132 DADF Invert Sensor On Jam

BSD-ON:BSD 5.6 Document Scan and Invert

After the Read Speed Control operation started (DADF Reg Motor On (CCW)), the DADF Invert Sensor did not turn ON within the specified time.

NOTE: *When turning the power OFF, turn OFF the Power Switch first and then the Main Power Switch.*

Cause/Action

Check the following:

- Transportation failure due to foreign substance in the document path
- The surface of the roll for foreign substance
- The surface of the roll for wear
- DADF Reg Motor: DC330 [005-038] (PL 51.5)
- Check the circuit between the DADF Inverter Sensor and the DADF PWB
- DADF Invert Sensor: DC330 [005-211] (PL 51.9)
- DADF PWB failure. (PL 51.2)

305-134 DADF Inverter Sensor Off Jam (During Invert)

BSD-ON:BSD 5.6 Document Scan and Invert

- After the DADF Reg Sensor turned OFF at Invert of the last document, the DADF Inverter Sensor did not turn OFF within the specified time.
- During the Invert where there is a next document, after the Read Speed Control operation started (DADF Reg Motor On (CCW)), the DADF Inverter Sensor did not turn OFF within the specified time.

NOTE: *When turning the power OFF, turn OFF the Power Switch first and then the Main Power Switch.*

Cause/Action

Check the following:

- Transportation failure due to foreign substance in the document path
- The surface of the roll for foreign substance
- The surface of the roll for wear
- DADF Reg Motor: DC330 [005-038] (PL 51.5)
- Check the circuit between the DADF Reg Sensor and the DADF PWB
- Check the circuit between the DADF Inverter Sensor and the DADF PWB
- DADF Reg Sensor: DC330 [005-110] (PL 51.17)
- DADF Invert Sensor: DC330 [005-211] (PL 51.9)
- DADF PWB failure. (PL 51.2)

305-135 DADF Side 2 Pre Reg Sensor On Jam

BSD-ON:BSD 5.5 Document Feed (2 of 2)

After the Invert operation started (DADF Reg Motor On (CW)) at Invert, the DADF Pre Reg Sensor did not turn ON within the specified time.

NOTE: *When turning the power OFF, turn OFF the Power Switch first and then the Main Power Switch.*

Cause/Action

Check the following:

- Transportation failure due to foreign substance in the document path
- The surface of the roll for foreign substance
- The surface of the roll for wear
- DADF Reg Motor: DC330 [005-038] (PL 51.5)
- Check the circuit between the DADF Pre Reg Sensor and the DADF PWB
- DADF Pre Reg Sensor: DC330 [005-206] (PL 51.17)
- DADF PWB failure. (PL 51.2)
- The Invert Gate for operation failure
- Check if the Exit Roll is nipping properly. (Including the operations of Exit Nip Release Solenoid (DC330 [005-072])) (PL 51.6)

305-136 DADF Side 2 Reg Sensor On Jam

BSD-ON:BSD 5.6 Document Scan and Invert

After the DADF Pre Reg Sensor turned ON at Invert, the DADF Reg Sensor did not turn ON within the specified time.

NOTE: *When turning the power OFF, turn OFF the Power Switch first and then the Main Power Switch.*

Cause/Action

Check the following:

- Transportation failure due to foreign substance in the document path
- The surface of the roll for foreign substance
- The surface of the roll for wear
- DADF Feed Motor: DC330 [005-017] (PL 51.5)
- Check if the Exit Roll is nipping properly. (Including the operations of Exit Nip Release Solenoid (DC330 [005-072])) (PL 51.6)
- Check the circuit between the DADF Pre Reg Sensor and the DADF PWB
- DADF Pre Reg Sensor: DC330 [005-206] (PL 51.17)
- Check the circuit between the DADF Reg Sensor and the DADF PWB
- DADF Reg Sensor: DC330 [005-110] (PL 51.17)
- DADF PWB failure. (PL 51.2)

305-139 DADF Invert Sensor Off Jam

BSD-ON:BSD 5.6 Document Scan and Invert

- After the DADF Reg Sensor turned OFF in the Scan operation, the DADF Invert Sensor did not turn OFF within the specified time.
- During the Simplex scan operation where there is a next document, after the Next Document Scan Read Speed Control started (DADF Reg Motor On (CCW)), the DADF Inverter Sensor did not turn OFF within the specified time.

NOTE: *When turning the power OFF, turn OFF the Power Switch first and then the Main Power Switch.*

Cause/Action

Check the following:

- Transportation failure due to foreign substance in the document path
- The surface of the roll for foreign substance
- The surface of the roll for wear
- The Invert Gate for operation failure
- DADF Reg Motor: DC330 [005-038] (PL 51.5)
- Check if the Exit Roll is nipping properly. (Including the operations of Exit Nip Release Solenoid (DC330 [005-072])) (PL 51.6)
- Check the circuit between the DADF Reg Sensor and the DADF PWB
- DADF Reg Sensor: DC330 [005-110] (PL 51.17)
- Check the circuit between the DADF Inverter Sensor and the DADF PWB
- DADF Invert Sensor: DC330 [005-211] (PL 51.9)
- DADF PWB failure. (PL 51.2)

305-145 DADF Reg Sensor Off Jam (Invert)

BSD-ON:BSD 5.5 Document Feed (2 of 2)

BSD-ON:BSD 5.6 Document Scan and Invert

After the DADF Pre Reg Sensor turned OFF at Invert, the DADF Reg Sensor did not turn OFF within the specified time.

NOTE: *When turning the power OFF, turn OFF the Power Switch first and then the Main Power Switch.*

Cause/Action

Check the following:

- Transportation failure due to foreign substance in the document path
- The surface of the roll for foreign substance
- The surface of the roll for wear
- DADF Reg Motor: DC330 [005-038] (PL 51.5)
- DADF Feed Motor: DC330 [005-017] (PL 51.5)
- Check the circuit between the DADF Reg Sensor and the DADF PWB
- DADF Reg Sensor: DC330 [005-110] (PL 51.17)
- Check the circuit between the DADF Pre Reg Sensor and the DADF PWB (BSD 5.5 Document Feed (2 of 2))
- DADF Pre Reg Sensor: DC330 [005-206] (PL 51.17)
- DADF PWB failure. (PL 51.2)

305-146 DADF Pre Reg Sensor Off Jam

BSD-ON:BSD 5.5 Document Feed (2 of 2)

- After the DADF Feed Out Sensor turned OFF in Simplex, the DADF Pre Reg Sensor did not turn OFF within the specified time.
- After the DADF Reg Motor turned ON in Duplex, the DADF Pre Reg Sensor did not turn OFF within the specified time.

NOTE: *When turning the power OFF, turn OFF the Power Switch first and then the Main Power Switch.*

Cause/Action

Check the following:

- Transportation failure due to foreign substance in the document path
- The surface of the roll for foreign substance
- The surface of the roll for wear
- DADF Reg Motor: DC330 [005-038] (PL 51.5)
- The Invert Gate for operation failure
- Check if the Exit Roll is nipping properly. (Including the operations of Exit Nip Release Solenoid) DC330 [005-072] (PL 51.6)
- Check the circuit between the DADF Pre Reg Sensor and the DADF PWB
- DADF Pre Reg Sensor: DC330 [005-206] (PL 51.17)
- DADF PWB failure. (PL 51.2)

305-147 DADF Pre Reg Sensor Off Jam (Invert)

BSD-ON:BSD 5.6 Document Scan and Invert

BSD-ON:BSD 5.5 Document Feed (2 of 2)

After the DADF Reg Motor turned ON at Invert, the DADF Pre Reg Sensor did not turn OFF within the specified time.

NOTE: *When turning the power OFF, turn OFF the Power Switch first and then the Main Power Switch.*

Cause/Action

Check the following:

- Transportation failure due to foreign substance in the document path
- The surface of the roll for foreign substance
- The surface of the roll for wear
- DADF Reg Motor: DC330 [005-038] (PL 51.5)
- Check the circuit between the DADF Reg Sensor and the DADF PWB (BSD 5.6 Document Scan and Invert)
- Check the circuit between the DADF Inverter Sensor and the DADF PWB (BSD 5.6 Document Scan and Invert)
- DADF Reg Sensor: DC330 [005-110] (PL 51.17)
- DADF Invert Sensor: DC330 [005-211] (PL 51.9)
- DADF PWB failure. (PL 51.2)

305-194 Mixed Size Mismatch Jam

BSD-ON:BSD 5.3 Document Size Sensing (2 of 2)

In Mixed Size Originals, it was detected that the size in the Fast Scan Direction was different from the width of the document guide.

NOTE: *When turning the power OFF, turn OFF the Power Switch first and then the Main Power Switch.*

Cause/Action

Check the following:

- Check that the DADF Tray Set Guide operates normally.
- Check the circuit between the DADF Tray Set Guide Sensor 1-3 and the DADF PWB
- DADF Tray Set Guide Sensor 1-3: DC330 [005-215/216/217] (PL 51.10)

305-196 Size Mismatch Jam On No Mix-Size

BSD-ON: BSD 5.2 Document Size Sensing (1 of 2)

BSD-ON:BSD 5.3 Document Size Sensing (2 of 2)

BSD-ON:BSD 5.4 Document Feed (1 of 2)

A document in a different size from the first document was detected in the No Mix mode.

NOTE: *When turning the power OFF, turn OFF the Power Switch first and then the Main Power Switch.*

Cause/Action

Check the following:

- DADF Tray Set Guide Sensor 1-3: DC330 [005-215/216/217] (PL 51.10)
- DADF APS Sensor 1: DC330 [005-218] (PL 51.17)
- Document Tray Size Sensor 1/2: DC330 [005-221/222] (PL 51.10)

If no problems are found, replace the DADF PWB (PL 51.2).

305-197 Prohibit Combine Size Jam

BSD-ON:BSD 5.5 Document Feed (2 of 2)

A prohibited size combination was detected.

Cause/Action

Explain to the customer that the following combinations are prohibited.

- 5.5 x 8.5 SEF and all the other document sizes.
- A5 SEF and all the other document sizes.
- B5 SEF, plus 11 x 15 SEF, 11 x 17 SEF, A4 LEF, A3 LEF, 8.5 x 11 LEF.
- 16K SEF, plus 11 x 15 SEF, 11 x 17 SEF, A4 LEF, and A3 LEF.

305-198 Too Short Size Jam

BSD-ON:BSD 5.5 Document Feed (2 of 2)

It was detected that the document length in Slow Scan direction was out of the specifications.

- Simplex mode: shorter than 85mm
- Duplex mode: shorter than 110mm

NOTE: *When turning the power OFF, turn OFF the Power Switch first and then the Main Power Switch.*

Cause/Action

Check the document size a user has scanned. If its length is within the available range for DADF feeding, check the circuit between the DADF Pre Reg Sensor, the DADF Feed Out Sensor, and the DADF PWB.

If no problems are found, replace the DADF PWB (PL 51.2).

305-199 Too Long Size Jam

BSD-ON:BSD 5.5 Document Feed (2 of 2)

It was detected that the document length in Slow Scan direction was out of the specifications.

- Simplex and Duplex modes: 431.9mm or longer
- Fax mode: 1501.0mm or longer

NOTE: *When turning the power OFF, turn OFF the Power Switch first and then the Main Power Switch.*

Cause/Action

Check the document size a user has scanned. If its length is within the available range for DADF feeding, check the circuit between the DADF Pre Reg Sensor, the DADF Feed Out Sensor, and the DADF PWB.

If no problems are found, replace the DADF PWB (PL 51.2).

305-210 DADF Download Fail

BSD-ON:BSD 3.5 PWB Communication (5 of 7)

When the IISS starts up (Power ON/Sleep recovery), it was detected that the DADF is in Download Mode.

Cause/Action

Perform the DADF software download.

305-275 DADF RAM Test Fail

BSD-ON:BSD 3.5 PWB Communication (5 of 7)

The DADF PWB RAM failed during the Read/Write operation. (At Power ON)

NOTE: *When turning the power OFF, turn OFF the Power Switch first and then the Main Power Switch.*

Cause/Action

If the problem persists after turning the power OFF then ON, replace the DADF PWB (PL 51.2).

305-280 DADF EEPROM Fail

BSD-ON:BSD 3.5 PWB Communication (5 of 7)

The DADF EEPROM Read/Write operation failed.

NOTE: *When turning the power OFF, turn OFF the Power Switch first and then the Main Power Switch.*

Cause/Action

If the problem persists after turning the power OFF then ON, replace the DADF PWB (PL 51.2).

305-305 DADF Feeder Cover Interlock Open (when running)

BSD-ON:BSD 5.1 Document Setting

The Feeder Cover Interlock was opened during DADF operation.

NOTE: *When turning the power OFF, turn OFF the Power Switch first and then the Main Power Switch.*

Cause/Action

Check the following:

- The DADF Feeder Cover for a mismatch.
- DADF Interlock Switch: DC330 [005-212] (PL 51.5)

If the problem persists, check the circuit between the DADF Interlock Switch and the DADF PWB. If no problems are found, replace the DADF PWB (PL 51.2).

305-906 DADF Feed Out Sensor Static Jam

BSD-ON:BSD 5.5 Document Feed (2 of 2)

The DADF Feed Out Sensor turns ON at the following timings.

1. When Power is ON
2. At Feeder Cover Interlock Close
3. At Platen Interlock Close

NOTE: *When turning the power OFF, turn OFF the Power Switch first and then the Main Power Switch.*

Cause/Action

Check the following:

- Check the DADF Feed Out Sensor for remaining paper, the Actuator for return failure, foreign substances, contamination on sensors, and etc.
- DADF Feed Out Sensor: DC330 [005-205] (PL 51.6)

If the problem persists, check the circuit between the DADF Feed Out Sensor and the DADF PWB. If no problems are found, replace the DADF PWB (PL 51.2).

305-907 DADF Pre Reg Sensor Static Jam

BSD-ON:BSD 5.5 Document Feed (2 of 2)

The DADF Pre Reg Sensor turns ON at the following timings:

1. When Power is ON
2. At Feeder Cover Interlock Close
3. At Platen Interlock Close

NOTE: *When turning the power OFF, turn OFF the Power Switch first and then the Main Power Switch.*

Cause/Action

Check the following:

- Check the DADF Pre Reg Sensor for remaining paper, the Actuator for return failure, foreign substances, contamination on sensors, and etc.
- DADF Pre Reg Sensor: DC330 [005-206] (PL 51.17)

If the problem persists, check the circuit between the DADF Pre Reg Sensor and the DADF PWB. If no problems are found, replace the DADF PWB (PL 51.2).

305-908 DADF Reg Sensor Static Jam

BSD-ON:BSD 5.6 Document Scan and Invert

The DADF Reg Sensor turns ON at the following timings:

1. When Power is ON
2. At Feeder Cover Interlock Close
3. At Platen Interlock Close

NOTE: *When turning the power OFF, turn OFF the Power Switch first and then the Main Power Switch.*

Cause/Action

Check the following:

- Check the DADF Reg Sensor for remaining paper, foreign substances, contamination on sensors, and etc.
- DADF Reg Sensor: DC330 [005-110] (PL 51.17)

If the problem persists, check the circuit between the DADF Reg Sensor and the DADF PWB. If no problems are found, replace the DADF PWB (PL 51.2).

305-913 DADF Inverter Sensor Static Jam

BSD-ON:BSD 5.6 Document Scan and Invert

The DADF Invert Sensor turns On at the timings below.

1. When Power is ON
2. At Feeder Cover Interlock Close
3. At Platen Interlock Close

NOTE: *When turning the power OFF, turn OFF the Power Switch first and then the Main Power Switch.*

Cause/Action

Check the following:

- Check the DADF Inverter Sensor for remaining paper, the Actuator for return failure, foreign substances, contamination on sensors, and etc.
- DADF Invert Sensor: DC330 [005-211] (PL 51.9)

If the problem persists, check the circuit between the DADF Invert Sensor and the DADF PWB. If no problems are found, replace the DADF PWB (PL 51.2).

305-915 DADF APS Sensor 1 Static Jam

BSD-ON:BSD 5.4 Document Feed (1 of 2)

The DADF APS Sensor 1 turns ON at the timings below.

1. When Power is ON
2. At Feeder Cover Interlock Close
3. At Platen Interlock Close

NOTE: *When turning the power OFF, turn OFF the Power Switch first and then the Main Power Switch.*

Cause/Action

Check the following:

- Check the DADF APS Sensor 1 for remaining paper, the Actuator for return failure, foreign substances, contamination on sensors, and etc.
- DADF APS Sensor 1: DC330 [005-218] (PL 51.17)

If the problem persists, check the circuit between the DADF APS Sensor 1 and the DADF PWB. If no problems are found, replace the DADF PWB (PL 51.2).

305-916 DADF APS Sensor 2 Static Jam

BSD-ON:BSD 5.4 Document Feed (1 of 2)

The DADF APS Sensor 2 turns ON at the timings below.

1. When Power is ON
2. At Feeder Cover Interlock Close
3. At Platen Interlock Close

NOTE: *When turning the power OFF, turn OFF the Power Switch first and then the Main Power Switch.*

Cause/Action

Check the following:

- Check the DADF APS Sensor 2 for remaining paper, the Actuator for return failure, foreign substances, contamination on sensors, and etc.
- DADF APS Sensor 2: DC330 [005-219] (PL 51.17)

If the problem persists, check the circuit between the DADF APS Sensor 2 and the DADF PWB. If no problems are found, replace the DADF PWB (PL 51.2).

305-917 DADF APS Sensor 3 Static Jam

BSD-ON:BSD 5.4 Document Feed (1 of 2)

The DADF APS Sensor 3 turns ON at the timings below.

1. When Power is ON
2. At Feeder Cover Interlock Close
3. At Platen Interlock Close

NOTE: *When turning the power OFF, turn OFF the Power Switch first and then the Main Power Switch.*

Cause/Action

Check the following:

- Check the DADF APS Sensor 3 for remaining paper, the Actuator for return failure, foreign substances, contamination on sensors, and etc.
- DADF APS Sensor 3: DC330 [005-220] (PL 51.17)

If the problem persists, check the circuit between the DADF APS Sensor 3 and the DADF PWB. If no problems are found, replace the DADF PWB (PL 51.2).

305-940 DADF No Original

BSD-ON:-

It was detected that the document was pulled out during document feed.

Cause/Action

Reload the document.

305-941 Doc number of sheets is insufficient

BSD-ON:-

It was detected that some documents were missing at post-Jam recovery.

Cause/Action

Follow the instructions on the UI screen to reload the document that was jammed.

305-945 FS-Size Mismatch Jam On No Mix-Size or SS Mix-Size (Cont)

BSD-ON:BSD 5.4 Document Feed (1 of 2)

BSD-ON:BSD 5.3 Document Size Sensing (2 of 2)

In No Mix or Slow Scan (SS) Mixed mode, it was detected that a document with a different size in Fast Scan (FS) direction was transported from the DADF.
(If paper was not fed, 305-945 is displayed. If paper was fed, 305-947 is displayed.)

NOTE: *When turning the power OFF, turn OFF the Power Switch first and then the Main Power Switch.*

Cause/Action

Check the following:

- Check that the DADF Tray Set Guide operates normally.
- DADF Tray Set Guide Sensor 1-3: DC330 [005-215/216/217] (PL 51.10)
- Check the circuit between the DADF Tray Set Guide Sensor 1-3 and the DADF PWB
- DADF APS Sensors 1-3: DC330 [005-218/219/220] (PL 51.17)
- Check the circuit between the DADF APS Sensors 1-3 and the DADF PWB.

If no problems are found, replace the DADF PWB (PL 51.2).

305-946 SS-Size Mismatch Jam On No Mix-Size (Cont)

BSD-ON: BSD 5.2 Document Size Sensing (1 of 2)

BSD-ON:BSD 5.4 Document Feed (1 of 2)

BSD-ON:BSD 5.5 Document Feed (2 of 2)

BSD-ON:BSD 5.6 Document Scan and Invert

In No Mix mode, it was detected that a document with a different size in Slow Scan (SS) direction was transported from the DADF. (If paper was not fed, 005-946 is displayed. If paper was fed, 305-948 is displayed.)

NOTE: *When turning the power OFF, turn OFF the Power Switch first and then the Main Power Switch.*

Cause/Action

Check the following:

- Document Tray Size Sensor 1/2: DC330 [005-221/222] (PL 51.10)
- Check the circuit between the Document Tray Size Sensor 1/2 and the DADF PWB.
- DADF Feed Out Sensor: DC330 [005-205] (PL 51.6)
- DADF Reg Sensor: DC330 [005-110] (PL 51.17)
- DADF APS Sensors 1-3: DC330 [005-218/219/220] (PL 51.17)
- Check the circuit between the DADF APS Sensors 1-3 and the DADF PWB.

If no problems are found, replace the DADF PWB (PL 51.2).

305-947 FS-Size Mismatch Jam On No Mix-Size or SS Mix-Size

BSD-ON:BSD 5.3 Document Size Sensing (2 of 2)

BSD-ON:BSD 5.4 Document Feed (1 of 2)

In No Mix or Slow Scan (SS) Mixed mode, it was detected that a document with a different size in Fast Scan (FS) direction was transported from the DADF.
(If paper was not fed, 305-945 is displayed. If paper was fed, 005-947 is displayed.)

NOTE: *When turning the power OFF, turn OFF the Power Switch first and then the Main Power Switch.*

Cause/Action

Check the following:

- Check that the DADF Tray Set Guide operates normally.
- DADF Tray Set Guide Sensor 1-3: DC330 [005-215/216/217] (PL 51.10)
- Check the circuit between the DADF Tray Set Guide Sensor 1-3 and the DADF PWB
- DADF APS Sensors 1-3: DC330 [005-218/219/220] (PL 51.17)
- Check the circuit between the DADF APS Sensors 1-3 and the DADF PWB.

If no problems are found, replace the DADF PWB (PL 51.2).

305-948 SS-Size Mismatch Jam On No Mix-Size

BSD-ON: BSD 5.2 Document Size Sensing (1 of 2)

BSD-ON:BSD 5.4 Document Feed (1 of 2)

BSD-ON:BSD 5.5 Document Feed (2 of 2)

BSD-ON:BSD 5.6 Document Scan and Invert

In No Mix mode, it was detected that a document with a different size in Slow Scan (SS) direction was transported from the DADF. (If paper was not fed, 305-946 is displayed. If paper was fed, 005-948 is displayed.)

NOTE: *When turning the power OFF, turn OFF the Power Switch first and then the Main Power Switch.*

Cause/Action

Check the following:

- Document Tray Size Sensor 1/2: DC330 [005-221/222] (PL 51.10)
- Check the circuit between the Document Tray Size Sensor 1/2 and the DADF PWB.
- DADF Feed Out Sensor: DC330 [005-205] (PL 51.6)
- DADF Reg Sensor: DC330 [005-110] (PL 51.17)
- DADF APS Sensors 1-3: DC330 [005-218/219/220] (PL 51.17)
- Check the circuit between the DADF APS Sensors 1-3 and the DADF PWB.

If no problems are found, replace the DADF PWB (PL 51.2).

310-300 Fuser Hot Not Ready Return Time Fault

BSD-ON:BSD 10.4 Fusing Heat Control (2 of 2)

The time taken to recover from High Temperature Not Ready state has exceeded the specified time.

NOTE: *When turning the power OFF, turn OFF the Power Switch first and then the Main Power Switch.*

Cause/Action

1. Turn the power OFF and ON.
2. Turn the power OFF and check the following:
   - Remove the Fuser Assembly. The Drawer Connector between the Fuser Assembly and the Main Unit (P/DJ600) for broken/bent pins, foreign substances, burns, and etc.
   - The connection between the Fuser Assembly DJ600 and the MCU PWB J431 for open circuit, short circuit, and poor contact.

   If no problems are found, replace the following parts in sequence:
   - Fuser Assembly (PL 7.1)
   - MCU PWB (7525/30/35) (PL 18.2A)
   - MCU PWB (7545/56) (PL 18.2B)

310-311 Heat Belt STS Rear Disconnection Fault

BSD-ON:BSD 10.4 Fusing Heat Control (2 of 2)

The open circuit AD value of the Rear Thermistor was detected 3 times in a row.

NOTE: *When turning the power OFF, turn OFF the Power Switch first and then the Main Power Switch.*

Initial Actions

- Turn the power OFF and remove the Fuser Assembly. The Drawer Connector between the Fuser Assembly and the Main Unit (P/DJ600) for broken/bent pins, foreign substances, burns, and etc.
- Check whether the MCU PWB connector J431 is connected properly.

Procedure

Measure the resistance between Fuser Assembly P600-A9 and P600-A10. **Is the resistance infinite?**

Y **N**

Check the following connections for open circuits, short circuits, and poor contacts.
- Between DJ600-A3 and MCU PWB J431-9
- Between DJ600-A2 and MCU PWB J431-10

If no problems are found, replace the MCU PWB.
- MCU PWB (7525/30/35) (PL 18.2A)
- MCU PWB (7545/56) (PL 18.2B)

Replace the Fuser Assembly (PL 7.1).

310-320 Heat Belt STS Rear Over Temperature Fault

BSD-ON:BSD 10.4 Fusing Heat Control (2 of 2)

The AD value of the Rear Thermistor was detected to be higher than the defined value 4 times in a row.

NOTE: *To clear this Fault, clear the history in NVM (744-001) and then turn the power OFF and ON.*
When turning the power OFF, turn OFF the Power Switch first and then the Main Power Switch.

Initial Actions

- Turn the power OFF and remove the Fuser Assembly. Check whether foreign substances or paper is wound around the Heat Roll.
- The Drawer Connector between the Fuser Assembly and the Main Unit (P/DJ600) for broken/bent pins, foreign substances, burns, and etc.
- Check whether the MCU PWB connector J431 is connected properly.

Procedure

Check the following connections for short circuits and poor contacts.

- Between DJ600-A3 and MCU PWB J431-9
- Between DJ600-A2 and MCU PWB J431-10

If no problems are found, replace the following parts in sequence:

- Fuser Assembly (PL 7.1)
- MCU PWB (7525/30/35) (PL 18.2A)
- MCU PWB (7545/56) (PL 18.2B)

310-326 Fuser On Time Fault

BSD-ON:BSD 10.4 Fusing Heat Control (2 of 2)

When in Ready or Standby states, the temperature monitor value of the Rear Thermistor did not reach the specified temperature within the specified time after the IH power had turned ON.

NOTE: *When turning the power OFF, turn OFF the Power Switch first and then the Main Power Switch.*

Cause/Action

1. Turn the power OFF and ON.
2. Turn the power OFF and check the following:
   - Remove the Fuser Assembly. The Drawer Connector between the Fuser Assembly and the Main Unit (P/DJ600) for broken/bent pins, foreign substances, burns, and etc.
   - The connection between the DJ600-A2/A3 and the MCU PWB J431-10/9 for open circuit, short circuit, and poor contact

   If no problems are found, replace the following parts in sequence:
   - Fuser Assembly (PL 7.1)
   - MCU PWB (7525/30/35) (PL 18.2A)
   - MCU PWB (7545/56) (PL 18.2B)

310-330 Fuser Motor Fault

BSD-ON:BSD 10.1 Fuser Drive Control (1 of 2)

BSD-ON:BSD 9.29 1st BTR Contact Retract Control

The Fuser Drive Motor revolution failure was detected.

NOTE: *When turning the power OFF, turn OFF the Power Switch first and then the Main Power Switch.*

Initial Actions

- Turn the power OFF and check whether the Fuser Assembly is installed properly.
- With the Fuser in nipped state, rotate the Roller manually to check for loading.

Procedure

Turn the power OFF and remove the Rear Upper Cover. Disconnect the connector J592 of the MD PWB and open the Chassis Assembly.
Turn the power ON and enter the Diag mode. Turn ON dC330 [010-006] (Fuser Drive Motor).
Does the Fuser Drive Motor rotate?

Y N

Is the voltage between the Fuser Drive Motor J242-1 (+) and the GND (-) +24VDC?

Y N

Go to +24VDC Power RAP (7525/30/35) +24VDC Power RAP or +24VDC Power RAP (7545/56) +24VDC Power RAP.

Is the voltage between the Fuser Drive Motor J243-1 (+) and the GND (-) +5VDC?

Y N

Go to +5VDC Power +5VDC Power RAP.

Turn the power OFF and check the connection between the MD PWB J525 and the Fuser Drive Motor J243 for open circuit, short circuit, and poor contact.
If no problems are found, replace the following parts in sequence:

- Fuser Drive Motor (PL 3.1)
- MD PWB (7525/30/35) (PL 18.2A)
- MD PWB (7545/56) (PL 18.2B)
- MCU PWB (7525/30/35) (PL 18.2A)
- MCU PWB (7545/56) (PL 18.2B)

Press the Stop button. Check the operation of dC330 [094-012] (1st BTR Contact) and dC330 [094-013] (1st BTR Retract) **alternately**. **Does the Fuser Drive Motor rotate?**

Y N

Turn the power OFF and check the 1st BTR Contact/Retract Gear for blockage or damage.

Turn the power OFF and check the connection between the Fuser Drive Motor J243-8 and the MD PWB J525-A1 for open circuit, short circuit, and poor contact.
If no problems are found, replace the following parts in sequence:

- MD PWB (7525/30/35) (PL 18.2A)
- MD PWB (7545/56) (PL 18.2B)
- MCU PWB (7525/30/35) (PL 18.2A)
- MCU PWB (7545/56) (PL 18.2B)

310-360 IH Driver Input High Voltage Fault

BSD-ON:BSD 10.3 Fusing Heat Control (1 of 2)

BSD-ON:BSD 1.2 Main Power On (2 of 2)

The input voltage of the IH Driver is high voltage (150VAC or higher). (Status code 0x1 is received)

NOTE: *When turning the power OFF, turn OFF the Power Switch first and then the Main Power Switch.*

Procedure

Turn the power OFF. Remove the Right Cover and remove the Front LVPS Fan.
Turn the main power ON (turn ON the Main Power Switch).
Is the voltage between the Main LVPS J6-1 and J6-3 100VAC?

Y **N**

Go t oAC Power RAP.

Turn the main power OFF and replace the following parts in sequence:

- IH Driver (PL 18.3)
- MCU PWB (7525/30/35) (PL 18.2A)
- MCU PWB (7545/56) (PL 18.2B)

310-361 IH Driver Input Low Voltage Fault

BSD-ON:BSD 10.3 Fusing Heat Control (1 of 2)

BSD-ON:BSD 1.2 Main Power On (2 of 2)

The input voltage of the IH Driver is low voltage (80VAC or lower). (Status code 0x2 is received)

NOTE: *When turning the power OFF, turn OFF the Power Switch first and then the Main Power Switch.*

Procedure

Turn the power OFF. Remove the Right Cover and remove the Front LVPS Fan.
Turn the main power ON (turn ON the Main Power Switch).
Is the voltage between the Main LVPS J6-1 and J6-3 100VAC?

Y **N**

Go to AC Power RAP.

Turn the main power OFF and replace the following parts in sequence:

- IH Driver (PL 18.3)
- MCU PWB (7525/30/35) (PL 18.2A)
- MCU PWB (7545/56) (PL 18.2B)

310-362 IH Driver Surge Fault

BSD-ON:BSD 10.3 Fusing Heat Control (1 of 2)

The IH Driver detected surge. (Status code 0x3 is received)

NOTE: *When turning the power OFF, turn OFF the Power Switch first and then the Main Power Switch.*

Cause/Action

1. Turn the power OFF and ON.
2. Check the voltage and voltage noise at customer's outlet.

   If the problem was not resolved by turning the power OFF then ON and no problems were found after checking the voltage and voltage noise at the outlet, replace the IH Driver (PL 18.3).

310-363 IGBT Temperature High Fault

BSD-ON:BSD 10.3 Fusing Heat Control (1 of 2)

The IGBT Temperature Sensor detected high temperature. (Status code 0x4 is received)

NOTE: *When turning the power OFF, turn OFF the Power Switch first and then the Main Power Switch.*

Procedure

Turn the power OFF and remove the Rear Upper Cover. Disconnect the connector J592 of the MD PWB and open the Chassis Assembly.
Turn the power ON and enter the Diag mode. Turn ON dC330 [042-016] (IH Intake Fan).
Is the IH Intake Fan rotating?
Y **N**
Proceed to the 342-332 RAP.

Press the Stop button. Turn ON dC330 [042-017] (IH Exhaust Fan).
Is the IH Exhaust Fan rotating?
Y **N**
Proceed to the 342-330 RAP.

Press the Stop button.
Turn the power OFF and check the connection between the IH Driver J530 and the MCU PWB J414 for open circuit, short circuit, and poor contact. (For 7545/56, perform the check after removing the Sub LVPS.)
If no problems are found, replace the following parts in sequence:

- IH Driver (PL 18.3)
- MCU PWB (7525/30/35) (PL 18.2A)
- MCU PWB (7545/56) (PL 18.2B)

310-364 IGBT Temperature Sensor Fault

BSD-ON:BSD 10.3 Fusing Heat Control (1 of 2)

An open circuit, short circuit, or abnormal change in Sensor value was detected at the IGBT Temperature Sensor. (Status code 0x5 is received)

NOTE: *When turning the power OFF, turn OFF the Power Switch first and then the Main Power Switch.*

Cause/Action

1. Turn the power OFF and ON.
2. Turn the power OFF and check the connection between the IH Driver J530 and the MCU PWB J414 for open circuit, short circuit, and poor contact.
   (For 7545/56, perform the check after removing the Sub LVPS.)

   If no problems are found, replace the following parts in sequence:
   - IH Driver (PL 18.3)
   - MCU PWB (7525/30/35) (PL 18.2A)
   - MCU PWB (7545/56) (PL 18.2B)

310-367 Input Low Current Fault

BSD-ON:BSD 10.3 Fusing Heat Control (1 of 2)

The input current was below the lower limit continuously for the specified time. (Status code 0x8 is received)

NOTE: *When turning the power OFF, turn OFF the Power Switch first and then the Main Power Switch.*

Initial Actions

Turn the power OFF and remove the Fuser Assembly. The Drawer Connector between the Fuser Assembly and the Main Unit (P/DJ600) for broken/bent pins, foreign substances, burns, and etc.

Procedure

Check the following: (For 7545/56, perform the check after removing the Sub LVPS.)

- The relay connector P/J634 for poor contact
- The connection between the IH Driver T60 and the Fuser Assembly DJ600-1 for short circuit and poor contact
- The connection between the IH Driver T61 and the Fuser Assembly DJ600-3 for short circuit and poor contact

If no problems are found, replace the following parts in sequence:

- IH Driver (PL 18.3)
- Fuser Assembly (PL 7.1)
- MCU PWB (7525/30/35) (PL 18.2A)
- MCU PWB (7545/56) (PL 18.2B)

310-368 Encoder Pulse Fault

BSD-ON:BSD 10.1 Fuser Drive Control (1 of 2)

The level change of the Belt Speed Sensor was in less than 1 second. (Status code 0x9 is received)

NOTE: *When turning the power OFF, turn OFF the Power Switch first and then the Main Power Switch.*

Initial Actions

- Turn the power OFF and remove the Fuser Assembly. The Drawer Connector between the Fuser Assembly and the Main Unit (P/DJ600) for broken/bent pins, foreign substances, burns, and etc.
- Check whether the MCU PWB connector J431 is connected properly.

Procedure

Check the following connections for short circuits and poor contacts.

- Between MCU PWB J431-12 and Fuser Assembly DJ600-B7
- Between MCU PWB J431-13 and Fuser Assembly DJ600-B6
- Between MCU PWB J431-14 and Fuser Assembly DJ600-B5

If no problems are found, replace the following parts in sequence:

- Fuser Assembly (PL 7.1)
- MCU PWB (7525/30/35) (PL 18.2A)
- MCU PWB (7545/56) (PL 18.2B)

310-369 IH Driver Communication Fault

BSD-ON:BSD 10.3 Fusing Heat Control (1 of 2)

Communication error between the IH Driver and the MCU PWB has occurred.
(Status code 0xC is received. Or, communication error between the DD and the IH was detected)

NOTE: *When turning the power OFF, turn OFF the Power Switch first and then the Main Power Switch.*

Cause/Action

1. Turn the power OFF and ON.
2. Turn the power OFF and check the connection between the MCU PWB J414 and the IH Driver PWB J530 for open circuit, short circuit, and poor contact. (For 7545/56, perform the check after removing the Sub LVPS.)

   If no problems are found, replace the following parts in sequence:

   - IH Driver (PL 18.3)
   - MCU PWB (7525/30/35) (PL 18.2A)
   - MCU PWB (7545/56) (PL 18.2B)

310-370 IH Driver Freeze Fault

BSD-ON:BSD 10.3 Fusing Heat Control (1 of 2)

The IH Driver Freeze port became Active (Low). (The CPU of the IH Driver has hanged.)

NOTE: *When turning the power OFF, turn OFF the Power Switch first and then the Main Power Switch.*

Cause/Action

1. Turn the power OFF and ON.
2. Turn the power OFF and check the connection between the MCU PWB J414 and the IH Driver PWB J530 for open circuit, short circuit, and poor contact. (For 7545/56, perform the check after removing the Sub LVPS.)

   If no problems are found, replace the following parts in sequence:
   - IH Driver (PL 18.3)
   - MCU PWB (7525/30/35) (PL 18.2A)
   - MCU PWB (7545/56) (PL 18.2B)

310-371 Heat Belt STS Center Disconnection Fault

BSD-ON:BSD 10.4 Fusing Heat Control (2 of 2)

The open circuit AD value of the Center Thermistor was detected 3 times in a row.

NOTE: *When turning the power OFF, turn OFF the Power Switch first and then the Main Power Switch.*

Initial Actions

- Turn the power OFF and remove the Fuser Assembly. The Drawer Connector between the Fuser Assembly and the Main Unit (P/DJ600) for broken/bent pins, foreign substances, burns, and etc.
- Check whether the MCU PWB connector J431 is connected properly.

Procedure

Measure the resistance between Fuser Assembly P600-A7 and P600-A8. **Is the resistance infinite?**

Y **N**

Check the following connections for open circuits, short circuits, and poor contacts.
- Between DJ600-A5 and MCU PWB J431-7
- Between DJ600-A4 and MCU PWB J431-8

If no problems are found, replace the MCU PWB.
- MCU PWB (7525/30/35) (PL 18.2A)
- MCU PWB (7545/56) (PL 18.2B)

Replace the Fuser Assembly (PL 7.1).

310-372 Heat Roll STS Center Over Temperature Fault

BSD-ON:BSD 10.4 Fusing Heat Control (2 of 2)

The AD value of the Center Thermistor was detected to be higher than the defined value 4 times in a row.

NOTE: *To clear this Fault, clear the history in NVM (744-001) and then turn the power OFF and ON.*
When turning the power OFF, turn OFF the Power Switch first and then the Main Power Switch.

Initial Actions

- Turn the power OFF and remove the Fuser Assembly. Check whether foreign substances or paper is wound around the Heat Roll.
- The Drawer Connector between the Fuser Assembly and the Main Unit (P/DJ600) for broken/bent pins, foreign substances, burns, and etc.
- Check whether the MCU PWB connector J431 is connected properly.

Procedure

Check the following connections for short circuits and poor contacts.

- Between DJ600-A5 and MCU PWB J431-7
- Between DJ600-A4 and MCU PWB J431-8

If no problems are found, replace the following parts in sequence:

- Fuser Assembly (PL 7.1)
- MCU PWB (7525/30/35) (PL 18.2A)
- MCU PWB (7545/56) (PL 18.2B)

310-375 Heat Belt STS Center Warm Up Time Fault

BSD-ON:BSD 10.4 Fusing Heat Control (2 of 2)

When transitioning from the Wait state, the specified Temperature is not reached within the specified time.

NOTE: *This Fault may occur when the temperature in the installation environment is low (10 degree or lower)*

When turning the power OFF, turn OFF the Power Switch first and then the Main Power Switch.

Procedure

Enter dC122 Fault History. Check whether IH Driver Input Low Voltage Fault has occurred.

Has Fault 310-361 occurred?

Y N

Turn the power OFF and check the following:

- Remove the Fuser Assembly. The Drawer Connector between the Fuser Assembly and the Main Unit (P/DJ600) for broken/bent pins, foreign substances, burns, and etc.
- The connection between the DJ600-A4/A5 and the MCU PWB J431-8/7 for open circuit, short circuit, and poor contact

If no problems are found, replace the following parts in sequence:

- Fuser Assembly (PL 7.1)
- MCU PWB (7525/30/35) (PL 18.2A)
- MCU PWB (7545/56) (PL 18.2B)

Proceed to the 310-361 RAP.

310-376 Heat Belt STS Rear Warm Up Time Fault

BSD-ON:BSD 10.4 Fusing Heat Control (2 of 2)

When transitioning from the Wait state, the specified Temperature is not reached within the specified time.

NOTE: *•This Fault may occur when the temperature in the installation environment is low (10 degree or lower)*

- *When turning the power OFF, turn OFF the Power Switch first and then the Main Power Switch.*

Cause/Action

1. Turn the power OFF and ON.
2. Turn the power OFF and check the following:
   - Remove the Fuser Assembly. The Drawer Connector between the Fuser Assembly and the Main Unit (P/DJ600) for broken/bent pins, foreign substances, burns, and etc.
   - The connection between the DJ600-A2/A3 and the MCU PWB J431-10/9 for open circuit, short circuit, and poor contact

   If no problems are found, replace the following parts in sequence:
   - Fuser Assembly (PL 7.1)
   - MCU PWB (7525/30/35) (PL 18.2A)
   - MCU PWB (7545/56) (PL 18.2B)

310-378 Heat Belt Rotation Fault

BSD-ON: BSD 10.1 Fuser Drive Control (1 of 2)

The Belt Speed Sensor output has not changed for 500ms or longer after the Fuser Motor On.

NOTE: *When turning the power OFF, turn OFF the Power Switch first and then the Main Power Switch.*

Cause/Action

1. Turn the power OFF.
2. Turn the power ON and enter the Diag mode. Turn ON dC330 [010-006] to check the operation of the Fuser Drive Motor.
3. If the Fuser Drive Motor does not operate, turn the power OFF and check the following:
   - Remove the Fuser Assembly. Check the Drawer Connector between the Fuser Assembly and the Main Unit (P/DJ600) for broken/bent pins, foreign substances, burns, and etc.
   - The connection between the DJ600-B7/B6/B5 and the MCU PWB J431-12/13/14 for open circuit, short circuit, and poor contact.

   If no problems are found, replace the following parts in sequence:
   - Fuser Assembly (PL 7.1)
   - MCU PWB (7525/30/35) (PL 18.2A)
   - MCU PWB (7545/56) (PL 18.2B)

310-380 P/Roll Latch Motor Fault

BSD-ON: BSD 10.2 Fuser Drive Control (2 of 2)

When in the P/Roll Contact/Retract operation, the Latch Position Sensor detected a Latch position error of the P/Roll.

NOTE: *When turning the power OFF, turn OFF the Power Switch first and then the Main Power Switch.*

Initial Actions

- Turn the power OFF and check whether the Fuser Assembly is installed properly.
- Remove the Fuser Assembly and check the Drawer Connector between the Fuser Assembly and the Main Unit (P/DJ600) for broken/bent pins, foreign substances, burns, and etc.
- Check whether the MCU PWB connector J431 is connected properly.

Procedure

Turn the power OFF and remove the Rear Upper Cover. Disconnect the connector J592 of the MD PWB and open the Chassis Assembly.
Turn the power ON and enter the Diag mode. Turn ON dC330 [010-009] (P/Roll Latch On) and dC330 [010-010] (P/Roll Latch Off) alternately. **Does the Latch Motor rotate?**

Y N

Refer to the +24VDC-1 Wirenet. Check the + 24VDC input to the MD PWD (J520-9 for 7525/30/35 or P/J536-7 for 7545/56) **Is the voltage between the MD PWB(+) and GND +24VDC?**

Y N

Go to +24VDC Power RAP (7525/30/35) +24VDC Power RAP or +24VDC Power RAP (7545/56) +24VDC Power RAP.

Turn the power OFF, then measure the Latch Motor wire wound resistance. Disconnect the Latch Motor J254, then measure the following resistances.

- Between Latch Motor J254 pin-2 and J254 pin-6
- Between Latch Motor J254 pin-1 and J254 pin-5

Is the resistance approx. 5.7 Ohm for each? (At 25 degrees C / 77 degrees F)

Y N

Replace the P/R Latch Motor (PL 7.1).

Measure the resistance between the disconnected connector J254-1/2/5/6 and the Frame.

Is the resistance infinite for all?

Y N

Check the wires of the pins with non-infinite resistance for peeled-off coatings and short circuits due to pinching.

If no problems are found, replace the following parts in sequence:

- MD PWB (7525/30/35) (PL 18.2A)
- MD PWB (7545/56) (PL 18.2B)
- MCU PWB (7525/30/35) (PL 18.2A)
- MCU PWB (7545/56) (PL 18.2B)

A

Press the Stop button. Turn ON dC330 [010-009] (P/Roll Latch On) and dC330 [010-202] (P/Roll Latch Sensor), as well as dC330 [010-010] (P/Roll Latch Off) and dC330 [010-202] (P/Roll Latch Sensor) alternately.

Does the display change between Low/High?

Y N

Is the voltage between the MCU PWB J431-4 (+) and the GND +1.2VDC?

Y N

Press the Stop button and turn the power OFF.
Remove the Fuser Assembly and check the connection between the DJ600-A8/A7 and the MCU PWB J431-4/5 for open circuit, short circuit, and poor contact.
If no problems are found, replace the following parts in sequence:

- Fuser Assembly (PL 7.1)
- MCU PWB (7525/30/35) (PL 18.2A)
- MCU PWB (7545/56) (PL 18.2B)

Press the Stop button and turn the power OFF.
Remove the Fuser Assembly and check the connection between the DJ600-A6 and the MCU PWB J431-6 for open circuit, short circuit, and poor contact.
If no problems are found, replace the following parts in sequence:

- Fuser Assembly (PL 7.1)
- MCU PWB (7525/30/35) (PL 18.2A)
- MCU PWB (7545/56) (PL 18.2B)

Turn the power OFF and check the Latch Motor Gear for wear or damage. If no problems are found, replace the following parts in sequence:

- MCU PWB (7525/30/35) (PL 18.2A)
- MCU PWB (7545/56) (PL 18.2B)
- MD PWB (7525/30/35) (PL 18.2A)
- MD PWB (7545/56) (PL 18.2B)

A

310-381 Fuser Assy Illegal Fault

BSD-ON:BSD 10.4 Fusing Heat Control (2 of 2)

An incorrect type of Fuser Assembly was installed. 7525/30/35 uses a different Fuser than 7545/56. Fuser can be identified by the barcode label on the bottom of the Fuser.

NOTE: *When turning the power OFF, turn OFF the Power Switch first and then the Main Power Switch.*

Cause/Action

1. Turn the power OFF and ON.
2. Turn the power OFF and replace with the correct Fuser Assembly; check the part number on the barcode label located on the bottom of the Fuser for parts compatibility (PL 7.1).
3. In the lower left corner of the barcode is a letter followed by a number, which translates to the following:

   B = Low Speed Machine (7525/30/35)

   C = High Speed Machine (7545/56)

   100 = 110 vac

   200 = 220 vac

310-382 Fuser Thermostat Fault

BSD-ON:BSD 10.4 Fusing Heat Control (2 of 2)

The Fuser Assembly Thermostat is broken or software fix is required.

NOTE: *When turning the power OFF, turn OFF the Power Switch first and then the Main Power Switch.*

Initial Actions

- Check software version for latest general software release; upgrade IOT software, as required (GP 9).
- Check the value in NVM location 744-001 (Failure Detection Flag) (range from 0 to 5).
  - 0 = No fail occurred
  - 1 = Over temperature detected by the center thermostat while running
  - 2 = Over temperature detected by the rear thermostat while running
  - 3 = Over temperature detected by the center thermostat while not running
  - 4 = Over temperature detected by the rear thermostat while not running
  - 5 = Excessive load detected (e.g. due to ferrite crack, a problem with the coil).

  If the value is 1, 2, 3 or 4, clear the value to 0.

  If the value is 5, clear the value to 0. If the problem continues, replace the Fuser and clear the value to 0.
- Turn the power OFF and remove the Fuser Assembly. Check the Drawer Connector between the Fuser Assembly and the Main Unit (P/DJ600) for broken/bent pins, foreign substances, burns, etc.
- Check whether the MCU PWB connector J431 is connected properly.

Procedure

Measure the resistance between P600 pin-A11 and P600 pin-B9. **Is the resistance infinite?**

Y **N**

Check the following connections for open circuits, short circuits, and poor contacts.

- Between DJ600-A1 and MCU PWB J431-11
- Between DJ600-B1 and MCU PWB J431-18

If no problems are found, replace the MCU PWB.

- MCU PWB (7525/30/35) (PL 18.2A)
- MCU PWB (7545/56) (PL 18.2B)

Replace the Fuser Assembly (PL 7.1).

310-398 Fuser Fan Fault

BSD-ON: BSD 10.6 Fusing

The Fuser Fan error was detected.

NOTE: *When turning the power OFF, turn OFF the Power Switch first and then the Main Power Switch.*

Initial Actions

Rotate the Fuser Fan manually to check for loading.

Procedure

Enter DC122 Fault History. **Has 041-350 faults (MD PWB F7 Open) occurred?**

Y **N**

Enter the Diag Mode, turn ON dC330 [042-011] (Fuser Fan). **Is the Fuser Fan rotating?**

Y **N**

Turn the power OFF and check the connection between the Fuser Fan J230-4/3/1 and the MD PWB J524-10/11/13 for open circuit, short circuit, and poor contact.
If no problems are found, replace the following parts in sequence:

- Fuser Fan (PL 4.1)
- MD PWB (7525/30/35) (PL 18.2A)
- MD PWB (7545/56) (PL 18.2B)
- MCU PWB (7525/30/35) (PL 18.2A)
- MCU PWB (7545/56) (PL 18.2B)

Press the Stop button and turn the power OFF.
Check the connection between the Fuser Fan J230-2 and the MD PWB J524-12 for open circuit, short circuit, and poor contact.
If no problems are found, replace the following parts in sequence:

- MD PWB (7525/30/35) (PL 18.2A)
- MD PWB (7545/56) (PL 18.2B)
- MCU PWB (7525/30/35) (PL 18.2A)
- MCU PWB (7545/56) (PL 18.2B)

Go to the 341-350 RAP.

310-420 Fuser Assembly Near Life Warning

BSD-ON:-

The Fuser Assembly is near the end of its life span.

NOTE: *When turning the power OFF, turn OFF the Power Switch first and then the Main Power Switch.*

Cause/Action

Replace the Fuser Assembly (PL 7.1) with a new one and clear dC135 [954-850]. If the problem persists, replace the MCU PWB.

- MCU PWB (7525/30/35) (PL 18.2A)
- MCU PWB (7545/56) (PL 18.2B)

310-421 Fuser Assembly Life Over Warning

BSD-ON:-

The Fuser Assembly has reached the end of its life span.

NOTE: *When turning the power OFF, turn OFF the Power Switch first and then the Main Power Switch.*

Cause/Action

Replace the Fuser Assembly (PL 7.1) with a new one and clear DC135 [954-850]. If the problem persists, replace the MCU PWB.

- MCU PWB (7525/30/35) (PL 18.2A)
- MCU PWB (7545/56) (PL 18.2B)

312-112 (Pro) H-Transport Entrance Sensor On Jam

BSD-ON:BSD 12.33 Horizontal Transportation (1 of 2)

H-Transport Entrance Sensor is not turned on within a specified time.

Initial Actions

- Check for obstructions in the paper path
- Check the H-Transport Motor Belt for wear or damage
- Check the Guides on the H-Transport Cover for damage, wear or faulty installation

Procedure

Enter dC330 [012-190], H-Transport Entrance Sensor (PL 21.25). Select **Start**. Open the H-Transport Cover and actuate the H-Transport Entrance Sensor. **The display changes.**

Y N

Go to BSD 12.33 Horizontal Transportation (1 of 2) Check the circuit of the H-Transport Entrance Sensor. Refer to the OF 99-2 RAP for troubleshooting procedure.

Select [012-090], H-Transport Motor (PL 21.28). Select **Start**. **The motor energizes.**

Y N

Select **Stop**. Go to Go to BSD 12.32 H-Transport Drives. Check the circuit of the H-Transport Motor. Refer to the OF 99-9 RAP for troubleshooting procedure.

Select **Stop**. Close the H-Transport Cover. Select [012-086] or [012-087], Gate Solenoid (PL 21.25). Select **Start**. **The Gate Solenoid actuates.**

Y N

Select **Stop**. Go to BSD 12.32 H-Transport Drives. Check the circuit of the Gate Solenoid. Refer to the OF 99-8 RAP for troubleshooting procedure.

Select **Stop**.

Check the following:

- Ensure that the connectors shown in the circuit diagrams are securely connected and that the wires are not damaged.
- Check the H-Transport Motor and its associated gears and belts for damage, contamination or misalignment.

If the above checks are OK, then replace the H-Transport Entrance Sensor (PL 21.28). If the problem persists, replace the Finisher PWB (PL 21.12).

312-113 (Pro) Booklet In Sensor On Jam

BSD-ON: BSD 12.41 Booklet Transportation

The Booklet In Sensor did not turn on within the specified time after Punch Out Sensor On.

Initial Actions

- Check for obstructions in the paper path
- Check that the Finisher is dock correctly to ensure proper Transport Gate operation
- Check the Booklet In Sensor for obstructions (PL 21.21)
- Check for transportation failure of non-standard paper
- Check the Booklet In Roll for wear or damage

Procedure

Enter dC330 [013-135], Booklet In Sensor (PL 21.21). Select Start. Actuate the Booklet In Sensor. **The display changes.**

Y N

Go to BSD 12.41 Booklet Transportation. Check the circuit of the Booklet In Sensor. Refer to the OF 99-2 RAP for troubleshooting procedure.

Select [013-068] and/or [013-069], Booklet Gate Solenoid (PL 21.10). Select Start. **The Booklet Gate Solenoid actuates.**

Y N

Select **Stop**. Go to BSD 12.37 Professional Finisher Booklet/Punch Transport Check the circuit of the Booklet Gate Solenoid. Refer to the OF 99-8 RAP for troubleshooting procedure.

Select [012-001], Finisher Transport Motor (PL 21.10). Select Start. **The motor energizes.**

Y N

Select **Stop**. Go to BSD 12.36 Professional Finisher Drives Check the circuit of the Finisher Transport Motor. Refer to the OF 99-9 RAP for troubleshooting procedure.

Select **Stop**.

Check the following:

- Ensure that the connectors shown in the circuit diagrams are securely connected and that the wires are not damaged
- Check the H-Transport Motor and its associated gears and belts for damage, contamination or alignment
- Check the Finisher Transport Motor and its associated gears and belts for damage, contamination or alignment

If the above checks are OK, then replace the Booklet In Sensor (PL 21.21). If the problem persists, replace the Finisher PWB (PL 21.12).

312-114 (Pro) Booklet In Sensor Off Jam

BSD-ON:BSD 12.41 Booklet Transportation

The Booklet In Sensor did not turn off within the specified time.

Initial Actions

- Check for obstructions in the paper path
- Check that the Finisher is dock correctly to ensure proper Transport Gate operation
- Check the Booklet In Sensor for obstructions (PL 21.21)
- Check for transportation failure of non-standard paper
- Check the Booklet In Roll for wear or damage

Procedure

Enter dC330 [013-135], Booklet In Sensor (PL 21.21). Select Start. Actuate the Booklet In Sensor. **The display changes.**

Y N

Go to BSD 12.41 Booklet Transportation. Check the circuit of the Booklet In Sensor. Refer to the OF 99-2 RAP for troubleshooting procedure.

Select [013-068] and/or [013-069], Booklet Gate Solenoid (PL 21.10). Select Start. **The Booklet Gate Solenoid actuates.**

Y N

Select **Stop**. Go to BSD 12.37 Professional Finisher Booklet/Punch Transport. Check the circuit of the Booklet Gate Solenoid. Refer to the OF 99-8 RAP for troubleshooting procedure.

Select [013-064], Booklet Paper Path Motor (PL 21.22). Select Start. **The motor energizes.**

Y N

Select **Stop**. Go to BSD 12.40 Booklet Drive. Check the circuit of the Booklet Paper Path Motor. Refer to the OF 99-9 RAP for troubleshooting procedure.

Select **Stop**.

Check the following:

- Ensure that the connectors shown in the circuit diagrams are securely connected and that the wires are not damaged
- Check the H-Transport Motor and its associated gears and belts for damage, contamination or alignment
- Check the Booklet Paper Path Motor and its associated gears and belts for damage, contamination or alignment

If the above checks are OK, then replace the Booklet In Sensor (PL 21.21). If the problem persists, replace the Finisher PWB (PL 21.12).

312-115 (Pro) Booklet Folder Roll Exit Sensor On Jam

BSD-ON:BSD 12.41 Booklet Transportation

Booklet Folder Roll Exit Sensor is not turned off within a specified time.

Initial Actions

- Check for obstructions in the paper path
- Check that the Finisher is dock correctly to ensure proper Transport Gate operation
- Check the Booklet Folder Roll Exit Sensor for obstructions (PL 21.21)
- Check for transportation failure of non-standard paper
- Check the Booklet Folding Roll for wear or damage
- Check the Booklet Eject Roll Drive rolls for wear or damage

Procedure

Enter dC330 [013-103], Booklet Folder Roll Exit Sensor (PL 21.21). Select Start. Actuate the Booklet Folder Roll Exit Sensor. **The display changes.**

Y N

Go to BSD 12.41 Booklet Transportation. Check the circuit of the Booklet Folder Roll Exit Sensor. Refer to the OF 99-2 RAP for troubleshooting procedure.

Select [013-064], Booklet Paper Path Motor (PL 21.22). Select Start. **The motor energizes.**

Y N

Select **Stop**. Go to BSD 12.40 Booklet Drive. Check the circuit of the Booklet Paper Path Motor. Refer to the OF 99-9 RAP for troubleshooting procedure.

Select **Stop**. Select [013-008], Booklet Folder Roll Motor (PL 21.22). Select Start. **The motor energizes.**

Y N

Select **Stop**. Go to BSD 12.40 Booklet Drive. Check the circuit of the Booklet Folder Roll Motor. Refer to the OF 99-9 RAP for troubleshooting procedure.

Check the following:

- Ensure that the connectors shown in the circuit diagrams are securely connected and that the wires are not damaged
- Check the Booklet Paper Path Motor and its associated gears and belts for damage, contamination or alignment
- Check the Booklet Folder Roll Motor and its associated gears and belts for damage, contamination or alignment

If the above checks are OK, then replace the Booklet Folder Roll Exit Sensor (PL 21.21). If the problem persists, replace the Finisher PWB (PL 21.12).

312-123 (Pro) H-Transport Exit Sensor On Jam

BSD-ON: BSD 12.34 Horizontal Transportation (2 of 2)

H-Transport Exit Sensor is not turned on within a specified time.

Initial Actions

- Check for obstructions in the paper path
- Check that the Finisher is dock correctly to ensure proper Transport Gate operation
- Check the H-Transport Motor Belt for wear or damage
- Check the Guides on the H-Transport Cover for damage, wear or faulty installation

Procedure

Enter dC330 [012-191], H-Transport Exit Sensor (PL 21.28). Select Start. Open the H-Transport Cover and actuate the H-Transport Exit Sensor. **The display changes.**

Y N

Go to BSD 12.34 Horizontal Transportation (2 of 2). Check the circuit of the H-Transport Exit Sensor. Refer to the OF 99-2 RAP for troubleshooting procedure.

Select [012-090], H-Transport Motor (PL 21.28). Select Start. **The motor energizes.**

Y N

Select **Stop**. Go to BSD 12.32 H-Transport Drives. Check the circuit of the H-Transport Motor. Refer to the OF 99-9 RAP for troubleshooting procedure.

Select **Stop**. Close the H-Transport Cover. Select [012-086] or [012-087], H-Transport Gate Solenoid (PL 21.25). Select Start. **The Gate Solenoid actuates.**

Y N

Select **Stop**. Go to BSD 12.32 H-Transport Drives. Check the circuit of the Gate Solenoid. Refer to the OF 99-8 RAP for troubleshooting procedure.

Select **Stop**.

Check the following:

- Ensure that the connectors shown in the circuit diagrams are securely connected and that the wires are not damaged
- Check the H-Transport Motor and its associated gears and belts for damage, contamination or misalignment

If the above checks are OK, then replace the H-Transport Exit Sensor (PL 21.28). If the problem persists, replace the Finisher PWB (PL 21.12).

312-124 (Pro) H-Transport Top Tray Exit Sensor Off Jam

BSD-ON: BSD 12.34 Horizontal Transportation (2 of 2)

H-Transport Top Tray Exit Sensor is not turned off within a specified time.

Initial Actions

- Check for obstructions in the paper path
- Check that the Finisher is dock correctly to ensure proper Transport Gate operation
- Check the H-Transport Motor Belt for wear or damage
- Check the Guides on the H-Transport Cover for damage, wear or faulty installation

Procedure

Enter dC330 [012-191], H-Transport Exit Sensor (PL 21.28). Select Start. Open the H-Transport Cover and actuate the H-Transport Exit Sensor. **The display changes.**

Y N

Go to BSD 12.34 Horizontal Transportation (2 of 2). Check the circuit of the H-Transport Exit Sensor. Refer to the OF 99-2 RAP for troubleshooting procedure.

Select **Stop**. Select [012-090], H-Transport Motor (PL 21.28). Select Start. **The motor energizes.**

Y N

Select **Stop**. Go to BSD 12.32 H-Transport Drives. Check the circuit of the H-Transport Motor. Refer to the OF 99-9 RAP for troubleshooting procedure.

Select **Stop**. Close the H-Transport Cover. Select [012-086] or [012-087], H-Transport Gate Solenoid (PL 21.25). Select Start. **The Gate Solenoid actuates.**

Y N

Select **Stop**. Go to BSD 12.32 H-Transport Drives. Check the circuit of the Gate Solenoid. Refer to the OF 99-8 RAP for troubleshooting procedure.

Select **Stop**.

Check the following:

- Ensure that the connectors shown in the circuit diagrams are securely connected and that the wires are not damaged
- Check the H-Transport Motor and its associated gears and belts for damage, contamination or misalignment

If the above checks are OK, then replace the H-Transport Exit Sensor (PL 21.28). If the problem persists, replace the Finisher PWB (PL 21.12).

312-125 (Pro) Gate Sensor On Jam

BSD-ON:BSD 12.38 Professional Finisher Transport Top Tray Gating

Gate Sensor is not turned on within a specified time.

Initial Actions

- Check for obstructions in the paper path
- Check the Finisher Drive Motor Gears and Drive rolls for wear or damage

Procedure

Enter dC330 [012-191], H-Transport Exit Sensor (PL 21.28). Select Start. Open the H-Transport Cover and actuate the H-Transport Exit Sensor. **The display changes.**

Y N

Go to BSD 12.34 Horizontal Transportation (2 of 2). Check the circuit of the H-Transport Exit Sensor. Refer to the OF 99-2 RAP for troubleshooting procedure.

Enter dC330 [012-102], Gate Sensor (PL 21.11). Select Start. Actuate the Gate Sensor. **The display changes.**

Y N

Go to BSD 12.38 Professional Finisher Transport Top Tray Gating Check the circuit of the Gate Sensor. Refer to the OF 99-2 RAP for troubleshooting procedure.

Select [012-001], Finisher Transport Motor 1Speed (PL 21.10). Select Start. **The motor energizes.**

Y N

Select **Stop**. Go to BSD 12.38 Professional Finisher Transport Top Tray Gating. Check the circuit of the Finisher Transport Motor. Refer to the OF 99-9 RAP for troubleshooting procedure.

Select **Stop**.

Check the following:

- Ensure that the connectors shown in the circuit diagrams are securely connected and that the wires are not damaged
- Check the Finisher is docked properly
- Check the Finisher Transport Motor and its associated gears and belts for damage, contamination or misalignment

If the above checks are OK, then replace the Gate Sensor (PL 21.11). If the problem persists, replace the Finisher PWB (PL 21.12).

312-132 (Pro) Transport Entrance Sensor On Jam

BSD-ON:BSD 12.38 Professional Finisher Transport Top Tray Gating

Transport Entrance Sensor is not turned on within a specified time.

Initial Actions

- Check for obstructions in the paper path
- Check that the Finisher is dock correctly to ensure proper Transport Gate operation

Procedure

Enter dC330 [012-100], Transport Entrance Sensor (PL 21.10). Select Start. Actuate the Transport Entrance Sensor. **The display changes.**

Y N

Go to BSD 12.38 Professional Finisher Transport Top Tray Gating. Check the circuit of the Transport Entrance Sensor. Refer to the OF 99-2 RAP for troubleshooting procedure.

Select [012-001], Finisher Transport Motor Speed (PL 21.10). Select Start. **The motor energizes.**

Y N

Select **Stop**. Go to BSD 12.36 Professional Finisher Drives. Check the circuit of the Finisher Transport Motor. Refer to the OF 99-9 RAP for troubleshooting procedure.

Select **Stop**.

Check the following:

- Ensure that the connectors shown in the circuit diagrams are securely connected and that the wires are not damaged
- Check the H-Transport Motor and its associated gears and belts for damage, contamination or alignment
- Check the Finisher Transport Motor and its associated gears and belts for damage, contamination or alignment

If the above checks are OK, then replace the Transport Entrance Sensor (PL 21.10). If the problem persists, replace the Finisher PWB (PL 21.12).

312-142 (Pro) Buffer Path Sensor On Jam

BSD-ON: BSD 12.39 Professional Finisher Buffer Transport

Buffer Path Sensor is not turned on within a specified time.

Initial Actions

- Check for obstructions in the paper path
- Check the Finisher Transport Motor Belt, Gears and Drive Rolls for wear or damage

Procedure

Enter dC330 [012-101], Buffer Path Sensor (PL 21.10). Select Start. Actuate the Buffer Path Sensor. **The display changes.**

Y N

Go to BSD 12.39 Professional Finisher Buffer Transport. Check the circuit of the Buffer Path Sensor. Refer to the OF 99-2 RAP for troubleshooting procedure.

Select [012-001], Finisher Transport Motor 1Speed (PL 21.10). Select Start. **The motor energizes.**

Y N

Select **Stop**. Go to BSD 12.36 Professional Finisher Drives. Check the circuit of the Finisher Transport Motor. Refer to the OF 99-9 RAP for troubleshooting procedure.

Select **Stop**. Select [012-015] and/or [012-016], Buffer Gate Solenoid (PL 21.10). Select Start. **The Gate Solenoid actuates.**

Y N

Select **Stop**. Go to BSD 12.39 Professional Finisher Buffer Transport. Check the circuit of the Buffer Gate Solenoid. Refer to the OF 99-8 RAP for troubleshooting procedure.

Select **Stop**.
Check the following:

- Ensure that the connectors shown in the circuit diagrams are securely connected and that the wires are not damaged
- Check the Buffer Rolls for obstructions
- Check the Finisher Transport Motor and its associated gears and belts for damage, contamination or misalignment

If the above checks are OK, then replace the Buffer Path Sensor (PL 21.10). If the problem persists, replace the Finisher PWB (PL 21.12).

312-151(Pro) Compiler Exit Sensor Off Jam

BSD-ON:BSD 12.51 Professional Finisher Compiling

The Compiler Exit Sensor did not turn Off within the specified time after Compiler Exit Sensor On.

Initial Actions

- Check the Buffer Reverse Roll for wear or damage
- Check the Compile Exit Roll for wear or damage
- Check for paper transportation failure due to a foreign substance/burr on the paper path
- Check for transportation failure of non-standard paper

Procedure

Enter dC330 [012-150], Compiler Exit Sensor (PL 21.9). Select Start. Actuate the Compiler Exit Sensor. **The display changes.**

Y N

Go to BSD 12.51 Professional Finisher Compiling Check the circuit of the Compiler Exit Sensor. Refer to the OF 99-2 RAP for troubleshooting procedure.

Select **Stop**. Select [012-011] or [012-012], Transport Gate Solenoid (PL 21.10), and Select Start. **The Transport Gate Solenoid actuates.**

Y N

Select **Stop**. Go to BSD 12.38 Professional Finisher Transport Top Tray Gating. Check the circuit of the Transport Gate Solenoid. Refer to the OF 99-8 RAP for troubleshooting procedure.

Select **Stop**. Select [012-015] or [012-016], Buffer Gate Solenoid (PL 21.10), and Select Start. **The Buffer Gate Solenoid actuates.**

Y N

Select **Stop**. Go to BSD 12.39 Professional Finisher Buffer Transport Check the circuit of the Buffer Gate Solenoid. Refer to the OF 99-8 RAP for troubleshooting procedure.

Select [012-007], Exit Motor (PL 21.8). Select Start. **The motor energizes.**

Y N

Select **Stop**. Go to BSD 12.36 Professional Finisher Drives. Check the circuit of the Exit Motor. Refer to the OF 99-9 RAP for troubleshooting procedure.

Select **Stop**.
Check the following:

- Ensure that the connectors shown in the circuit diagrams are securely connected and that the wires are not damaged
- Check the Exit Motor and its associated gears and belts for damage, contamination or tension

If the above checks are OK, then replace the Compiler Exit Sensor (PL 21.9). If the problem persists, replace the Finisher PWB (PL 21.12).

312-152 (Pro) Compiler Exit Sensor On Jam

BSD-ON:BSD 12.51 Professional Finisher Compiling

Not in the Punch mode: The Compiler Exit Sensor did not turn On within the specified time after Punch Out Sensor On.

In Punch mode: The Compiler Exit Sensor did not turn On within the specified time after the punching operation had begun.

Initial Actions

- Check the Buffer Roll for wear or damage
- Check the Compile Exit Roll for wear or damage
- Check for paper transportation failure due to a foreign substance/burr on the paper path
- Check for transportation failure of non-standard paper

Procedure

Enter dC330 [012-150], Compiler Exit Sensor (PL 21.9). Select Start. Actuate the Compiler Exit Sensor. **The display changes.**

Y N

Go to BSD 12.51 Professional Finisher Compiling Check the circuit of the Compiler Exit Sensor. Refer to the OF 99-2 RAP for troubleshooting procedure.

Select **Stop**. Select [012-015] or [012-016], Buffer Gate Solenoid (PL 21.10), and Select Start. **The Buffer Gate Solenoid actuates.**

Y N

Select **Stop**. Go to BSD 12.39 Professional Finisher Buffer Transport. Check the circuit of the Buffer Gate Solenoid. Refer to the OF 99-8 RAP for troubleshooting procedure.

Select **Stop**. Select [012-011] or [012-012], Transport Gate Solenoid (PL 21.10). Select Start. **The Transport Gate Solenoid actuates.**

Y N

Select **Stop**. Go to BSD 12.38 Professional Finisher Transport Top Tray Gating Check the circuit of the Transport Gate Solenoid. Refer to the OF 99-8 RAP for troubleshooting procedure.

Select [012-007], Exit Motor (PL 21.11). Select Start. **The motor energizes.**

Y N

Select **Stop**. Go to BSD 12.36 Professional Finisher Drives. Check the circuit of the Exit Motor. Refer to the OF 99-9 RAP for troubleshooting procedure.

Select **Stop**.

Check the following:

- Ensure that the connectors shown in the circuit diagrams are securely connected and that the wires are not damaged
- Check the Exit Motor and its associated gears and belts for damage, contamination or tension

If the above checks are OK, then replace the Compiler Exit Sensor (PL 21.9). If the problem persists, replace the Finisher PWB (PL 21.12).

312-161 (Pro) Set Eject Jam

BSD-ON:BSD 12.51 Professional Finisher Compiling

The Compiler Exit Sensor did not turn off within the specified time after the Eject operation has begun.

Initial Actions

- Check the Buffer Reverse Roll for wear or damage
- Check the Compile Exit Roll for wear or damage
- Check for paper transportation failure due to a foreign substance/burr on the paper path
- Check for transportation failure of non-standard paper

Procedure

Enter dC330 [012-150], Compiler Exit Sensor (PL 21.9). Select Start. Actuate the Compiler Exit Sensor. **The display changes.**

Y N

Go to BSD 12.51 Professional Finisher Compiling Check the circuit of the Compiler Exit Sensor. Refer to the OF 99-2 RAP for troubleshooting procedure.

Select [012-007]

Exit Motor (PL 21.11). Select Start. **The motor energizes.**

Y N

Select **Stop**. Go to BSD 12.36 Professional Finisher Drives. Check the circuit of the Exit Motor. Refer to the OF 99-9 RAP for troubleshooting procedure.

Select **Stop**. Select [012-011] or [012-012], Transport Gate Solenoid (PL 21.10). Select Start. **The Transport Gate Solenoid actuates.**

Y N

Select **Stop**. Go to BSD 12.38 Professional Finisher Transport Top Tray Gating. Check the circuit of the Transport Gate Solenoid. Refer to the OF 99-8 RAP for troubleshooting procedure.

Select **Stop**.

Check the following:

- Ensure that the connectors shown in the circuit diagrams are securely connected and that the wires are not damaged
- Check the Exit Motor and its associated gears and belts for damage, contamination or tension

If the above checks are OK, then replace the Compiler Exit Sensor (PL 21.9). If the problem persists, replace the Finisher PWB (PL 21.12).

312-162 (Pro) H-Transport Exit Sensor On Jam

BSD-ON:BSD 12.34 Horizontal Transportation (2 of 2)

H-Transport Exit Sensor is not turned on within a specified time.

Initial Actions

- Check for obstructions in the paper path
- Check that the Finisher is dock correctly to ensure proper Transport Gate operation
- Check the H-Transport Motor Belt for wear or damage
- Check the Guides on the H-Transport Cover for damage, wear or faulty installation
- Check the Fuser Exit Switch actuator for damage, installed properly, or actuator spring damaged or missing

Procedure

Enter dC330 [012-191], H-Transport Exit Sensor (PL 21.28). Select Start. Open the H-Transport Cover and actuate the H-Transport Exit Sensor. **The display changes.**

Y N

Select **Stop**. Go to BSD 12.33 Horizontal Transportation (1 of 2). Check the circuit of the H-Transport Exit Sensor. Refer to the OF 99-2 RAP for troubleshooting procedure.

Select [012-090], H-Transport Motor (PL 21.28). Select Start. **The motor energizes.**

Y N

Select **Stop**. Go to BSD 12.32 H-Transport Drives. Check the circuit of the H-Transport Motor. Refer to the OF 99-9 RAP for troubleshooting procedure.

Select **Stop**.

Check the following:

- Ensure that the connectors shown in the circuit diagrams are securely connected and that the wires are not damaged
- Check the H-Transport Motor and its associated gears and belts for damage, contamination or misalignment

If the above checks are OK, then replace the H-Transport Exit Sensor (PL 21.28). If the problem persists, replace the Finisher PWB (PL 21.12).

312-171 (Pro) Top Tray Exit Sensor On Jam

BSD-ON:BSD 12.48 Professional Finisher Top Tray Stacking

Not in the Punch mode: The Top Tray Exit Sensor did not turn on within the specified time after Punch Out Sensor on.

In Punch mode: The Top Tray Exit Sensor did not turn on within the specified time after the punching operation had begun.

Initial Actions

- Check Top Tray Exit for operation failure
- Check paper transportation failure due to a foreign substance/burr on the paper path
- Check transportation failure of non-standard paper

Procedure

Enter dC330 [012-115], Top Tray Exit Sensor (PL 21.11). Select Start. Actuate the Top Tray Exit Sensor. **The display changes.**

Y N

Go to BSD 12.48 Professional Finisher Top Tray Stacking Check the circuit of the Top Tray Exit Sensor. Refer to the OF 99-2 RAP for troubleshooting procedure.

Select [012-007], Exit Motor (PL 21.11). Select Start. **The motor energizes.**

Y N

Select **Stop**. Go to BSD 12.36 Professional Finisher Drives Check the circuit of the Exit Motor. Refer to the OF 99-9 RAP for troubleshooting procedure.

Select **Stop**. Select [012-011] or [012-012], Transport Gate Solenoid (PL 21.10). Select Start. **The Transport Gate Solenoid actuates.**

Y N

Select **Stop**. Go to BSD 12.38 Professional Finisher Transport Top Tray Gating. Check the circuit of the Transport Gate Solenoid. Refer to the OF 99-8 RAP for troubleshooting procedure.

Select [012-001], Finisher Transport Motor (PL 21.10). Select Start. **The motor energizes.**

Y N

Select **Stop**. Go to BSD 12.36 Professional Finisher Drives Check the circuit of the Finisher Transport Motor. Refer to the OF 99-9 RAP for troubleshooting procedure.

Select **Stop**.

Check the following:

- Ensure that the connectors shown in the circuit diagrams are securely connected and that the wires are not damaged
- Check the Exit Motor and its associated gears and belts for damage, contamination or misalignment
- Exit Drive Shaft for wear and a revolution failure
- The Exit Pinch Rolls for wear and/or damage

If the above checks are OK, then replace the Top Tray Exit Sensor (PL 21.11). If the problem persists, replace the Finisher PWB (PL 21.12).

312-172 (Pro) Top Tray Exit Sensor Off Jam

BSD-ON:BSD 12.48 Professional Finisher Top Tray Stacking

Top Tray Exit Sensor Off was not detected at the rear edge of paper within the specified time after Punch Out Sensor detected at the leading edge of the same paper.

Top Tray Exit Sensor Off was not detected at the rear edge of paper within the specified time after the punching operation had begun.

Initial Actions

- Check Top Tray Exit for operation failure
- Check paper transportation failure due to a foreign substance/burr on the paper path
- Check transportation failure of non-standard paper

Procedure

Enter dC330 [012-115], Top Tray Exit Sensor (PL 21.11). Select Start. Actuate the Top Tray Exit Sensor. **The display changes.**

Y N

Go to BSD 12.48 Professional Finisher Top Tray Stacking. Check the circuit of the Top Tray Exit Sensor. Refer to the OF 99-2 RAP for troubleshooting procedure.

Select [012-007], Exit Motor (PL 21.11). Select Start. **The motor energizes.**

Y N

Select **Stop**. Go to BSD 12.36 Professional Finisher Drives. Check the circuit of the Exit Motor. Refer to the OF 99-9 RAP for troubleshooting procedure.

Select **Stop**. Select [012-011] or [012-012], Transport Gate Solenoid (PL 21.10). Select Start. **The Transport Gate Solenoid actuates.**

Y N

Select **Stop**. Go to BSD 12.38 Professional Finisher Transport Top Tray Gating. Check the circuit of the Transport Gate Solenoid. Refer to the OF 99-8 RAP for troubleshooting procedure.

Select [012-001], Finisher Transport Motor (PL 21.10). Select Start. **The motor energizes.**

Y N

Select **Stop**. Go to BSD 12.36 Professional Finisher Drives. Check the circuit of the Finisher Transport Motor. Refer to the OF 99-9 RAP for troubleshooting procedure.

Select **Stop**.

Check the following:

- Ensure that the connectors shown in the circuit diagrams are securely connected and that the wires are not damaged
- Check the Exit Motor and its associated gears and belts for damage, contamination or misalignment
- Exit Drive Shaft for wear and a revolution failure
- The Exit Pinch Rolls for wear and/or damage

If the above checks are OK, then replace the top Tray Exit Sensor (PL 21.11). If the problem persists, replace the Finisher PWB (PL 21.12).

312-180 (Pro) Booklet Folder Roll Exit Sensor Off Jam

BSD-ON:BSD 12.41 Booklet Transportation

Booklet Folder Roll Exit Sensor is not turned off within a specified time.

Initial Actions

- Check for obstructions in the paper path
- Check the Booklet Folder Roll Exit Sensor for obstructions (PL 21.21)
- Check for transportation failure of non-standard paper
- Check the Booklet Folding Roll for wear or damage
- Check the Booklet Eject Roll Drive rolls for wear or damage

Procedure

Enter dC330 [013-103], Booklet Folder Roll Exit Sensor (PL 21.21). Select Start. Actuate the Booklet Folder Roll Exit Sensor. **The display changes.**

Y N

Go to BSD 12.41 Booklet Transportation. Check the circuit of the Booklet Folder Roll Exit Sensor. Refer to the OF 99-2 RAP for troubleshooting procedure.

Select [013-064], Booklet Paper Path Motor (PL 21.22). Select Start. **The motor energizes.**

Y N

Select **Stop**. Go to BSD 12.40 Booklet Drive. Check the circuit of the Booklet Paper Path Motor. Refer to the OF 99-9 RAP for troubleshooting procedure.

Select **Stop**. Select [013-008], Booklet Folder Roll Motor (PL 21.22). Select Start. **The motor energizes.**

Y N

Select **Stop**. Go to BSD 12.40 Booklet Drive Check the circuit of the Booklet Folder Roll Motor. Refer to the OF 99-9 RAP for troubleshooting procedure.

Check the following:

- Ensure that the connectors shown in the circuit diagrams are securely connected and that the wires are not damaged
- Check the Booklet Paper Path Motor and its associated gears and belts for damage, contamination or alignment
- Check the Booklet Folder Roll Motor and its associated gears and belts for damage, contamination or alignment

If the above checks are OK, then replace the Booklet Folder Roll Exit Sensor (PL 21.21). If the problem persists, replace the Finisher PWB (PL 21.12).

312-211(Pro) Stacker Tray Fault

BSD-ON:BSD 12.58 Professional Finisher Stack Height Detection

The Stack Height Sensor did not turn Off in 500msec after the Stacker Tray started to drive down.

The Tray Height Sensor Lower did not turn On in 5000msec after the Stacker Tray started lifting up.

Initial Actions

- The Stack Height Sensor for improper installation
- The Stack Height Sensor connectors for connection failure
- The Tray Height Sensor Lower for improper installation
- The Tray Height Sensor Lower connectors for connection failure
- The Elevator Motor for operation failure
- The Elevator Motor connectors for connection failure
- The Elevator Gear for deformation

Procedure

Enter dC330 [012-061] Elevator Motor Down and [012-060] Elevator Motor UP (PL 21.4), alternately. Select Start. **The Elevator Motor runs.**

Y N

Select **Stop.** Go to BSD 12.57 Professional Finisher Stacker Drive Check continuity between the Elevator Motor and Finisher PWB. **The continuity check is OK.**

Y N

Repair the open circuit or short circuit.

Replace the Elevator Motor (PL 21.4). If the problem continues, replace the Finisher PWB (PL 21.12).

Select **Stop.** If the problem continues, replace the Finisher PWB (PL 21.12).

312-212 (Pro) Stacker Upper Limit Fault

BSD-ON:BSD 12.57 Professional Finisher Stacker Drive

When Stack Height Sensor 2 On was detected after the Stacker Tray had started lifting up.

Initial Actions

Check Items

- The Upper Limit SW for improper installation
- The Upper Limit SW connectors for connection failure
- The Elevator Motor for operation failure
- The Elevator Motor connectors for connection failure

Procedure

Enter dC330 [012-061] Elevator Motor Down and [012-060], Elevator Motor UP (PL 21.4), alternately. Select **Start**. **The Elevator Motor runs.**

Y N

Select **Stop.** Go to BSD 12.57 Professional Finisher Stacker Drive. Check continuity between the Elevator Motor and Finisher PWB. **The continuity check is OK.**

Y N

Repair the open circuit or short circuit.

Replace the Elevator Motor (PL 21.4). If the problem continues, replace the Finisher PWB (PL 21.12).

Select Stop. Select [012-262], Stacker No Paper Sensor (PL 21.4). Select **Start**. Block/unblock the Stacker No Paper Sensor. **The display changes.**

Y N

Select Stop. Go to BSD 12.57 Professional Finisher Stacker Drive. Check continuity between the Stacker No Paper Sensor and Finisher PWB. **The continuity check is OK.**

Y N

Repair the open circuit or short circuit.

Replace the Stacker No Paper Sensor (PL 21.4). If the problem continues, replace the Finisher PWB (PL 21.12).

Select [012-260], Upper Limit Sensor (PL 21.4). Block/unblock the Upper Limit Sensor. Select **Start. The display changes.**

Y N

Select Stop. Go to BSD 12.57 Professional Finisher Stacker Drive Check continuity between the Upper Limit Sensor and Finisher PWB. **The continuity check is OK.**

Y N

Repair the open circuit or short circuit.

Replace the Upper Limit Sensor (PL 21.4). If the problem continues, replace the Finisher PWB (PL 21.12).

Select **Stop.** If the problem continues, replace the Finisher PWB (PL 21.12).

312-213 (Pro) Stacker Lower Limit Fault

BSD-ON: BSD 12.58 Professional Finisher Stack Height Detection

When Lower Limit Sensor On was detected after the Stacker Tray had started driving down.

Initial Actions

Check Items

- The Upper Limit SW for improper installation
- The Upper Limit SW connectors for connection failure
- The Elevator Motor for operation failure
- The Elevator Motor connectors for connection failure

Procedure

Enter dC330 [012-061] Elevator Motor Down and [012-060] Elevator Motor UP (PL 21.4), alternately. Select **Start**. **The Elevator Motor runs.**

Y N

Select **Stop.** Go to BSD 12.57 Professional Finisher Stacker Drive Check continuity between the Elevator Motor and Finisher PWB. **The continuity check is OK.**

Y N

Repair the open circuit or short circuit.

Replace the Elevator Motor (PL 21.4). If the problem continues, replace the Finisher PWB (PL 21.12).

Select **Stop.** If the problem continues, replace the Finisher PWB (PL 21.12).

312-221 (Pro) Front Tamper Home Sensor On Fault

BSD-ON:BSD 12.52 Professional Finisher Tamper Control

The Front Tamper Home Sensor did not turn On within the specified time after the Tamper Motor had started running.

Initial Actions

Check the following:

- Front Tamper Actuator for deformation
- Front Tamper Home Sensor for proper installation
- Front Tamper Home Sensor connectors
- Front Tamper Motor for proper operation
- Front Tamper Motor connectors

Procedure

Enter dC330 [012-020] and [012-023], Front Tamper Motor (PL 21.8), alternately. **Select Start. The Front Tamper Motor runs.**

Y N

Select Stop. Go to BSD 12.52 Professional Finisher Tamper Control Check circuit of the Front Tamper Motor. Refer to OF 99-9 RAP for troubleshooting procedure.

Select Stop. Select [012-220], Front Tamper Home Sensor (PL 21.8). Select **Start**. Actuate the sensor with a piece of paper. **The display changes.**

Y N

Select Stop. Go to BSD 12.52 Professional Finisher Tamper Control. Check circuit of the Front Tamper Home Sensor. Refer to OF 99-2 RAP for troubleshooting procedure.

Select **Stop.** If the problem continues, replace the Finisher PWB (PL 21.12).

312-223(Pro) Front Tamper Home Sensor Off Fault

BSD-ON:BSD 12.52 Professional Finisher Tamper Control

Front Tamper Home Sensor is not turned off within a specified time. Front Tamper Home Sensor is not turned off after the stop following Front Tamper Home Sensor Off.

Initial Actions

Check the following:

- Front Tamper Actuator for deformation
- Front Tamper Home Sensor for proper installation
- Front Tamper Home Sensor connectors
- Front Tamper Motor for proper operation
- Front Tamper Motor connectors

Procedure

Enter dC330 [012-020] and [012-023], Front Tamper Motor (PL 21.8), alternately. **Select Start. The Front Tamper Motor runs.**

Y N

Select Stop. Go to BSD 12.52 Professional Finisher Tamper Control Check circuit of the Front Tamper Motor. Refer to OF 99-9 RAP for troubleshooting procedure.

Select Stop. Select [012-220], Front Tamper Home Sensor (PL 21.8). Select **Start**. Actuate the sensor with a piece of paper. **The display changes.**

Y N

Select Stop. Go to BSD 12.52 Professional Finisher Tamper Control Check circuit of the Front Tamper Home Sensor. Refer to OF 99-2 RAP for troubleshooting procedure.

Select **Stop.** If the problem continues, replace the Finisher PWB (PL 21.12).

312-224 (Pro) Rear Tamper Home Sensor Off Fault

BSD-ON:BSD 12.52 Professional Finisher Tamper Control

Rear Tamper Home Sensor is not turned off within a specified time. Rear Tamper Home Sensor is not turned off after the stop following Rear Tamper Home Sensor Off.

Initial Actions

Check the following:

- Rear Tamper Actuator for deformation
- Rear Tamper Home Sensor for proper installation
- Rear Tamper Home Sensor connectors
- Rear Tamper Motor for proper operation
- Rear Tamper Motor connectors

Procedure

Enter dC330 [012-026] and [012-029], Rear Tamper Motor (PL 21.8), alternately. **Select Start. The Rear Tamper Motor runs.**

Y N

Select Stop. Go to BSD 12.52 Professional Finisher Tamper Control. Check circuit of the Rear Tamper Motor. Refer to OF 99-9 RAP for troubleshooting procedure.

Select Stop. Select [012-221], Rear Tamper Home Sensor (PL 21.8). Select **Start**. Actuate the sensor with a piece of paper. **The display changes.**

Y N

Select Stop. Go to BSD 12.52 Professional Finisher Tamper Control. Check circuit of the Rear Tamper Home Sensor. Refer to OF 99-2 RAP for troubleshooting procedure.

Select Stop. If the problem continues, replace the Finisher PWB (PL 21.12).

312-225 (Pro) Booklet Tamper F Home Sensor On Fault

BSD-ON: BSD 12.43 Booklet Tamper Control (2 of 2)

Tamper Home Sensor Front is not turned on within 1000msec from motor On while Booklet Tamper Front is returning to Home.

Initial Actions

- The Booklet Tamper Home Sensor Front for improper installation
- The Booklet Tamper Home Sensor Front connectors for connection failure
- The Booklet Tamper Motor Front connectors for connection failure
- The Booklet Tamper Motor Front for improper installation
- The gear part for wear or damage
- The Booklet Tamper Front for deformation

Procedure

Enter dC330 [013-048] Booklet Tamper Motor F Rear 1 and dC330 [013-052], Booklet Tamper Motor Front (PL 21.19), alternately. Select **Start**. **The Booklet Tamper Motor Front energizes.**

Y N

Select Stop. Go to BSD 12.42 Booklet Tamper Control (1 of 2) Check continuity between the Booklet Tamper Motor Front and the Booklet PWB and the Booklet PWB and the Finisher PWB. **The continuity check is OK.**

Y N

Repair the open circuit or short circuit.

Replace the Booklet Tamper Motor Front (PL 21.19). If the problem continues, replace the Booklet PWB (PL 21.13). If the problem persists, replace Finisher PWB (PL 21.12).

Select Stop. Select [013-134], Booklet Tamper Home Sensor Front (PL 21.19). Select **Start**. Block/unblock the Booklet Tamper Home Sensor Front. **The display changes.**

Y N

Select Stop. Go to BSD 12.43 Booklet Tamper Control (2 of 2) Check continuity between the Booklet Tamper Home Sensor Front and the Booklet PWB and the Booklet PWB and the Finisher PWB. **The continuity check is OK.**

Y N

Repair the open circuit or short circuit.

Replace the Booklet Tamper Home Sensor Front (PL 21.19). If the problem continues, replace the Booklet PWB (PL 21.13). If the problem persists, replace Finisher PWB (PL 21.12).

Select Stop. If the problem continues, replace the Finisher PWB (PL 21.12).

312-226 (Pro) Booklet Tamper F Home Sensor Off Fault

BSD-ON:BSD 12.43 Booklet Tamper Control (2 of 2)

Even when Booklet tamper Front motor outputs 75pulse, Tamper Front Home Sensor is not turned off.

Initial Actions

- The Booklet Tamper Home Sensor Front for improper installation
- The Booklet Tamper Home Sensor Front connectors for connection failure
- The Booklet Tamper Motor Front connectors for connection failure
- The Booklet Tamper Motor Front for improper installation
- The gear part for wear or damage
- The Booklet Tamper Front for deformation

Procedure

Enter dC330 [013-048] Booklet Tamper Motor F Rear 1 and dC330 [013-052], Booklet Tamper Motor Front (PL 21.19), alternately. Select **Start**. **The Booklet Tamper Motor Front energizes.**

Y N

Select Stop. Go to BSD 12.42 Booklet Tamper Control (1 of 2) Check continuity between the Booklet Tamper Motor Front and the Booklet PWB and the Booklet PWB and the Finisher PWB. **The continuity check is OK.**

Y N

Repair the open circuit or short circuit.

Replace the Booklet Tamper Motor Front (PL 21.19). If the problem continues, replace the Booklet PWB (PL 21.13). If the problem persists, replace Finisher PWB (PL 21.12).

Select Stop. Select [013-134], Booklet Tamper Home Sensor Front (PL 21.19). Select **Start**. Block/unblock the Booklet Tamper Home Sensor Front. **The display changes.**

Y N

Select Stop. Go to BSD 12.43 Booklet Tamper Control (2 of 2). Check continuity between the Booklet Tamper Home Sensor Front and the Booklet PWB and the Booklet PWB and the Finisher PWB. **The continuity check is OK.**

Y N

Repair the open circuit or short circuit.

Replace the Booklet Tamper Home Sensor Front (PL 21.19). If the problem continues, replace the Booklet PWB (PL 21.13). If the problem persists, replace Finisher PWB (PL 21.12).

Select Stop. If the problem continues, replace the Finisher PWB (PL 21.12).

312-227 (Pro) Booklet End Guide Home Sensor Off Fault

BSD-ON: BSD 12.46 Booklet End Guide Control

Even when Booklet End Guide motor outputs 200 pulse after the start, Booklet End Guide Home Sensor is not turned off.

Initial Actions

- The Booklet End Guide Home Sensor for improper installation
- The Booklet End Guide Home Sensor connectors for connection failure
- The Booklet End Guide Motor connectors for connection failure
- The Guide for deformation
- The Guide for a foreign substance

Procedure

Enter dC330 [013-013] and [013-016], Booklet End Guide Motor (PL 21.17), alternately. Select **Start**. **The Booklet End Guide Motor energizes.**

Y N

Select Stop. Go to BSD 12.46 Booklet End Guide Control. Check continuity between the Booklet End Guide Motor and the Booklet PWB and the Booklet PWB and the Finisher PWB. **The continuity check is OK.**

Y N

Repair the open circuit or short circuit.

Replace the Booklet End Guide Motor (PL 21.17). If the problem continues, replace the Booklet PWB (PL 21.13). If the problem persists, replace Finisher PWB (PL 21.12).

Select Stop. Select [013-137] Booklet End Guide Home Sensor. Block/unblock the Booklet End Guide Home Sensor to the light with paper strip. Select **Start**. **The display changes.**

Y N

Select Stop. Go to BSD 12.46 Booklet End Guide Control. Check continuity between the Booklet End Guide Home Sensor and the Booklet PWB and the Booklet PWB and the Finisher PWB. **The continuity check is OK.**

Y N

Repair the open circuit or short circuit.

Replace the Booklet End Guide Home Sensor (PL 21.17). If the problem continues, replace the Booklet PWB (PL 21.13). If the problem persists, replace Finisher PWB (PL 21.12).

Check the following:

- The Booklet End Guide Motor for proper installation
- Booklet End Guide Belt for proper tension
- Booklet End Guide Belt for wear or damage

If the above checks are OK, replace the Finisher PWB (PL 21.12).

312-228 (Pro) Booklet End Guide Home Sensor On Fault

BSD-ON: BSD 12.46 Booklet End Guide Control

Booklet End Guide Home Sensor is not turned on within 2000ms from motor On while Booklet End Guide is returning to Home.

Initial Actions

- The Booklet End Guide Home Sensor for improper installation
- The Booklet End Guide Home Sensor connectors for connection failure
- The Booklet End Guide Motor connectors for connection failure
- The Guide for deformation
- The Guide for a foreign substance

Procedure

Enter dC330 [013-013] and [013-016], Booklet End Guide Motor (PL 21.17), alternately. Select **Start**. **The Booklet End Guide Motor energizes.**

Y N

Select Stop. Go to BSD 12.46 Booklet End Guide Control. Check continuity between the Booklet End Guide Motor and the Booklet PWB and the Booklet PWB and the Finisher PWB. **The continuity check is OK.**

Y N

Repair the open circuit or short circuit.

Replace the Booklet End Guide Motor (PL 21.17). If the problem continues, replace the Booklet PWB (PL 21.13). If the problem persists, replace Finisher PWB (PL 21.12).

Select Stop. Enter dC330 [013-137] Booklet End Guide Home Sensor. Select **Start**. Block/unblock the Booklet End Guide Home Sensor. **The display changes.**

Y N

Select Stop. Go to BSD 12.46 Booklet End Guide Control. Check continuity between the Booklet End Guide Home Sensor and the Booklet PWB and the Booklet PWB and the Finisher PWB. **The continuity check is OK.**

Y N

Repair the open circuit or short circuit.

Replace the Booklet End Guide Home Sensor (PL 21.17). If the problem continues, replace the Booklet PWB (PL 21.13). If the problem persists, replace Finisher PWB (PL 21.12).

Check the following:

- The Booklet End Guide Motor for proper installation
- Booklet End Guide Belt for proper tension
- Booklet End Guide Belt for wear or damage

If the above checks are OK, replace the Finisher PWB (PL 21.12).

312-229 (Pro) Booklet Tamper R Home Sensor On Fault

BSD-ON:BSD 12.43 Booklet Tamper Control (2 of 2)

Tamper Home Sensor Rear is not turned on within 1000msec from motor On while Booklet Tamper Rear is returning to Home.

Initial Actions

- The Booklet Tamper Home Sensor Rear for improper installation
- The Booklet Tamper Home Sensor Rear connectors for connection failure
- The Booklet Tamper Motor Rear connectors for connection failure
- The Booklet Tamper Motor Rear for improper installation
- The gear part for wear or damage
- The Booklet Tamper Rear for deformation

Procedure

Enter dC330 [013-056] and dC330 [013-060], Booklet Tamper Motor Rear (PL 21.19), alternately. Select **Start**. **The Booklet Tamper Motor Rear energizes.**

Y N

Select Stop. Go to BSD 12.42 Booklet Tamper Control (1 of 2). Check continuity between the Booklet Tamper Motor Rear and the Booklet PWB and the Booklet PWB and the Finisher PWB. **The continuity check is OK.**

Y N

Repair the open circuit or short circuit.

Replace the Booklet Tamper Motor Rear (PL 21.19). If the problem continues, replace the Booklet PWB (PL 21.13). If the problem persists, replace Finisher PWB (PL 21.12).

Select Stop. Select [013-136], Booklet Tamper Home Sensor. Select **Start**. Block/unblock the Booklet Tamper Home Sensor Front. **The display changes.**

Y N

Select Stop. Go to BSD 12.43 Booklet Tamper Control (2 of 2). Check continuity between the Booklet Tamper Home Sensor Rear and the Booklet PWB and the Booklet PWB and the Finisher PWB. **The continuity check is OK.**

Y N

Repair the open circuit or short circuit.

Replace the Booklet Tamper Home Sensor Rear (PL 21.19). If the problem continues, replace the Booklet PWB (PL 21.13). If the problem persists, replace Finisher PWB (PL 21.12).

Select Stop. If the problem continues, replace the Finisher PWB (PL 21.12).

312-230 (Pro) Booklet Tamper R Home Sensor Off Fault

BSD-ON:BSD 12.43 Booklet Tamper Control (2 of 2)

Even when Booklet tamper Rear motor outputs 75pulse, Tamper Rear Home Sensor is not turned off.

Initial Actions

- The Booklet Tamper Home Sensor Rear for improper installation
- The Booklet Tamper Home Sensor Rear connectors for connection failure
- The Booklet Tamper Motor Rear connectors for connection failure
- The Booklet Tamper Motor Rear for improper installation
- The gear part for wear or damage
- The Booklet Tamper Rear for deformation

Procedure

Enter dC330 [013-056] and [013-060], Booklet Tamper Motor Rear (PL 21.19), alternately. Select **Start**. **The Booklet Tamper Motor Rear energizes.**

Y N

Select Stop. Go to BSD 12.42 Booklet Tamper Control (1 of 2) Check continuity between the Booklet Tamper Motor Rear and the Booklet PWB and the Booklet PWB and the Finisher PWB. **The continuity check is OK.**

Y N

Repair the open circuit or short circuit.

Replace the Booklet Tamper Motor Rear (PL 21.19). If the problem continues, replace the Booklet PWB (PL 21.13). If the problem persists, replace Finisher PWB (PL 21.12).

Select Stop. Select [013-136], Booklet Tamper Home Sensor (PL 21.19). Select **Start**. Block/unblock the Booklet Tamper Home Sensor Front. **The display changes.**

Y N

Select Stop. Go to BSD 12.43 Booklet Tamper Control (2 of 2) Check continuity between the Booklet Tamper Home Sensor Rear and the Booklet PWB and the Booklet PWB and the Finisher PWB. **The continuity check is OK.**

Y N

Repair the open circuit or short circuit.

Replace the Booklet Tamper Home Sensor Rear (PL 21.19). If the problem continues, replace the Booklet PWB (PL 21.13). If the problem persists, replace Finisher PWB (PL 21.12).

Select Stop. If the problem continues, replace the Finisher PWB (PL 21.12).

312-232 (Pro) Puncher Home Sensor Off Fault

BSD-ON: BSD 12.50 Professional Finisher Punch Hole Control

The Puncher Home Sensor did not turn Off within 100 msec. after the Puncher Motor had started running.

Initial Actions

Check the following:

- Puncher Home Actuator for deformation
- Puncher Home Sensor for proper installation
- Puncher Home Sensor connectors
- Puncher Motor for proper operation
- Puncher Motor connectors

Procedure

Enter dC330 [012-078] and [012-075], Puncher Motor (PL 21.5), alternately. **Select Start. The Puncher Motor runs.**

Y N

Select Stop. Go to BSD 12.49 Professional Finisher Punch Drive. Check circuit of the Punch Motor. Refer to OF 99-9 RAP for troubleshooting procedure.

Select Stop. Select [012-271], Puncher Home Sensor (PL 21.5). Select **Start**. Actuate the sensor with a piece of paper. **The display changes.**

Y N

Select Stop. Go to BSD 12.50 Professional Finisher Punch Hole Control. Check circuit of the Puncher Home Sensor. Refer to OF 99-2 RAP for troubleshooting procedure.

Select Stop. If the problem continues, replace the Finisher PWB (PL 21.12).

312-243 (Pro) Booklet Knife Home Sensor On Fault

BSD-ON: BSD 12.44 Booklet Knife Control

Knife Home Sensor is not turned on after the lapse of 500ms from Clutch On while Booklet Knife is returning to Home.

Initial Actions

- The Knife Home Sensor for improper installation
- The Knife Home Sensor connectors for connection failure
- The Booklet Fold Motor connectors for connection failure
- The Knife Clutch connectors for connection failure
- The Knife Clutch for improper installation
- The Knife drive mechanism for a foreign substance

Procedure

Manually move the Booklet Tamper to both ends. Enter dC330 [013-008] and [013-009], Booklet Folder Roll Motor (PL 21.22), alternately. Select **Start**. **The Booklet Folder Roll Motor energizes.**

Y N

Select Stop. Go to BSD 12.40 Booklet Drive. Check continuity between the Booklet Folder Roll Motor and the Booklet PWB and between the Booklet PWB and the Finisher PWB. **The continuity check is OK.**

Y N

Repair the open circuit or short circuit.

Replace the Booklet Folder Roll Motor (PL 21.22). If the problem continues, replace the Booklet PWB (PL 21.13). If the problem persists, replace Finisher PWB (PL 21.12).

Select Stop. Select [013-010], Knife Solenoid, (PL 21.22). Select **Start**. **The Knife Solenoid actuates.**

Y N

Select Stop. Go to BSD 12.44 booklet Knife Control. Check continuity between the Knife Solenoid and the Booklet PWB and between the Booklet PWB and the Finisher PWB. **The continuity check is OK.**

Y N

Repair the open circuit or short circuit.

Replace the Knife Solenoid (PL 21.22). If the problem continues, replace the Booklet PWB (PL 21.13). If the problem persists, replace Finisher PWB (PL 21.12).

Select **Stop**. Select [013-101], Booklet Knife Home Sensor (PL 21.18). Select **Start**. Block/unblock the Knife Home Sensor. **The display changed.**

Y N

Select Stop. Go to BSD 12.44 Booklet Knife Control. Check continuity between the Knife Home Sensor and the Booklet PWB and between the Booklet PWB and the Finisher PWB. **The continuity check is OK.**

Y N

Repair the open circuit or short circuit.

A B

A B

Replace the Knife Home Sensor (PL 21.18). If the problem continues, replace the Booklet PWB (PL 21.13). If the problem persists, replace Finisher PWB (PL 21.12).

Select Stop. If the problem continues, replace the Finisher PWB (PL 21.12).

312-246 (Pro) Booklet Stapler Fault

BSD-ON:BSD 12.45 Booklet Staple Control

Error signal On and Ready signal Off output from the Booklet Stapler were detected after Booklet Stapling operation.

The Stapler Ready signal did not turn to 'Not Ready' within the specified time after Booklet Stapler Start signal On.

Error signal On and Ready signal Off output from the Booklet Stapler were detected after Stapler Power On check was performed at Power On or when the interlock was closed.

Error signal On was detected just before the Booklet Stapling operation.

Procedure

Check continuity between the Staple and Booklet PWB. **The continuity check is OK.**

Y N

Repair the open circuit or short circuit.

Go to Figure 1. Check continuity between the Booklet PWB and Finisher PWB. **The continuity check is OK.**

Y N

Repair the open circuit or short circuit.

Replace the Stapler (PL 21.16). The problem is resolved.

Y N

Replace the Booklet PWB (PL 21.13). If the problem continues, replace the Finisher PWB (PL 21.12).

If the problem continues, replace the Finisher PWB (PL 21.12).

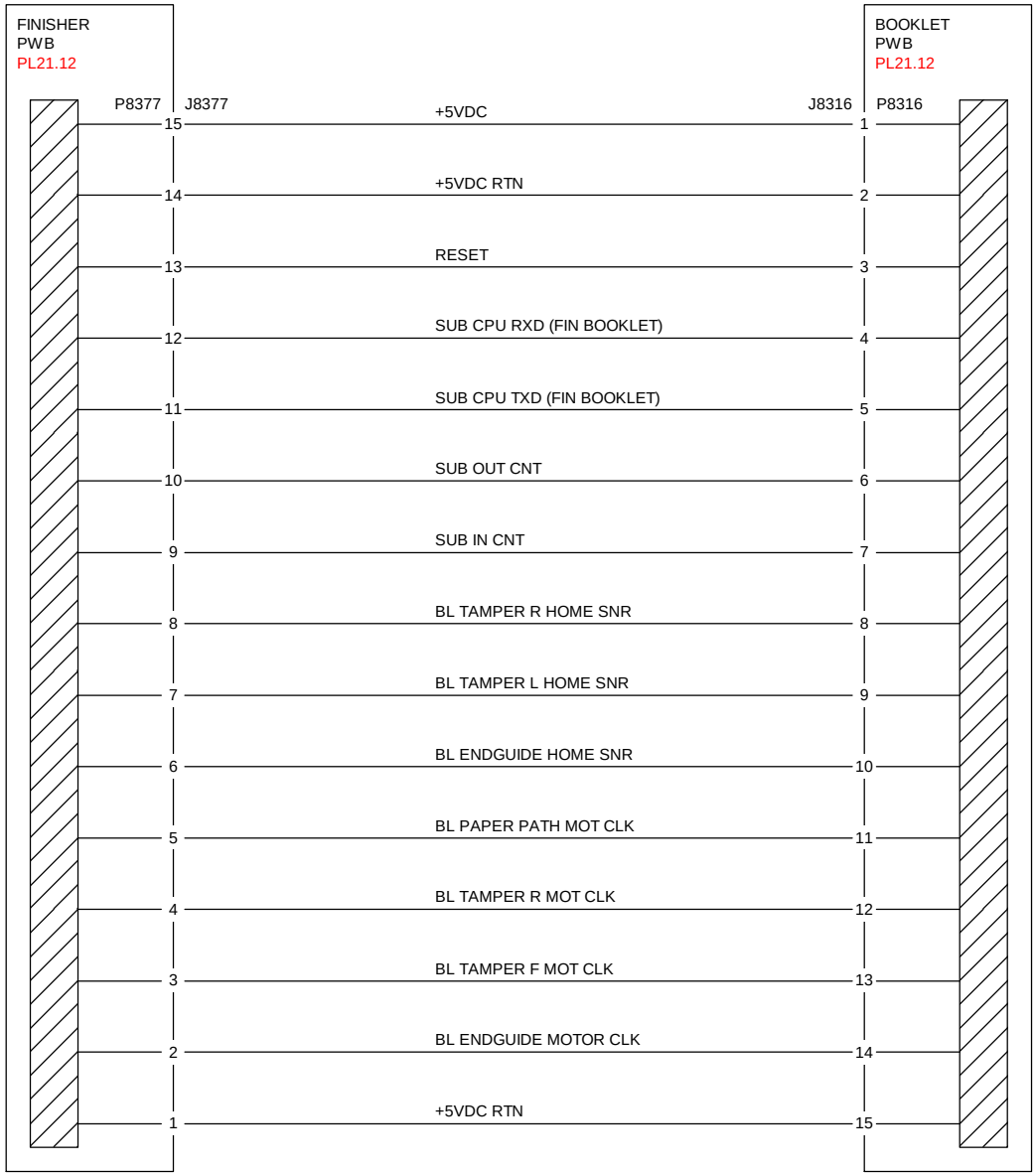

T712143A-COP.VSD.

Figure 1 Finisher, Booklet PWBs

312-247 (Pro) Side Registration Sensor Off Fault

BSD-ON: BSD 12.37 Professional Finisher Booklet/Punch Transport

Side Registration Sensor not turned off after the lapse of 500msec from operation start. Side Registration Sensor is not turned off after the stop following Side Registration Sensor Off. Target Side Registration Sensor1 or Side Registration Sensor2 is not turned off at operation start.

Initial Actions

- The Actuator for deformation
- The Side Reg 1 and 2 Sensors for improper installation
- The Side Reg 1 and 2 Sensors connectors for connection failure
- The Puncher Move Motor connectors for connection failure

Procedure

Enter dC330 [012-071] and [012-073], Puncher Move Motor (PL 21.5), alternately. Select **Start**. **The Puncher Move Motor run.**

Y N

Select Stop. Go to BSD 12.49 Professional Finisher Punch Drive. Check continuity between the Puncher Move Motor and Finisher PWB. **The continuity check is OK.**

Y N

Repair the open circuit or short circuit.

Replace the Puncher Move Motor (PL 21.5). If the problem continues, replace the Finisher PWB (PL 21.12).

Select Stop. Select [012-200], Side Registration 1 Sensor (PL 21.5). Select **Start**. Block/unblock the Side Reg 1 Sensor. **The display changes.**

Y N

Select Stop. Go to BSD 12.37 Professional Finisher Booklet/Punch Transport. Check continuity between the Side Reg 1 Sensor and Finisher PWB. **The continuity check is OK.**

Y N

Repair the open circuit or short circuit.

Replace the Side Reg 1 Sensor (PL 21.5). If the problem continues, replace the Finisher PWB (PL 21.12).

Select [012-201], Side Reg 2 Sensor (PL 21.5). Select **Start**. Block/unblock the Side Reg 2 Sensor. **The display changes.**

Y N

Select Stop. Go to BSD 12.37 Professional Finisher Booklet/Punch Transport. Check continuity between the Side Reg 2 Sensor and Finisher PWB. **The continuity check is OK.**

Y N

Repair the open circuit or short circuit.

Replace the Side Reg 2 Sensor (PL 21.5). If the problem continues, replace the Finisher PWB (PL 21.12).

Select Stop. Check the following:

- The Puncher Move Motor Belt for improper tension
- The Puncher Move Motor Belt for disengagement

If the above checks are OK, replace the Finisher PWB (PL 21.12).

312-258 (Pro) Booklet Broken

The specified number of Booklet Set Recoveries were detected in the same Job. (The specified number is 5 by default. The setting can be changed in NVM.)

Procedure

Check the setting value in NVM. Perform the process again. **The Fault Code reoccurs.**

Y **N**

If the problem continues, replace the Finisher PWB (PL 21.12).

If the problem continues, replace the Finisher PWB (PL 21.12).

312-260 (Pro) Eject Clamp Home Sensor On Fault

BSD-ON: BSD 12.55 Professional Finisher Eject Drive

Eject Clamp Home Sensor is not turned on within a specified time.

Initial Actions

- Check for obstructions in the Clamp area

Procedure

Enter dC330 [012-250], Eject Clamp Home Sensor (PL 21.7). Select **Start**. Actuate the Eject Clamp Home Sensor. **The display changes.**

Y **N**

Select Stop. Go to BSD 12.55 Professional Finisher Eject Drive. Check the circuit of the Eject Clamp Home Sensor. Refer to the OF 99-2 RAP for troubleshooting procedure.

Select [012-052], Eject Clamp Motor (PL 21.7). Select **Start**. **The Eject Clamp moves up.**

Y **N**

The Eject Motor energized.

Y **N**

Select Stop. Go to BSD 12.55 Professional Finisher Eject Drive. Check the circuit of the Eject Clamp Motor. Refer to the OF 99-9 RAP for troubleshooting procedure.

Check the Eject Clamp Motor and its associated gears, pulleys and belts for damage, contamination and misalignment (PL 21.7).

Select Stop.

Check the following:

- Ensure that the Eject Clamp Home Sensor connectors are securely connected and that the wires are not damaged
- Ensure that the Eject Clamp Motor connectors are securely connected and that the wires are not damaged

If the above checks are OK, replace the Eject Clamp Home Sensor (PL 21.7). If the problem persists, replace the Finisher PWB (PL 21.12).

312-261 (Pro) Booklet Knife Folding Sensor Fault

BSD-ON: BSD 12.44 booklet Knife Control

When the Booklet Knife performs folding operation, the Knife Folding Sensor did not turn On within 400 msec after Knife Solenoid On.

Initial Actions

- The Knife Folding Sensor for improper installation
- The Knife Folding Sensor connectors for connection failure
- The Booklet Fold Motor connectors for connection failure
- The Knife Solenoid connectors for connection failure
- The Knife Solenoid for improper installation
- The Knife drive mechanism for a foreign substance

Procedure

Manually move the Booklet Tamper to both ends. Enter dC330 [013-008] and [013-009], Booklet Folder Roll Motor (PL 21.22), alternately. Select **Start**. **The Booklet Folder Roll Motor energizes.**

Y N

Select Stop. Go to BSD 12.40 Booklet Drive. Check continuity between the Booklet Folder Roll Motor and the Booklet PWB and between the Booklet PWB and the Finisher PWB. **The continuity check is OK.**

Y N

Repair the open circuit or short circuit.

Replace the Booklet Folder Roll Motor (PL 21.22). If the problem continues, replace the Booklet PWB (PL 21.13). If the problem persists, replace Finisher PWB (PL 21.12).

Select Stop. Select dC330 [013-010], Knife Solenoid, (PL 21.22). Select **Start**. **The Knife Solenoid actuates.**

Y N

Select Stop. Go to BSD 12.44 booklet Knife Control. Check continuity between the Knife Solenoid and the Booklet PWB and between the Booklet PWB and the Finisher PWB. **The continuity check is OK.**

Y N

Repair the open circuit or short circuit.

Replace the Knife Solenoid (PL 21.22). If the problem continues, replace the Booklet PWB (PL 21.13). If the problem persists, replace Finisher PWB (PL 21.12).

Select **Stop**. Select dC330 [013-101], Booklet Knife Home Sensor (PL 21.18). Select **Start**. Block/unblock the Knife Home Sensor. **The display changed.**

Y N

Select Stop. Go to BSD 12.44 booklet Knife Control. Check continuity between the Knife Home Sensor and the Booklet PWB and between the Booklet PWB and the Finisher PWB. **The continuity check is OK.**

Y N

Repair the open circuit or short circuit.

A B

Replace the Knife Home Sensor (PL 21.18). If the problem continues, replace the Booklet PWB (PL 21.13). If the problem persists, replace Finisher PWB (PL 21.12).

Select Stop. If the problem continues, replace the Finisher PWB (PL 21.12).

312-263 (Pro) Rear Tamper Home Sensor On Fault

BSD-ON:BSD 12.52 Professional Finisher Tamper Control

The Rear Tamper Home Sensor did not turn On within the specified time after the Tamper Motor had started running.

Initial Actions

Check the following:

- Rear Tamper Actuator for deformation
- Rear Tamper Home Sensor for proper installation
- Rear Tamper Home Sensor connectors
- Rear Tamper Motor for proper operation
- Rear Tamper Motor connectors

Procedure

Enter dC330 [012-026] and [012-029], Rear Tamper Motor (PL 21.8), alternately. **Select Start. The Rear Tamper Motor runs.**

Y N

Select Stop. Go to BSD 12.52 Professional Finisher Tamper Control Check circuit of the Rear Tamper Motor. Refer to OF 99-9 RAP for troubleshooting procedure.

Select Stop. Select [012-221], Rear Tamper Home Sensor (PL 21.8). Select **Start**. Actuate the sensor with a piece of paper. **The display changes.**

Y N

Select Stop. Go to BSD 12.52 Professional Finisher Tamper Control Check circuit of the Rear Tamper Home Sensor. Refer to OF 99-2 RAP for troubleshooting procedure.

Select Stop. If the problem continues, replace the Finisher PWB (PL 21.12).

312-264 (Pro) Booklet Drawer Broken Fault

BSD-ON:BSD 12.40 Booklet Drive

Booklet Drawer Set Sensor Open was detected when the Finisher Front Door Interlock was closed.

Initial Actions

- The Booklet Drawer Set Sensor for improper installation
- The Booklet Drawer Set Sensor connectors for connection failure
- The Booklet Drawer Actuator part for a foreign substance and deformation
- The Drawer mechanism for a foreign substance and deformation

Procedure

Enter dC330 [013-104], Booklet Drawer Set Sensor (PL 21.15). Select **Start**. Remove and insert the Booklet Drawer manually. **The display changes.**

Y N

Go to BSD 12.40 Booklet Drive. Check the circuit of the Booklet Drawer Set Sensor. Refer to the OF 99-2 RAP for troubleshooting procedure.

Select Stop. If the problem continues, replace the Finisher PWB (PL 21.12).

312-265 (Pro) Booklet Knife Home Sensor Off Fault

BSD-ON: BSD 12.44 booklet Knife Control

When the Booklet Knife moves from Home position, the Knife Home Sensor did not turn Off within the specified time after Knife Solenoid On.

Initial Actions

- The Knife Home Sensor for improper installation
- The Knife Home Sensor connectors for connection failure
- The Booklet Fold Motor connectors for connection failure
- The Knife Solenoid connectors for connection failure
- The Knife Solenoid for improper installation
- The Knife drive mechanism for a foreign substance

Procedure

Manually move the Booklet Tamper to both ends. Enter dC330 [013-008] and [013-009], Booklet Folder Roll Motor (PL 21.22), alternately. Select **Start**. **The Booklet Folder Roll Motor energizes.**

Y N

Select Stop. Go to BSD 12.40 Booklet Drive. Check continuity between the Booklet Folder Roll Motor and the Booklet PWB and between the Booklet PWB and the Finisher PWB. **The continuity check is OK.**

Y N

Repair the open circuit or short circuit.

Replace the Booklet Folder Roll Motor (PL 21.22). If the problem continues, replace the Booklet PWB (PL 21.13). If the problem persists, replace Finisher PWB (PL 21.12).

Select Stop. Select dC330 [013-010], Booklet Knife Solenoid, (PL 21.22). Select **Start**. **The Knife Solenoid actuates.**

Y N

Select Stop. Go to BSD 12.44 Booklet Knife Control. Check continuity between the Knife Solenoid and the Booklet PWB and between the Booklet PWB and the Finisher PWB. **The continuity check is OK.**

Y N

Repair the open circuit or short circuit.

Replace the Knife Solenoid (PL 21.22). If the problem continues, replace the Booklet PWB (PL 21.13). If the problem persists, replace Finisher PWB (PL 21.12).

Select Stop. Select dC330 [013-140], Booklet Knife Folding Sensor (PL 21.18). Select Start. Block/unblock the Knife Folding Sensor. The display changed.

Y N

Select Stop. Go to BSD 12.44 booklet Knife Control. Check continuity between the Knife Folding Sensor and the Booklet PWB and between the Booklet PWB and the Finisher PWB. **The continuity check is OK.**

Y N

Repair the open circuit or short circuit.

A B

Replace the Knife Folding Sensor (PL 21.18). If the problem continues, replace the Booklet PWB (PL 21.13). If the problem persists, replace Finisher PWB (PL 21.12).

Select Stop. If the problem continues, replace the Finisher PWB (PL 21.12).

A B

312-266 (Pro) Booklet Compiler No Paper Sensor Fault

BSD-ON:BSD 12.51 Professional Finisher Compiling

The Booklet Compile No Paper Sensor did not turn On within the specified time.

Procedure

Enter dC330 [013-102], Booklet Compile No Paper Sensor (PL 21.18). Select **Start**. Block/unblock the Booklet Compile No Paper Sensor. **The display changed.**

Y **N**

Select Stop. Go to BSD 12.51 Professional Finisher Compiling. Check continuity between the Booklet Compile No Paper and the Booklet PWB and between the Booklet PWB and the Finisher PWB. **The continuity check is OK.**

Y **N**

Repair the open circuit or short circuit.

Replace the Booklet Compile No Paper Sensor (PL 21.18). If the problem continues, replace the Booklet PWB (PL 21.13). If the problem persists, replace Finisher PWB (PL 21.12).

Select [013-064], Booklet Paper Path Motor (PL 21.22). Select **Start**. **The Motor energizes.**

Y **N**

Select Stop. Go to BSD 12.40 Booklet Drive. Check continuity between the Booklet Paper Path Motor and the Booklet PWB and between the Booklet PWB and the Finisher PWB. **The continuity check is OK.**

Y **N**

Repair the open circuit or short circuit.

Replace the Booklet Paper Path Motor (PL 21.22). If the problem continues, replace the Booklet PWB (PL 21.13). If the problem persists, replace Finisher PWB (PL 21.12).

Select Stop. If the problem persists, replace Finisher PWB (PL 21.12).

312-269 (Pro) Booklet Sub-CPU Communications Fault

BSD-ON:BSD 12.31 Professional Finisher PWB Communication

Communications between the Finisher PWB and the Booklet PWB Failed

Initial Actions

- Check the connectors at the Finisher PWB and the Booklet PWB are connected or seated properly (Figure 1)
- Check the wiring between the Finisher PWB and the Booklet PWB for damage (Figure 1)

Procedure

Power Off and Power On the Printer. **The problem is resolved.**

Y **N**

Reload the Software. **The problem is resolved.**

Y **N**

Replace the Finisher PWB (PL 21.12). If the problem continues, replace the Booklet PWB (PL 21.13).

Rerun the job.

Rerun the job.

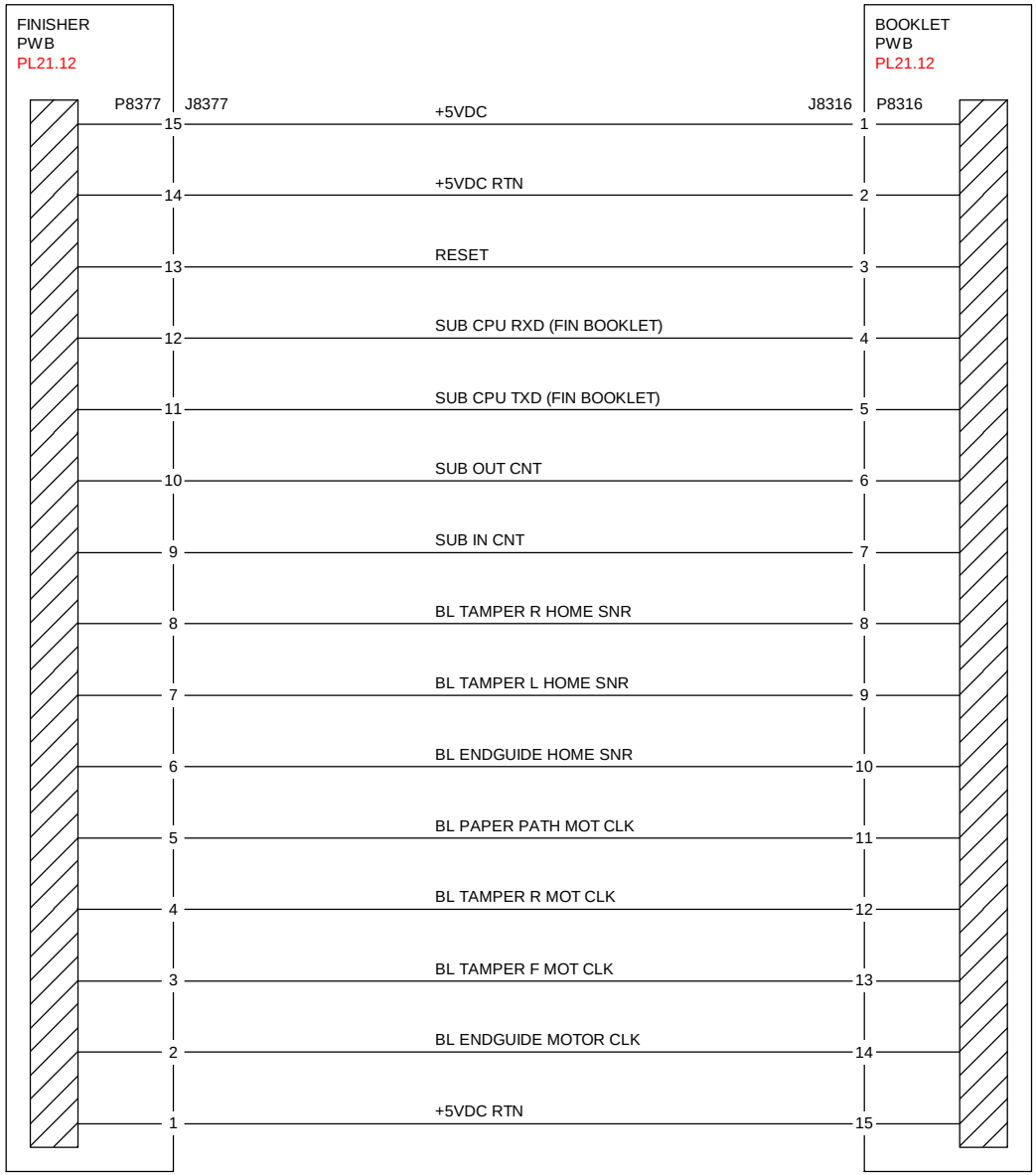

T712143A-COP.VSD.

Figure 1 Finisher, Booklet PWBs

312-282 (Pro) Eject Clamp Home Sensor Off Fault

BSD-ON: BSD 12.55 Professional Finisher Eject Drive

Eject Clamp Home Sensor is not turned off within a specified time.

Initial Actions

- Check for obstructions in the Clamp area

Procedure

Enter dC330 [012-250], Eject Clamp Home Sensor (PL 21.7). Select **Start**. Actuate the Eject Clamp Home Sensor. **The display changes.**

Y N

Select Stop. Go to BSD 12.55 Professional Finisher Eject Drive. Check the circuit of the Eject Clamp Home Sensor. Refer to the OF 99-2 RAP for troubleshooting procedure.

Select [012-052], Eject Clamp Motor (PL 21.7). Select **Start**. **The Eject Clamp moves up.**

Y N

The Eject Motor energized.

Y N

Select Stop. Go to BSD 12.55 Professional Finisher Eject Drive. Check the circuit of the Eject Clamp Motor. Refer to the OF 99-9 RAP for troubleshooting procedure.

Check the Eject Clamp Motor and its associated gears, pulleys and belts for damage, contamination and misalignment (PL 21.7).

Select Stop.

Check the

- Ensure that the Eject Clamp Home Sensor connectors are securely connected and that the wires are not damaged
- Ensure that the Eject Clamp Motor connectors are securely connected and that the wires are not damaged

If the above checks are OK, replace the Eject Clamp Home Sensor (PL 21.7). If the problem persists, replace the Finisher PWB (PL 21.12).

312-283 (Pro) Set Clamp Home Sensor On Fault

BSD-ON: BSD 12.56 Professional Finisher Set Clamp Control

Set Clamp Home Sensor is not turned on within a specified time.

Initial Actions

- Check for obstructions in the Clamp area

Procedure

Enter dC330 [012-250], Eject Clamp Home Sensor (PL 21.7). Select **Start**. Actuate the Eject Clamp Home Sensor. **The display changes.**

Y N

Select Stop. Go to BSD 12.56 Professional Finisher Set Clamp Control. Check the circuit of the Eject Clamp Home Sensor. Refer to the OF 99-2 RAP for troubleshooting procedure.

Select [012-052], Eject Motor (PL 21.8). Select **Start**. **The Eject moves up.**

Y N

The Eject Motor energized.

Y N

Select Stop. Go to BSD 12.55 Professional Finisher Eject Drive. Check the circuit of the Eject Motor. Refer to the OF 99-9 RAP for troubleshooting procedure.

Check the Eject Motor and its associated gears, pulleys and belts for damage, contamination and misalignment (PL 21.8).

Select Stop. The following codes will be stacked. Select [012-052], Eject Motor (PL 21.8). Select **Start**. Select [012-050], Set Clamp Clutch (PL 21.8). Select **Start**. **The Eject Roll Shaft rotates.**

Y N

The Set Clamp Clutch energized.

Y N

Select Stop. Go to BSD 12.56 Professional Finisher Set Clamp Control. Check the circuit of the Set Clamp Clutch. Refer to the OF 99-9 RAP for troubleshooting procedure.

Check the Set Clamp Clutch and its associated gears, pulleys and belts for damage, contamination and misalignment (PL 21.8).

Select Stop. Check the following:

- Ensure that the Eject Clamp Home Sensor connectors are securely connected and that the wires are not damaged
- Ensure that the Eject Motor connectors are securely connected and that the wires are not damaged

If the above checks are OK, replace the Eject Clamp Home Sensor (PL 21.7). If the problem persists, replace the Finisher PWB (PL 21.12).

312-284 (Pro) Set Clamp Home Sensor Off Fault

BSD-ON: BSD 12.56 Professional Finisher Set Clamp Control

Set Clamp Home Sensor is not turned off within a specified time.

Initial Actions

- Check for obstructions in the Clamp area

Procedure

Enter dC330 [012-250], Eject Clamp Home Sensor (PL 21.7). Select **Start**. Actuate the Eject Clamp Home Sensor. **The display changes.**

Y N

Select Stop. Go to BSD 12.56 Professional Finisher Set Clamp Control. Check the circuit of the Eject Clamp Home Sensor. Refer to the OF 99-2 RAP for troubleshooting procedure.

Select [012-052], Eject Motor (PL 21.8). Select **Start**. **The Eject moves up.**

Y N

The Eject Motor energized.

Y N

Select Stop. Go to BSD 12.55 Professional Finisher Eject Drive. Check the circuit of the Eject Motor. Refer to the OF 99-9 RAP for troubleshooting procedure.

Check the Eject Motor and its associated gears, pulleys and belts for damage, contamination and misalignment (PL 21.8).

Select Stop. Select [012-050], Set Clamp Clutch (PL 21.8). Select **Start**. **The Eject Roll Shaft rotates.**

Y N

The Set Clamp Clutch energized.

Y N

Select Stop. Go to BSD 12.56 Professional Finisher Set Clamp Control. Check the circuit of the Set Clamp Clutch. Refer to the OF 99-9 RAP for troubleshooting procedure.

Check the Set Clamp Clutch and its associated gears, pulleys and belts for damage, contamination and misalignment (PL 21.8).

Select Stop. Check the following:

- Ensure that the Eject Clamp Home Sensor connectors are securely connected and that the wires are not damaged
- Ensure that the Eject Motor connectors are securely connected and that the wires are not damaged

If the above checks are OK, replace the Eject Clamp Home Sensor (PL 21.7). If the problem persists, replace the Finisher PWB (PL 21.12).

312-291 (Pro) Stapler Fault

BSD-ON:BSD 12.53 Professional Finisher Stapler Control

The Staple Home Sensor has not switched from Off to On within the specified time after the Staple Motor had started rotating forward.

The Staple Home Sensor did not turn On within the specified time after the Staple Motor had started rotating backward.

Initial Actions

- Check the Stapler Head for obstructions

Procedure

Enter dC330 [012-042] and [012-043], Staple Motor, (PL 21.6), alternately. Select **Start**. **The Staple Motor runs.**

Y N

Select Stop. Go to BSD 12.53 Professional Finisher Stapler Control. Check continuity between the Stapler Head and Finisher PWB. **The continuity check is OK.**

Y N

Repair the open circuit or short circuit.

Replace the Stapler Head (PL 21.6). If the problem continues, replace the Finisher PWB (PL 21.12).

Select Stop. Select [012-244], Staple Home Sensor. Select [012-042] and [012-043], Staple Motor, (PL 21.6), alternately. Select **Start**. **The display changes.**

Y N

Select Stop. Go to BSD 12.53 Professional Finisher Stapler Control. Check continuity between the Stapler Home Sensor and Finisher PWB. **The continuity check is OK.**

Y N

Repair the open circuit or short circuit.

Replace the Stapler Head (PL21.6). If the problem continues, replace the Finisher PWB (PL 21.12).

Select Stop. Check the following:

- The wire between the Staple Head and the Finisher PWB for damage

If the above checks are OK, replace the Finisher PWB (PL 21.12).

312-295 (Pro) Stapler Move Position Sensor On Fault

BSD-ON: BSD 12.54 Professional Finisher Staple Positioning

Stapler Move Position Sensor is not turned on within a specified time.

Stapler Move Position Sensor not turned on when home operation is completed.

Stapler Move Position Sensor is not turned on after the stop following Stapler Move Position Sensor On.

Initial Actions

- Check Actuator for deformation
- Check Stapler Move Position Sensor for improper installation
- Check Stapler Move Position Sensor connectors for connection failure
- Check Staple Move Motor connectors for connection failure
- Check Staple Guide for deformation

Procedure

Enter dC330 [012-042] and [012-043], Stapler Move Motor (PL 21.6), alternately. Select **Start**. **The Staple Move Motor energizes.**

Y N

Select Stop. Go to BSD 12.54 Professional Finisher Staple Positioning. Check continuity between the Stapler Move Motor and Finisher PWB. **The continuity check is OK.**

Y N

Repair the open circuit or short circuit.

Replace the Staple Move Motor (PL 21.6). If the problem continues, replace the Finisher PWB (PL 21.12).

Select Stop. Select dC330 [012-241], Stapler Move Position Sensor (PL 21.6). Select **Start**. Block/unblock the Stapler Move Position Sensor. **The display changed.**

Y N

Select Stop. Go to BSD 12.54 Professional Finisher Staple Positioning. Check continuity between the Stapler Move Position Sensor and Finisher PWB. **The continuity check is OK.**

Y N

Repair the open circuit or short circuit.

Replace the Stapler Move Position Sensor (PL 21.6). If the problem continues, replace the Finisher PWB (PL 21.12).

Select Stop. Check the following:

- Obstructions on the Stapler Upper Rail
- Stapler Move Motor Gear

If the above checks are OK. replace the Finisher PWB (PL 21.12).

312-296 (Pro) Stapler Move Position Sensor Off Fault

BSD-ON: BSD 12.54 Professional Finisher Staple Positioning

Stapler Move Position Sensor is not turned off within a specified time

Stapler Move Position Sensor is not turned off when home operation is completed.

Stapler Move Position Sensor is not turned off after the stop following Stapler Move Position Sensor Off.

Initial Actions

- Check Actuator for deformation
- Check Stapler Move Position Sensor for improper installation
- Check Stapler Move Position Sensor connectors for connection failure
- Check Staple Move Motor connectors for connection failure
- Check Staple Guide for deformation
- Check to see if the shipping screw was removed from the stapler

Procedure

Enter dC330 [012-042] and [012-043], Stapler Move Motor (PL 21.6), alternately. Select **Start**. **The Staple Move Motor energizes.**

Y N

Select Stop. Go to BSD 12.54 Professional Finisher Staple Positioning. Check continuity between the Stapler Move Motor and Finisher PWB. **The continuity check is OK.**

Y N

Repair the open circuit or short circuit.

Replace the Staple Move Motor (PL 21.6). If the problem continues, replace the Finisher PWB (PL 21.12).

Select Stop. Select dC330 [012-241], Stapler Move Position Sensor (PL 21.6). Select **Start**. Block/unblock the Stapler Move Position Sensor. **The display changed.**

Y N

Select Stop. Go to BSD 12.54 Professional Finisher Staple Positioning. Check continuity between the Stapler Move Position Sensor and Finisher PWB. **The continuity check is OK.**

Y N

Repair the open circuit or short circuit.

Replace the Stapler Move Position Sensor (PL 21.6). If the problem continues, replace the Finisher PWB (PL 21.12).

Select Stop. Check the following:

- Obstructions on the Stapler Upper Rail
- Stapler Move Motor Gear

If the above checks are OK. replace the Finisher PWB (PL 21.12).

312-300 (Pro) Eject Cover Open

BSD-ON:BSD 12/29 Professional Finisher Interlocks

Eject Cover Switch open was detected.

Initial Actions

- Ensure that the Eject Cover is down
- Check Eject Cover Switch for improper installation
- Check Eject Cover Switch connectors for connection failure
- Check Actuator part for deformation

Procedure

Enter dC330 [012-300], Eject Cover Switch (PL 21.7). Select **Start**. Actuate the Eject Cover Switch. **The display changes**

Y N

Select Stop. Check continuity of the Eject Cover Switch. **The continuity check is OK.**

Y N

Replace the Eject Cover Switch (PL 21.7).

Go to BSD 12/29 Professional Finisher Interlocks Check continuity between the Eject Cover Switch and the Finisher PWB. If the check is OK, replace the Finisher PWB (PL 21.12).

Select Stop. If the problem continues, replace the Finisher PWB (PL 21.12).

312-302 (Pro) Finisher Front Door Interlock Open

BSD-ON:BSD 12/29 Professional Finisher Interlocks

Finisher Front Door Switch Open was detected.

Initial Actions

Check the following:

- Finisher Front Door Switch for proper installation
- Finisher Front Door Switch connectors for connection failure
- Actuator part for deformation
- Ensure that the Eject Cover is in the closed/down position

Procedure

Enter dC330 [012-302], Front Door Interlock Switch (PL 21.3). Select **Start**. Open and close the Front Door. **The display changes.**

Y N

Go to BSD 12.29 Professional Finisher Interlocks Disconnect P8314 on the Finisher PWB. **+5 VDC is measured between the Finisher PWB, P8314-2 and P8314-3.**

Y N

Replace the Finisher PWB (PL 21.12).

There is less than 5 ohms between P8314-3 and the finisher frame.

Y N

Replace the Finisher PWB (PL 21.12).

Go to BSD 12.29 Professional Finisher Interlocks Check the wires between the Finisher PWB, the Eject Cover Switch, and the Finisher Front Door Switch for an open circuit or poor contact.

If the wires are good, replace the Front Door Interlock Switch (PL 21.3).

Select Stop. Check the following:

- Alignment between the Front Door and the Front Door Interlock Switch
- Front Door and Front Cover for proper installation
- Actuator for damage or bent
- Magnet for proper mounting

If the above checks are OK, replace the Finisher PWB (PL 21.12).

312-303 (Pro) H-Transport Cover Open

BSD-ON: BSD 12.34 Horizontal Transportation (2 of 2)

H-Transport Interlock Sensor-L Open was detected.

Initial Actions

Check Items

- The H-Transport Interlock Sensor-L for improper installation
- Check for obstruction in between the H-Transport Cover and the H-Transport paper transport area
- The H-Transport Cover Interlock Sensor connectors for connection failure
- The Actuator for deformation

Procedure

Enter dC330 [012-303], H-Transport Interlock Sensor (PL 21.26). Select **Start**. Block and unblock the H-Transport Interlock Sensor-L. **The display changes.**

Y N

+5 VDC is measured between the H-Transport Interlock Sensor P/J8445--1 and -3.

Y N

Go to BSD 12.34 Horizontal Transportation (2 of 2). Disconnect J8310 on Finisher PWB. **+5 VDC is measured between H Transport Interlock Sensor P/J8445-1 and -3.**

Y N

Replace the H Transport PWB (PL 21.12).

Check for an open circuit between H-Transport PWB P/J8396-3 and -1 and H-Transport Interlock Sensor P/J8445-1 and -3.

+5 VDC is measured between Finisher PWB J8310-20 and ground.

Y N

Replace the Finisher PWB (PL 21.12)

+5 VDC is measured at the H-Transport Interlock Sensor J8445-2 and ground.

Y N

Check for an open circuit between H-Transport Interlock Switch J8454-1 and H-Transport Interlock Sensor J8445-2.

Replace the H-Transport Interlock Sensor (PL 21.26).

Select Stop. Check the following:

- Alignment between the H-Transport Cover and the H-Transport Interlock Sensor.
- The H-Transport Cover for proper installation
- The Actuator for bending or alignment
- The Magnets for proper mounting

312-307 (Pro) Booklet Drawer Set Fault

BSD-ON:BSD 12.40 Booklet Drive

Booklet Drawer Set Sensor Open was detected.

Initial Actions

- The Booklet Drawer Set Sensor for improper installation
- The Booklet Drawer Set Sensor connectors for connection failure
- The Actuator part for deformation

Procedure

Enter dC330 [013-104], Booklet Drawer Set Sensor (PL 21.15). Select **Start**. Remove and insert the Booklet Drawer manually. **The display changes.**

Y N

Select Stop. Go to BSD 12.40 Booklet Drive. Check continuity between the Booklet Drawer Set Sensor and Finisher PWB. **The continuity check is OK.**

Y N

Repair the open circuit or short circuit.

Replace the Booklet Drawer Set Sensor (PL 21.15). If the problem continues, replace the Finisher PWB (PL 21.12).

Select Stop. If the problem continues, replace the Finisher PWB (PL 21.12).

312-320 (Pro) Puncher Home Sensor On Fault

BSD-ON: BSD 12.50 Professional Finisher Punch Hole Control

The Puncher Home Sensor did not turn On within the specified time after the Puncher Motor started running.

Initial Actions

Check the following:

- Puncher Home Actuator for deformation
- Puncher Home Sensor for proper installation
- Puncher Home Sensor connectors
- Puncher Motor for proper operation
- Puncher Motor connectors

Procedure

Enter dC330 [012-078] and [012-075], Puncher Motor (PL 21.5), alternately. **Select Start. The Puncher Motor runs.**

Y N

Select Stop. Go to BSD 12.49 Professional Finisher Punch Drive. Check circuit of the Punch Motor. Refer to OF 99-9 RAP for troubleshooting procedure.

Select Stop. Select [012-271], Puncher Home Sensor (PL 21.5). Select **Start**. Actuate the sensor with a piece of paper. **The display changes.**

Y N

Go to BSD 12.50 Professional Finisher Punch Hole Control. Check circuit of the Puncher Home Sensor. Refer to OF 99-2 RAP for troubleshooting procedure.

Select Stop. If the problem continues, replace the Finisher PWB (PL 21.12).

312-322 (Pro) Puncher Move Home Sensor Off Fault

BSD-ON: BSD 12.50 Professional Finisher Punch Hole Control

Puncher Move Home Sensor not turned off after the lapse of 1000 (100*) msec from operation start. Puncher Move Home Sensor is not turned off after the Stop following Puncher Move Home Sensor Off.

Initial Actions

- The Actuator for deformation
- The Puncher Move Home Sensor for improper installation
- The Puncher Move Home Sensor connectors for connection failure
- The Puncher Move Motor connectors for connection failure

Procedure

Enter dC330 [012-071] and [012-073], Puncher Move Motor (PL 21.5), alternately. Select **Start**. **The Puncher Move Motor run.**

Y N

Select Stop. Go to BSD 12.49 Professional Finisher Punch Drive. Check continuity between the Puncher Move Motor and Finisher PWB. **The continuity check is OK.**

Y N

Repair the open circuit or short circuit.

Replace the Puncher Move Motor (PL 21.5). If the problem continues, replace the Finisher PWB (PL 21.12).

Select Stop. Select [012-270], Puncher Move Home Sensor (PL 21.5). Select **Start**. Block/unblock the Puncher Move Home Sensor. **The display changes.**

Y N

Select Stop. Go to BSD 12.50 Professional Finisher Punch Hole Control. Check continuity between the Puncher Move Home Sensor and Finisher PWB. **The continuity check is OK.**

Y N

Repair the open circuit or short circuit.

Replace the Puncher Move Home Sensor (PL 21.5). If the problem continues, replace the Finisher PWB (PL 21.12).

Select Stop. Check the following:

- The Puncher Move Motor Belt for improper tension
- The Puncher Move Motor Belt for disengagement

If the above checks are OK, replace the Finisher PWB (PL 21.12).

312-323 (Pro) Puncher Move Home Sensor On Fault

BSD-ON: BSD 12.50 Professional Finisher Punch Hole Control

Puncher Move Home Sensor is not turned on after the lapse of 400(300*500**)msec from operation start. Puncher Move Home Sensor is not turned on after the stop following Puncher Move Home Sensor On.

Initial Actions

Check the following:

- Actuator for deformation
- Puncher Move Home Sensor for improper installation
- Puncher Move Home Sensor connectors for connection failure
- Puncher Move Motor connectors for connection failure

Procedure

Enter dC330 [012-071] and [012-073], Puncher Move Motor (PL 21.5), alternately. Select **Start**. **The Puncher Move Motor energizes.**

Y N

Select Stop. Go to BSD 12.49 Professional Finisher Punch Drive. Check continuity between the Puncher Move Motor and Finisher PWB. **The continuity check is OK.**

Y N

Repair the open circuit or short circuit.

Replace the Puncher Move Motor (PL 21.5). If the problem continues, replace the Finisher PWB (PL 21.12).

Select Stop. Select [012-270], Puncher Move Home Sensor (PL 21.5). Select **Start**. Block/unblock the Puncher Move Home Sensor. **The display changes.**

Y N

Select Stop. Go to BSD 12.50 Professional Finisher Punch Hole Control. Check continuity between the Puncher Move Home Sensor and Finisher PWB. **The continuity check is OK.**

Y N

Repair the open circuit or short circuit.

Replace the Puncher Move Home Sensor (PL 21.5). If the problem continues, replace the Finisher PWB (PL 21.12).

Select Stop. Check the following:

- Puncher Move Motor rack and gear for binding, wear, or damage

If the above check is OK, replace the Finisher PWB (PL 21.12).

312-330 (Pro) Decurler Cam Home Sensor Off Fault

BSD-ON: BSD 12.35 Professional Finisher Decurling

Decurler Move Home Sensor is not turned off after the lapse of 1000msec from the detection of Decurler Cam Home Sensor On.

Initial Actions

- Check for obstructions in the Decurler area

Procedure

Enter dC330 [012-282], Decurler Cam Home Sensor (PL 21.27). Select **Start**. Actuate the Decurler Cam Home Sensor. **The display changes.**

Y N

Select Stop. Go to BSD 12.35 Professional Finisher Decurling. Check the circuit of the Decurler Cam Home Sensor. Refer to the OF 99-2 RAP for troubleshooting procedure.

Select Stop. Select [012-099], Decurler Cam Clutch (PL 21.27). Select **Start**. **The Decurler Roll Shaft rotates.**

Y N

The Decurler Cam Clutch energized.

Y N

Select Stop. Go to BSD 12.35 Professional Finisher Decurling. Check the circuit of the Decurler Cam Clutch. Refer to the OF 99-9 RAP for troubleshooting procedure.

Check the Decurler Cam Clutch and its associated gears, pulleys and belts for damage, contamination and misalignment (PL 21.26, PL 21.27).

Select Stop. Check the following:

- Ensure that the Decurler Cam Home Sensor connectors are securely connected and that the wires are not damaged
- Ensure that the Decurler Cam Clutch connectors are securely connected and that the wires are not damaged
- H-Transport Motor Drive belt for wear, damage, or loose
- H-Transport Motor connections are securely connected and that the wires are not damaged

If the above checks are OK, replace the Decurler Cam Home Sensor (PL 21.27). If the problem continues, replace the H-Transport PWB (PL 21.12). If the problem persists, replace the Finisher PWB (PL 21.12).

312-332 (Pro) Decurler Cam Home Sensor On Fault

BSD-ON: BSD 12.35 Professional Finisher Decurling

Decurler Cam Home Sensor is not turned on after the lapse of 1000msec from the detection of Decurler Cam Home Sensor Off.

Initial Actions

- Check for obstructions in the Decurler area

Procedure

Enter dC330 [012-282], Decurler Cam Home Sensor (PL 21.27). Select **Start**. Actuate the Decurler Cam Home Sensor. **The display changes.**

Y N

Select Stop. Go to BSD 12.35 Professional Finisher Decurling. Check the circuit of the Decurler Cam Home Sensor. Refer to the OF 99-2 RAP for troubleshooting procedure.

Select [012-099], Decurler Cam Clutch (PL 21.27). Select **Start**. **The Decurler Roll Shaft rotates.**

Y N

The Decurler Cam Clutch energized.

Y N

Select Stop. Go to BSD 12.35 Professional Finisher Decurling. Check the circuit of the Decurler Cam Clutch. Refer to the OF 99-9 RAP for troubleshooting procedure.

Check the Decurler Cam Clutch and its associated gears, pulleys and belts for damage, contamination and misalignment (PL 21.26)(PL 21.27).

Select Stop. Check the following:

- Ensure that the Decurler Cam Home Sensor connectors are securely connected and that the wires are not damaged
- Ensure that the Decurler Cam Clutch connectors are securely connected and that the wires are not damaged
- H-Transport Motor Drive belt for wear, damage, or loose
- H-Transport Motor connections are securely connected and that the wires are not damaged

If the above checks are OK, replace the Decurler Cam Home Sensor (PL 21.27). If the problem continues, replace the H-Transport PWB (PL 21.12). If the problem persists, replace the Finisher PWB (PL 21.12).

312-350 (Pro) Finisher Communication

BSD-ON:BSD 12.30 Professional Finisher Detection and Communication

Communication is not established between the MD PWB and the Finisher PWB in A/P Finisher.

Procedure

Switch the machine power Off and On. **The 012-350 is still present.**

Y N

Return to Service Call Procedures.

Check J8300 on the Finisher PWB and J590 on the MD PWB for a secure connection (BSD 12.30 Professional Finisher Detection and Communication). Check the condition of the wires. Check the connections between the A/P Finisher and the IOT. If the connectors were recently disconnected and reconnected check for damaged pins.

Check for less than 1 VDC at J590-1 on the MD PWB. **Less than 1 VDC is measured.**

Y N

Check the wire between J590-1 on the MD PWB and J8300-11 on the Finisher PWB for damage or a break. Repair as required. If the wire is good, replace the MD PWB (PL 18.2B-7545/7556 or PL 18.2A-7525/30/35).

Replace the Finisher PWB (PL 21.12).

312-900 (Pro) Paper at Buffer Path Sensor

BSD-ON: BSD 12.39 Professional Finisher Buffer Transport

Control logic reports paper at the Buffer Path Sensor.

Initial Actions

Check the following:

- Paper on the Buffer Path Sensor
- Obstructions in the paper path

Procedure

Enter dC330 [012-101], Buffer Path Sensor (PL 21.10). Select **Start**. Actuate the Buffer Path Sensor. **The display changes.**

Y N

Select Stop. Go to BSD 12.39 Professional Finisher Buffer Transport. Check the circuit of the Buffer Path Sensor. Refer to the OF 99-2 RAP for troubleshooting procedure.

Select Stop. Check the following:

- Ensure that the connectors shown in the circuit diagrams are securely connected and that the wires are not damaged
- Finisher for a docking failure

If the above checks are OK, then replace the Buffer Path Sensor (PL 21.10). If the problem persists, replace the Finisher PWB (PL 21.12).

312-901 (Pro) Paper at H-Transport Entrance Sensor

BSD-ON: BSD 12.33 Horizontal Transportation (1 of 2)

Control logic reports paper at the H-Transport Entrance Sensor.

Initial Actions

Check the following:

- Paper on the H-Transport Entrance Sensor
- Obstructions in the paper path
- H-Transport Motor Belt for wear or damage
- Guides on the H-Transport Cover for damage, wear or faulty installation

Procedure

Enter dC330 [012-190], H-Transport Entrance Sensor (PL 21.26). Select **Start**. Open the H-Transport Cover and actuate the H-Transport Entrance Sensor. **The display changes.**

Y N

Select Stop. Go to BSD 12.33 Horizontal Transportation (1 of 2). Check the circuit of the H-Transport Entrance Sensor. Refer to the OF 99-2 RAP for troubleshooting procedure.

Select Stop. Check the following:

- Ensure that the connectors shown in the circuit diagrams are securely connected and that the wires are not damaged
- H-Transport and Finisher for a docking failure
- H-Transport Motor and its associated gears and belts for damage, contamination or mis-alignment

If the above checks are OK, then replace the H-Transport Entrance Sensor (PL 21.26). If the problem persists, replace the Finisher PWB (PL 21.12).

312-902 (Pro) Paper at H-Transport Exit Sensor

BSD-ON:BSD 12.33 Horizontal Transportation (1 of 2)

Control logic reports paper at the H-Transport Exit Sensor.

Initial Actions

Check the following:

- Paper on the H-Transport Exit Sensor
- Obstructions in the paper path
- H-Transport Motor Belt for wear or damage
- Guides on the H-Transport Cover for damage, wear or faulty installation

Procedure

Enter dC330 [012-191], H-Transport Exit Sensor (PL 21.28). Select **Start**. Open the H-Transport Cover and actuate the H-Transport Exit Sensor. **The display changes.**

Y **N**

Select Stop. Go to BSD 12.34 Horizontal Transportation (2 of 2) Check the circuit of the H-Transport Exit Sensor. Refer to the OF 99-2 RAP for troubleshooting procedure.

Select Stop. Check the following:

- Ensure that the connectors shown in the circuit diagrams are securely connected and that the wires are not damaged
- H-Transport and Finisher for a docking failure
- H-Transport Motor and its associated gears and belts for damage, contamination or misalignment

If the above checks are OK, then replace the H-Transport Exit Sensor (PL 21.28). If the problem persists, replace the Finisher PWB (PL 21.12).

312-903 (Pro) Paper at Compiler Exit Sensor

BSD-ON:BSD 12.51 Professional Finisher Compiling

Control logic reports paper at the Compiler Exit Sensor.

Initial Actions

- Paper on the Compiler Exit Sensor
- Obstructions in the paper path

Procedure

Enter dC330 [012-150], Compiler Exit Sensor (PL 21.9). Select **Start**. Open the H-Transport Cover and actuate the Compiler Exit Sensor. **The display changes.**

Y **N**

Select Stop. Go to BSD 12.51 Professional Finisher Compiling. Check the circuit of the Compiler Exit Sensor. Refer to the OF 99-2 RAP for troubleshooting procedure.

Select Stop. Check the following:

- Ensure that the connectors shown in the circuit diagrams are securely connected and that the wires are not damaged
- Exit Motor Belt for wear or damage
- Exit Pinch Rollers 1 and 2 for damage
- Lower Exit Roller for wear or damage
- Synchronous Belt for wear or damage

If the above checks are OK, then replace the Compiler Exit Sensor (PL 21.9). If the problem continues, replace the Finisher PWB (PL 21.12).

312-905 (Pro) Paper at Compiler Tray No Paper Sensor

BSD-ON:BSD 12.51 Professional Finisher Compiling

Control logic reports paper at the Compiler Tray No Paper Sensor.

Initial Actions

- Paper on the Compiler Tray Paper Sensor
- Obstructions in the paper path

Procedure

Enter dC330 [012-151], Compiler Tray No Paper Sensor (PL 21.8). Select **Start**. Actuate the Compiler Tray No Paper Sensor. **The display changes.**

Y **N**

Select Stop. Go to BSD 12.51 Professional Finisher Compiling Check the circuit of the Compiler Tray No Paper Sensor. Refer to the OF 99-2 RAP for troubleshooting procedure.

Select Stop. Check the following:

- Ensure that the connectors shown in the circuit diagrams are securely connected and that the wires are not damaged
- Exit Motor Belt for wear or damage
- Exit Pinch Rollers 1 and 2 for damage
- Lower Exit Roller for wear or damage
- Synchronous Belt for wear or damage

If the above checks are OK, then replace the Compiler Tray No Paper Sensor (PL 21.8). If the problem continues, replace the Finisher PWB (PL 21.12).

312-907 (Pro) Paper at Top Tray Exit Sensor

BSD-ON:BSD 12.48 Professional Finisher Top Tray Stacking

Control logic reports paper at the Top Tray Exit Sensor.

Initial Actions

- Paper on the Top Tray Exit Sensor
- Obstructions in the paper path

Procedure

Enter dC330 [012-115], Top Tray Exit Sensor (PL 21.11). Select **Start**. Actuate the Top Tray Exit Sensor. **The display changes.**

Y **N**

Select Stop. Go to BSD 12.48 Professional Finisher Top Tray Stacking. Check the circuit of the Top Tray Exit Sensor. Refer to the OF 99-2 RAP for troubleshooting procedure.

Select Stop. Check the following:

- Ensure that the connectors shown in the circuit diagrams are securely connected and that the wires are not damaged
- Exit Motor Belt for wear or damage
- Exit Drive Shaft Rolls for wear or damage
- Exit Pinch Rollers for wear or damage
- Synchronous Belt for wear or damage

If the above checks are OK, then replace the Top Tray Exit Sensor (PL 21.11). If the problem continues, replace the Finisher PWB (PL 21.12).

312-910 (Pro) Staple Ready Sensor Fault

BSD-ON: BSD 12.53 Professional Finisher Stapler Control

Staple Ready Sensor is turned off at stapling start.

Procedure

Enter dC330 [012-243], Stapler Ready Sensor, (part of Stapler Assembly) (PL 21.6). Select **Start**. Block/unblock the Stapler Ready Sensor. **The display changed.**

Y N

Select Stop. Go to BSD 12.53 Professional Finisher Stapler Control. Check continuity between the Stapler Ready Sensor and Finisher PWB. **The continuity check is OK.**

Y N

Repair the open circuit or short circuit.

Replace the Stapler (PL 21.6). If the problem continues, replace the Finisher PWB (PL 21.12).

Select Stop. Check the following:

- Wiring between the Stapler and the Finisher PWB
- Obstructions on the Stapler Upper Rail
- Stapler Move Motor Gear

If the above checks are OK. replace the Finisher PWB (PL 21.12).

312-916 (Pro) Stapler NG

BSD-ON: BSD 12.53 Professional Finisher Stapler Control

The Staple Home Sensor has not switched from Off to On within the specified time after the Staple Motor started rotating forward.

The Staple Head Home Sensor turned On within xxx msec. after the Staple Motor reversed.

Initial Actions

- The Actuator for deformation
- The Staple Home Sensor for improper installation
- The Staple Home Sensor connectors for connection failure
- The Staple Guide for a foreign substance and deformation
- The Staple Motor for operation failure
- The Staple Motor connectors for connection failure

Procedure

Enter dC330 [012-042] and [012-043], Staple Motor (PL 21.6), alternately. Select **Start**. **The Staple Motor energizes.**

Y N

Select Stop. Go to BSD 12.53 Professional Finisher Stapler Control. Check continuity between the Stapler Head and Finisher PWB. **The continuity check is OK.**

Y N

Repair the open circuit or short circuit.

Replace the Stapler (PL 21.6). If the problem continues, replace the Finisher PWB (PL 21.12).

Select Stop. Select [012-244], Staple Home Sensor, (part of Stapler Assembly) (PL 21.6). Select [012-042] and [012-043], Staple Motor (PL 21.6), alternately. Select **Start**. **The display changes.**

Y N

Select Stop. Go to BSD 12.53 Professional Finisher Stapler Control. Check continuity between the Stapler and Finisher PWB. **The continuity check is OK.**

Y N

Repair the open circuit or short circuit.

Replace the Stapler Head (PL 21.6). If the problem continues, replace the Finisher PWB (PL 21.12).

Select Stop. If the problem continues, replace the Finisher PWB (PL 21.12).

312-920 (Pro) Paper at Gate Sensor (Top Tray Job)

BSD-ON:BSD 12.38 Professional Finisher Transport Top Tray Gating

Control logic reports paper at the Gate Sensor.

Initial Actions

- Check for obstructions in the paper path
- Check the Finisher Drive Motor Gears and Drive rolls for wear or damage

Procedure

Enter dC330 [012-102], Gate Sensor (PL 21.11). Select **Start**. Actuate the Gate Sensor. **The display changes.**

Y N

Select Stop. Go to BSD 12.38 Professional Finisher Transport Top Tray Gating. Check the circuit of the Gate Sensor. Refer to the OF 99-2 RAP for troubleshooting procedure.

Select Stop. Check the following:

- Ensure that the connectors shown in the circuit diagrams are securely connected and that the wires are not damaged
- Check the Finisher is docked properly
- Check the Finisher Transport Motor and its associated gears and belts for damage, contamination or misalignment

If the above checks are OK, then replace the Gate Sensor (PL 21.11). If the problem persists, replace the Finisher PWB (PL 21.12).

312-921 (Pro) Paper at Gate Sensor (Compiler Path Job)

BSD-ON: BSD 12.38 Professional Finisher Transport Top Tray Gating

Control logic reports paper at the Gate Sensor.

Initial Actions

- Check for obstructions in the paper path
- Check the Finisher Drive Motor Gears and Drive rolls for wear or damage

Procedure

Enter dC330 [012-102], Gate Sensor (PL 21.11). Select **Start**. Actuate the Gate Sensor. **The display changes.**

Y N

Select Stop. Go to BSD 12.38 Professional Finisher Transport Top Tray Gating Check the circuit of the Gate Sensor. Refer to the OF 99-2 RAP for troubleshooting procedure.

Select Stop. Check the following:

- Ensure that the connectors shown in the circuit diagrams are securely connected and that the wires are not damaged
- Check the Finisher is docked properly
- Check the Finisher Transport Motor and its associated gears and belts for damage, contamination or misalignment

If the above checks are OK, then replace the Gate Sensor (PL 21.11). If the problem persists, replace the Finisher PWB (PL 21.12).

312-922 (Pro) Paper at Gate Sensor (Buffer Path Job)

BSD-ON:BSD 12.38 Professional Finisher Transport Top Tray Gating

Control logic reports paper at the Gate Sensor.

Initial Actions

- Check for obstructions in the paper path
- Check the Finisher Drive Motor Gears and Drive rolls for wear or damage

Procedure

Enter dC330 [012-102], Gate Sensor (PL 21.11). Select **Start**. Actuate the Gate Sensor. **The display changes.**

Y **N**

Select Stop. Go to BSD 12.38 Professional Finisher Transport Top Tray Gating. Check the circuit of the Gate Sensor. Refer to the OF 99-2 RAP for troubleshooting procedure.

Select Stop. Check the following:

- Ensure that the connectors shown in the circuit diagrams are securely connected and that the wires are not damaged
- Check the Finisher is docked properly
- Check the Finisher Transport Motor and its associated gears and belts for damage, contamination or misalignment

If the above checks are OK, then replace the Gate Sensor (PL 21.11). If the problem persists, replace the Finisher PWB (PL 21.12).

312-925 (Pro) Stacker Lower Safety Warning

BSD-ON:12.58 Professional Finisher Stack Height Detection

Stack Height Sensor 1 Off is not detected 500ms after the stacker starts going down and this occurs three times.

Procedure

Check for obstacles in the under the Stacker Tray. **The problem is resolved.**

Y **N**

Enter dC330 [012-264] Stacker Height Sensor 1. Select **Start**. Move the Stacker Tray manually. **The display changes.**

Y **N**

GO to BSD 12.58 Professional Finisher Stack Height Detection. Check the circuit of Stack Height Sensor 1 (PL 21.4). If the sensor and wiring are OK, replace the Finisher PWB (PL 21.12).

Select **Stop**. Replace the Finisher PWB (PL 21.12).

If the problem continues, replace the Finisher PWB (PL 21.12).

312-930 (Pro) Full Stack Detected

BSD-ON:BSD 12.57 Professional Finisher Stacker Drive

BSD-ON:BSD 12.58 Professional Finisher Stack Height Detection

Stacker No Paper Sensor On was detected during the Stacker Tray height adjusting operation.

Initial Actions

- The Stacker No Paper Sensor for improper installation
- The Stacker No Paper Sensor connectors for connection failure
- The Elevator Motor for operation failure
- The Elevator Motor connectors for connection failure

Procedure

Enter dC330 [012-061] Elevator Motor Down and [012-060] Elevator Motor UP (PL 21.4), alternately. Select **Start**. **The Elevator Motor energizes.**

Y N

Select Stop. Go to BSD 12.57 Professional Finisher Stacker Drive. Check continuity between the Elevator Motor and Finisher PWB. **The continuity check is OK,**

Y N

Repair the open circuit or short circuit.

Replace the Elevator Motor (PL 21.4). If the problem continues, replace the Finisher PWB

Select Stop. Select [012-262], Stacker No Paper Sensor (PL 21.4). Select **Start**. Block/unblock the Stacker No Paper Sensor. **The display changes.**

Y N

Select Stop. Go to BSD 12.57 Professional Finisher Stacker Drive Check continuity between the Stacker No Paper Sensor and Finisher PWB. **The continuity check is OK,**

Y N

Repair the open circuit or short circuit.

Replace the Stacker No Paper Sensor (PL 21.4). If the problem continues, replace the Finisher PWB

Select [012-263], Stacker Encoder Sensor (PL 21.4). Select **Start**. Block/unblock the Stacker Encoder Sensor. **The display changes.**

Y N

Select Stop. Go to BSD 12.57 Professional Finisher Stacker Drive Check continuity between the Stacker Encoder Sensor and Finisher PWB. **The continuity check is OK,**

Y N

Repair the open circuit or short circuit.

Replace the Stacker Encoder Sensor (PL 21.4). If the problem continues, replace the Finisher PWB

Select Stop. If the problem continues, replace the Finisher PWB (PL 21.12).

312-935 (Pro) Paper at Transport Entrance Sensor

BSD-ON:BSD 12.38 Professional Finisher Transport Top Tray Gating

Control logic reports paper at the Transport Entrance Sensor.

Initial Actions

- Check for obstructions in the paper path
- Check that the Finisher is docked correctly to ensure proper Transport Gate operation

Procedure

Enter dC330 [012-100], Transport Entrance Sensor (PL 21.10). Select **Start**. Actuate the Transport Entrance Sensor. **The display changes.**

Y N

Select Stop. Go to BSD 12.38 Professional Finisher Transport Top Tray Gating. Check the circuit of the Transport Entrance Sensor. Refer to the OF 99-2 RAP for troubleshooting procedure.

Select Stop. Check the following:

- Ensure that the connectors shown in the circuit diagrams are securely connected and that the wires are not damaged
- Check the H-Transport Motor and its associated gears and belts for damage, contamination or alignment
- Check the Finisher Transport Motor and its associated gears and belts for damage, contamination or alignment

If the above checks are OK, then replace the Transport Entrance Sensor (PL 21.10). If the problem persists, replace the Finisher PWB (PL 21.12).

312-944 (Pro) Stacker Set Over Full

The Staple Set Count exceeded the maximum number of sheets on the Stacker Tray during the Staple Set Eject operation.

Procedure

Remove all paper from the Stacker. Perform the job again. **The problem is resolved**

Y **N**

Replace the Finisher PWB (PL 21.12).

Check the following:

- Eject Motor Gears for wear or damage.
- Paddle Shaft and Paddles for wear or damage.

312-945 (Pro) Low Staples

BSD-ON: BSD 12.53 Professional Finisher Stapler Control

The Low Staple Sensor turned On just before the Staple Motor started running.

Initial Actions

- Stapler Head connectors for connection failure
- Staple remaining amount

Procedure

Enter dC330 [012-242], Low Staple Sensor (PL 21.6). Select **Start**. **'LOW' (staples available) is displayed.**

Y **N**

Select Stop. Go to BSD 12.50 Professional Finisher Stapler Control. Check continuity between the Stapler Head and Finisher PWB. **The continuity check is OK.**

Y **N**

Repair the open circuit or short circuit.

Replace the Stapler Head (PL 21.6). If the problem continues, replace the Finisher PWB (PL 21.12).

If the problem continues, replace the Finisher PWB (PL 21.12).

312-946 (Pro) Top Tray Full

BSD-ON: BSD 12.48 Professional Finisher Top Tray Stacking

The Top Tray Full Sensor was turned On for 10sec continuously.

Initial Actions

- The Top Tray Full Sensor for improper installation
- The Top Tray Full Sensor connectors for connection failure
- The Top Tray Full Sensor Actuator for deformation and operation failure

Procedure

Enter dC330 [012-215], Top Tray Full Sensor, (PL 21.11). Select **Start**. Actuate the Top Tray Full Sensor. **The display changes.**

Y N

Select Stop. Go to BSD 12.48 Professional Finisher Top Tray Stacking Check continuity between the Top Tray Full Sensor and Finisher PWB. **The continuity check is OK.**

Y N

Repair the open circuit or short circuit.

Replace the Top Tray Full Sensor (PL 21.11). If the problem continues, replace the Finisher PWB (PL 21.12).

Select Stop. If the problem continues, replace the Finisher PWB (PL 21.12).

312-949 (Pro) Puncher Waste Bin Open

BSD-ON:BSD 12.37 Professional Finisher Booklet/Punch Transport

The Puncher Waste Bin Set Sensor detected Off (No Puncher Waste Bin).

Initial Actions

- The Puncher Waste Bin Set Sensor for improper installation
- The Puncher Waste Bin Set Sensor connectors for connection failure
- The Puncher Waste Bin Actuator part for deformation and damage
- The Guide for deformation
- The Guide for a foreign substance

Procedure

Enter dC330 [012-275], Puncher Box Set Sensor (PL 21.5). Select **Start**. Remove and insert the Puncher Waste Bin manually. **The display changes**

Y N

Select Stop. Go to BSD 12.37 Professional Finisher Booklet/Punch Transport Check continuity between the Puncher Box Set Sensor and Finisher PWB. **The continuity check is OK.**

Y N

Repair the open circuit or short circuit.

Replace the Puncher Box Set Sensor (PL 21.5). If the problem continues, replace the Finisher PWB (PL 21.12).

Check the Puncher Waste Box Actuator and Guide for deformation. **The Puncher Waste Bin can be removed and inserted properly.**

Y N

Repair or replace the Puncher Waste Bin (PL 21.5).

Select Stop. If the problem continues, replace the Finisher PWB (PL 21.12).

312-961 (Pro) Mix Stack detected

BSD-ON:BSD 12.57 Professional Finisher Stacker Drive

Mix Stack Sensor On was detected during Mix Job.

Initial Actions

- The Elevator Motor for operation failure
- The Elevator Motor connectors for connection failure

Procedure

Enter dC330 [012-061] Elevator Motor Down and [012-060] Elevator Motor UP (PL 21.4), alternately. Select **Start**. **The Elevator Motor energizes.**

Y N

Select Stop. Go to BSD 12.57 Professional Finisher Stacker Drive. **Check continuity between the Elevator Motor and Finisher PWB. The continuity check is OK.**

Y N

Repair the open circuit or short circuit.

Replace the Elevator Motor (PL 21.4). If the problem continues, replace the Finisher PWB (PL 21.12).

Select Stop. If the problem continues, replace the Finisher PWB (PL 21.12).

312-963 (Pro) Puncher Waste Bin Full

BSD-ON:BSD 12.37 Professional Finisher Booklet/Punch Transport

Cumulative punching count reached the specified times (2-hole punching: 5000 times, 4-hole punching: 2500 times).

Procedure

Remove the Puncher Waste Bin and discard the waste. Reinstall the Puncher Waste Bin. **The problem is resolved.**

Y N

Enter dC330 [012-275], Puncher Box Set Sensor (PL 21.5). Select **Start**. Remove and reinsert the Puncher Waste Bin. **The display changes.**

Y N

Select **Stop**. Go to BSD 12.37 Professional Finisher Booklet/Punch Transport Check continuity between the Puncher Box Set Sensor and Finisher PWB. **The continuity check is OK.**

Y N

Repair the open circuit or short circuit.

Replace the Puncher Box Set Sensor (PL 21.5). If the problem continues, replace the Finisher PWB (PL 21.12).

Select **Stop**. Replace the Finisher PWB (PL 21.12).

Ensure the Puncher Waste Bin is installed properly.

312-978 (Pro) Booklet Stapler NG

BSD-ON:BSD 12.45 Booklet Staple Control

Error signal On and Ready signal On output from the Staple were detected after Booklet Stapling operation.

Procedure

Go to Figure 1. Check continuity between the Booklet PWB and Finisher PWB. **The continuity check is OK.**

Y **N**

Repair the open circuit or short circuit.

Replace the Stapler (PL 21.16). The is problem resolved.

Y **N**

Replace the Booklet PWB (PL 21.13). If the problem continues, replace the Finisher PWB (PL 21.12).

If the problem continues, replace the Finisher PWB (PL 21.12).

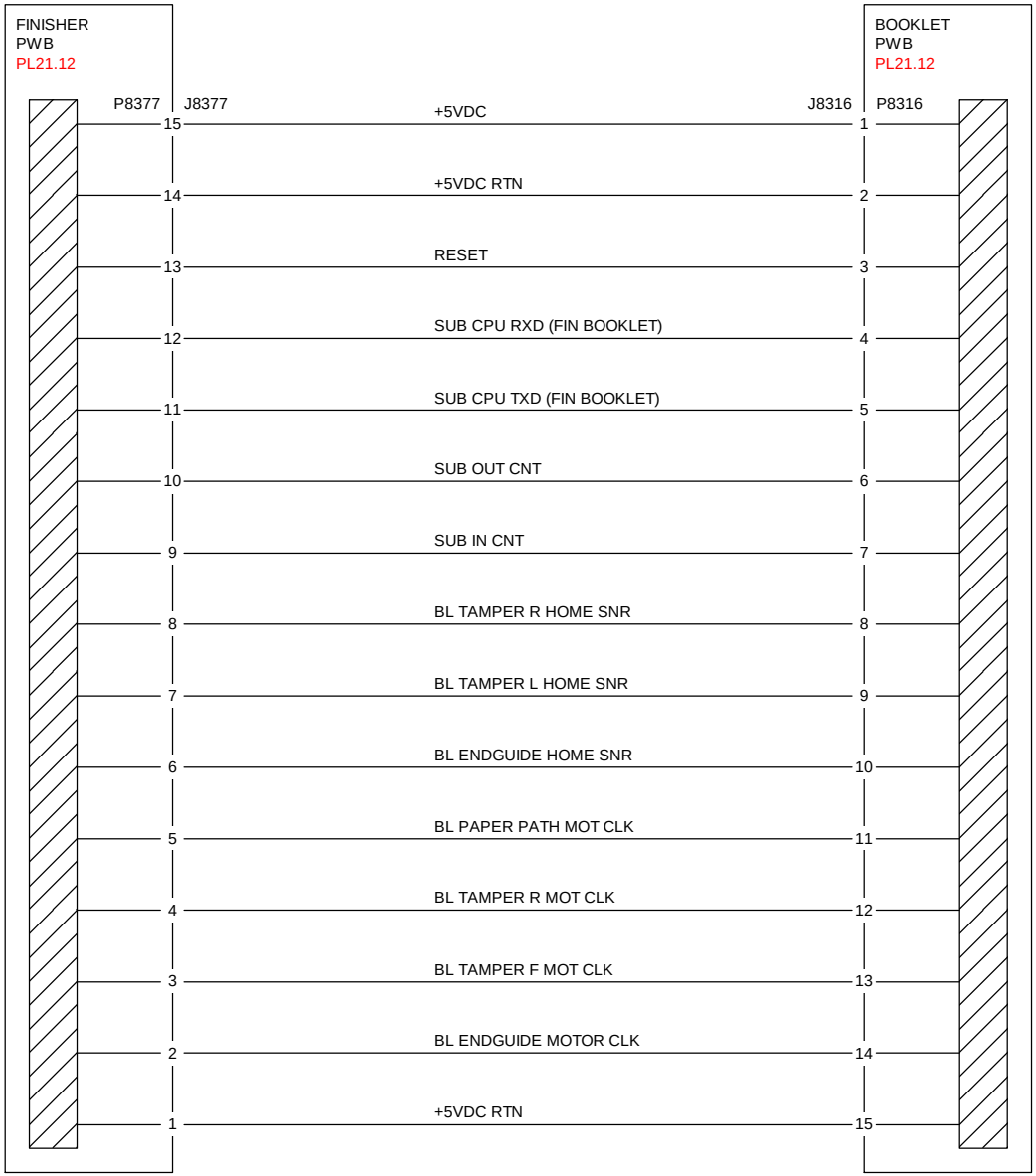

T712143A-COP.VSD.

Figure 1 Finisher, Booklet PWBs

312-983 (Pro) Booklet Tray Full was detected

BSD-ON:BSD 12.47 Booklet Tray Control

Booklet Tray Full was detected.

Procedure

Remove all sets. Perform the job again. **The problem is resolved.**

Y **N**

Replace the Finisher PWB (PL 21.12).

If the problem continues, replace the Finisher PWB (PL 21.12).

312-984 (Pro) Booklet Low Staple F

BSD-ON:BSD 12.45 Booklet Staple Control

Booklet Stapler Low Staple Front signal was detected just before Stapling operation.

Booklet Stapler Low Staple Front signal was detected at Power On, at initialization, or when the interlock was closed.

Procedure

Supply the staples. **The problem is resolved.**

Y **N**

Enter dC330 [013-107], Booklet Low Staple Front. Select **Start. 'LOW' (staples available) is displayed**

Y **N**

Select Stop. Go to BSD 12.45 Booklet Staple Control Check continuity between the Staple and Booklet PWB, and between the Booklet PWB and Finisher PWB. **The continuity check is OK.**

Y **N**

Repair the open circuit or short circuit.

Replace the Booklet Stapler Low Staple Front (PL 21.16). If the problem continues, replace the Finisher PWB (PL 21.12).

Select Stop. Replace the Finisher PWB (PL 21.12). If the problem continues, replace the Booklet PWB (PL 21.13).

If the problem continues, replace the Finisher PWB (PL 21.12). If the problem persists, replace the Booklet PWB (PL 21.13).

312-989 (Pro) Booklet Low Staple R

BSD-ON:BSD 12.45 Booklet Staple Control

Booklet Stapler Low Staple Rear signal was detected just before Stapling operation.

Booklet Stapler Low Staple Rear signal was detected at Power On, at initialization, or when the interlock was closed.

Procedure

Supply the staples. **The problem is resolved.**

Y N

Enter dC330 [013-108], Booklet Low Staple Rear. Select **Start**. **'LOW' (staples available) is displayed**

Y N

Select **Stop.** Go to BSD 12.45 Booklet Staple Control Check continuity between the Staple and Booklet PWB, and between the Booklet PWB and Finisher PWB. **The continuity check is OK.**

Y N

Repair the open circuit or short circuit.

Replace the Booklet Stapler Low Staple Rear (PL 21.16). If the problem continues, replace the Finisher PWB (PL 21.12).

Select Stop. Replace the Finisher PWB (PL 21.12). If the problem continues, replace the Booklet PWB (PL 21.13).

If the problem continues, replace the Finisher PWB (PL 21.12). If the problem persists, replace the Booklet PWB (PL 21.13).

312-132 (Int) Entrance Sensor ON Jam

BSD-ON: BSD 12.3 Integrated Finisher Transportation

Finisher Entrance Sensor does not turn On within a specified time after receiving the Sheet Exit command (the sheet to be ejected has turned ON the IOT Exit Sensor 1).

Initial Actions

- Check that the Finisher Entrance Sensor is properly installed and free from foreign objects and that the actuator is not broken.
- Power Off/On.

Procedure

Check the specifications of paper. **Paper is in spec.**

Y N

Replace the paper with new paper that is in spec.

Check the condition of the paper. **The paper is in normal condition without any problem that causes the paper to be bent or caught.**

Y N

Resolve any problem that causes the paper to be bent or caught.

Check the transport path for a foreign object, deformed part, and paper dust. **The transport path is in normal condition.**

Y N

Repair the deformed part(s) and remove the foreign object(s) and paper dust.

Check that the Finisher is installed properly. **The Finisher is properly installed and properly connected to the IOT.**

Y N

Reinstall the Finisher properly.

Enter dC330 [012-140]. Actuate the Finisher Entrance Sensor. **The display changes.**

Y N

Check the connections of P/J8709 and P/J8729. **P/J8709 and P/J8729 are securely connected.**

Y N

Connect P/J8709 and P/J8729 securely.

Check for an open or short circuit between J8709 and J8729. **The wires between J8709 and J8729 are OK.**

Y N

Repair the open or short circuit.

Measure the voltage between Finisher PWB J8709-6 (+) and GND (-). **The voltage is approx. +5VDC.**

Y N

Go to Finisher (Int) +24VDC/24VDC RTN and check the +5VDC circuit.

Measure the voltage between Finisher PWB J8709-5 (+) and GND (-). Actuate the Finisher Entrance Sensor. **The voltage changes.**

A

Y N

Replace the Finisher Entrance Sensor (PL 22.5).

Check the wires and connectors for an intermittent open or short circuit. If the problem continues, replace the Finisher PWB (PL 22.7).

Check the wires and connectors for an intermittent open or short circuit. If the problem continues, replace the Finisher PWB (PL 22.7).

312-151 (Int) Compiler Exit Sensor OFF Jam

BSD-ON:BSD 12.3 Integrated Finisher Transportation

The Compiler Exit Sensor does not turn Off within a specified time after it has turned On.

Initial Actions

- Check the Compiler Exit Sensor is properly installed and free from foreign objects and that the actuator is not binding.
- Power Off/On.

Procedure

Check the specifications of paper. **Paper is in spec.**

Y N

Replace the paper with new paper that is in spec.

Check the condition of the paper. **The paper is in normal condition without any problem that causes the paper to be bent or caught.**

Y N

Resolve any problem that causes the paper to be bent or caught.

Check the transport path for a foreign object, deformed part, and paper dust. **The transport path is in normal condition with no foreign object, deformed part and paper dust.**

Y N

Repair the deformed part(s) and remove the foreign object(s) and paper dust.

Check the Transport Roll for wear, deterioration and paper dust. **The Transport Roll is in normal condition, not worn and deteriorated and with no paper dust.**

Y N

Remove the paper dust and replace the worn or deteriorated Transport Roll.

Check the drive mechanism to the Transport Roll for a deformed, broken part, and/or belt damage. **The drive mechanism is free of defects.**

Y N

Repair defects or damage to the drive mechanism.

Enter dC330 [012-150]. Actuate the Compiler Exit Sensor. **The display changes.**

Y N

Check the connections of P/J8709 and P/J8728. **P/J8709 and P/J8728 are securely connected.**

Y N

Connect P/J8709 and P/J8728 securely.

Check for an open or short circuit between J8709 and J8728. **The wire J8709 and J8728 are OK.**

Y N

Repair the open or short circuit.

Measure the voltage between Finisher PWB J8709-3 (+) and GND (-). **The voltage is approx. +5VDC.**

A

Y N

Go to Finisher (Int) +24VDC/24VDC RTN and check the +5VDC circuit.

Measure the voltage between Finisher PWB J8709-2 (+) and GND (-). Actuate the Compiler Exit Sensor. **The voltage changes.**

Y N

Replace the Compiler Exit Sensor (PL 22.5).

Check the wires and connectors for an intermittent open or short circuit. If the problem continues, replace the Finisher PWB (PL 22.7).

Enter dC330 [012-095]. **The Finisher Transport Motor rotates.**

Y N

Check the connections of P/J8706 and P/J8739. **P/J8706 and P/J8739 P/J8739 are securely connected.**

Y N

Connect P/J8706 and P/J8739 securely.

Check for an open or short circuit between J8706 and J8736. **The wire between J8706 and J8736 are OK.**

Y N

Repair the open or short circuit.

Measure the voltage between Finisher PWB J8706-5 (+) and GND (-), and between Finisher PWB J8706-7 (+) and GND (-). **Each voltage is approx. +24VDC.**

Y N

Go to Finisher (Int) +24VDC/24VDC RTN and check the +24VDC circuit.

Check the wires and connectors for an intermittent open or short circuit. If the problem continues, replace the Finisher Transport Motor (PL 22.4). If the problem persists, replace the Finisher PWB (PL 22.7).

Enter dC330 [012-013]. **When the Sub Paddle Solenoid is turned On/Off, the Sub Paddle Shaft Assembly goes down/up.**

Y N

Check the Sub Paddle mechanism for a deformed or broken part and not-seated gears. **The Sub Paddle mechanism is free from defects and gears are seating properly.**

Y N

Repair defeats to the Sub Paddle mechanism.

Check the connections of P/J8705 and P/J8734. **P/J8705 and P/J8734 are securely connected.**

Y N

Connect P/J8705 and P/J8734 securely.

Check for an open or short circuit between J8705 and J8734. **The wires between J8705 and J8734 are OK.**

Y N

Repair the open or short circuit.

Measure the voltage between Finisher PWB J8705-1 (+) and GND (-). **The voltage is approx. +24VDC.**

B

B

Y **N**

Go to Finisher (Int) +24VDC/24VDC RTN and check the +24VDC circuit. If the circuit is OK, replace the Finisher PWB (PL 22.7).

Enter dC330 [012-013], measure the voltage between Finisher PWB J8705-2 (+) and GND (-). **The voltage changes.**

Y **N**

Replace the Finisher PWB (PL 22.7).

Replace the Sub Paddle Solenoid (PL 22.3).

Check the wires and connectors for an intermittent open or short circuit. If the problem continues, replace the Finisher PWB (PL 22.7).

312-152 (Int) Compiler Exit Sensor ON Jam

BSD-ON:BSD 12.3 Integrated Finisher Transportation

The Compiler Exit Sensor does not turn On within a specified time after receiving the Sheet Exit command (the paper to be ejected has turned On the IOT Exit Sensor 1).

Initial Actions

- Check the Compiler Exit Sensor is properly installed and free from foreign objects and that the actuator is not broken.
- Power Off/On.

Procedure

Check the specifications of paper. **Paper is in spec.**

Y **N**

Replace the paper with new paper that is ins spec.

Check the condition of the paper. **The paper is in normal condition without any problem that causes the paper to be bent or caught.**

Y **N**

Resolve any problem that causes the paper to be bent or caught.

Check the transport path for a foreign object, deformed part, and paper dust. **The transport path is in normal condition with no foreign object, deformed part and paper dust.**

Y **N**

Repair the deformed part(s) and remove the foreign object(s) and paper dust.

Check the Transport Roll for wear, deterioration and paper dust. **The Transport Roll is in normal condition.**

Y **N**

Remove the paper dust and replace the worn or deteriorated Transport Roll.

Check the drive mechanism to the Transport Roll for a deformed parts, broken parts, and/or belt damage. **The drive mechanism free from defects.**

Y **N**

Repair defects or damage to the drive mechanism.

Check that the Finisher is installed properly. **The Finisher is properly installed and properly connected to the IOT.**

Y **N**

Reinstall the Finisher properly.

Enter dC330 [012-150]. Actuate the Compiler Exit Sensor. **The display changes.**

Y **N**

Check the connections of P/J8709 and P/J8728. **P/J8709 and P/J8728 are securely connected.**

Y **N**

Connect P/J8709 and P/J8728 securely.

Check for an open or short circuit between J8709 and J8728. **The wires between J 8709 and J8728 are OK.**

A

A

Y N

Repair the open or short circuit.

Measure the voltage between Finisher PWB J8709-3 (+) and GND (-). **The voltage is approx. +5VDC.**

Y N

Go to Finisher (Int) +24VDC/24VDC RTN and check the +5VDC circuit.

Measure the voltage between Finisher PWB J8709-2 (+) and GND (-). Actuate the Compiler Exit Sensor. **The voltage normally changes.**

Y N

Replace the Compiler Exit Sensor (PL 22.5).

Check the wires and connectors for an intermittent open or short circuit. If the problem continues, replace the Finisher PWB (PL 22.7).

Enter dC330 [012-095]. **The Finisher Transport Motor rotates.**

Y N

Check the connections of P/J8706 and P/J8739. **P/J8706 and P/J8739 are securely connected.**

Y N

Connect P/J8706 and P/J8739 securely.

Check for an open or short circuit between J8706 and J8739. **The wire between J8706 and J8739 are OK.**

Y N

Repair the open or short circuit.

Measure the voltage between Finisher PWB J8706-5 (+) and GND (-), and J8706-7 (+) and GND (-). **Each voltage is approx. +24VDC.**

Y N

Go to Finisher (Int) +24VDC/24VDC RTN and check the +24VDC circuit.

Check the wires and connectors for an intermittent open or short circuit. If the problem continues, replace the Finisher Transport Motor (PL 22.4). If the problem persists, replace the Finisher PWB (PL 22.7).

Check the wires and connectors for an intermittent open or short circuit. If the problem continues, replace the Finisher PWB (PL 22.7).

312-161 (Int) Set Eject Jam

BSD-ON:BSD 12.6 Integrated Finisher Set Eject (1 of 2)

In the Eject Motor's ejecting operation, Eject Home Sensor ON was detected within a specified time after the start of the reverse operation of the Eject Motor.

(The Eject Motor should have ejected paper, but returned Home earlier than specified.)

Initial Actions

- Check the Eject Home Sensor is properly installed, not broken, and has no foreign object.
- Power Off/On.

Procedure

Check the specifications of paper. **Paper is in spec.**

Y N

Replace the paper with new paper that is in spec.

Check the condition of the paper. **The paper is in normal condition without any problem that causes the paper to be bent or caught.**

Y N

Resolve any problem that causes the paper to be bent or caught.

Check the Eject mechanism for deformed parts, broken parts, and/or belt damage. **The Eject mechanism free from defects.**

Y N

Repair the Eject mechanism.

Enter dC330 [012-252]. Block and unblock the Eject Home Sensor with a piece of paper. **The display changes.**

Y N

Check the connections of P/J8700 and P/J8725. **P/J8700 and P/J8725 are securely connected.**

Y N

Connect P/J8700 and P/J8725 securely.

Check for an open or short circuit between J8700 and J8725. **The wires between J8700 and J8725 are OK.**

Y N

Repair the open or short circuit.

Measure the voltage between Finisher PWB J8700-9 (+) and GND (-). **The voltage is approx. +5VDC.**

Y N

Go to Finisher (Int) +24VDC/24VDC RTN and check the +5VDC circuit.

Measure the voltage between Finisher PWB J8700-8 (+) and GND (-). Block and unblock the Eject Home Sensor with a piece of paper. **The voltage changes.**

Y N

Replace the Eject Home Sensor (PL 22.10).

A B

A B

Check the wires and connectors for an intermittent open or short circuit. If the problem continues, replace the Finisher PWB (PL 22.7).

Enter [012-054] and [012-056] alternately. **The Eject Motor rotates.**

Y N

Check the connections of P/J8706 and P/J8741. **P/J8706 and P/J8741 are securely connected.**

Y N

Connect P/J8706 and P/J8741 securely.

Check for an open or short circuit between J8706 and J8741. **The wires between J8706 and J8741 are OK.**

Y N

Repair the open or short circuit.

Measure the voltage between Finisher PWB J8706-13 (+) and GND (-), and between J8706-15 (+) and GND (-). **The voltage is approx. +24VDC.**

Y N

Go to Finisher (Int) +24VDC/24VDC RTN and check the +24VDC circuit.

Check the Eject Motor drive mechanism for deformed parts, broken parts, and/or belt damage **The drive mechanism free from defects.**

Y N

Repair defects or damage to the drive mechanism.

Replace the Eject Motor (PL 22.9). If the problem continues, replace the Finisher PWB (PL 22.7).

Check the wires and connectors for an intermittent open or short circuit. If the problem continues, replace the Finisher PWB (PL 22.7).

312-211 (Int) Stacker Tray Fault

BSD-ON: BSD 12.8 Integrated Finisher Stacker Tray Control

- Within a specified time after the Stacker Tray started lifting up, the Stack Height Sensor did not detect the lifting up of the Stacker Tray.
- Within a specified time after the Stacker Tray started going down at initialization and during a job, the lower position of the tray (Full) could not be detected based on the changes in the Stacker Stack Sensor 1 and the Stacker Stack Sensor 2.

Initial Actions

- Check the Stack Height Sensor is properly installed, not broken, and has no foreign object.
- Check the Stacker Stack Sensors 1 and 2 are properly installed and have no foreign objects and that their actuators are not broken.
- Power Off/On.

Procedure

Check the drive mechanism to the Stacker Tray for a deformed or broken part and not-seated gears. **The mechanism is free from defects and the gears seat properly.**

Y N

Repair the mechanism.

Enter dC330 [012-267]. Block and unblock the Stack Height Sensor with a piece of paper. **The display changes.**

Y N

Check the connections of P/J8708 and P/J8727. **P/J8708 and P/J8727 are securely connected.**

Y N

Connect P/J8708 and P/J8727 securely.

Check for an open or short circuit between J8708 and J8727. **The wire between J8708 and J8727 are OK.**

Y N

Repair the open or short circuit.

Measure the voltage between Finisher PWB J8708-3 (+) and GND (-). **The voltage is approx. +5VDC.**

Y N

Go to Finisher (Int) +24VDC/24VDC RTN and check the +5VDC circuit.

Measure the voltage between Finisher PWB J8708-2 (+) and GND (-). Block and unblock the Stack Height Sensor with a piece of paper. **The voltage changes.**

Y N

Replace the Stack Height Sensor (PL 22.10).

Check the wires and connectors for an intermittent open or short circuit. If the problem continues, replace the Finisher PWB (PL 22.7).

Enter [012-278]. Block and unblock the Stacker Stack Sensor 1 by rotating the actuator. **The display changes.**

Y N

Check the connections of P/J8707 and P/J8722. **P/J8707 and P/J8722 are securely connected.**

Y N

Connect P/J8707 and P/J8722 securely.

Check for an open or short circuit between J8707 and J8722. **The wires between J8707 and J8722 are OK.**

Y N

Repair the open or short circuit.

Measure the voltage between Finisher PWB J8707-6 (+) and GND (-). **The voltage is approx. +5VDC.**

Y N

Go to Finisher (Int) +24VDC/24VDC RTN and check the +5VDC circuit.

Measure the voltage between Finisher PWB J8707-5 (+) and (-). Block and unblock the Stacker Stack Sensor 1 by rotating the actuator. **The voltage changes.**

Y N

Replace the Stacker Stack Sensor 1 (PL 22.8).

Check the wires and connectors for an intermittent open or short circuit. If the problem continues, replace the Finisher PWB (PL 22.7).

Enter [012-279]. Block and unblock the Stacker Stack Sensor 2 by rotating the actuator. **The display changes.**

Y N

Check the connections of P/J8707 and P/J8721. **P/J8707 and P/J8721 are securely connected.**

Y N

Connect P/J8707 and P/J8721 securely.

Check for an open or short circuit between J8707 and J8721. **The wires between J8707 and J8721 are OK.**

Y N

Repair the open or short circuit.

Measure the voltage between Finisher PWB J8707-3 (+) and GND (-). **The voltage is approx. +5VDC.**

Y N

Go to Finisher (Int) +24VDC/24VDC RTN and check the +5VDC circuit.

Measure the voltage between Finisher PWB J8707-2 (+) and GND (-). Block and unblock the Stacker Stack Sensor 2 by rotating the actuator. **The voltage changes.**

Y N

Replace the Stacker Stack Sensor 2 (PL 22.8).

Check the wires and connectors for an intermittent open or short circuit. If the problem continues, replace the Finisher PWB (PL 22.7).

Enter [012-060] and [012-061] alternately. **The Stacker Motor rotates.**

Y N

Check the connections of P/J8711 and P/J8736. **P/J8711 and P/J8736 are securely connected.**

Y N

Connect P/J8711 and P/J8736 securely.

Check for an open or short circuit between J8711 and P8736. **The wires between J8711 and P8736 are OK.**

Y N

Repair the open or short circuit.

Enter [012-060], measure the voltage between Finisher PWB J8711-1 (+) and GND (-). **The voltage changes.**

Y N

Go to Finisher (Int) +24VDC/24VDC RTN and check the +24VDC circuit. If the problem continues, replace the Finisher PWB (PL 22.7).

Enter [012-061], measure the voltage between Finisher PWB J8711-2 (+) and GND (-). **The voltage changes.**

Y N

Go to Finisher (Int) +24VDC/24VDC RTN and check the +24VDC circuit. If the problem continues, replace the Finisher PWB (PL 22.7).

Check the wires and connectors for an intermittent open and short circuit. If the problem continues, replace the Stacker Motor (PL 22.8).

Check the wires and connectors for an intermittent open or short circuit. If the problem continues, replace the Finisher PWB (PL 22.7).

312-221 (Int) Front Tamper Home Sensor ON Fault

BSD-ON:BSD 12.4 Integrated Finisher tamping and Offset

During the moving of the Front Tamper, when the Front Tamper Home Sensor was Off, to the home position, the Front Tamper Home Sensor did not detected turning On within a specified time after the Front Tamper started moving.

Initial Actions

- Check the Front Tamper Home Sensor is properly installed and has no foreign object and that the actuator is not broken.
- Power Off/ON.

Procedure

Check the Front Tamper for any foreign object, deformation and binding that prevents it from moving. **The Front Tamper is defects and binding.**

Y N

Repair the deformation and remove the foreign object(s) and the binding.

Check the drive mechanism to the Front Tamper for a deformed or broken part and not-seated gears. **The drive mechanism is free from defects and the gears seat properly.**

Y N

Repair the Front Tamper mechanism.

Enter dC330 [012-220]. Move the Front Tamper by hand to block and unblock the Front Tamper Home Sensor. **The display changes.**

Y N

Check the connections of P/J8700 and P/J8724. **P/J8700 and P/J8724 are securely connected.**

Y N

Connect P/J8700 and P/J8724 securely.

Check for an open or short circuit between J8700 and J8724. **The wires between J8700 and J8724 are OK.**

Y N

Repair the open wire or short circuit.

Measure the voltage between Finisher PWB J8700-6 (+) and GND (-). **The voltage is approx. +5VDC.**

Y N

Go to Finisher (Int) +24VDC/24VDC RTN and check the +5VDC circuit.

Measure the voltage between Finisher PWB J8700-5 (+) and GND (-). Move the Front Tamper by hand to block and unblock the Front Tamper Home Sensor. **The voltage changes.**

Y N

Replace the Front Tamper Home Sensor (PL 22.10).

Check the wires and connectors for an intermittent open or short circuit. If the problem continues, replace the Finisher PWB (PL 22.7).

A

Enter [012-020] and [012-023] alternately. **The Front Tamper Motor rotates.**

Y N

Check the connections of P/J8710, P/J8738A and J8738B. **P/J8710 P/J8738A and P/J8738B are securely connected.**

Y N

Connect P/J8710, P/J8738A and J8738B securely.

Check for an open or short circuit between J8710, P/J8738A and J8738B. **The wires between are OK.**

Y N

Repair the open or short circuit.

Measure the voltage between Finisher PWB J8710-5 (+) and GND (-), and between J8710-7 (+) and GND (-). **The voltage is approx. +24VDC.**

Y N

Go to Finisher (Int) +24VDC/24VDC RTN and check the +24VDC circuit. If the problem continues, replace the Finisher PWB (PL 22.7).

Replace the Front Tamper Motor (PL 22.10). If the problem continues, replace the Finisher PWB (PL 22.7).

Check the wires and connectors for an intermittent open or short circuit. If the problem continues, replace the Finisher PWB (PL 22.7).

A

312-223 (Int) Front Tamper Home Sensor OFF Fault

BSD-ON:BSD 12.4 Integrated Finisher tamping and Offset

- At the end of the operation to turn Off the Front Tamper Home Sensor that was On, the Front Tamper Home Sensor was not detected being Off.
- The Front Tamper Home Sensor should have turned Off and then the Front Tamper Motor stopped, but the Front Tamper Home Sensor was On.

Initial Actions

- Check the Front Tamper Home Sensor is properly installed and has no foreign object and that the actuator is not broken.
- Power Off/ON.

Procedure

Check the Front Tamper for any foreign object, deformation and binding that prevents it from moving. **The Front Tamper free from defects and binding.**

Y N

Repair the deformation and remove the foreign object(s) and the binding.

Check the drive mechanism to the Front Tamper for a deformed or broken part and not-seated gears. **The drive mechanism is free from defects and the gears seat properly.**

Y N

Repair the Front Tamper drive mechanism.

Enter dC330 [012-220]. Move the Front Tamper by hand to block and unblock the Front Tamper Home Sensor. **The display changes.**

Y N

Check the connections of P/J8700 and P/J8724. **P/J8700 and P/J8724 are securely connected.**

Y N

Connect P/J8700 and P/J8724 securely.

Check for an open or short circuit between J8700 and J8724. **The wires between J8700 and J8724 are OK.**

Y N

Repair the open or short circuit.

Measure the voltage between Finisher PWB J8700-6 (+) and GND (-). **The voltage is approx. +5VDC.**

Y N

Go to Finisher (Int) +24VDC/24VDC RTN and check the +5VDC circuit.

Measure the voltage between Finisher PWB J8700-5 (+) and GND (-). Move the Front Tamper by hand to block and unblock the Front Tamper Home Sensor. **The voltage changes.**

Y N

Replace the Front Tamper Home Sensor (PL 22.10).

Check the wires and connectors for an intermittent open or short circuit. If the problem continues, replace the Finisher PWB (PL 22.7).

A

Enter [012-020] and [012-023] alternately. **The Front Tamper Motor rotates.**

Y N

Check the connections of P/J8710, P/J8738A and J8738B. **P/J8710, P/J8738A and P/J8738B are securely connected.**

Y N

Connect P/J8710, P/J8738A and J8738B securely.

Check for an open wire or short circuit between J8710, P/J8738A and J8738B. **The wire between J8710, P/J8738A and J8738B are OK.**

Y N

Repair the open wire or short circuit.

Measure the voltage between Finisher PWB J8710-5 (+) and GND (-), and between J8710-7 (+) and GND (-). **Each voltage is approx. +24VDC.**

Y N

Go to Finisher (Int) +24VDC/24VDC RTN and check the +24VDC circuit. If the problem continues, replace the Finisher PWB (PL 22.7).

Replace the Front Tamper Motor (PL 22.10). If the problem continues, replace the Finisher PWB (PL 22.7).

Check the wires and connectors for an intermittent open or short circuit. If the problem continues, replace the Finisher PWB (PL 22.7).

A

312-224 (Int) Rear Tamper Home Sensor OFF Fault

BSD-ON:BSD 12.4 Integrated Finisher tamping and Offset

- At the end of the operation of trying to turn Off the Rear Tamper Home Sensor that was On, the Rear Tamper Home Sensor was not detected being Off.
- The Rear Tamper Home Sensor should have turned Off and then the Rear Tamper Motor stopped, but the Rear Tamper Home Sensor was On.

Initial Actions

- Check the Rear Tamper Home Sensor is properly installed and has no foreign object and that the actuator is not broken.
- Power Off/ON.

Procedure

Check the Rear Tamper for any foreign object, deformation and binding that prevents it from moving. **The Rear Tamper is free from defects and binding.**

Y N

Repair the deformation and remove the foreign object(s) and the binding.

Check the drive mechanism to the Rear Tamper for a deformed or broken part and not-seated gears. **The drive mechanism is in normal condition, not deformed or broken and with no not-seated gears.**

Y N

Repair the Rear Tamper drive mechanism.

Enter dC330 [012-221]. Move the Rear Tamper by hand to block and unblock the Rear Tamper Home Sensor. **The display of changes.**

Y N

Check the connections of P/J8700 and P/J8726. **P/J8700 and P/J8726 are securely connected.**

Y N

Connect P/J8700 and P/J8726 securely.

Check for an open or short circuit between J8700 and J8726. **The wires between J8700 and J8726 are OK.**

Y N

Repair the open wire or short circuit.

Measure the voltage between Finisher PWB J8700-12 (+) and GND (-). **The voltage is approx. +5VDC.**

Y N

Go to Finisher (Int) +24VDC/24VDC RTN and check the +5VDC circuit.

Measure the voltage between Finisher PWB J8700-11 (+) and GND (-). Move the Rear Tamper by hand to block and unblock the Rear Tamper Home Sensor. **The voltage changes.**

Y N

Replace the Rear Tamper Home Sensor (PL 22.9).

A B

Check the wires and connectors for an intermittent open or short circuit. If the problem continues, replace the Finisher PWB (PL 22.7).

Enter [012-026] and [012-029] alternately. **The Rear Tamper Motor rotates.**

Y N

Check the connections of P/J8710, P/J8737A and J8738B. **P/J8710, P/J8737A and J8738B are securely connected.**

Y N

Connect P/J8710, P/J8737A and J8738B securely.

Check for an open wire or short circuit between J8710, P/J8737A and J8737B. **The wire between J8710, P/J8737A and J8737B are OK.**

Y N

Repair the open or short circuit.

Measure the voltage between Finisher PWB J8710-1 (+) and GND (-), and between J8710-3 (+) and GND (-). **The voltage is approx. +24VDC.**

Y N

Go to Finisher (Int) +24VDC/24VDC RTN and check the +24VDC circuit. If the problem continues, replace the Finisher PWB (PL 22.7).

Repair the Rear Tamper Motor (PL 22.10). If the problem continues, replace the Finisher PWB (PL 22.7).

Check the wires and connectors for an intermittent open or short circuit. If the problem continues, replace the Finisher PWB (PL 22.7).

312-259 (Int) Eject Home Sensor ON Fault

BSD-ON:BSD 12.6 Integrated Finisher Set Eject (1 of 2)

In the Eject Motor's initializing operation and ejecting operation, one of the following is met.

- With the Eject Home Sensor Off, the Eject Motor started rotating in reverse direction. Within a specified time after that, the Eject Home Sensor was not detected turning On.
- With the Eject Home Sensor Off, the Eject Motor started rotating in reverse direction. The Eject Home Sensor should have been detected turning On and then the Eject Motor stopped, but then the Eject Home Sensor was not On.

Initial Actions

- Check the Eject Home Sensor is properly installed, not broken and has no foreign object.
- Power Off/ON.

Procedure

Check the Eject mechanism for a deformed or broken part and not-seated belts. **The mechanism is free from defects and belt damage.**

Y N

Repair the mechanism.

Enter dC330 [012-252]. Block and unblock the Eject Home Sensor. **The display changes.**

Y N

Check the connections of P/J8700 and P/J8725. **P/J8700 and P/J8725 are securely connected.**

Y N

Connect P/J8700 and P/J8725 securely.

Check for an open wire or short circuit between J8700 and J8725. **The wire between J8700 and J8725 is normally conductive with no open wire or short circuit.**

Y N

Repair the open wire or short circuit.

Measure the voltage between Finisher PWB J8700-9 (+) and GND (-). **The voltage is approx. +5VDC.**

Y N

Go to Finisher (Int) +24VDC/24VDC RTN and check the +5VDC circuit.

Measure the voltage between Finisher PWB J8700-8 (+) and GND (-). Block and unblock the Eject Home Sensor. **The voltage changes**

Y N

Replace the Eject Home Sensor (PL 22.10).

Check the wires and connectors for an intermittent open or short circuit. If the problem continues, replace the Finisher PWB (PL 22.7).

Enter [012-054] and [012-056] alternately. **The Eject Motor rotates.**

Y N

Check the connections of P/J8706 and P/J8741. **P/J8706 and P/J8741 are securely connected.**

A

Y N

Connect P/J8706 and P/J8741 securely.

Check for an open or short circuit between J8706 and J8741. **The wires between J8706 and J8741 are OK.**

Y N

Repair the open wire or short circuit.

Measure the voltage between Finisher PWB J8706-13 (+) and GND (-), and between J8706-15 (+) and GND (-). **Each voltage is approx. +24VDC.**

Y N

Go to Finisher (Int) +24VDC/24VDC RTN and check the +24VDC circuit. If the problem continues, replace the Finisher PWB (PL 22.7).

Replace the Eject Motor (PL 22.9). If the problem continues, replace the Finisher PWB (PL 22.7).

Check the wires and connectors for an intermittent open or short circuit. If the problem continues, replace the Finisher PWB (PL 22.7).

A

312-263 (Int) Rear Tamper Home Sensor ON Fault

BSD-ON: BSD 12.4 Integrated Finisher Tamping and Offset

During the moving of the Rear Tamper from when the Rear Tamper Home Sensor was Off to the home position, the Rear Tamper Home Sensor was not detected turning On within a specified time after the Rear Tamper started moving.

Initial Actions

- Check the Rear Tamper Home Sensor is properly installed and has no foreign object and that the actuator is not broken.
- Power Off/ON.

Procedure

Check the Rear Tamper for any foreign object, deformation and binding that prevents it from moving. **The Rear Tamper is free from defects and binding.**

Y N

Repair the deformation and remove the foreign object(s) and the binding.

Check the drive mechanism to the Rear Tamper for a deformed or broken part and not-seated gears. **The drive mechanism is free from defects and gears seat properly.**

Y N

Repair the Rear Tamper drive mechanism.

Enter dC330 [012-221]. Move the Rear Tamper by hand to block and unblock the Rear Tamper Home Sensor. **The display changes.**

Y N

Check the connections of P/J8700 and P/J8726. **P/J8700 and P/J8726 are securely connected.**

Y N

Connect P/J8700 and P/J8726 securely.

Check for an open wire or short circuit between J8700 and J8726. **The wire between J8700 and J8726 are OK.**

Y N

Repair the open or short circuit.

Measure the voltage between Finisher PWB J8700-12 (+) and GND (-). **The voltage is approx. +5VDC.**

Y N

Go to Finisher (Int) +24VDC/24VDC RTN and check the +5VDC circuit.

Measure the voltage between Finisher PWB J8700-11 (+) and GND (-). Move the Rear Tamper by hand to block and unblock the Rear Tamper Home Sensor. **The voltage changes.**

Y N

Replace the Rear Tamper Home Sensor (PL 22.9).

Check the wires and connectors for an intermittent open or short circuit. If the problem continues, replace the Finisher PWB (PL 22.7).

A

Enter [012-026] and [012-029] alternately. **The Rear Tamper Motor rotates.**

Y N

Check the connections of P/J8710, P/J8737A and J8738B. **P/J8710, P/J8737A and J8738B are securely connected.**

Y N

Connect P/J8710, P/J8737A and J8738B securely.

Check for an open or short circuit between J8710, P/J8737A and J8737B. **The wires between J8710, P/J8737A and J8737B are OK.**

Y N

Repair the open or short circuit.

Measure the voltage between Finisher PWB J8710-1 (+) and GND (-), and between J8710-3 (+) and GND (-). **Each voltage is approx. +24VDC.**

Y N

Go to Finisher (Int) +24VDC/24VDC RTN and check the +24VDC circuit. If the problem continues, replace the Finisher PWB (PL 22.7).

Replace the Rear Tamper Motor (PL 22.10). If the problem continues, replace the Finisher PWB (PL 22.7).

Check the wires and connectors for an intermittent open or short circuit. If the problem continues, replace the Finisher PWB (PL 22.7).

A

312-280 (Int) Eject Home Sensor OFF Fault

BSD-ON:BSD 12.6 Integrated Finisher Set Eject (1 of 2)

In the Eject Motor's initializing operation and ejecting operation, the Eject Motor had rotated forward for a time corresponding to a specified number of pulses since the Eject Home Sensor was On, and then the motor stopped, but then the Eject Home Sensor was not detected turning Off.

Initial Actions

- Check the Eject Home Sensor is properly installed, not broken and has no foreign object.
- Power Off/ON.

Procedure

Check the Eject mechanism for a deformed or broken part and not-seated belts. **The mechanism is free from defects and belt damage.**

Y N

Repair the mechanism.

Enter dC330 [012-252]. Block and unblock the Eject Home Sensor with a piece of paper. **The display changes.**

Y N

Check the connections of P/J8700 and P/J8725. **P/J8700 and P/J8725 are securely connected.**

Y N

Connect P/J8700 and P/J8725 securely.

Check for an open or short circuit between J8700 and J8725. **The wires between J8700 and J8725 are OK.**

Y N

Repair the open or short circuit.

Measure the voltage between Finisher PWB J8700-9 (+) and GND (-). **The voltage is approx. +5VDC.**

Y N

Go to Finisher (Int) +24VDC/24VDC RTN and check the +5VDC circuit.

Measure the voltage between Finisher PWB J8700-8 (+) and GND (-). Block and unblock the Eject Home Sensor with a piece of paper. **The voltage changes.**

Y N

Replace the Eject Home Sensor (PL 22.10).

Check the wires and connectors for an intermittent open or short circuit. If the problem continues, replace the Finisher PWB (PL 22.7).

Enter [012-054] and [012-056] alternately. **The Eject Motor rotates.**

Y N

Check the connections of P/J8706 and P/J8741. **P/J8706 and P/J8741 are securely connected.**

Y N

Connect P/J8706 and P/J8741 securely.

A B

Check for an open or short circuit between J8706 and J8741. **The wires between J8706 and J8741 are OK.**

Y N

Repair the open or short circuit.

Measure the voltage between Finisher PWB J8706-13 (+) and GND (-), and between J8706-15 (+) and GND (-). **Each voltage is approx. +24VDC.**

Y N

Go to Finisher (Int) +24VDC/24VDC RTN and check the +24VDC circuit. If the problem continues, replace the Finisher PWB (PL 22.7).

Replace the Eject Motor (PL 22.9). If the problem continues, replace the Finisher PWB (PL 22.7).

Check the wires and connectors for an intermittent open or short circuit. If the problem continues, replace the Finisher PWB (PL 22.7).

312-283 (Int) Set Clamp Home Sensor ON Fault

BSD-ON:BSD 12.7 Integrated Finisher Set Eject (2 of 2)

In the initialize operations each at Power On, when Interlock closed and at the start of a job, and in the Set Clamp Motor's ejecting operation, the Set Clamp Home Sensor was not detected turning On within a specified time after the start of the Set Clamp Motor operation.

Initial Actions

- Check the Set Clamp Home Sensor is properly installed and has no foreign object and that the actuator is not broken.
- Power Off/ON.

Procedure

Check the Set Clamp mechanism for a deformed or broken part and not-seated belts. **The mechanism is free from defects and belt damage.**

Y N

Repair the Set Clamp mechanism.

Enter dC330 [012-251]. Rotate the Set Clamp Shaft by hand to block and unblock the Set Clamp Home Sensor. **The display changes.**

Y N

Check the connections of P/J8707, J8742B, J8742A and P/J8723. **P/J8707, J8742B, J8742A and P/J8723 are securely connected.**

Y N

Connect P/J8707, J8742B, J8742A and P/J8723 securely.

Check for an open or short circuit between J8707 and J8742B, and between J8742A and J8723. **The wires between J8707 and J8742B and between J8742A and J8723 are OK.**

Y N

Repair the open or short circuit.

Measure the voltage between Finisher PWB J8707-9 (+) and GND (-). **The voltage is approx. +5VDC.**

Y N

Go to Finisher (Int) +24VDC/24VDC RTN and check the +5VDC circuit.

Measure the voltage between Finisher PWB J8707-8 (+) and GND (-). Rotate the Set Clamp Shaft by hand to block and unblock the Set Clamp Home Sensor. **The voltage changes.**

Y N

Replace the Set Clamp Home Sensor (PL 22.4).

Check the wires and connectors for an intermittent open or short circuit. If the problem continues, replace the Finisher PWB (PL 22.7).

Enter [012-017]. **The Set Clamp Motor rotates.**

Y N

Check the connections of P/J8706 and P/J8740. **P/J8706 and P/J8740 are securely connected.**

A

Y N

Connect P/J8706 and P/J8740 securely.

Check for an open or short circuit between J8706 and J8740. **The wires between J8706 and J8740 are OK.**

Y N

Repair the open or short circuit.

Measure the voltage between Finisher PWB J8706-9 (+) and GND (-), and between J8706-11 (+) and GND (-). **Each voltage is approx. +24VDC.**

Y N

Go to Finisher (Int) +24VDC/24VDC RTN and check the +24VDC circuit. If the problem continues, replace the Finisher PWB (PL 22.7).

Replace the Set Clamp Motor (PL 22.9). If the problem continues, replace the Finisher PWB (PL 22.7).

Check the wires and connectors for an intermittent open or short circuit. If the problem continues, replace the Finisher PWB (PL 22.7).

A

312-284 (Int) Set Clamp Home Sensor OFF Fault

BSD-ON:BSD 12.7 Integrated Finisher Set Eject (2 of 2)

In the initialize operations each at Power On, when Interlock closed and at the start of a job, and in the Set Clamp Motor's ejecting operation, the Set Clamp Home Sensor was not detected turning Off within a specified time after the start of the Set Clamp Motor operation.

Initial Actions

- Check the Set Clamp Home Sensor is properly installed and has no foreign object and that the actuator is not broken.
- Power Off/ON.

Procedure

Check the Set Clamp mechanism for a deformed or broken part and not-seated belts. **The mechanism is free from defects and belt damage.**

Y N

Repair the Set CLamp mechanism.

Enter dC330 [012-251]. Rotate the Set Clamp Shaft by hand to block and unblock the Set Clamp Home Sensor. **The display changes.**

Y N

Check the connections of P/J8707, J8742B, J8742A and P/J8723. **P/J8707, J8742B, J8742A and P/J8723 are securely connected.**

Y N

Connect P/J8707, J8742B, J8742A and P/J8723 securely.

Check for an open or short circuit between J8707 and J8742B, and between J8742A and J8723. **The wires between J8707 andJ8742B and between J8742A and J8723 are OK.**

Y N

Repair the open or short circuit.

Measure the voltage between Finisher PWB J8707-9 (+) and GND (-). **The voltage is approx. +5VDC.**

Y N

Go to Finisher (Int) +24VDC/24VDC RTN and check the +5VDC circuit.

Measure the voltage between Finisher PWB J8707-8 (+) and GND (-). Rotate the Set Clamp Shaft by hand to block and unblock the acceptance surface of the Set Clamp Home Sensor. **The voltage changes normally.**

Y N

Replace the Set Clamp Home Sensor (PL 22.4).

Check the wires and connectors for an intermittent open or short circuit. If the problem continues, replace the Finisher PWB (PL 22.7).

Enter [012-017]. **The Set Clamp Motor rotates.**

Y N

Check the connections of P/J8706 and P/J8740. **P/J8706 and P/J8740 are securely connected.**

A

Y N

Connect P/J8706 and P/J8740 securely.

Check for an open or short circuit between J8706 and J8740. **The wires between J8706 andJ8740 are OK.**

Y N

Repair the open or short circuit.

Measure the voltage between Finisher PWB J8706-9 (+) and GND (-), and between J8706-11 (+) and GND (-). **Each voltage is approx. +24VDC.**

Y N

Go to Finisher (Int) +24VDC/24VDC RTN and check the +24VDC circuit. If the problem continues, replace the Finisher PWB (PL 22.7).

Replace the Set Clamp Motor (PL 22.9). If the problem continues, replace the Finisher PWB (PL 22.7).

Check the wires and connectors for an intermittent open or short circuit. If the problem continues, replace the Finisher PWB (PL 22.7).

A

312-291 (Int) Stapler Fault

BSD-ON:BSD 12.5 Integrated Finisher Staple Control

Within a specified time after the Staple Motor started rotating in reverse direction, the Staple Head Home Sensor was never detected turning On.

Initial Actions

- Check that the Staple Assembly and the Cartridge are properly installed, not broken and include no foreign objects.
- Power Off/ON.

Procedure

Enter dC330 [012-042] and [012-043] alternately. **The Staple Motor rotates.**

Y **N**

Check the connections of P/J8705 and P/J8735. **P/J8705 and P/J8735 are securely connected.**

Y **N**

Connect P/J8705 and P/J8735 securely.

Check for an open or short circuit between J8705 and J8735. **The wires between J8705 and J8735 are OK.**

Y **N**

Repair the open wire or short circuit.

Enter [012-042] and [012-043] alternately. Measure the voltages between Finisher PWB J8705-3, 4, 5, 6 (+) and GND (-). **Each voltage changes.**

Y **N**

Check the wires and connectors for an intermittent open or short circuit. If the problem continues, replace the Finisher PWB (PL 22.7)

Replace the Staple Assembly (PL 22.4).

Enter [012-042] and [012-043] alternately. **The display changes.**

Y **N**

Check the connections of P/J8701 and P/J8731. **P/J8701 and P/J8731 are securely connected.**

Y **N**

Connect P/J8701 and P/J8731 securely.

Check for an open or short circuit between J8701 and J8731. **The wires between J8701 and J8731 are OK.**

Y **N**

Repair the open or short circuit.

Measure the voltage between Finisher PWB J8701-4 (+) and GND (-). **The voltage is approx. +5VDC.**

Y **N**

Go to Finisher (Int) +24VDC/24VDC RTN and check the +5VDC circuit.

A **B**

Measure the voltage between Finisher PWB P/J8701-5 (+) and GND (-). Enter [012-042] and [012-043] alternately. **The voltage changes.**

Y **N**

Replace the Staple Assembly (PL 22.4).

Check the wires and connectors for an intermittent open or short circuit. If the problem continues, replace the Finisher PWB (PL 22.7).

Check the wires and connectors for an intermittent open or short circuit. If the problem continues, replace the Finisher PWB (PL 22.7).

A **B**

312-301 (Int) Top Cover Interlock OPEN

BSD-ON:BSD 12.1 Integrated Finisher DC Power and Interlock Switching

The Top Cover Interlock Open was detected.

Initial Actions

- Check that the Top Cover can be opened and closed.
- Check the Finisher Top Cover Interlock Sensor and the Finisher Top Cover Interlock +24V Switch are properly installed, not broken, and have no foreign objects
- Power Off/ON.

Procedure

Check the following;

- Top Cover installation
- Finisher Top Cover Interlock Sensor for damage
- Finisher Top Cover Interlock +24V Switch actuator for any damage

These parts are in normal condition.

Y N

Repair or replace any of the parts that has a defect.

Enter dC330 [012-300]. Open and close the Top Cover to block and unblock the Finisher Top Cover Interlock Sensor. **The display changes.**

Y N

Check the connections of P/J8701 and P/J8730. **P/J8701 and P/J8730 are securely connected.**

Y N

Connect P/J8701 and P/J8730 securely.

Check for an open or short circuit between J8701 and J8730. **The wires between J8701 and J8730 are OK.**

Y N

Repair the open or short circuit.

Measure the voltage between Finisher PWB J8701-3 (+) and GND (-). **The voltage is approx. +5VDC.**

Y N

Go to Finisher (Int) +24VDC/24VDC RTN and check the +5VDC circuit.

Measure the voltage between Finisher PWB J8701-2 (+) and GND (-). Open and close the Top Cover to block and unblock the Finisher Top Cover Interlock Sensor. **The voltage changes.**

Y N

Replace the Finisher Top Cover Interlock Sensor (PL 22.3).

Check the wires and connectors for an intermittent open or short circuit. If the problem continues, replace the Finisher PWB (PL 22.7).

Measure the voltage between Finisher PWB J8702-1 (+) and GND (-). **The voltage is approx. +24VDC.**

Y N

Go to Finisher (Int) +24VDC/24VDC RTN and check the +24VDC circuit. If the problem continues, replace the Finisher PWB (PL 22.7).

Check the wires and connectors for an intermittent open or short circuit. If the problem continues, replace the Finisher PWB (PL 22.7).

312-302 (Int) Front Cover Interlock OPEN

BSD-ON:BSD 12.1 Integrated Finisher DC Power and Interlock Switching

The Front Cover Interlock Open was detected.

Initial Actions

- Check that the Top Cover can be opened and closed.
- Check that the Finisher Front Interlock Switch is properly installed, not broken, and has no foreign object.
- Power Off/ON.

Procedure

Check the following;

- Front Cover installation
- hinges for any damage
- Finisher Top Cover Interlock Sensor for any damage

Thee above parts are OK.

Y N

Repair or replace any of the parts that are defected.

Enter dC330 [012-302]. Open and close the Front Cover to turn On and Off the Finisher Front Interlock Switch. **The display changes.**

Y N

Connect the connections of P/J8702 and P/J8733. **P/J8702 and P/J8733 are securely connected.**

Y N

Connect P/J8702 and P/J8733 securely.

Check for an open or short circuit between J8702 and J8733. **The wires between J8702 and J8733 are OK.**

Y N

Repair the open or short circuit.

Measure the voltage between Finisher PWB J8702-4 (+) and GND (-). Open and close the Front Cover to turn On and Off the Finisher Front Interlock Switch. **The voltage changes.**

Y N

Replace the Finisher Front Interlock Switch (PL 22.7).

Check the wires and connectors for an intermittent open or short circuit. If the problem continues, replace the Finisher PWB (PL 22.7).

Measure the voltage between Finisher PWB J8702-1 (+) and (-). **The voltage is approx. +24VDC.**

Y N

Go to Finisher (Int) +24VDC/24VDC RTN and check the +24VDC circuit.

Check the wires and connectors for an intermittent open or short circuit. If the problem continues, replace the Finisher PWB (PL 22.7).

312-903 (Int) Paper Remains at Compiler Exit Sensor

BSD-ON:BSD 12.3 Integrated Finisher Transportation

- At Power On, the Compiler Exit Sensor detected paper.
- While the Main Motor was operating at initialization at Power On, the Compiler Exit Sensor detected paper.
- When the Cycle down operation at the end of a job was complete, the Compiler Exit Sensor was On.

Initial Actions

- Check the power supply voltage at the customer site for a drop.
- Check the Compiler Exit Sensor is properly installed and free from foreign objects and that the actuator is not binding.
- Power Off/ON.

Procedure

Check for paper remaining on the Compiler Exit Sensor and how it is installed. **The sensor is properly installed with no paper left there.**

Y N

Remove the remaining paper and reinstall the sensor properly.

Run Component Control [012-150].

Enter dC330 [012-150]. Actuate the Compiler Exit Sensor. **The display changes.**

Y N

Check the connections of P/J8709 and P/J8728. **P/J8709 and P/J8728 are securely connected.**

Y N

Connect P/J8709 and P/J8728.

Check for an open or short circuit between J8709 and J8728. **The wires between J8709 and J8728 are OK.**

Y N

Repair the open or short circuit.

Measure the voltage between Finisher PWB J8709-3 (+) and GND (-). **The voltage is approx.+5VDC.**

Y N

Go to Finisher (Int) +24VDC/24VDC RTN and check the +5VDC circuit.

Measure the voltage between Finisher PWB J8702-2 (+) and GND (-). Actuate the Compiler Exit Sensor. **The voltage changes.**

Y N

Replace the Compiler Exit Sensor (PL 22.5).

Check the wires and connectors for an intermittent open or short circuit. If the problem continues, replace the Finisher PWB (PL 22.7).

Check the wires and connectors for an intermittent open or short circuit. If the problem continues, replace the Finisher PWB (PL 22.7).

312-928 (Int) Scratch Sheet Compile

Paper was detected that was either out of spec, in poor condition (wrinkled, curled) and was ejected to the compiler.

NOTE: *This Code is an operation message. If this fail code is frequently declared, perform the procedure below.*

Initial Actions

- Check that the Top Cover can be opened and closed.
- Power Off/On.

Procedure

Check the specifications of paper. **The paper is in spec.**

Y **N**

Replace the paper with new paper that is in spec.

Check the condition of the paper. **The paper is in normal condition without any problem that causes the paper to be bent (dog eared) or jam.**

Y **N**

Resolve any problem that causes the paper to be bent or caught.

Check for a Fault Code. **Another Fault Code is displayed.**

Y **N**

If the problem continues, replace the Finisher PWB (PL 22.7).

Go to the appropriate Fault Code.

312-930 (Int) Stacker Tray Full RAP

The output paper stacked on the Finisher Stacker Tray reaches capacity (for mixed paper size).

Initial Actions

- Remove the paper from the Stacker Tray
- Power Off/On

If the fault remains, perform the Procedure

Procedure

Go to the 312-211 (Int) RAP.

312-935 (Int) Paper Remains at Entrance Sensor

BSD-ON:BSD 12.3 Integrated Finisher Transportation

- At Power On the Finisher Entrance Sensor detected paper.
- While the Main Motor was operating at initialization at Power On, the Finisher Entrance Sensor detected paper.
- When the Cycle down operation at the end of a job was complete, the Finisher Entrance Sensor was On.

Initial Actions

- Check the power supply voltage at the customer site for a drop.
- Check the Finisher Entrance Sensor is properly installed and free from foreign objects and that the actuator is not binding.
- Power Off/ON.

Procedure

Check for paper remaining on the Finisher Entrance Sensor and how it is installed. **The sensor is properly installed and free from paper.**

Y N

Remove the remaining paper and reinstall the sensor properly.

Enter dC330 [012-140]. Move the Finisher Entrance Sensor actuator by hand or with a piece of paper. **The display changes.**

Y N

Check the connections of P/J8709 and P/J8729. **P/J8709 and P/J8729 are securely connected.**

Y N

Connect P/J8709 and P/J8729 securely.

Check for an open or short circuit between J8709 and J8729. **The wire between J8709 and J8729 are OK.**

Y N

Repair the open or short circuit.

Measure the voltage between J8709-6 (+) on the Finisher PWB and GND (-). **The voltage is approx. +5VDC.**

Y N

Go to Finisher (Int) +24VDC/24VDC RTN and check the +5VDC circuit.

Measure the voltage between J8709-5 (+) on the Finisher PWB and GND (-). Actuate the Finisher Entrance Sensor. **The voltage changes.**

Y N

Replace the Finisher Entrance Sensor (PL 22.5).

Check the wires and connectors for an intermittent open or short circuit. If the problem continues, replace the Finisher PWB (PL 22.7).

Check the wires and connectors for an intermittent open or short circuit. If the problem continues, replace the Finisher PWB (PL 22.7).

312-976 (Int) Staple Fail

Staple Head Home Sensor is not turned on within 450msec after Staple Head Close operation is started, and Staple Head Home Sensor is turned on after reverse operation is started.

Procedure

Go to the 312-291 (Int) RAP.

312-977 (Int) Staple Ready Fail

Staple Head void stapling reached a specified number of times (13) during the Staple Head initialization.

Procedure

Check that staples are present and correctly installed. If the problem continues, go to the 312-291 (Int) RAP.

312-979 (Int) Stapler Near Empty RAP

BSD-ON: BSD 12.5 Integrated Finisher Staple Control

BSD-ON: BSD 12.1 Integrated Finisher DC Power and Interlock Switching

The Staple Cartridge is nearly empty.

Initial Actions

If the staples are nearly empty, replace the Cartridge. If adequate staples are present, remove and reinstall the Cartridge several times. Check for dirt or debris blocking the Cartridge from correct seating. If the problem continues, perform the Procedure.

Procedure

Execute dC330 [012-242 Low Staple Sensor]. Install and remove the Staple Cartridge. **The display changes.**

Y **N**

Disconnect P/J8731. **There is +5 VDC from P/J8701 pin 9 to GND.**

Y **N**

Replace the Finisher PWB (PL 22.7).

Check the wires between P/J8701 and P/J8731 for an open circuit or a short circuit. If the wires are OK, replace the Staple Assembly (PL 22.4). If the problem persists, replace the Finisher PWB (PL 22.7).

If the fault remains, replace the Finisher PWB (PL 22.7).

312-111 (LX) H-Transport Entrance Sensor Off Jam A

BSD-ON:BSD 12.14 Office Finisher LX Horizontal Transportation

The H-Transport Entrance Sensor did not turn off within the specified time after it turned on.

Procedure

Check the H-Transport Drive Rolls (PL 23.4) and Pinch Rolls (PL 23.3) for wear or contamination. Check for obstructions or damage in the paper path. **The Paper Path is OK.**

Y N

Clean or replace as required.

Execute dC330 [012-190], H-Transport Entrance Sensor. Actuate the H-Transport Entrance Sensor (PL 23.4). **The display changes.**

Y N

Check the wire between J8861 pin 2 and J8987 pin 6 for an open or short circuit, or a loose or damaged connector. **The wire is OK.**

Y N

Repair/reconnect as required.

Measure the voltage between J8987, pins 4 and 5 on the Finisher PWB (BSD 12.14 Office Finisher LX Horizontal Transportation). **The voltage is approx. +5VDC.**

Y N

Replace the Finisher PWB (PL 23.16).

Measure the voltage between J8987, pin 6 on the Finisher PWB and GND (BSD 12.14 Office Finisher LX Horizontal Transportation).Actuate the H-Transport Entrance Sensor. **The voltage changes.**

Y N

Replace the H-Transport Entrance Sensor (PL 23.4).

Replace the Finisher PWB (PL 23.16).

Power OFF. Open the H-Transport Top Cover. Cheat the H-Transport Interlock Sensor. Power ON. **The H-Transport Belt rotates.**

Y N

Check the wires between P/J8862 on the H-Transport Motor and J8987 on the Finisher PWB for an open or short circuit, or a loose or damaged connector. **The wires are OK.**

Y N

Repair/reconnect as required.

Measure the resistance of the H-Transport Motor between each pin J8862-1/2/5/6 (BSD 12.14 Office Finisher LX Horizontal Transportation). **The resistance is approx. 20 Ohm.**

Y N

Replace the H-Transport Motor (PL 23.4).

Replace the Finisher PWB (PL 23.16). If the problem persists, replace the H-Transport Motor (PL 23.4).

Check the H-Transport Entrance Sensor and H-Transport Motor circuits for an intermittent condition. If the problem continues, replace the Finisher PWB (PL 23.16).

312-112 (LX) H-Transport Entrance Sensor On Jam A

BSD-ON:BSD 12.14 Office Finisher LX Horizontal Transportation)

After the Fuser Exit Sensor turned on, the H-Transport Entrance Sensor did not turn on within the specified time.

Procedure

Check the H-Transport Drive Rolls (PL 23.4) and Pinch Rolls (PL 23.3) for wear or contamination. Check for obstructions or damage in the paper path. **The Paper Path is OK.**

Y N

Clean or replace as required.

Execute dC330 [012-190], H-Transport Entrance Sensor. Actuate the H-Transport Entrance Sensor (PL 23.4). **The display changes.**

Y N

Check the wire between J8861 pin 2 and J8987 pin 6 for an open or short circuit, or a loose or damaged connector. **The wire is OK.**

Y N

Repair/reconnect as required.

Measure the voltage between J8987, pins 4 and 5 on the Finisher PWB (BSD 12.14 Office Finisher LX Horizontal Transportation). **The voltage is approx. +5VDC.**

Y N

Replace the Finisher PWB (PL 23.16).

Measure the voltage between J8987, pin 6 on the Finisher PWB and GND (BSD 12.14 Office Finisher LX Horizontal Transportation). Actuate the H-Transport Entrance Sensor. **The voltage changes.**

Y N

Replace the H-Transport Entrance Sensor (PL 23.4).

Replace the Finisher PWB (PL 23.16).

Power OFF. Open the H-Transport Top Cover. Cheat the H-Transport Interlock Sensor. Power ON. **The H-Transport Belt rotates.**

Y N

Check the wires between P/J8862 on the H-Transport Motor and J8987 on the Finisher PWB for an open or short circuit, or a loose or damaged connector. **The wires are OK.**

Y N

Repair/reconnect as required.

Measure the resistance of the H-Transport Motor between each pin J8862-1/2/5/6 (BSD 12.14 Office Finisher LX Horizontal Transportation). **The resistance is approx. 20 Ohm.**

Y N

Replace the H-Transport Motor (PL 23.4).

Replace the Finisher PWB (PL 23.16). If the problem persists, replace the H-Transport Motor (PL 23.4).

A

Check the H-Transport Entrance Sensor and H-Transport Motor circuits for an intermittent condition. If the problem continues, replace the Finisher PWB (PL 23.16).

312-126 (LX) H-Transport Entrance Sensor Off Jam B

BSD-ON:BSD 12.14 Office Finisher LX Horizontal Transportation

After the H-Transport Entrance Sensor turned On, the H-Transport Entrance Sensor did not turn Off within the specified time.

Procedure

Check the H-Transport Drive Rolls (PL 23.4) and Pinch Rolls (PL 23.3) for wear or contamination. Check for obstructions or damage in the paper path. **The Rolls and Paper Path are OK.**

Y **N**

Clean or replace as required.

Execute dC330 [012-190], H-Transport Entrance Sensor. Actuate the H-Transport Entrance Sensor (PL 23.4). **The display changes.**

Y **N**

Check the wire between J8861 pin 2 and J8987 pin 6 for an open or short circuit, or a loose or damaged connector. **The wire is OK.**

Y **N**

Repair/reconnect as required.

Measure the voltage between J8987, pins 4 and 5 on the Finisher PWB (BSD 12.14 Office Finisher LX Horizontal Transportation). **The voltage is approx. +5VDC.**

Y **N**

Replace the Finisher PWB (PL 23.16).

Measure the voltage between J8987, pin 6 on the Finisher PWB and GND (BSD 12.14 Office Finisher LX Horizontal Transportation).Actuate the H-Transport Entrance Sensor. **The voltage changes.**

Y **N**

Replace the H-Transport Entrance Sensor (PL 23.4).

Replace the Finisher PWB (PL 23.16).

Power OFF. Open the H-Transport Top Cover. Cheat the H-Transport Interlock Sensor. Power ON. **The H-Transport Belt rotates.**

Y **N**

Check the wires between P/J8862 on the H-Transport Motor and J8987 on the Finisher PWB for an open or short circuit, or a loose or damaged connector. **The wires are OK.**

Y **N**

Repair/reconnect as required.

Measure the resistance of the H-Transport Motor between each pin J8862-1/2/5/6 (BSD 12.14 Office Finisher LX Horizontal Transportation). **The resistance is approx. 20 Ohm.**

Y **N**

Replace the H-Transport Motor (PL 23.4).

Replace the Finisher PWB (PL 23.16). If the problem persists, replace the H-Transport Motor (PL 23.4).

A

A

Check the H-Transport Entrance Sensor and H-Transport Motor circuits for an intermittent condition. If the problem continues, replace the Finisher PWB (PL 23.16).

312-131 (LX) H-Transport Entrance Sensor On Jam B

BSD-ON:BSD 12.14 Office Finisher LX Horizontal Transportation

After the Fuser Exit Sensor turned On, the H-Transport Entrance Sensor did not turn On within the specified time.

Procedure

Check the H-Transport Drive Rolls (PL 23.4) and Pinch Rolls (PL 23.3) for wear or contamination. Check for obstructions or damage in the paper path. Check the return Spring (PL 23.11) item 38 and replace if damaged or missing. **The Rolls and Paper Path are OK.**

Y N

Clean or replace as required.

Execute dC330 [012-190], H-Transport Entrance Sensor. Actuate the H-Transport Entrance Sensor (PL 23.4). **The display changes.**

Y N

Check the wire between J8861 pin 2 and J8987 pin 6 for an open or short circuit, or a loose or damaged connector. **The wire is OK.**

Y N

Repair/reconnect as required.

Measure the voltage between J8987, pins 4 and 5 on the Finisher PWB (BSD 12.14 Office Finisher LX Horizontal Transportation). **The voltage is approx. +5VDC.**

Y N

Replace the Finisher PWB (PL 23.16).

Measure the voltage between J8987, pin 6 on the Finisher PWB and GND (BSD 12.14 Office Finisher LX Horizontal Transportation).Actuate the H-Transport Entrance Sensor. **The voltage changes.**

Y N

Replace the H-Transport Entrance Sensor (PL 23.4).

Replace the Finisher PWB (PL 23.16).

Power OFF. Open the H-Transport Top Cover. Cheat the H-Transport Interlock Sensor. Power ON. **The H-Transport Belt rotates.**

Y N

Check the wires between P/J8862 on the H-Transport Motor and J8987 on the Finisher PWB for an open or short circuit, or a loose or damaged connector. **The wires are OK.**

Y N

Repair/reconnect as required.

Measure the resistance of the H-Transport Motor between each pin J8862-1/2/5/6 (BSD 12.14 Office Finisher LX Horizontal Transportation). **The resistance is approx. 20 Ohm.**

Y N

Replace the H-Transport Motor (PL 23.4).

Replace the Finisher PWB (PL 23.16). If the problem persists, replace the H-Transport Motor (PL 23.4).

A

A

Check the H-Transport Entrance Sensor and H-Transport Motor circuits for an intermittent condition. If the problem continues, replace the Finisher PWB (PL 23.16).

312-132 (LX) Finisher Entrance Sensor On Jam

BSD-ON: BSD 12.16 Office Finisher LX Transportation

After the Fuser Exit Sensor turned On, the Finisher Entrance Sensor did not turn On within the specified time.

Procedure

Execute dC330 [012-100], Finisher Entrance Sensor. Actuate the Finisher Entrance Sensor (PL 23.14). **The display changes.**

Y N

Check the wire between J8868 pin 2 and P/J8988 pin 2 for an open or short circuit, or a loose or damaged connector. **The wire is OK.**

Y N

Repair/reconnect as required.

Measure the voltage between P/J8988, pins 3 and 1 on the Finisher PWB (BSD 12.16 Office Finisher LX Transportation). **The voltage is approx. P/J8988 +5VDC.**

Y N

Replace the Finisher PWB (PL 23.16).

Measure the voltage between P/J8988, pin 2 on the Finisher PWB and GND (BSD 12.16 Office Finisher LX Transportation).Actuate the Finisher Entrance Sensor. **The voltage changes.**

Y N

Replace the Finisher Entrance Sensor (PL 23.14).

Replace the Finisher PWB (PL 23.16).

Execute dC330 [012-038], Transport Motor. **The Transport Motor rotates.**

Y N

Check the wires between P/J8879 on the Transport Motor and P/J8983 on the Finisher PWB for an open or short circuit, or a loose or damaged connector. **The wires are OK.**

Y N

Repair/reconnect as required.

Measure the resistance of the Transport Motor between each pin J8879-1/2/5/6 (BSD 12.16 Office Finisher LX Transportation). **The resistance is approx. 20 Ohm.**

Y N

Replace the Transport Motor (PL 23.13).

Replace the Finisher PWB (PL 23.16). If the problem persists, replace the Transport Motor (PL 23.13).

Check the Entrance Roller, Paddle Shaft and Eject Belt for wear, damage or contamination (PL 23.13).
Check the return Spring (PL 23.11) item 38 and replace if damaged or missing.
Check the Finisher Entrance Sensor and Transport Motor circuits for an intermittent condition.
If the problem continues, replace the Finisher PWB (PL 23.16).

312-151 (LX) Compiler Exit Sensor Off Jam

BSD-ON:BSD 12.16 Office Finisher LX Transportation

After the Compiler Exit Sensor turned On, the Compiler Exit Sensor did not turn Off within the specified time.

Procedure

Execute dC330 [012-150], Compiler Exit Sensor. Actuate the Compiler Exit Sensor (PL 23.14). **The display changes.**

Y N

Check the wire between J8869 pin 2 and P/J8988 pin 5 for an open or short circuit, or a loose or damaged connector. **The wire is OK.**

Y N

Repair/reconnect as required.

Measure the voltage between P/J8988, pins 6 and 4 on the Finisher PWB (BSD 12.16 Office Finisher LX Transportation). **The voltage is approx. +5VDC.**

Y N

Replace the Finisher PWB (PL 23.16).

Measure the voltage between P/J8988, pin 5 on the Finisher PWB and GND (BSD 12.16 Office Finisher LX Transportation).Actuate the Compiler Exit Sensor. **The voltage changes.**

Y N

Replace the Compiler Exit Sensor (PL 23.4).

Replace the Finisher PWB (PL 23.16).

Execute dC330 [012-038], Transport Motor. **The Transport Motor rotates.**

Y N

Check the wires between P/J8879 on the Transport Motor and P/J8983 on the Finisher PWB for an open or short circuit, or a loose or damaged connector. **The wires are OK.**

Y N

Repair/reconnect as required.

Measure the resistance of the Transport Motor between each pin J8879-1/2/5/6 (BSD 12.16 Office Finisher LX Transportation). **The resistance is approx. 20 Ohm.**

Y N

Replace the Transport Motor (PL 23.13).

Replace the Finisher PWB (PL 23.16). If the problem persists, replace the Transport Motor (PL 23.13).

Check the Exit Roller, Paddle Shaft and Eject Belt for wear, damage or contamination (PL 23.13).
Check the return Spring (PL 23.11) item 38 and replace if damaged or missing.
Check the Compiler Exit Sensor and Transport Motor circuits for an intermittent condition.
If the problem continues, replace the Finisher PWB (PL 23.16).

312-152 (LX) Compiler Exit Sensor On Jam

BSD-ON:BSD 12.16 Office Finisher LX Transportation

After the H-Transport Exit Sensor turned On, the Compiler Exit Sensor did not turn On within the specified time.

Initial Actions

- Power OFF/ON

Procedure

Execute dC330 [012-150], Compiler Exit Sensor. Actuate the Compiler Exit Sensor (PL 23.14). **The display changes.**

Y N

Check the wire between J8869 pin 2 and P/J8988 pin 5 for an open or short circuit, or a loose or damaged connector. **The wire is OK.**

Y N

Repair/reconnect as required.

Measure the voltage between P/J8988, pins 6 and 4 on the Finisher PWB (BSD 12.16 Office Finisher LX Transportation). **The voltage is approx. +5VDC.**

Y N

Replace the Finisher PWB (PL 23.16).

Measure the voltage between P/J8988, pin 5 on the Finisher PWB and GND (BSD 12.16 Office Finisher LX Transportation).Actuate the Compiler Exit Sensor. **The voltage changes.**

Y N

Replace the Compiler Exit Sensor (PL 23.14).

Replace the Finisher PWB (PL 23.16).

Execute dC330 [012-038], Transport Motor. **The Transport Motor rotates.**

Y N

Check the wires between P/J8879 on the Transport Motor and P/J8983 on the Finisher PWB for an open or short circuit, or a loose or damaged connector. **The wires are OK.**

Y N

Repair/reconnect as required.

Measure the resistance of the Transport Motor between each pin J8879-1/2/5/6 (BSD 12.16 Office Finisher LX Transportation). **The resistance is approx. 20 Ohm.**

Y N

Replace the Transport Motor (PL 23.13).

Replace the Finisher PWB (PL 23.16). If the problem persists, replace the Transport Motor (PL 23.13).

Check the Exit Roller, Entrance Roller, Paddle Shaft and Eject Belt for wear, damage or contamination (PL 23.13).
Check the return Spring (PL 23.11) item 38 and replace if damaged or missing.
Check the Compiler Exit Sensor and Transport Motor circuits for an intermittent condition.

If the problem continues, replace the Finisher PWB (PL 23.16).

312-161 (LX) Finisher Set Eject Jam

BSD-ON:BSD 12.19 Office Finisher LX Tamping and Offset (2 of 2)

BSD-ON:BSD 12.22 Office Finisher LX Eject Control (1 of 2)

After the Eject Motor turned On, the Compiler Tray No Paper Sensor did not turn Off within the specified time.

Procedure

Enter dC330 [012-151], Compiler Tray No Paper Sensor. Select **Start**. Actuate the Compiler Tray No Paper Sensor. **The display changes.**

Y N

Check the wire between J8880 pin 2 and J8984 pin 2 on the Finisher PWB for an open or short circuit, or a loose or damaged connector. **The wire is OK.**

Y N

Repair/reconnect as required.

Measure the voltage between J8984 pins 3 and 1 on the Finisher PWB (BSD 12.22 Office Finisher LX Eject Control (1 of 2)). **The voltage is approx. +5VDC.**

Y N

Replace the Finisher PWB (PL 23.16).

Measure the voltage between J8984 pin 2 on the Finisher PWB and GND (BSD 12.19 Office Finisher LX Tamping and Offset (2 of 2)). Actuate the Compiler Tray No Paper Sensor. **The voltage changes.**

Y N

Replace the Compiler Tray No Paper Sensor (PL 23.12).

Replace the Finisher PWB (PL 23.16).

Alternately execute dC330 [012-054 Eject Motor FORWARD LO] and dC330 [012-055 Eject Motor FORWARD HI]. **The Eject Motor starts up.**

Y N

Check the wires between P/J8878 on the Eject Motor and P/J8983 on the Finisher PWB (BSD 12.22 Office Finisher LX Eject Control (1 of 2)) for an open or short circuit, or a loose or damaged connector. **The wires are OK.**

Y N

Repair/reconnect as required.

Measure the resistance of the Eject Motor between each point of J8878-1/3/4/6 (BSD 12.22 Office Finisher LX Eject Control (1 of 2)). **The resistance is approx. 20 Ohm.**

Y N

Replace the Eject Motor (PL 23.11).

Replace the Eject Motor (PL 23.11). If the problem persists, replace the Finisher PWB (PL 23.16).

Check the Exit Roller, Entrance Roller, Paddle Shaft and Eject Belt for wear, damage or contamination (PL 23.13).
Check the return Spring (PL 23.11) item 38 and replace if damaged or missing.

Check the Compiler Tray No Paper Sensor and Eject Motor circuits for an intermittent condition.
If the problem continues, replace the Finisher PWB (PL 23.16).

312-211 (LX) Stacker Tray Fault

BSD-ON:BSD 12.24 Office Finisher LX Stacker Tray Control

Stack Height Sensor 1 is not ON within the specified time after stacker tray starts elevating.While Stacker Tray is elevating or lowering, the state of the Encoder Sensor does not change within the specified time.

Initial Actions

- Check for obstructions under the tray.
- Check the operation of the Stacker Height Sensor 1 actuator.
- Check the tray raise/lower mechanism for damage or contamination.

Procedure

Execute dC330 [012-264], Stacker Height Sensor 1. Actuate the Stacker Height Sensor 1. **The display changes.**

Y **N**

Check the wire between J8873 pin 2 and P/J8988 pin 17 for an open or short circuit, or a loose or damaged connector. **The wire is OK.**

Y **N**

Repair/reconnect as required.

Measure the voltage between P/J8988, pins 16 and 18 on the Finisher PWB (BSD 12.24 Office Finisher LX Stacker Tray Control). **The voltage is approx. +5VDC.**

Y **N**

Replace the Finisher PWB (PL 23.16).

Measure the voltage between P/J8988, pin 17 on the Finisher PWB and GND (BSD 12.24 Office Finisher LX Stacker Tray Control).Actuate the Stacker Height Sensor 1. **The voltage changes.**

Y **N**

Replace the Stacker Height Sensor 1 (PL 23.11).

Replace the Finisher PWB (PL 23.16).

Execute dC330 [012-263], Stacker Encoder Sensor. Manually rotate the Encoder (PL 23.7) to block and unblock the sensor. **The display changes.**

Y **N**

Check the wire between J8874 pin 2 and P/J8988 pin 23 for an open or short circuit, or a loose or damaged connector. **The wire is OK.**

Y **N**

Repair/reconnect as required.

Measure the voltage between P/J8988, pins 22 and 24 on the Finisher PWB (BSD 12.24 Office Finisher LX Stacker Tray Control). **The voltage is approx. +5VDC.**

Y **N**

Replace the Finisher PWB (PL 23.16).

Measure the voltage between P/J8988, pin 23 on the Finisher PWB and GND (BSD 12.24 Office Finisher LX Stacker Tray Control). Manually rotate the Encoder (PL 23.7) to block and unblock the Stacker Encoder Sensor. **The voltage changes.**

A

A

Y N

Replace the Stacker Encoder Sensor (PL 23.7).

Replace the Finisher PWB (PL 23.16).

Alternately execute dC330 [012-060], Stacker Motor Up, and [012-061], Stacker Motor Down. **The Stacker Motor (PL 23.7) Moves.**

Y N

There is +24 VDC from P/J8986 pin 12 to GND (BSD 12.12)

Y N

Go to BSD 12.12 Office Finisher LX Interlock Switching and check the circuit of the Option Switch (PL 23.9). Repair/reconnect as required.

Check the wires between P/J8986 pins 11 and 12, and the Stacker Motor for an open or short circuit, or a loose or damaged connector. **The wires are OK.**

Y N

Repair/reconnect as required.

Replace the Stacker Elevator Motor (PL 23.7). If the problem persists, replace the Finisher PWB (PL 23.16).

Replace the Finisher PWB (PL 23.16).

312-212 (LX) Stacker Tray Upper Limit Fault

BSD-ON:BSD 12.24 Office Finisher LX Stacker Tray Control

The stacker has continued to elevate after the defined period of time has passed since Stacker No Paper Sensor is ON during stacker elevation.

Initial Actions

- Check for obstructions under the tray.

  NOTE: *If the carriage is uneven due to contact with an obstruction, go to REP 23.29 and follow to make tray sit evenly.*

- Check the operation of the Stacker Height Sensor actuators.
- Check the tray raise/lower mechanism for damage or contamination.

Procedure

Execute dC330 [012-264], Stacker Height Sensor 1. Actuate the Stacker Height Sensor 1. **The display changes.**

Y N

Check the wire between J8873 pin 2 and P/J8988 pin 17 for an open or short circuit, or a loose or damaged connector. **The wire is OK.**

Y N

Repair/reconnect as required.

Measure the voltage between P/J8988, pins 16 and 18 on the Finisher PWB (BSD 12.24 Office Finisher LX Stacker Tray Control). **The voltage is approx. +5VDC.**

Y N

Replace the Finisher PWB (PL 23.16).

Measure the voltage between P/J8988, pin 17 on the Finisher PWB and GND (BSD 12.24 Office Finisher LX Stacker Tray Control).Actuate the Stacker Height Sensor 1. **The voltage changes.**

Y N

Replace the Stacker Height Sensor 1 (PL 23.11).

Replace the Finisher PWB (PL 23.16).

Execute dC330 [012-265], Stacker Height Sensor 2. Block and unblock the Stacker Height Sensor 2. **The display changes.**

Y N

Check the wire between J8874 pin 2 and P/J8988 pin 20 for an open or short circuit, or a loose or damaged connector. **The wire is OK.**

Y N

Repair/reconnect as required.

Measure the voltage between P/J8988, pins 19 and 21 on the Finisher PWB (BSD 12.24 Office Finisher LX Stacker Tray Control). **The voltage is approx. +5VDC.**

Y N

Replace the Finisher PWB (PL 23.16).

A B

A B

Measure the voltage between P/J8988, pin 20 on the Finisher PWB and GND (BSD 12.24 Office Finisher LX Stacker Tray Control).Actuate the Stacker Height Sensor 1. **The voltage changes.**

Y N

Replace the Stacker Height Sensor 2 (PL 23.11).

Replace the Finisher PWB (PL 23.16).

Execute dC330 [012-263], Stacker Encoder Sensor. Manually rotate the Encoder (PL 23.7) to block and unblock the sensor. **The display changes.**

Y N

Check the wire between J8875 pin 2 and P/J8988 pin 23 for an open or short circuit, or a loose or damaged connector. **The wire is OK.**

Y N

Repair/reconnect as required.

Measure the voltage between P/J8988, pins 22 and 24 on the Finisher PWB (BSD 12.24 Office Finisher LX Stacker Tray Control). **The voltage is approx. +5VDC.**

Y N

Replace the Finisher PWB (PL 23.16).

Measure the voltage between P/J8988, pin 3 on the Finisher PWB and GND (BSD 12.24 Office Finisher LX Stacker Tray Control). Manually rotate the Encoder (PL 23.7) to block and unblock the Stacker Encoder Sensor. **The voltage changes.**

Y N

Replace the Stacker Encoder Sensor (PL 23.7).

Replace the Finisher PWB (PL 23.16).

Execute dC330 [012-262], Stacker No Paper Sensor. Block and unblock the Sensor (PL 23.7). **The display changes.**

Y N

Check the wire between J8872 pin 2 and P/J8988 pin 14 for an open or short circuit, or a loose or damaged connector. **The wire is OK.**

Y N

Repair/reconnect as required.

Measure the voltage between P/J8988, pins 13 and 15 on the Finisher PWB (BSD 12.24 Office Finisher LX Stacker Tray Control). **The voltage is approx. +5VDC.**

Y N

Replace the Finisher PWB (PL 23.16).

Measure the voltage between P/J8988, pin 14 on the Finisher PWB and GND (BSD 12.24 Office Finisher LX Stacker Tray Control).Actuate the Stacker No Paper Sensor. **The voltage changes.**

Y N

Replace the Stacker No Paper Sensor (PL 23.7).

Replace the Finisher PWB (PL 23.16).

Replace the Finisher PWB (PL 23.16).

312-213 (LX) Stacker Tray Lower Limit Fault

BSD-ON:BSD 12.24 Office Finisher LX Stacker Tray Control

Stacker descended lower than normal levels, below low limit height.

Initial Actions

- Check for obstructions under the tray.
- Check the operation of the Stacker Height Sensor actuators.
- Check the tray raise/lower mechanism for damage or contamination.

Procedure

Execute dC330 [012-264], Stacker Height Sensor 1. Actuate the Stacker Height Sensor 1. **The display changes.**

Y N

Check the wire between J8873 pin 2 and P/J8988 pin 17 for an open or short circuit, or a loose or damaged connector. **The wire is OK.**

Y N

Repair/reconnect as required.

Measure the voltage between P/J8988, pins 16 and 18 on the Finisher PWB (BSD 12.24 Office Finisher LX Stacker Tray Control). **The voltage is approx. +5VDC.**

Y N

Replace the Finisher PWB (PL 23.16).

Measure the voltage between P/J8988, pin 17 on the Finisher PWB and GND (BSD 12.24 Office Finisher LX Stacker Tray Control). Actuate the Stacker Height Sensor 1. **The voltage changes.**

Y N

Replace the Stacker Height Sensor 1 (PL 23.11).

Replace the Finisher PWB (PL 23.16).

Execute dC330 [012-265], Stacker Height Sensor 2. Block and unblock the Stacker Height Sensor 2. **The display changes.**

Y N

Check the wire between J8874 pin 2 and P/J8988 pin 20 for an open or short circuit, or a loose or damaged connector. **The wire is OK.**

Y N

Repair/reconnect as required.

Measure the voltage between P/J8988, pins 19 and 21 on the Finisher PWB (BSD 12.24 Office Finisher LX Stacker Tray Control). **The voltage is approx. +5VDC.**

Y N

Replace the Finisher PWB (PL 23.16).

Measure the voltage between P/J8988, pin 20 on the Finisher PWB and GND (BSD 12.24 Office Finisher LX Stacker Tray Control).Actuate the Stacker Height Sensor 1. **The voltage changes.**

Y N

Replace the Stacker Height Sensor 2 (PL 23.11).

A B

A B

Replace the Finisher PWB (PL 23.16).

Execute dC330 [012-263], Stacker Encoder Sensor. Manually rotate the Encoder (PL 23.7) to block and unblock the sensor. **The display changes.**

Y N

Check the wire between J8875 pin 2 and P/J8988 pin 23 for an open or short circuit, or a loose or damaged connector. **The wire is OK.**

Y N

Repair/reconnect as required.

Measure the voltage between P/J8988, pins 22 and 24 on the Finisher PWB (BSD 12.24 Office Finisher LX Stacker Tray Control). **The voltage is approx. +5VDC.**

Y N

Replace the Finisher PWB (PL 23.16).

Measure the voltage between P/J8988, pin 23 on the Finisher PWB and GND (BSD 12.24 Office Finisher LX Stacker Tray Control). Manually rotate the Encoder (PL 23.7) to block and unblock the Stacker Encoder Sensor. **The voltage changes.**

Y N

Replace the Stacker Encoder Sensor (PL 23.7).

Replace the Finisher PWB (PL 23.16).

Execute dC330 [012-262], Stacker No Paper Sensor. Block and unblock the Sensor (PL 23.7). **The display changes.**

Y N

Check the wire between J8872 pin 2 and P/J8988 pin 14 for an open or short circuit, or a loose or damaged connector. **The wire is OK.**

Y N

Repair/reconnect as required.

Measure the voltage between P/J8988, pins 13 and 15 on the Finisher PWB (BSD 12.24 Office Finisher LX Stacker Tray Control). **The voltage is approx. +5VDC.**

Y N

Replace the Finisher PWB (PL 23.16).

Measure the voltage between P/J8988, pin 14 on the Finisher PWB and GND (BSD 12.24 Office Finisher LX Stacker Tray Control).Actuate the Stacker No Paper Sensor. **The voltage changes.**

Y N

Replace the Stacker No Paper Sensor (PL 23.7).

Replace the Finisher PWB (PL 23.16).

Replace the Finisher PWB (PL 23.16).

312-221 (LX) Front Tamper Home Sensor On Fault

BSD-ON:BSD 12.18 Office Finisher LX Tamping and offset (1 of 2)

BSD-ON:BSD 12.19 Office Finisher LX Tamping and Offset (2 of 2)

After the Front Tamper started moving to the home position, the Front Tamper Home Sensor did not turn On within 800ms.

Procedure

Manually operate the Tamper mechanism. **The Tamper mechanism moves smoothly.**

Y N

Replace the parts that are interfering with operation.

Execute dC330 [012-220], Front Tamper Home Sensor. Manually operate the Tamper mechanism to block and unblock the sensor. **The display changes.**

Y N

Check the wire between J8881 pin 2 and J8984 pin 5 for an open or short circuit, or a loose or damaged connector. **The wire is OK.**

Y N

Repair/reconnect as required.

Measure the voltage between J8984, pins 6 and 4 on the Finisher PWB (BSD 12.19 Office Finisher LX Tamping and Offset (2 of 2)). **The voltage is approx. +5VDC.**

Y N

Replace the Finisher PWB (PL 23.16).

Measure the voltage between J8984, pin 5 on the Finisher PWB and GND (BSD 12.19 Office Finisher LX Tamping and Offset (2 of 2)).Manually operate the Tamper mechanism to block and unblock the Front Tamper Home Sensor. **The voltage changes.**

Y N

Replace the Front Tamper Home Sensor (PL 23.12).

Replace the Finisher PWB (PL 23.16).

Alternately execute dC330 [012-020], Front Tamper Motor Front and [012-023], Front Tamper Motor Rear. **The Front Tamper Motor moves.**

Y N

There is +24 VDC from J8984 pin 19 on the Finisher PWB to GND

Y N

There is +24 VDC from J8982 pin 4 on the Finisher PWB to GND

Y N

Go to BSD 12.12 Office Finisher LX Interlock Switching and check the +24V circuit feeding pin 4. Repair/reconnect as required.

Replace the Finisher PWB (PL 23.16).

Check the wires between J8984, pins 18 ~ 22 on the Finisher PWB, and the Front Tamper Motor J8984 for an open or short circuit, or a loose or damaged connector. **The wires are OK.**

Y N

Repair/reconnect as required.

A B

A B

Replace the front Tamper Motor (PL 23.12). If the problem persists, replace the Finisher PWB (PL 23.16).

Replace the Finisher PWB (PL 23.16).

312-223 (LX) Front Tamper Home Sensor Off Fault

BSD-ON: BSD 12.18 Office Finisher LX Tamping and offset (1 of 2)

BSD-ON: BSD 12.19 Office Finisher LX Tamping and Offset (2 of 2)

After the Front Tamper started moving away from the home position, the Front Tamper Home Sensor did not turn Off within the specified time.

Procedure

Manually operate the Tamper mechanism. **The Tamper mechanism moves smoothly.**

Y N

Replace the parts that are interfering with operation.

Execute dC330 [012-220], Front Tamper Home Sensor. Manually operate the Tamper mechanism to block and unblock the sensor. **The display changes.**

Y N

Check the wire between J8881 pin 2 and J8984 pin 5 for an open or short circuit, or a loose or damaged connector. **The wire is OK.**

Y N

Repair/reconnect as required.

Measure the voltage between J8984, pins 6 and 4 on the Finisher PWB (BSD 12.18 Office Finisher LX Tamping and offset (1 of 2)). **The voltage is approx. +5VDC.**

Y N

Replace the Finisher PWB (PL 23.16).

Measure the voltage between J8984, pin 5 on the Finisher PWB and GND (BSD 12.18 Office Finisher LX Tamping and Offset (1 of 2). Manually operate the Tamper mechanism to block and unblock the Front Tamper Home Sensor. **The voltage changes.**

Y N

Replace the Front Tamper Home Sensor (PL 23.12).

Replace the Finisher PWB (PL 23.16).

Alternately execute dC330 [012-020], Front Tamper Motor Front and [012-023], Front Tamper Motor Rear. **The Front Tamper Motor moves.**

Y N

There is +24 VDC from J8984 pin 19 on the Finisher PWB to GND

Y N

There is +24 VDC from J8984 pin 4 on the Finisher PWB to GND

Y N

Go toBSD 12.12 Office Finisher LX Interlock Switching and check the +24V circuit feeding pin 4. Repair/reconnect as required.

Replace the Finisher PWB (PL 23.16).

Check the wires between J8984, pins 18 ~ 22 on the Finisher PWB, and the Front Tamper Motor J8984 for an open or short circuit, or a loose or damaged connector. **The wires are OK.**

Y N

Repair/reconnect as required.

A B

A B

Replace the Front Tamper Motor (PL 23.12). If the problem persists, replace the Finisher PWB (PL 23.16).

Replace the Finisher PWB (PL 23.16).

312-224 (LX) Rear Tamper Home Sensor Off Fault

BSD-ON: BSD 12.18 Office Finisher LX Tamping and offset (1 of 2)

BSD-ON: BSD 12.19 Office Finisher LX Tamping and Offset (2 of 2)

After the Rear Tamper started moving away from the home position, the Rear Tamper Home Sensor did not turn Off within the specified time.

Procedure

Manually operate the Tamper mechanism. **The Tamper mechanism moves smoothly.**

Y N

Replace the parts that are interfering with operation.

Execute dC330 [012-221], Rear Tamper Home Sensor. Manually operate the Tamper mechanism to block and unblock the sensor. **The display changes.**

Y N

Check the wire between J8882 pin 2 and J8984 pin 8 for an open or short circuit, or a loose or damaged connector. **The wire is OK.**

Y N

Repair/reconnect as required.

Measure the voltage between J8984, pins 9 and 7 on the Finisher PWB (BSD 12.19 Office Finisher LX Tamping and Offset (2 of 2)). **The voltage is approx. +5VDC.**

Y N

Replace the Finisher PWB (PL 23.16).

Measure the voltage between J8984, pin 8 on the Finisher PWB and GND (BSD 12.19 Office Finisher LX Tamping and Offset (2 of 2)).Manually operate the Tamper mechanism to block and unblock the Rear Tamper Home Sensor. **The voltage changes.**

Y N

Replace the Rear Tamper Home Sensor (PL 23.12).

Replace the Finisher PWB (PL 23.16).

Alternately execute dC330 [012-026], Rear Tamper Motor Front and [012-029], Rear Tamper Motor Rear. **The Rear Tamper Motor moves.**

Y N

There is +24 VDC from J8984 pin 19 on the Finisher PWB to GND

Y N

There is +24 VDC from J8982 pin 4 on the Finisher PWB to GND

Y N

Go to BSD 12.12 Office Finisher LX Interlock Switching and check the +24V circuit feeding pin 4. Repair/reconnect as required.

Replace the Finisher PWB (PL 23.16).

Check the wires between J8984, pins 13 ~ 17 on the Finisher PWB, and the Rear Tamper Motor P/J8883 for an open or short circuit, or a loose or damaged connector.

The wires are OK.

Y N

Repair/reconnect as required.

A B

A B

Replace the Rear Tamper Motor (PL 23.12). If the problem persists, replace the Finisher PWB (PL 23.16).

Replace the Finisher PWB (PL 23.16).

312-243 (LX) Booklet Folder Home Sensor On Fault

BSD-ON:BSD 12.17 Office Finisher LX Folding

Folder Home Sensor is not turned on after the lapse of 500ms from Motor ON while Folder Knife is returning to Home.

Initial Actions

- The Folder Home Sensor for improper installation
- The Folder Home Sensor connectors for connection failure
- The Folder Knife Motor connectors for connection failure
- The Knife drive mechanism for a foreign substance

Procedure

Enter dC330 [013-022], Folder Knife Motor FWD and [013-023], Folder Knife Motor REV alternately. Select Start. **The Fold Knife Motor energizes.**

Y N

Select Stop. Refer to (BSD 12.17 Office Finisher LX Folding). Check continuity between the Booklet Folder Knife Motor (P/J8905) and the Finisher PWB (P8985), and between the Booklet PWB (P/J8994) and the Finisher PWB (P8985). **The continuity check is OK.**

Y N

Repair the open circuit or short circuit.

Replace the Booklet Folder Knife Motor (PL 23.15). If the problem continues, replace the Booklet PWB (PL 23.21).

Select Stop. Enter dC330 [13-101], Folder Home Sensor. Select Start. Block/unblock the Folder Home Sensor. **The display changed.**

Y N

Check the wire between J8904 pin 2 and P/J8990 pin 2 on the FInisher PWB for an open or short circuit, or a loose or damaged connector. **The wire is OK.**

Y N

Repair/reconnect as required.

Measure the voltage between P/J8990, pins 3 and 1 on the Finisher PWB (BSD 12.17 Office Finisher LX Folding). **The voltage is approx. +5VDC.**

Y N

Replace the Finisher PWB (PL 23.16).

Measure the voltage between P/J8990, pin 2 on the Finisher PWB and GND (BSD 12.17 Office Finisher LX Folding Block/unblock the Folder Home Sensor. **The voltage changes.**

Y N

Replace the Folder Home Sensor (PL 23.15).

Replace the Finisher PWB (PL 23.16).

If the problem continues, replace the Finisher PWB (PL 23.16).

312-249 (LX) Booklet Front Stapler Fault

BSD-ON:BSD 12.26 Office Finisher LX Booklet Staple Control (1 of 2 - Front)

BSD-ON:BSD 12.13 Office Finisher LX Booklet Interlock Switching

The Booklet Front Staple Home Switch is not ON (does not return to home position) within the specified time after the Booklet Front Staple Motor starts to reverse.

Initial Actions

Check the Booklet Front Stapler for jammed staples or an incorrectly installed staple cartridge.

Procedure

Enter dC330 [12-024], Staple Motor FWD. and then [12-025], Staple Motor REV. **The Front Booklet Stapler cycles normally.**

Y N

There is +24 VDC from P/J8993 pin 5 on the Booklet PWB to GND.

Y N

Check the circuit from the Booklet PWB to the Booklet Stapler Cover Switch (BSD 12.13 Office Finisher LX Booklet Interlock Switching). Repair/replace as required (PL 23.21).

Switch off the power. Check the wires between P/J8994 on the Booklet PWB and J8894 on the Front Booklet Stapler (BSD 12.26 Office Finisher LX Booklet Staple Control (1 of 2 - Front)) for a loose or damaged connector, or an open or short circuit. If the wires are OK, replace the Front Booklet Stapler Assembly (PL 23.19). If the problem remains, replace the Booklet PWB (PL 23.21).

Switch off the power. Check the wire between P/J8995, pin 5 on the Booklet PWB and P/J8994 pin 3 on the Front Booklet Stapler (BSD 12.26 Office Finisher LX Booklet Staple Control (1 of 2 - Front)) for a loose or damaged connector, or an open or short circuit. If the wires are OK, replace the Front Booklet Stapler Assembly (PL 23.19). If the problem remains, replace the Booklet PWB (PL 23.21).

312-260 (LX) Eject Clamp Home Sensor On Fault

BSD-ON:BSD 12.22 Office Finisher LX Eject Control (1 of 2)

After the Eject Clamp started ascending, the Eject Clamp Home Sensor did not turn On within 500ms.

Initial Actions

- Manually operate the Eject mechanism. Check for binding, a dirty sensor, or damage.
- Check the actuator for the Eject Clamp Home Sensor b for damage

Procedure

Execute dC330 [012-250], Eject Clamp Home Sensor. Block and unblock the Eject Clamp Home Sensor **The display changes.**

Y N

Check the wire between J8870 pin 2 on the Eject Clamp Home Sensor and P/J8988 pin 8 on the Finisher PWB for an open or short circuit, or loose or damaged connectors. **The wire is OK.**

Y N

Repair/replace as required.

Measure the voltage between P/J8988, pins 9 and 7 on the Finisher PWB. **The voltage is approx. +5VDC.**

Y N

Replace the Finisher PWB (PL 23.16).

Measure the voltage between P/J8988 pin 8 on the Finisher PWB and GND. Actuate the Eject Clamp Home Sensor. **The voltage changes.**

Y N

Replace the Eject Clamp Home Sensor (PL 23.11).

Replace the Finisher PWB (PL 23.16).

Alternately execute dC330 [012-052], Eject Clamp Up and [012-053], Eject Clamp Down. **The Eject Motor (PL 22.9) starts up.**

Y N

Check the wires between P/J8878 pins 1~6 on the Eject Motor and P/J8983 pins 5~8 on the Finisher PWB for an open or short circuit, or loose or damaged connectors (BSD 12.22 Office Finisher LX Eject Control (1 of 2)). **The wires are OK.**

Y N

Repair/replace as required.

Measure the resistance of the Eject Motor between each pin of P/J8878-1/3/4/6. **The resistance is approx. 2Ohm.**

Y N

Replace the Eject Motor (PL 23.11).

Replace the Finisher PWB (PL 23.16). If the problem remains, replace the Eject Motor (PL 23.11)

A

A

Go to BSD 12.22 Office Finisher LX Eject Control (1 of 2). Check for an intermittent circuit or intermittent mechanical problem. If the check is OK, replace the Finisher PWB (PL 23.16).

312-263 (LX) Rear Tamper Fault

BSD-ON: BSD 12.18 Office Finisher LX Tamping and offset (1 of 2)

BSD-ON: BSD 12.19 Office Finisher LX Tamping and Offset (2 of 2)

After the Rear Tamper started moving to the home position, the Rear Tamper Home Sensor did not turn On within 800ms.

Procedure

Manually operate the Tamper mechanism. **The Tamper mechanism moves smoothly.**

Y N

Replace the parts that are interfering with operation.

Execute dC330 [012-221], Rear Tamper Home Sensor. Manually operate the Tamper mechanism to block and unblock the sensor. **The display changes.**

Y N

Check the wire between J8882 pin 2 and J8984 pin 8 for an open or short circuit, or a loose or damaged connector. **The wire is OK.**

Y N

Repair/reconnect as required.

Measure the voltage between J8984, pins 9 and 7 on the Finisher PWB (BSD 12.19 Office Finisher LX Tamping and Offset (2 of 2)). **The voltage is approx. +5VDC.**

Y N

Replace the Finisher PWB (PL 23.16).

Measure the voltage between J8984, pin 8 on the Finisher PWB and GND (BSD 12.19 Office Finisher LX Tamping and Offset (2 of 2) .Manually operate the Tamper mechanism to block and unblock the Rear Tamper Home Sensor. **The voltage changes.**

Y N

Replace the Rear Tamper Home Sensor (PL 23.12).

Replace the Finisher PWB (PL 23.16).

Alternately execute dC330 [012-026], Rear Tamper Motor Front and [012-029], Rear Tamper Motor Rear. **The Rear Tamper Motor moves.**

Y N

There is +24 VDC from J8984 pin 19 on the Finisher PWB to GND

Y N

There is +24 VDC from J8982 pin 4 on the Finisher PWB to GND

Y N

Go to BSD 12.12 Office Finisher LX Interlock Switching: and check the +24V circuit feeding pin 4. Repair/reconnect as required.

Replace the Finisher PWB (PL 23.16).

Check the wires between J8984, pins 13 ~ 17 on the Finisher PWB, and the Rear Tamper Motor P/J8883 for an open or short circuit, or a loose or damaged connector.

The wires are OK.

Y N

Repair/reconnect as required.

A B

A B

Replace the Rear Tamper Motor (PL 23.12). If the problem persists, replace the Finisher PWB (PL 23.16).

Replace the Finisher PWB (PL 23.16).

312-265 (LX) Booklet Folder Home Sensor OFF Fault

BSD-ON:BSD 12.17 Office Finisher LX Folding

When the Booklet Home moves from Home position, the Folder Home Sensor did not turn OFF within the specified time.

Initial Actions

- The Folder Home Sensor for improper installation
- The Folder Home Sensor connectors for connection failure
- The Booklet Fold Knife Motor connectors for connection failure
- The Knife drive mechanism for a foreign substance

Procedure

Enter dC330 [013-022], Folder Knife Motor FWD and [013-023], Folder Knife Motor REV alternately. Select Start. **The Fold Knife Motor energizes.**

Y N

Select Stop. Refer to BSD 12.17 Office Finisher LX Folding. Check continuity between the Folder Knife Motor (P/J8905) and the Finisher PWB (P8985), and between the Booklet PWB (P/J8994) and the Finisher PWB (P8985). **The continuity check is OK.**

Y N

Repair the open circuit or short circuit.

Replace the Folder Knife Motor (PL 23.15). If the problem continues, replace the Booklet PWB (PL 23.21).

Select Stop. Enter dC330 [13-101], Folder Home Sensor. Select Start. Block/unblock the Folder Home Sensor. **The display changed.**

Y N

Check the wire between J8904 pin 2 and P/J8990 pin 2 on the FInisher PWB for an open or short circuit, or a loose or damaged connector. **The wire is OK.**

Y N

Repair/reconnect as required.

Measure the voltage between P/J8990, pins 3 and 1 on the Finisher PWB BSD 12.17 Office Finisher LX Folding. **The voltage is approx. +5VDC.**

Y N

Replace the Finisher PWB (PL 23.16).

Measure the voltage between P/J8990, pin 2 on the Finisher PWB and GND (BSD 12.17 Office Finisher LX Folding).Block/unblock the Folder Home Sensor. **The voltage changes.**

Y N

Replace the Folder Home Sensor (PL 23.15).

Replace the Finisher PWB (PL 23.16).

If the problem continues, replace the Finisher PWB (PL 23.16).

312-268 (LX) Booklet Rear Stapler Fault

BSD-ON:BSD 12.27 Office Finisher LX Booklet Staple Control (2 of 2 -Rear)

BSD-ON:BSD 12.13 Office Finisher LX Booklet Interlock Switching

The Booklet Rear Staple Home Switch is not ON (does not return to home position) within the specified time after the Booklet Rear Staple Motor starts to reverse.

Initial Actions

Check the Booklet Rear Stapler for jammed staples or an incorrectly installed staple cartridge.

Procedure

Enter dC330 [12-026], Staple Motor FWD. and then [12-027], Staple Motor REV. **The Rear Booklet Stapler cycles normally.**

Y N

There is +24 VDC from P/J8993 pin 5 on the Booklet PWB to GND.

Y N

Check the circuit from the Booklet PWB to the Booklet Stapler Cover Switch BSD 12.13 Office Finisher LX Booklet Interlock Switching). Repair/replace as required (PL 23.21).

Switch off the power. Check the wires between P/J8995 on the Booklet PWB and J8895 on the Rear Booklet Stapler (BSD 12.27 Office Finisher LX Booklet Staple Control (2 of 2 -Rear)) for a loose or damaged connector, or an open or short circuit. If the wires are OK, replace the Rear Booklet Stapler Assembly (PL 23.20). If the problem remains, replace the Booklet PWB (PL 23.21).

Switch off the power. Check the wire between P/J8995, pin 12 on the Booklet PWB and J8895 pin 3 on the Rear Booklet Stapler (BSD 12.27 Office Finisher LX Booklet Staple Control (2 of 2 -Rear)) for a loose or damaged connector, or an open or short circuit. If the wires are OK, replace the Rear Booklet Stapler Assembly (PL 23.20). If the problem remains, replace the Booklet PWB (PL 23.21).

312-269 (LX) Booklet Sub-CPU Communications Fault

BSD-ON:BSD 12.9 Office Finisher LX Communication (IOT-Finisher)

Communications between the Finisher PWB and the Booklet PWB Failed

Initial Actions

- Check the connectors at the Finisher PWB and the Booklet PWB are connected or seated properly
- Check the wiring between the Finisher PWB and the Booklet PWB for damage

Procedure

Power off and power on the printer. **The problem is resolved.**

Y N

Reload the software. **The problem is resolved.**

Y N

Replace the Finisher PWB (PL 23.16). If the problem continues, replace the Booklet PWB (PL 23.21).

Rerun the job.

Rerun the job.

312-282 (LX) Eject Clamp Home Sensor Off Fault

BSD-ON:BSD 12.22 Office Finisher LX Eject Control (1 of 2)

After the Eject Clamp started descending, the Eject Clamp Home Sensor did not turn Off within 200ms.

Initial Actions

- Manually operate the Eject mechanism. Check for binding, a dirty sensor, or damage.
- Check the actuator for the Eject Clamp Home Sensor for damage
- Check the return Spring (PL 23.11) item 38 and replace if damaged or missing.

Procedure

Execute dC330 [012-250], Eject Clamp Home Sensor. Block and unblock the Eject Clamp Home Sensor **The display changes.**

Y N

Check the wire between J8870 pin 2 on the Eject Clamp Home Sensor and P/J8988 pin 8 on the Finisher PWB for an open or short circuit, or loose or damaged connectors. **The wire is OK.**

Y N

Repair/replace as required.

Measure the voltage between P/J8988, pins 9 and 7 on the Finisher PWB. **The voltage is approx. +5VDC.**

Y N

Replace the Finisher PWB (PL 23.16).

Measure the voltage between P/J8988 pin 8 on the Finisher PWB and GND. Actuate the Eject Clamp Home Sensor. **The voltage changes.**

Y N

Replace the Eject Clamp Home Sensor (PL 23.11).

Replace the Finisher PWB (PL 23.16).

Alternately execute dC330 [012-052], Eject Clamp Up and [012-053], Eject Clamp Down. **The Eject Motor starts.**

Y N

Check the wires between P/J8878 pins 1~6 on the Eject Motor and P/J8983 pins 5~8 on the Finisher PWB for an open or short circuit, or loose or damaged connectors BSD 12.22 Office Finisher LX Eject Control (1 of 2)). **The wires are OK.**

Y N

Repair/replace as required.

Measure the resistance of the Eject Motor between each pin of P/J8878-1/3/4/6. **The resistance is approx. 2Ohm.**

Y N

Replace the Eject Motor (PL 23.11).

Replace the Finisher PWB (PL 23.16). If the problem remains, replace the Eject Motor (PL 23.11)

A

A

Go to BSD 12.22 Office Finisher LX Eject Control (1 of 2). Check for an intermittent circuit or intermittent mechanical problem. If the check is OK, replace the Finisher PWB (PL 23.16).

312-283 (LX) Set Clamp Home Sensor On Fault

BSD-ON:BSD 12.22 Office Finisher LX Eject Control (1 of 2)

BSD-ON: BSD 12.23 Office Finisher LX Eject Control (2 of 2)

After the Set Clamp started, the Set Clamp Home Sensor did not turn On within 200ms.

Initial Actions

- Manually operate the Eject mechanism. Check for binding, a dirty sensor, or damage.
- Check the actuator for the Set Clamp Home Sensor for damage
- Check the return Spring (PL 23.11) item 38 and replace if damaged or missing.
- Make sure there is good meshing between Gear (PL 23.11) item 10 and the Set Clamp Clutch, item 12.
- Remove the Gear Select Actuator (PL 23.11) item 21 and check the drive dogs for damage.

Procedure

Execute dC330 [012-251], Set Clamp Home Sensor. Actuate the Set Clamp Home Sensor. **The display changes.**

Y N

Check the wire between J8871 pin 2 on the Set Clamp Home Sensor and P/J8988 pin 11 on the Finisher PWB for an open or short circuit, or loose or damaged connectors. **The wire is OK.**

Y N

Repair/replace as required.

Measure the voltage between P/J8988, pins 12 and 10 on the Finisher PWB. **The voltage is approx. +5VDC.**

Y N

Replace the Finisher PWB (PL 23.16).

Measure the voltage between the P/J8988 pin 11 on the Finisher PWB and GND).Actuate the Eject Clamp Home Sensor. **The voltage changes.**

Y N

Replace the Eject Clamp Home Sensor (PL 23.11).

Replace the Finisher PWB (PL 23.16).

Alternately execute dC330 [012-052], Eject Clamp Up and [012-053], Eject Clamp Down. **The Eject Motor starts.**

Y N

Check the wires between P/J8878 pins 1~6 on the Eject Motor and P/J8983 pins 5~8 on the Finisher PWB for an open or short circuit, or loose or damaged connectors (BSD 12.22 Office Finisher LX Eject Control (1 of 2)). **The wires are OK.**

Y N

Repair/replace as required.

Measure the resistance of the Eject Motor between each pin of P/J8878-1/3/4/6. **The resistance is approx. 2 Ohm.**

A

Y N

Replace the Eject Motor (PL 23.11).

Replace the Finisher PWB (PL 23.16). If the problem remains, replace the Eject Motor (PL 23.11)

Execute dC330 [012-050 Set Clamp Clutch ON]. **The Set Clamp Clutch energizes.**

Y N

Select Stop. Check the wires between P/J8877 pins 1 and 2 on the Set Clamp Clutch and P/J8983 pins 3 and 4 on the Finisher PWB for an open or short circuit, or loose or damaged connectors (BSD 12.23 Office Finisher LX Eject Control (2 of 2)). **The wires are OK.**

Y N

Repair/replace as required.

Measure the voltage between the Finisher PWB P8983-4 (+) and GND (-). **The voltage is approx. +24VDC.**

Y N

Replace the Set Clamp Clutch (PL 23.11). If the problem persists, replace the Finisher PWB (PL 23.16).

Replace the Finisher PWB (PL 23.16).

Replace the Finisher PWB (PL 23.16).

A

312-284 (LX) Set Clamp Home Sensor Off Fault

BSD-ON:BSD 12.22 Office Finisher LX Eject Control (1 of 2)

BSD-ON:BSD 12.23 Office Finisher LX Eject Control (2 of 2)

After the Set Clamp completed operation, the Set Clamp Home Sensor did not turn Off within the specified time.

Initial Actions

- Manually operate the Eject mechanism. Check for binding, a dirty sensor, or damage.
- Check the actuator for the Set Clamp Home Sensor for damage
- Check the return Spring (PL 23.11) item 38 and replace if damaged or missing.
- Make sure there is good meshing between Gear (PL 23.11) item 10 and the Set Clamp Clutch item 12.
- Remove the Gear Select Actuator (PL 23.11) item 21 and check the drive dogs for damage.

Procedure

Execute dC330 [012-251], Set Clamp Home Sensor. Actuate the Set Clamp Home Sensor. **The display changes.**

Y N

Check the wire between J8881 pin 2 on the Set Clamp Home Sensor and P/J8988 pin 11 on the Finisher PWB for an open or short circuit, or loose or damaged connectors. **The wire is OK.**

Y N

Repair/replace as required.

Measure the voltage between P/J8988, pins 12 and 10 on the Finisher PWB. **The voltage is approx. +5VDC.**

Y N

Replace the Finisher PWB (PL 23.16).

Measure the voltage between the pin 11 on the Finisher PWB and GND).Actuate the Eject Clamp Home Sensor. **The voltage changes.**

Y N

Replace the Eject Clamp Home Sensor (PL 23.11).

Replace the Finisher PWB (PL 23.16).

Alternately execute dC330 [012-052], Eject Clamp Up and [012-053], Eject Clamp Down. **The Eject Motor starts.**

Y N

Check the wires between P/J8878 pins 1~6 on the Eject Motor and P/J8983 pins 5~8 on the Finisher PWB for an open or short circuit, or loose or damaged connectors (BSD 12.22 Office Finisher LX Eject Control (1 of 2)). **The wires are OK.**

Y N

Repair/replace as required.

A B

Measure the resistance of the Eject Motor between each pin of P/J8878-1/3/4/6. **The resistance is approx. 2Ohm.**

Y N

Replace the Eject Motor (PL 23.11).

Replace the Finisher PWB (PL 23.16). If the problem remains, replace the Eject Motor (PL 23.11)

Execute dC330 [012-050 Set Clamp Clutch ON]. **The Set Clamp Clutch energizes.**

Y N

Select Stop. Check the wires between P/J8877 pins 1 and 2 on the Set Clamp Clutch and P/J8983 pins 3 and 4 on the Finisher PWB for an open or short circuit, or loose or damaged connectors (BSD 12.23 Office Finisher LX Eject Control (2 of 2)). **The wires are OK.**

Y N

Repair/replace as required.

Measure the voltage between the Finisher PWB P8983-4 (+) and GND (-). **The voltage is approx. +24VDC.**

Y N

Replace the Set Clamp Clutch (PL 23.11). If the problem persists, replace the Finisher PWB (PL 23.16).

Replace the Finisher PWB (PL 23.16).

Replace the Finisher PWB (PL 23.16).

312-291 (LX) Stapler Fault

BSD-ON:BSD 12.21 Office Finisher LX Staple Control

- After the Stapler Motor turned On (Forward rotation), the Staple Head Home Sensor did not switch from Off to On within the specified time.
- After the Stapler Motor turned On (Reverse rotation), the Staple Head Home Sensor did not turn On within the specified time.

Initial Actions

Check the Stapler for jammed staples or an incorrectly installed staple cartridge.

Procedure

Execute dC330 [012-046], Staple Motor FWD, and [012-047], then Staple Motor REV. **The Stapler cycles.**

Y N

Check the wires between J8887, pins 1~4 on the Stapler Assembly and P/J8981 pins 9~11 on the Finisher PWB for an open or short circuit, or loose or damaged connectors. If the wires are OK, the Stapler Assembly (PL 23.8). If the problem continues, replace the Finisher PWB (PL 23.16).

Select Stop. Execute dC330 [012-244], Staple Home Switch. **The display is "Low."**

Y N

There is +5 VDC from pin 5 to pin 1 of J8886 on the Stapler Assembly.

Y N

Check the wires from P/J8981, pins 4 and 8, to J8886 pins 5 and 1 for an open circuit. If the wires are OK, replace the Finisher PWB (PL 23.16).

Check the wire from J8886 pin 4 to P/J8981 pin 5 for an open circuit. If the wire is OK, replace the Stapler Assembly (PL 23.8).

Go to BSD 12.21 Office Finisher LX Staple Control. Check for an intermittent connection. If the check is good, replace the Stapler Assembly (PL 23.8). If the problem continues, replace the Finisher PWB (PL 23.16).

312-295 (LX) Stapler Move Position Sensor On Fault

BSD-ON:BSD 12.20 Office Finisher LX Staple Positioning

- After the Stapler started moving to the staple position, the Stapler Move Position Sensor did not turn On within 2sec.
- After the Stapler completed moving to the Staple Position, the Stapler Move Position Sensor did not turn On.

Initial Actions

Check the Stapler, Base Frame, and Rail (PL 23.8) for freedom of movement.

Procedure

Execute dC330 [012-241], Stapler Move Position Sensor. Move the Stapler by hand from the Home position to the staple position and back. **The display changes.**

Y N

Check the wire between J8885 pin 2 on the Stapler Move Position Sensor and P/J8981 pin 2 on the Finisher PWB for an open or short circuit, or loose or damaged connectors. **The wire is OK.**

Y N

Repair/replace as required.

Measure the voltage between P/J8981, pins 3 and 1 on the Finisher PWB (BSD 12.20 Office Finisher LX Staple Positioning). **The voltage is approx. +5VDC.**

Y N

Replace the Finisher PWB (PL 23.16).

Measure the voltage between P/J8981 pin 2 on the Finisher PWB and GND (BSD 12.20 Office Finisher LX Staple Positioning). Move the Stapler by hand from the Home position to the staple position and back. **The voltage changes.**

Y N

Replace the Stapler Move Position Sensor (PL 23.8).

Replace the Finisher PWB (PL 23.16).

Alternately execute dC330 [012-43], Staple Move Motor Rear and [012-040], Staple Move Motor Front. **The Stapler Move Motor moves.**

Y N

Check the wires between P/J8981 pins 13~16 on the Finisher PWB and P/J8888 on the Stapler Move Motor (BSD 12.20 Office Finisher LX Staple Positioning) for an open or short circuit, or loose or damaged connectors. **The wires are OK.**

Y N

Repair/replace as required.

Replace the Staple Move Motor (PL 23.8). If the problem persists, replace the Finisher PWB (PL 23.16).

Go to (BSD 12.20 Office Finisher LX Staple Positioning). Check for an intermittent connection. If the check is good, replace the Stapler Assembly (PL 23.8). If the problem continues, replace the Finisher PWB (PL 23.16).

312-296 (LX) Staple Move Sensor Off Fault

BSD-ON:BSD 12.20 Office Finisher LX Staple Positioning

- After the Stapler started moving to the Staple Position and the Staple Move Sensor turned Off, the Staple Move Sensor did not turn Off within 500ms.
- After the Staple Position had been fixed, the Staple Move Sensor turned Off.
- After the Staple Move Sensor turned On when paper passed through the Dual Staple 1 Position while moving to the Rear Staple Position, the Staple Move Sensor did not turn Off within 500ms.

Initial Actions

Check the Stapler, Base Frame, and Rail (PL 23.8) for freedom of movement.

Check to see if the shipping screw was removed from the stapler.

Procedure

Execute dC330 [012-241], Stapler Move Position Sensor. Move the Stapler by hand from the Home position to the staple position and back. **The display changes.**

Y N

Check the wire between J8885 pin 2 on the Stapler Move Position Sensor and P/J8981 pin 2 on the Finisher PWB for an open or short circuit, or loose or damaged connectors. **The wire is OK.**

Y N

Repair/replace as required.

Measure the voltage between P/J8981, pins 3 and 1 on the Finisher PWB (BSD 12.20 Office Finisher LX Staple Positioning). **The voltage is approx. +5VDC.**

Y N

Replace the Finisher PWB (PL 23.16).

Measure the voltage between P/J8981 pin 2 on the Finisher PWB and GND (BSD 12.20 Office Finisher LX Staple Positioning). Move the Stapler by hand from the Home position to the staple position and back. **The voltage changes.**

Y N

Replace the Stapler Move Position Sensor (PL 23.8).

Replace the Finisher PWB (PL 23.16).

Alternately execute dC330 [012-43], Staple Move Motor Rear and [012-040], Staple Move Motor Front. **The Stapler Move Motor moves.**

Y N

Check the wires between P/J8981 pins 13~16 on the Finisher PWB and P/J8888 on the Stapler Move Motor (BSD 12.20 Office Finisher LX Staple Positioning) for an open or short circuit, or loose or damaged connectors. **The wires are OK.**

Y N

Repair/replace as required.

Replace the Staple Move Motor (PL 23.8). If the problem persists, replace the Finisher PWB (PL 23.16).

A

A

Go to BSD 12.20 Office Finisher LX Staple Positioning. Check for an intermittent connection. If the check is good, replace the Stapler Assembly (PL 23.8). If the problem continues, replace the Finisher PWB (PL 23.16).

312-300 (LX) Eject Cover Open

BSD-ON:BSD 12.12 Office Finisher LX Interlock Switching

Eject Cover Switch open was detected.

Initial Actions

- Ensure that the Eject Cover is down
- Check Eject Cover Switch for improper installation
- Check Eject Cover Switch connectors for connection failure
- Check Actuator part for deformation

Procedure

Enter dC330 [012-300], Eject Cover Switch (PL 23.11). Select Start. Actuate the Eject Cover Switch. **The display changes**

Y N

Select Stop. Check continuity of the Eject Cover Switch (J8889, pin 1 to pin 2). **The continuity check is OK.**

Y N

Replace the Eject Cover Switch (PL 23.11).

Check continuity between the Eject Cover Switch and the Finisher PWB (J8982 pin 1 to. J8889 pin 1, and J8889 pin2 to J8889 pin 7. If the check is OK, replace the Finisher PWB (PL 23.16).

Select Stop. If the problem continues, replace the Finisher PWB (PL 23.16).

312-302 (LX) Finisher Front Cover Open

BSD-ON:BSD 12.12 Office Finisher LX Interlock Switching

The Finisher Front Cover is open.

Initial Actions

- Check the installation of the H-Transport Open Sensor
- Opening/closing of the Finisher H-Transport Cover.

Procedure

Execute dC330 [012-302], Front Door Interlock Switch. Open/close the Finisher Front Cover. **The display changes.**

Y N

Open the Front Door and cheat the Front Door Interlock Switch **The display changes.**

Y N

Check the wires between J8982 pin 3 and J8891 pin 2B, and from J8891 pin 2A to J8982 pin 3 for an open or short circuit, or a loose or damaged connector. **The wires are OK.**

Y N

Repair/reconnect as required.

Remove the cheater. Measure the voltage between J8891 pin 2A on the Front Door Interlock Switch and GND (BSD 12.12 Office Finisher LX Interlock Switching). **The voltage is approx. +5VDC.**

Y N

Check the wire from J8891 pin 2A to J8982 pin 3 for an open or short circuit, or a loose or damaged connector. If the wires are OK, replace the Finisher PWB (PL 23.16).

Cheat the Interlock Switch. **The voltage drops to 0 VDC.**

Y N

Replace the Front Door Interlock Switch (PL 23.16).

Replace the Finisher PWB (PL 23.16).

Check the actuator for damage or misalignment

Check the Interlock circuit for an intermittent condition (BSD 12.12 Office Finisher LX Interlock Switching). If the problem continues, replace the Finisher PWB (PL 23.16).

312-303 (LX) Finisher H-Transport Cover Open

BSD-ON:BSD 12.14 Office Finisher LX Horizontal Transportation

The Finisher H-Transport Cover is open.

Initial Actions

- Check the installation of the H-Transport Open Sensor
- Opening/closing of the Finisher H-Transport Cover.

Procedure

Execute dC330 [012-303], H-Transport Open Sensor. Actuate the H-Transport Open Sensor (PL 23.4). **The display changes.**

Y N

Check the wire between J8860 pin 2 and J8987 pin 2 for an open or short circuit, or a loose or damaged connector. **The wire is OK.**

Y N

Repair/reconnect as required.

Measure the voltage between J8987, pins 3 and 1 on the Finisher PWB (BSD 12.14 Office Finisher LX Horizontal Transportation) **The voltage is approx. +5VDC.**

Y N

Replace the Finisher PWB (PL 23.16).

Measure the voltage between J8987, pin 2 on the Finisher PWB and GND (BSD 12.14 Office Finisher LX Horizontal Transportation).Actuate the H-Transport Open Sensor. **The voltage changes.**

Y N

Replace the H-Transport Open Sensor (PL 23.4).

Replace the Finisher PWB (PL 23.16).

If the problem continues, replace the Finisher PWB (PL 23.16).

312-320 (LX) Punch Home Sensor On Fault

BSD-ON: BSD 12.15 Office Finisher LX Punch

The Punch Home Sensor did not turn ON within the specified time after the Punch Motor started running.

Initial Actions

Check the following:

- Punch Home Actuator for deformation
- Punch Home Sensor for proper installation
- Punch Home Sensor connectors
- Punch Motor for proper operation
- Punch Motor connectors

Procedure

Enter dC330 [12-074] and [12-078], Punch Motor (PL 23.5), alternately.
Select Start. **The Punch Motor runs.**

Y N

Select Stop. Check circuit of the Punch Motor. Refer to BSD 12.15 Office Finisher LX Punch to troubleshoot the circuit.

Select Stop. Select [12-271], Punch Home Sensor (PL 23.5). Select Start. Actuate the sensor with a piece of paper. **The display changes.**

Y N

Go to BSD 12.15 Office Finisher LX Punch. Check circuit of the Punch Home Sensor.

Select Stop. If the problem continues, replace the Finisher PWB (PL 23.16).

312-334 (LX) Download Mode Fault

Failure in previous download (abnormal termination during download); can only start in Download Mode upon turning power on.

Procedure

Download defective; check the following:

- Cable connection between Finisher and IOT is not connected or defective
- Finisher power cable is plugged in properly

312-500 (LX) Download Fault

Detected error while writing to Finisher ROM.Proper operation not available since ROM may have been erased.

Procedure

Retry download. If the problem continues, replace the FInisher PWB (PL 23.16).

312-700 (LX) Punch Box Nearly Full

BSD-ON:BSD 12.15 Office Finisher LX Punch

Punch Box nearly full.

Procedure

Empty the Punch Box and re-insert. If the fault remains, check the circuit of the Punch Box Set Sensor (BSD 12.15 Office Finisher LX Punch).

312-901 (LX) H-Transport Entrance Sensor Static Jam

BSD-ON:BSD 12.14 Office Finisher LX Horizontal Transportation

Paper remains on the H-Transport Entrance Sensor.

Initial Actions

Check the paper path. If no paper is found continue with this RAP.

Clean the sensor.

Procedure

Execute dC330 [012-190], H-Transport Entrance Sensor. Actuate the H-Transport Entrance Sensor (PL 23.4). **The display changes.**

Y **N**

Check the wire between J8861 pin 2 and J8987 pin 6 for an open or short circuit, or a loose or damaged connector. **The wire is OK.**

Y **N**

Repair/reconnect as required.

Measure the voltage between J8987, pins 4 and 5 on the Finisher PWB (BSD 12.14 Office Finisher LX Horizontal Transportation). **The voltage is approx. +5VDC.**

Y **N**

Replace the Finisher PWB (PL 23.16).

Measure the voltage between J8987, pin 6 on the Finisher PWB and GND (BSD 12.14 Office Finisher LX Horizontal Transportation).Actuate the H-Transport Entrance Sensor. **The voltage changes.**

Y **N**

Replace the H-Transport Entrance Sensor (PL 23.4).

Replace the Finisher PWB (PL 23.16).

If the problem continues, replace the Finisher PWB (PL 23.16).

312-903 (LX) Paper Remains at Compiler Exit Sensor

BSD-ON:BSD 12.16 Office Finisher LX Transportation

Paper remains on the Compiler Exit Sensor.

Initial Actions

Check the paper path. If no paper is found continue with this RAP.

Clean the sensor.

Procedure

Execute dC330 [012-150], Compiler Exit Sensor. Actuate the Compiler Exit Sensor (PL 23.14). **The display changes.**

Y N

Check the wire between J8869 pin 2 and P/J8988 pin 5 for an open or short circuit, or a loose or damaged connector. **The wire is OK.**

Y N

Repair/reconnect as required.

Measure the voltage between P/J8988, pins 3 and 1 on the Finisher PWB (BSD 12.16 Office Finisher LX Transportation). **The voltage is approx. +5VDC.**

Y N

Replace the Finisher PWB (PL 23.16).

Measure the voltage between P/J8988, pin 5 on the Finisher PWB and GND (BSD 12.16 Office Finisher LX Transportation).Actuate the Compiler Exit Sensor. **The voltage changes.**

Y N

Replace the Compiler Exit Sensor (PL 23.14).

Replace the Finisher PWB (PL 23.16).

If the problem continues, replace the Finisher PWB (PL 23.16).

312-905 (LX) Compiler Tray No Paper Sensor Static JAM

BSD-ON: BSD 12.19 Office Finisher LX Tamping and Offset (2 of 2)

Paper remains on the Compiler Tray No Paper Sensor.

Initial Actions

Check the paper path. If no paper is found continue with this RAP.

Clean the sensor.

Procedure

Enter dC330 [012-151], Compiler Tray No Paper Sensor. Select **Start**. Actuate the Compiler Tray No Paper Sensor. **The display changes.**

Y N

Check the wire between J8880 pin 2 and J8984 pin 2 on the Finisher PWB for an open or short circuit, or a loose or damaged connector. **The wire is OK.**

Y N

Repair/reconnect as required.

Measure the voltage between J8984 pins 3 and 1 on the Finisher PWB (BSD 12.19 Office Finisher LX Tamping and Offset (2 of 2)). **The voltage is approx. +5VDC.**

Y N

Replace the Finisher PWB (PL 23.16).

Measure the voltage between J8984 pin 2 on the Finisher PWB and GND (BSD 12.19 Office Finisher LX Tamping and Offset (2 of 2) . Actuate the Compiler Tray No Paper Sensor. **The voltage changes.**

Y N

Replace the Compiler Tray No Paper Sensor (PL 23.12).

Replace the Finisher PWB (PL 23.16).

If the problem continues, replace the Finisher PWB (PL 23.16).

312-917 (LX) Stacker Tray Stapled Set Over Count

The Staple Set Count of the Stacker Tray has exceeded 50 sets during the Staple Set Eject operation.

Procedure

Remove all paper from the Stacker. If the problem continues, go to the 312-161 (LX) RAP.

312-923 (LX) H-Transport Entrance Sensor Static Jam

BSD-ON:BSD 12.14 Office Finisher LX Horizontal Transportation

During standby, paper was detected by the H-Transport Entrance Sensor.

Initial Actions

Check the paper path. If no paper is found continue with this RAP.

Clean the sensor.

Procedure

Execute dC330 [012-190], H-Transport Entrance Sensor. Actuate the H-Transport Entrance Sensor (PL 23.4). **The display changes.**

Y N

Check the wire between J8861 pin 2 and J8987 pin 6 for an open or short circuit, or a loose or damaged connector. **The wire is OK.**

Y N

Repair/reconnect as required.

Measure the voltage between J8987, pins 4 and 5 on the Finisher PWB (BSD 12.14 Office Finisher LX Horizontal Transportation). **The voltage is approx. +5VDC.**

Y N

Replace the Finisher PWB (PL 23.16).

Measure the voltage between J8987, pin 6 on the Finisher PWB and GND (BSD 12.14 Office Finisher LX Horizontal Transportation).Actuate the H-Transport Entrance Sensor. **The voltage changes.**

Y N

Replace the H-Transport Entrance Sensor (PL 23.4).

Replace the Finisher PWB (PL 23.16).

If the problem continues, replace the Finisher PWB (PL 23.16).

312-930 (LX) Stacker Tray Full RAP

The output paper stacked on the Finisher Stacker Tray reaches capacity (for mixed paper size).

Initial Actions

- Remove the paper from the Stacker Tray
- Power Off/On

If the fault remains, perform the Procedure

Procedure

Go to the 312-211 (LX) RAP.

312-935 (LX) Paper at Finisher Entrance Sensor

BSD-ON:BSD 12.16 Office Finisher LX Transportation

Control logic reports paper at the Finisher Entrance Sensor.

Initial Actions

- Check for obstructions in the paper path
- Check that the Finisher is docked correctly to ensure proper Transport Gate operation

Procedure

Enter dC330 [012-100], Finisher Entrance Sensor. Select **Start**. Actuate the Finisher Entrance Sensor. **The display changes.**

Y **N**

Check the wire between J8868 pin 2 and P/J8988 pin 2 for an open or short circuit, or a loose or damaged connector. **The wire is OK.**

Y **N**

Repair/reconnect as required.

Measure the voltage between P/J8988 pins 3 and 1 on the Finisher PWB (BSD 12.16 Office Finisher LX Transportation). **The voltage is approx. +5VDC.**

Y **N**

Replace the Finisher PWB (PL 23.16).

Measure the voltage between P/J8988 pin 2 on the Finisher PWB and GND (BSD 12.16 Office Finisher LX Transportation). Actuate the Finisher Entrance Sensor. **The voltage changes.**

Y **N**

Replace the Finisher Entrance Sensor (PL 23.14).

Replace the Finisher PWB (PL 23.16).

Replace the Finisher PWB (PL 23.16).

312-949 (LX) Punch Box Missing

BSD-ON: BSD 12.15 Office Finisher LX Punch

Punch Box Set Sensor detected Punch Box to be missing.

Initial Actions

- Ensure that the Punch Box is present and installed properly

Procedure

Enter dC330 [012-275], Punch Box Set Sensor (PL 23.5). Select **Start**. Remove and insert the Punch Box manually. **The display changes**

Y N

Select Stop. Check continuity between the Punch Box Set Sensor (J8866); P8863; and the Finisher PWB (J8987). **The continuity check is OK.**

Y N

Repair the open circuit or short circuit.

Replace the Punch Box Set Sensor (PL 23.5). If the problem continues, replace the Finisher PWB (PL 23.16).

Check the Punch Box Set Sensor Actuator and Punch Box Guide for deformation. **The Punch Box can be removed and inserted properly.**

Y N

Repair or replace the Punch Box (PL 23.2).

Select Stop. If the problem continues, replace the Finisher PWB (PL 23.16).

312-966 (LX) Scratch Sheet Compile

Paper was detected that was either out of spec, in poor condition (wrinkled, curled) and was ejected to the compiler.

NOTE: *This Code is an operation message. If this fail code is frequently declared, perform the procedure below.*

Initial Actions

- Check that the Top Cover can be opened and closed.
- Power Off/On.

Procedure

Check the specifications of paper. **The paper is in spec.**

Y N

Replace the paper with new paper that is in spec.

Check the condition of the paper. **The paper is in normal condition without any problem that causes the paper to be bent (dog eared) or jam.**

Y N

Resolve any problem that causes the paper to be bent or caught.

Check for a Fault Code. **Another Fault Code is displayed.**

Y N

If the problem continues, replace the Finisher PWB (PL 23.16).

Go to the appropriate Fault Code.

312-969 (LX) IOT Center Tray Full

The H-Transport Entrance Sensor is detected to be ON for 10 successive seconds.

Procedure

Go to the 312-126 (LX) RAP.

312-976 (LX) Staple Fail

Staple Head Home Sensor is not turned on within 450msec after Staple Head Close operation is started, and Staple Head Home Sensor is turned on after reverse operation is started.

Procedure

Go to the 312-291 (LX) RAP.

312-977 (LX) Staple Ready Fail

Staple Head void stapling reached a specified number of times during the Staple Head initialization.

Procedure

Check that staples are present and correctly installed. If the problem continues, go to the 312-291 (LX) RAP.

312-979 (LX) Stapler near empty

- Low Staple Sensor ON is detected during power ON and Interlock Close
- Low Staple Sensor ON is detected right before the Staple Head Close operation

Procedure

Check the Staple Cartridge. If the Staples are NOT low, go to the 312-291 (LX) RAP.

312-982 (LX) Stacker Lower Safety Warning

The Height Alignment was not successful within 250msec when the Height Adjustment was performed for output paper to the Stacker Tray (Tray lowering down) in the middle of a job.

Procedure

Remove all paper from the Stacker. If the problem continues, go to the 312-213 (LX) RAP.

313-210 (LX) Booklet Staple Move Home Sensor ON RAP

BSD-ON: BSD 12.25 Office Finisher LX Booklet Staple Positioning

Booklet Staple Move Home Sensor does not turn on within designated time period.

Initial Actions

- Ensure the Staple Head is free from obstructions
- Check for 013-306 or 013-307 Faults.

Procedure

Execute dC330 [013-143], Booklet Staple Move Home Sensor. Move the Booklet Stapler to block and unblock the sensor (PL 23.18). **The display changes.**

Y N

Check the wire between J8897 pin 2 and P/J8991 pin 2 for an open or short circuit, or a loose or damaged connector. **The wire is OK.**

Y N

Repair/reconnect as required.

Measure the voltage between P/J8991, pins 3 and 1 on the Booklet PWB (BSD 12.25 Office Finisher LX Booklet Staple Positioning). **The voltage is approx. +5VDC.**

Y N

Replace the Booklet PWB (PL 23.21).

Measure the voltage between P/J8991 pin 2 on the Booklet PWB and GND (BSD 12.25 Office Finisher LX Booklet Staple Positioning). Actuate the Booklet Staple Move Home Sensor. **The voltage changes.**

Y N

Replace the Booklet Staple Move Home Sensor (PL 23.18).

Replace the Booklet PWB (PL 23.21).

Alternately execute dC330 [013-028], Stapler Move Motor In and [013-029], Stapler Move Motor Out. **The Stapler Move Motor moves.**

Y N

Check the wires between P/J8992 pins 1~6 on the Booklet PWB and P/J8906 on the Booklet Stapler Move Motor (BSD 12.25 Office Finisher LX Booklet Staple Positioning) for an open or short circuit, or loose or damaged connectors. **The wires are OK.**

Y N

Repair/replace as required.

Monitor the voltage at P/J8994, pin 3 (BSD 12.25 Office Finisher LX Booklet Staple Positioning). Alternately execute dC330 [013-028], Stapler Move Motor In and [013-029], Stapler Move Motor Out. **An AC clock pulse is detected.**

Y N

Check the wire between P/J8994, pin 3 and P/J8995 pin 4. If the wire is OK, replace the Finisher PWB (PL 23.16).

Replace the Booklet Stapler Move Motor (PL 23.18). If the problem persists, replace the Booklet PWB (PL 23.21).

A

Go to BSD 12.25 Office Finisher LX Booklet Staple Positioning and check for an intermittent circuit.

313-211 (LX) Booklet Staple Move Home Sensor OFF

BSD-ON:BSD 12.25 Office Finisher LX Booklet Staple Positioning

Booklet Staple Move Home Sensor does not turn off within designated time period

Initial Actions

- Ensure the Staple Head is free from obstructions
- Check for 013-306 or 013-307 Faults.

Procedure

Execute dC330 [013-143], Booklet Staple Move Home Sensor. Move the Booklet Staplers to block and unblock the sensor (PL 23.18). **The display changes.**

Y N

Check the wire between J8897 pin 2 and P/J8991 pin 2 for an open or short circuit, or a loose or damaged connector. **The wire is OK.**

Y N

Repair/reconnect as required.

Measure the voltage between P/J8991, pins 3 and 1 on the Booklet PWB (BSD 12.25 Office Finisher LX Booklet Staple Positioning). **The voltage is approx. +5VDC.**

Y N

Replace the Booklet PWB (PL 23.21).

Measure the voltage between P/J8991 pin 2 on the Booklet PWB and GND (BSD 12.25 Office Finisher LX Booklet Staple Positioning). Actuate the Booklet Staple Move Home Sensor. **The voltage changes.**

Y N

Replace the Booklet Staple Move Home Sensor (PL 23.18).

Replace the Booklet PWB (PL 23.21).

Alternately execute dC330 [013-028], Stapler Move Motor In and [013-029], Stapler Move Motor Out. **The Stapler Move Motor moves.**

Y N

Check the wires between P/J8992 pins 1~6 on the Booklet PWB and P/J8906 on the Booklet Stapler Move Motor (BSD 12.25 Office Finisher LX Booklet Staple Positioning) for an open or short circuit, or loose or damaged connectors. **The wires are OK.**

Y N

Repair/replace as required.

Monitor the voltage at P/J8994, pin 3 (BSD 12.25 Office Finisher LX Booklet Staple Positioning). Alternately execute dC330 [013-028], Stapler Move Motor In and [013-029], Stapler Move Motor Out. **An AC clock pulse is detected.**

Y N

Check the wire between P/J8994, pin 3 and P/J8995 pin 4. If the wire is OK, replace the Finisher PWB (PL 23.16).

Replace the Booklet Stapler Move Motor (PL 23.18). If the problem persists, replace the Booklet PWB (PL 23.21).

A

A

Go to BSD 12.25 Office Finisher LX Booklet Staple Positioning and check for an intermittent circuit.

313-212 (LX) Booklet Staple Move Position Sensor On Fault

BSD-ON:BSD 12.25 Office Finisher LX Booklet Staple Positioning

Booklet Staple Move Position Sensor does not turn on within designated time period

Initial Actions

- Ensure the Staple Head is free from obstructions
- Check for 013-306 or 013-307 Faults.

Procedure

Execute dC330 [013-144], Booklet Staple Move Position Sensor. Move the Booklet Stapler to block and unblock the sensor (PL 23.18). **The display changes.**

Y N

Check the wire between J8898 pin 2 and P/J8991 pin 5; and the wire between P/J8994, pin 5 and P/J8995 pin 5 for an open or short circuit, or a loose or damaged connector. **The wires are OK.**

Y N

Repair/reconnect as required.

Measure the voltage between P/J8991, pins 6 and 4 on the Booklet PWB (BSD 12.25 Office Finisher LX Booklet Staple Positioning). **The voltage is approx. +5VDC.**

Y N

Replace the Booklet PWB (PL 23.21).

Measure the voltage between P/J8991 pin 5 on the Booklet PWB and GND (BSD 12.25 Office Finisher LX Booklet Staple Positioning). Actuate the Booklet Staple Move Position Sensor. **The voltage changes.**

Y N

Replace the Booklet Staple Move Position Sensor (PL 23.18).

Measure the voltage between J8985 pin 5 on the Finisher PWB and GND (‘). Actuate the Booklet Staple Move Position Sensor. **The voltage changes.**

Y N

Replace the Booklet PWB (PL 23.21). If the problem persists, replace the Finisher PWB (PL 23.16).

Replace the Finisher PWB (PL 23.16).

Alternately execute dC330 [013-028], Stapler Move Motor In and [013-029], Stapler Move Motor Out. **The Stapler Move Motor moves.**

Y N

Check the wires between P/J8992 pins 1~6 on the Booklet PWB and P/J8906 on the Booklet Stapler Move Motor (BSD 12.25 Office Finisher LX Booklet Staple Positioning) for an open or short circuit, or loose or damaged connectors. **The wires are OK.**

Y N

Repair/replace as required.

A B

Monitor the voltage at P/J8994, pin 3 (BSD 12.25 Office Finisher LX Booklet Staple Positioning). Alternately execute dC330 [013-028], Stapler Move Motor In and [013-029], Stapler Move Motor Out. **An AC clock pulse is detected.**

Y N

Check the wire between P/J8994, pin 3 and P/J8995 pin 4. If the wire is OK, replace the Finisher PWB (PL 23.16).

Replace the Booklet Stapler Move Motor (PL 23.18). If the problem persists, replace the Booklet PWB (PL 23.21).

Go to BSD 12.25 Office Finisher LX Booklet Staple Positioning and check for an intermittent circuit.

313-213 (LX) Booklet Staple Move Position Sensor Off Fault

BSD-ON:BSD 12.25 Office Finisher LX Booklet Staple Positioning

Booklet Staple Move Position Sensor does not turn off within designated time period.

Initial Actions

- Ensure the Staple Head is free from obstructions
- Check for 013-306 or 013-307 Faults.

Procedure

Execute dC330 [013-144], Booklet Staple Move Position Sensor. Move the Booklet Stapler to block and unblock the sensor (PL 23.18). **The display changes.**

Y N

Check the wire between J8898 pin 2 and P/J8991 pin 5; and the wire between P/J8994, pin 5 and P8985 pin 5 for an open or short circuit, or a loose or damaged connector. **The wires are OK.**

Y N

Repair/reconnect as required.

Measure the voltage between P/J8991, pins 6 and 4 on the Booklet PWB (BSD 12.25 Office Finisher LX Booklet Staple Positioning). **The voltage is approx. +5VDC.**

Y N

Replace the Booklet PWB (PL 23.21).

Measure the voltage between P/J8991 pin 5 on the Booklet PWB and GND (BSD 12.25 Office Finisher LX Booklet Staple Positioning). Actuate the Booklet Staple Move Position Sensor. **The voltage changes.**

Y N

Replace the Booklet Staple Move Position Sensor (PL 23.18).

Measure the voltage between P8985 pin 5 on the Finisher PWB and GND (BSD 12.25 Office Finisher LX Booklet Staple Positioning). Actuate the Booklet Staple Move Position Sensor. **The voltage changes.**

Y N

Replace the Booklet PWB (PL 23.21). If the problem persists, replace the Finisher PWB (PL 23.16).

Replace the Finisher PWB (PL 23.16).

Alternately execute dC330 [013-028], Stapler Move Motor In and [013-029], Stapler Move Motor Out. **The Stapler Move Motor moves.**

Y N

Check the wires between P/J8992 pins 1~6 on the Booklet PWB and P/J8906 on the Booklet Stapler Move Motor (BSD 12.25 Office Finisher LX Booklet Staple Positioning) for an open or short circuit, or loose or damaged connectors. **The wires are OK.**

Y N

Repair/replace as required.

A B

Monitor the voltage at P/J8994, pin 3 (BSD 12.25 Office Finisher LX Booklet Staple Positioning). Alternately execute dC330 [013-028], Stapler Move Motor In and [013-029], Stapler Move Motor Out. **An AC clock pulse is detected.**

Y N

Check the wire between P/J8994, pin 3 and P8985 pin 4. If the wire is OK, replace the Finisher PWB (PL 23.16).

Replace the Booklet Stapler Move Motor (PL 23.18). If the problem persists, replace the Booklet PWB (PL 23.21).

Go to BSD 12.25 Office Finisher LX Booklet Staple Positioning and check for an intermittent circuit.

313-220 (LX) Booklet Creaser Detect Fault

BSD-ON: BSD 12.17 Office Finisher LX Folding

Control logic cannot detect the Creaser Assembly.

Procedure

NOTE: *If the Booklet Maker has been removed or is not installed, unplug the connector to the Crease assembly.*

Execute dC330 [013-160], Creaser Detected. **The display is 'Low.'**

Y **N**

There is less than 1 VDC at P/J8990 pin 4.

Y **N**

Check the wires between P/J8990 pins 4 and 5. Make sure that P8903 is securely fastened.

Replace the Finisher PWB (PL 23.16).

Go to BSD 12.17 Office Finisher LX Folding and check for an intermittent circuit.

313-306 (LX) Booklet Safety Switches Open

BSD-ON:BSD 12.13 Office Finisher LX Booklet Interlock Switching

Control logic senses that one or more Booklet Safety Switch is open.

Initial Actions

Check for 013-307 Faults.

Procedure

There is +24 VDC between P/J8993 pin 3 on the Booklet PWB and GND.

Y **N**

There is +24 VDC between P/J8993 pin 6 on the Booklet PWB and GND.

Y **N**

Go to the 313-307 (LX) RAP

Go to BSD 12.13 Office Finisher LX Booklet Interlock Switching and check the circuit through the Booklet Safety Switches (PL 23.21).

Replace the Booklet PWB (PL 23.21).

313-307 (LX) Booklet Cover Open

BSD-ON:BSD 12.13 Office Finisher LX Booklet Interlock Switching

Control logic senses that the Booklet Cover is open.

Initial Actions

Ensure the Cover is closed.

Procedure

There is +24 VDC between P/J8993 pin 5 on the Booklet PWB and GND.

Y **N**

GO to BSD 12.13 Office Finisher LX Booklet Interlock Switching and check the circuit from P/J8993 to and from J8899 on the Booklet Stapler Cover Switch (PL 23.21).

Replace the Booklet PWB (PL 23.21).

313-902 Paper remains at Booklet Compiler No Paper Sensor

Paper remains at the Booklet Compile No Paper Sensor.

Procedure

Go to 312-266 (Pro) to troubleshoot the Fault.

313-903 Paper remains at Booklet Folder Roll Exit Sensor

Paper remains at the Booklet Folder Roll Exit Sensor.

Procedure

Go to 312-115 (Pro) and/or 312-180 (Pro) to troubleshoot the Fault.

Procedure

Find the Fault Code in Table 1 . Go to the RAP listed for that Fault Code. Fault Code extensions are defined in Table 2 .

Table 1 Chain 16 Fault Codes

Chain	Link	Ext	Fault Name	Fault Cause	RAP
316	000	09	Cannot create RPC connection with ENS	RPC corrupted or O/S service failure or ENS died	316-1 RAP
316	000	14	Cannot create RPC connection with ENS	RPC corrupted or O/S service failure or ENS died	316-1 RAP
316	000	19	Unable to Create RPC Connection with ENS	RPC corrupted or O/S service failure or ENS died	316-1 RAP
316	000	26	Cannot Create RPC Connection with ENS	RPC corrupted or O/S service failure or ENS died	316-1 RAP
316	001	09	Unable to do startup synchronization	IPC failure or SC not responding	316-1 RAP
316	001	14	Unable to do startup synchronization	IPC failure or SC not responding	316-1 RAP
316	001	19	Unable to do start up synchronization	IPC failure or SC not responding	316-1 RAP
316	001	26	Unable to Start up and Sync with SC	IPC failure or SC not responding	316-1 RAP
316	001	47	Unable to do Start Up Synchronization	IPC failure or SC not responding	316-1 RAP
316	002	09	Unable to register as RPC server	Corrupt RPC or corrupt system configuration or O/S service failure	316-1 RAP
316	002	14	Unable to register as RPC server	Corrupt RPC or corrupt system configuration or O/S service failure	316-1 RAP
316	002	19	Unable to Register as an RPC Server	Corrupt RPC or corrupt system configuration or O/S service failure	316-1 RAP
316	002	26	Could not become an RPC Server	Corrupt O/S RPC Table	316-1 RAP
316	003	09	Too many IPC Handles	Too many existing IPC handlers in IPC handler table	316-1 RAP
316	003	14	Too many IPC Handles	Too many existing IPC handlers in IPC handler table	316-1 RAP
316	003	19	Too many IPC Handlers	Too many existing IPC handles in IPC handler table	316-1 RAP
316	003	90	Utility Insert Handler Failure	Too Many IPC Handlers in IPC Handler Table	316-1 RAP

Table 1 Chain 16 Fault Codes

Chain	Link	Ext	Fault Name	Fault Cause	RAP
316	004	09	Database Error known by Service Registry		316-2 RAP
316	004	14	RPC call failure to SBC registration service	Registration Service failed	316-1 RAP
316	004	19	RPC Connect Failure to SBC Registration Service	Registration Service Failed.	316-1 RAP
316	004	26	RPC Connect Failure to SBC Registration Service	RPC Communication Problem; Registration Service Failed	316-1 RAP
316	005	14	RPC call failure to SBC registration service	Registration service failed to respond in time	316-1 RAP
316	005	19	RPC Call Failure to SBC Registration Service	Registration Service Failed to Respond in Time	316-1 RAP
316	005	26	RPC Call Failure to SBC Registration Service	Registration Service failed to respond in time.	316-1 RAP
316	005	46	RPC Call Failure to SBC Registration Service (to register with)	Registration Service Failed to Respond in Time (null returned)	316-1 RAP
316	005	90	RPC call to SBC Registration failed	Registration Service failed to respond. SW error.	316-1 RAP
316	005	92	RPC Call Failure to SBC Registration Service (to register with)	Registration Service Failed to Respond in Time (null returned)	316-1 RAP
316	006	09	Cannot register for events	Event Notification Service unable to process request; ENS died	316-1 RAP
316	006	19	Cannot register for events	Event Notification Service unable to process request; ENS died	316-1 RAP
316	007	92	Invalid RPC Data Received	Unable to register; Can't open IPC queue; SW Error; O/S Failure; Driver Failure	316-1 RAP
316	009	09	Invalid IPC Data Received	SW Error; Corrupt Disk; Bad Memory	316-1 RAP
316	010	14	Unable to send IPC	Service being communicated to is dead; Queue is full; No Queue; System Resource Corrupted	316-1 RAP
316	013	14	Digital Copier ENS synchronization error	System RPC info corrupt or DC ENS dead	316-1 RAP
316	014	14	Digital Copier ENS registration error	System RPC info corrupt or DC ENS dead	316-1 RAP
316	015	14	SESS data store environmental variable not set	Corrupt environment variable or configuration script error	316-1 RAP

Table 1 Chain 16 Fault Codes

Chain	Link	Ext	Fault Name	Fault Cause	RAP
316	015	19	SESS data store environmental variable not set	Corrupt environment variable or configuration script error	316-1 RAP
316	016	14	Data Store init. failed	SESS Faults 206, 207 or Data store not created or corrupt environment variable	316-1 RAP
316	016	19	Data Store init. failed	SESS Faults 206, 207 or Data store not created or corrupt environment variable	316-1 RAP
316	016	99	IPC open, create, signal queue failed	Service is unable to open, create, or signal IPC queue.	316-2 RAP
316	017	19	Send Event Failure Unable to send event to SBC ENS	Invalid event info or data, ENS failure, System RPC info corrupt	316-1 RAP
316	021	19	SBC PM Registration Connect Error	LynxOS failure of system call gethostname	316-1 RAP
316	021	26	Service could not get Host Name	Service could not get Host Name	316-1 RAP
316	021	46	Unable to Get Host Name	SW error.	316-1 RAP
316	023	09	RPC Call Failure to ENS	ENS Service Failed to Respond in Time	316-1 RAP
316	023	26	RPC Call Failure to ENS	ENS Service Failed to Respond in Time	316-1 RAP
316	026	09	Memory allocation failure	SW Error, system resource failure	316-1 RAP
316	026	14	MALLOC error	Memory Leak, SW Bug, Memory Corrupt, Virtual Memory Exhausted, process Size Exceeding System Limits	316-1 RAP
316	026	46	Memory Allocation Error	Memory Leak, SW Bug, Memory Corrupt, Virtual Memory Exhausted, process Size Exceeding System Limits	316-1 RAP
316	026	90	Malloc Error	Memory Leak; SW Error; Virtual Memory Exhausted; process Size Exceeding System Limits	316-1 RAP
316	026	92	Memory Allocation Fault	Memory Leak; SW Bug; Memory Corrupt; Virtual Memory Exhausted; process Size Exceeding System Limits	316-1 RAP

Table 1 Chain 16 Fault Codes

Chain	Link	Ext	Fault Name	Fault Cause	RAP
316	027	90	Unable to obtain well known Queue ID	Invalid Queue Requested; No Range Environment Variable; Invalid Range Environment Variable	316-1 RAP
316	028	90	Invalid Range String	Range Environment Variable not set; Range Environment Variable set to Invalid Numeric String	316-1 RAP
316	030	19	Unable to Obtain Client RPC handle to EJS	RPC corrupted; O/S Service Failure; ENS died.	316-1 RAP
316	031	09	Invalid Event Notification Received	SW Error in the ENS Service or in the Service generating the Fault	316-1 RAP
316	032	19	NVM Connection Failure	Invalid System Config; SW Error; NVM Corrupted; NVM Non existent	316-1 RAP
316	039	00	Pthread Create Error	UNIX problem creating a thread; O/S Failure	316-1 RAP
316	040	92	Semaphore Fault	O/S error	316-1 RAP
316	048	09	Unable to set binding	SW Error IPC failure system resource exhaustion. Unable to set binding	316-1 RAP
316	048	14	Can not set SBC client binding	IPC failure. OS failure. Semaphore allocation failure.	316-1 RAP
316	048	90	Can not set SBC client binding	IPC failure. OS failure. Semaphore allocation failure.	316-1 RAP
316	150	09	Cannot send registration event	RPC corrupted or O/S service failure or ENS died. Cannot send registration event	316-1 RAP
316	150	14	Unable to obtain RPC transport	System RPC corrupt or invalid configuration	316-1 RAP
316	150	19	Unable to sync peer (within SBC) infrastructure services	Infrastructure service(s) died/ gone or clogged or s/w error. Infrastructure service died/ gone or clogged or s/w error	316-1 RAP
316	150	26	Fault Service Failed to Write to Log	Disk Write Error SW Error.	316-1 RAP
316	150	90	Invalid IPC Request Destination	SW Error	316-1 RAP
316	150	92	Consumer Interface Fault	Data Store failure	316-1 RAP
316	151	09	Invalid IPC command	Message corrupt	316-1 RAP
316	151	14	SNMP event registration failed	SC IPC Queue full Excessive 16-750-14 faults.	316-1 RAP
316	151	19	Invalid IPC command	Message corrupt	316-1 RAP

Table 1 Chain 16 Fault Codes

Chain	Link	Ext	Fault Name	Fault Cause	RAP
316	151	26	Fault Service Failed to get a Log Handle	SW Error.	316-1 RAP
316	151	90	Put Environment Variable Failure	Malloc Failure; SW Error; Virtual Memory Exhausted; process Size Exceeding Configuration System Limit.	316-1 RAP
316	152	09	Internal IPC failure	Software error; System resource exhaustion	316-1 RAP
316	152	14	Empty internal event received by ENS	S/W error.	316-1 RAP
316	152	19	Unable to send request to SESS	SESS System Control broken or too many IPC messages.	316-1 RAP
316	152	26	Fault Service could not open Fault Log	SW Error; Bad Disk. Fault Service could not open Fault Log	316-1 RAP
316	153	09	Unable to obtain IPC queue	File system corrupt or full or disk problem	316-1 RAP
316	153	19	NVM Save Failure	SW Error; Mother Board Failure	316-1 RAP
316	154	19	NVM Read Failure	SW Error; Mother Board Failure	316-1 RAP
316	155	19	SBC Faulted to Boot from Alternate Disk Partition	Corrupted SW; H/W Faults. File System Corrupted. SBC	316-1 RAP
316	156	19	ServiceRun loop failed.	Poll select failed.	316-1 RAP
316	160	09	SBC Registration Service process death	Software error (technically not possible)	316-1 RAP
316	161	09	Cannot send registration event	Software error.	316-1 RAP
316	162	09	SBC Platform Manager Service process death	Software error. Check fault log for more specific reasons.	316-1 RAP
316	163	09	SBC DM Agent Service process death	Software error.Check fault log for more specific reasons.	316-1 RAP
316	602	38	RPC Server Registration Failed	Corrupt O/S RPC Table	316-2 RAP
316	674	00	XSA RPC Server Death	RPC Server Not Responding	316-2 RAP
316	674	09	XSA RPC Server Death	RPC Server Not Responding	316-2 RAP
316	675	00	XSA Database Server Death	Database Server Not Responding	316-2 RAP
316	701	00	Unable to communicate with XSA database	LOA Failure	316-2 RAP
316	701	99	Unable to communicate with XSA database	LOA Failure.SW error, XSA database crash.	316-2 RAP
316	702	00	Unable to communicate with XSA database	LOA Failure	316-2 RAP

Table 1 Chain 16 Fault Codes

Chain	Link	Ext	Fault Name	Fault Cause	RAP
316	702	95	Unable to communicate with XSA database	LOA Failure	316-2 RAP
316	740	19	Error - SBC Hard Disk IIO Failure	Immediate image overwrite failed on SBC hard disk.	316-4 RAP
316	741	19	E5.0 ODIO Failure		316-4 RAP
316	751	00	Database Error known by Service Registry or registry not available.	S/W error.	316-2 RAP
316	752	00	SRS returns to Login Service “invalid fields, invalid data, or missing data”		316-2 RAP
316	752	07	Queue Service Library Initialization Failed	Data Store error; S/W error	316-1 RAP
316	752	14	Retry SESS Sys Control event registration	SC Not Responding; SC IPC Queue Full; SC IPC Queue does not exist	316-2 RAP
316	752	95	File transfer operation failure	File transfer failure	316-2 RAP
316	753	00	No IPC Response	Login gets no response from SRS	316-2 RAP
316	754	00	Service Registry Bad data / Corrupted.		316-2 RAP
316	755	00	Service Registry cannot initialize database		316-2 RAP
316	760	09	Scan To File process death	Software error	316-3 RAP
316	760	47	Incorrect Checksum partition 1	Found incorrect checksum partition 1 during Software Verify check; Bad disk; bad s/w	316-2 RAP
316	761	09	LPD process death	Software error	316-3 RAP
316	761	68	Login gets no response from SRS	No IPC Response	316-2 RAP
316	762	09	Netware process death	Netware process failed. Software error	316-3 RAP
316	762	47	Missing File	Missing file found during Software Verify check; Disk access problem; Configuration problem	316-2 RAP
316	762	68	Service Registry Bad/Corrupted data		
316	763	09	NetBios process death	Software error	316-3 RAP
316	763	14	Reached internal limit for events	Reached internal limit for events	316-2 RAP
316	763	47	Invalid Permission	Invalid Permission found during Software Verify check	316-2 RAP

Table 1 Chain 16 Fault Codes

Chain	Link	Ext	Fault Name	Fault Cause	RAP
316	764	09	AppleTalk process death	Software error	316-3 RAP
316	765	09	Banyan Vines process death	Software error	316-3 RAP
316	766	09	Adobe process failure	Software error	316-3 RAP
316	767	09	HP PCL process death	Software error	316-3 RAP
316	767	19	Request to cancel spooling job error	Job Map Library unable to cancel job	316-2 RAP
316	768	09	Parallel process death	Software error	316-3 RAP
316	769	09	HTTP process death	Software error	316-3 RAP
316	770	09	Unexpected process death	Software error	316-3 RAP
316	771	09	Print Service EJS process death	Software error	316-2 RAP
316	772	09	SBC Print SPI process death	Software error	316-2 RAP
316	772	19	Failure to set SBC Platform Manager service state	Software error	316-2 RAP
316	772	46	TCP/IP status file error.	TCP/IP address already being used.	316-3 RAP
316	773	09	SBC Print Service Surrogate process death	Software error	316-2 RAP
316	774	09	SBC Protocol Module process death	Software error	316-2 RAP
316	776	09	SBC Fault Service process death	Software error	316-2 RAP
316	777	09	SBC Completed Job Log Service/SPI process death	Software error	316-2 RAP
316	778	09	SBC Configuration Utility process death	Software error	316-2 RAP
316	779	09	SBC Diagnostic Service process death	Software error	316-2 RAP
316	780	09	SBC Authentication SPI process death	Software error	316-2 RAP
316	781	09	SBC Counters Utility process death	Software error	316-2 RAP
316	782	09	SBC Configuration Synchronization process failure	Software error	316-2 RAP
316	785	09	SBC SNMP Agent process failure	Software error	316-3 RAP
316	786	09	Token Ring process death	Software error	316-3 RAP
316	787	09	Sub agent process death	Software error	316-3 RAP
316	788	09	Serial process death	Software error	316-3 RAP
316	789	09	Connectivity Configuration Server process death	Software error	316-3 RAP
316	789	46	Autonet status file error	Failed performing Autonet IP process	316-3 RAP

Table 1 Chain 16 Fault Codes

Chain	Link	Ext	Fault Name	Fault Cause	RAP
316	789	47	SESS Apple test unknown error	SESS Diagnostic failure.	316-3 RAP
316	790	09	Lan Fax process death	Software error	316-3 RAP
316	790	47	SESS Banyan test unknown error	SESS Diagnostic failure.	316-3 RAP
316	791	09	Accounting process death	Software error	316-2 RAP
316	792	09	Tiff process death	Software error	316-2 RAP
316	792	19	Lan Fax DLM is not defined.	Lan Fax DLM is not defined.	316-2 RAP
316	793	09	Port9100 process death	software error	316-2 RAP
316	793	19	Job Based Accounting DLM is not defined.	Job Based Accounting DLM is not defined.	316-2 RAP
316	795	09	Slpsa process death	software error	316-3 RAP
316	796	09	SSDP process death	Software error	316-3 RAP
316	797	09	USB process death	Software error	316-3 RAP
316	798	09	POP3 process death	Software error	316-3 RAP
316	799	09	SMTP process death	Software error	316-3 RAP
316	800	46	Ethernet Initialization failure	Unable to connect to device when setting up IP over Ethernet	316-3 RAP
316	801	46	Token Ring Initialization failure	Unable to connect to device when setting up IP over Token Ring	316-3 RAP
316	802	46	DHCP Initialization failure	Error occurred when attempting to get the IP data from the DHCP server.	316-3 RAP
316	803	46	RARP Initialization failure	Unable to get the IP address from the RARP server.	316-3 RAP
316	806	00	SESS NetBIOS test memory allocation error	CPI Death Error	316-2 RAP
316	807	00	SESS NetBIOS test memory allocation error	JobLog death Error	316-2 RAP
316	808	00	SESS NetBIOS test memory allocation error	Job Tracker death Error	316-2 RAP
316	809	00	SESS NetBIOS test memory allocation error	Kerberos Death Error	316-2 RAP
316	810	00	SESS NetBIOS test memory allocation error	Scan to Distribution Death Error	316-2 RAP
316	811	00	SESS NetBIOS test memory allocation error	SMB Death Error	316-2 RAP
316	812	00	SESS NetBIOS test memory allocation error	TCP/IP Death Error	316-2 RAP
316	813	00	SESS NetBIOS test memory allocation error	WS Scan Temp Death Error	316-2 RAP

Table 1 Chain 16 Fault Codes

Chain	Link	Ext	Fault Name	Fault Cause	RAP
316	814	00	SESS NetBIOS test memory allocation error	Scan Compressor Death Error	316-2 RAP
316	815	09	Service Registry Process Death		316-2 RAP
316	934	19	Job Based Accounting not enough dc memory.	Job Based Accounting not enough dc memory.	316-2 RAP

Table 2 Fault Code Extensions

Extension number	Definition
00 - 07	Queue Utility Faults
09	SBC Registration Service Faults.
14	Event Notification Service Faults.
19	Platform Manager Faults.
26	Fault Log Service Faults
38	Completed Job Log Service Faults
46	Config Utility Faults
47	Diagnostic Service Faults
68	Net Auth Service Faults
90	
92	Internal Print Service Faults
95	Transfer Service Faults
99	

316-1 RAP

Initial Actions

Switch the power off, then on. If the problem is not resolved, continue with this procedure.

Procedure

Refer to the error log and try to determine under what situations the problem is occurring.

The problem is related to a specific job, client, or Page Description Language (PDL).

Y N

Reload the software (GP 9). **The problem remains.**

Y N

Switch the power off, then on. Return to Call Flow.

Replace the following, one at-a-time, until the problem is corrected:

- SBC Hard Disk & Hard Disk Cable.
- SBC DRAM SIMMS
- SBC PWB

The problem occurs on one particular job from one particular client.

Y N

The problem occurs on all jobs sent from one client.

Y N

The problem occurs with one job from any client.

Y N

Replace the following one at a time until the problem is corrected.

- SBC Hard Disk & Hard Disk Cable.
- SBC DRAM SIMMS.
- SBC PWB.

Another WC 7556F printer is available.

Y N

Escalate the service call.

The problem is repeatable on both printers.

Y N

Reload software on the problem machine. (GP 9). Ensure that the latest version is installed. If the problem continues, escalate the service call.

Inform Field Engineering that a Software Problem Action Report (SPAR) needs to be generated.

Ensure the following:

- Have the system administrator (SA) check the network configuration on the client (Compare to working client).
- Have the SA ensure that the client has the required resources.
- Have the system administrator reload the print driver on the client.
- If the problem continues, have the customer call the customer support center.

Reload the print driver on the affected workstation.

316-2 RAP

Non-Shutdown fault procedure

Initial Actions

For non-shutdown specified Network Controller faults, there need be no action taken. If the fault seems related to a customer complaint, perform the Procedure.

Procedure

Switch the power off, then on. If the problem continues, go to the 316-1 RAP.

316-3 RAP

This RAP addresses Network Controller faults related to network connectivity.

Procedure

Verify that the server or network with which you are trying to connect is operating. Go to the OF 16-1 Network Printing Problems Entry RAP, Network Printing Problems Entry RAP. If the problem is not resolved, go to the 316-1 RAP.

316-4 RAP

This RAP troubleshoots Network Controller fault codes related to the Image Overwrite options.

Initial Actions

Print a Configuration Report (GP 6) and determine if Immediate Image Overwrite and/or On-Demand Overwrite options are enabled.

Procedure

If the configuration report shows Image Overwrite as installed/disabled:

- Enter the **Administrator Mode** (GP 2)
- Select the **Tools Tab**.
- Select **Security Settings**.
- Enable the required Feature.

If the problem continues, go to the 316-1 RAP.

319-300 RAP

Unable to read or write data from the Image Disk

Procedure

Switch power off then on. **The problem continues.**

Y **N**

Return to service call procedures.

Perform the following:

- Check the connections of the power harness and the red SATA data cable from the Disk Drive (PL 35.2) to the SBC PWB. Check for damage. Repair as required.
- If no problems are found, replace the Disk Drive (PL 35.2). Perform GP 9 Software Upgrade. If the problem continues, replace the SBC PWB (PL 35.2).

319-301 RAP

Unable to write data to the Image Disk

Procedure

Switch power off then on. **The problem continues.**

Y **N**

Return to service call procedures.

Perform the following:

- Check the connections of the power harness and the red SATA data cable from the Disk Drive (PL 35.2) to the SBC PWB. Check for damage. Repair as required.
- If no problems are found, replace the Disk Drive (PL 35.2). Perform GP 9 Software Upgrade. If the problem continues, replace the SBC PWB (PL 35.2).

319-302 RAP

Bad Data received from the Disk (i.e. disk returns data other than a read or write operation in response to a read or write request from)

Procedure

Switch power off then on. **The problem continues.**

Y **N**

Return to service call procedures.

Perform the following:

- Check the connections of the power harness and the red SATA data cable from the Disk Drive (PL 35.2) to the SBC PWB. Check for damage. Repair as required.
- If no problems are found, replace the Disk Drive (PL 35.2). Perform GP 9 Software Upgrade. If the problem continues, replace the SBC PWB (PL 35.2).

319-303 RAP

Unable to Format the Image Disk

Procedure

Switch power off then on. **The problem continues.**

Y **N**

Return to service call procedures.

Perform the following:

- Check the connections of the power harness and the red SATA data cable from the Disk Drive (PL 35.2) to the SBC PWB. Check for damage. Repair as required.
- If no problems are found, replace the Disk Drive (PL 35.2). Perform GP 9 Software Upgrade. If the problem continues, replace the SBC PWB (PL 35.2).

319-310 RAP

System Disk does not return capacity information during Power Up.

Procedure

Switch power off then on. **The problem continues.**

Y **N**

Return to service call procedures.

Perform the following:

- Check the connections of the power harness and the red SATA data cable from the Disk Drive (PL 35.2) to the SBC PWB. Check for damage. Repair as required.
- If no problems are found, replace the Disk Drive (PL 35.2). Perform GP 9 Software Upgrade. If the problem continues, replace the SBC PWB (PL 35.2).

319-401 RAP

Out of Memory caused by a Stress Document

Procedure

No action is required. If 19-401 remains for more than 5 minutes, switch power off then on. If the problem continues, perform GP 9.

319-402 RAP

Out of Memory caused by a Stress Job

Procedure

No action is required. If the fault remains for more than 5 minutes, switch power off then on. If the problem continues, go to GP 9 and perform the Regular AltBoot procedure.

319-403 RAP

Out of Memory with greater than one job in EPC

Procedure

Rescan job. If the Problem continues, rescan job according to EPC capabilities.

319-404 RAP

Video Compressor DVMA Timeout

Procedure

Rescan the job.

319-405 RAP

Video Decompressor DVMA Timeout

Procedure

Rescan the job.

319-406 RAP

Video Loopback DVMA Timeout

Procedure

Rescan the job.

319-409 RAP

Video determines that it cannot guarantee the integrity of the job being processed.

Procedure

Reconcile completed jobs with uncompleted jobs. Switch the power off then on. Rerun uncompleted jobs.

319-410-00 RAP

Mark Output Timeout. Incomplete image data transfer within the prescribed period. Machine will attempt to recover (may take more then 30 sec.).

Procedure

If the job does not recover, switch the power off/on and rerun the job. If the problem continues, go to GP 9 and perform the Regular AltBoot procedure.

If Smears, Streaks, Lines, or Color Misregistration occur when using DADF only, and/or DADF jobs appear to make the engine pause longer than normal before starting, reseat or replace the EPC Memory on the SBC PWB (PL 35.2).

If copying from the platen and job is deleted when the fault occurs, the NVM may be corrupt.

1. Enter Diagnostics dC301.
2. Select [Copier] (left), [Scanner] (center), [All] (right).
3. Select [Initialize] and exit Diagnostics.
4. Switch the power off, then on.
5. **See Eureka tip 1078835 if software level is 061.120.200.35301 or higher, for reporting.** Make sure to complete and send the form attached to the tip.

319-410-01 RAP

Mark Output Timeout. Incomplete image data transfer within the prescribed period. Job has been deleted.

Procedure

Switch the power off/on and rerun the job. If the problem continues, go to GP 9 and perform the Regular AltBoot procedure.

If Smears, Streaks, Lines, or Color Misregistration occur when using DADF only, and/or DADF jobs appear to make the engine pause longer than normal before starting, reseat or replace the EPC Memory on the SBC PWB (PL 35.2).

If copying from the platen and job is deleted when the fault occurs, the NVM may be corrupt.

1. Enter Diagnostics dC301.
2. Select [Copier] (left), [Scanner] (center), [All] (right).
3. Select [Initialize] and exit Diagnostics.
4. Switch the power off, then on.
5. **See Eureka tip 1078835 if software level is 061.120.200.35301 or higher, for reporting**. Make sure to complete and send the form attached to the tip.

319-410-2 RAP

Compress Image timeout. Incomplete image data transfer within the prescribed period. Job has been deleted.

Procedure

Switch the power off/on and rerun the job. If the problem continues, go to GP 9 and perform the Regular AltBoot procedure. If the problem continues, replace the EPC memory (PL 35.2) in the SBC.

If Smears, Streaks, Lines, or Color Misregistration occur when using DADF only, and/or DADF jobs appear to make the engine pause longer than normal before starting, reseat or replace the EPC Memory on the SBC PWB (PL 35.2).

If copying from the platen and job is deleted when the fault occurs, the NVM may be corrupt.

1. Enter Diagnostics dC301.
2. Select [Copier] (left), [Scanner] (center), [All] (right).
3. Select [Initialize] and exit Diagnostics.
4. Switch the power off, then on.
5. **See Eureka tip 1078835 if software level is 061.120.200.35301 or higher, for reporting**. Make sure to complete and send the form attached to the tip.

319-410-3 RAP

Decompress Image timeout. Incomplete image data transfer within the prescribed period. Job has been deleted.

Procedure

Switch the power off/on and rerun the job. If the problem continues, go to GP 9 and perform the Regular AltBoot procedure.

If Smears, Streaks, Lines, or Color Misregistration occur when using DADF only, and/or DADF jobs appear to make the engine pause longer than normal before starting, reseat or replace the EPC Memory on the SBC PWB (PL 35.2).

If copying from the platen and job is deleted when the fault occurs, the NVM may be corrupt.

1. Enter Diagnostics dC301.
2. Select [Copier] (left), [Scanner] (center), [All] (right).
3. Select [Initialize] and exit Diagnostics.
4. Switch the power off, then on.
5. **See Eureka tip 1078835 if software level is 061.120.200.35301 or higher, for reporting**. Make sure to complete and send the form attached to the tip.

319-410-4 RAP

Merge Image timeout. Incomplete image data transfer within the prescribed period. Job has been deleted.

Procedure

Switch the power off/on and rerun the job. If the problem continues, go to GP 9 and perform the Regular AltBoot procedure.

If Smears, Streaks, Lines, or Color Misregistration occur when using DADF only, and/or DADF jobs appear to make the engine pause longer than normal before starting, reseat or replace the EPC Memory on the SBC PWB (PL 35.2).

If copying from the platen and job is deleted when the fault occurs, the NVM may be corrupt.

1. Enter Diagnostics dC301.
2. Select [Copier] (left), [Scanner] (center), [All] (right).
3. Select [Initialize] and exit Diagnostics.
4. Switch the power off, then on.
5. **See Eureka tip 1078835 if software level is 061.120.200.35301 or higher, for reporting**. Make sure to complete and send the form attached to the tip.

319-410-5 RAP

Rotate Image timeout. Incomplete image data transfer within the prescribed period. Job has been deleted.

Procedure

Switch the power off/on and rerun the job. If the problem continues, go to GP 9 and perform the Regular AltBoot procedure.

If Smears, Streaks, Lines, or Color Misregistration occur when using DADF only, and/or DADF jobs appear to make the engine pause longer than normal before starting, reseat or replace the EPC Memory on the SBC PWB (PL 35.2).

If copying from the platen and job is deleted when the fault occurs, the NVM may be corrupt.

1. Enter Diagnostics dC301.
2. Select [Copier] (left), [Scanner] (center), [All] (right).
3. Select [Initialize] and exit Diagnostics.
4. Switch the power off, then on.
5. **See Eureka tip 1078835 if software level is 061.120.200.35301 or higher, for reporting**. Make sure to complete and send the form attached to the tip.

319-410-6 RAP

Network Input Failure. Incomplete image data transfer. Job has been deleted.

Procedure

Switch the power off/on and rerun the job. If the problem continues, go to GP 9 and perform the Regular AltBoot procedure.

If Smears, Streaks, Lines, or Color Misregistration occur when using DADF only, and/or DADF jobs appear to make the engine pause longer than normal before starting, reseat or replace the EPC Memory on the SBC PWB (PL 35.2).

If copying from the platen and job is deleted when the fault occurs, the NVM may be corrupt.

1. Enter Diagnostics dC301.
2. Select [Copier] (left), [Scanner] (center), [All] (right).
3. Select [Initialize] and exit Diagnostics.
4. Switch the power off, then on.
5. **See Eureka tip 1078835 if software level is 061.120.200.35301 or higher, for reporting**. Make sure to complete and send the form attached to the tip.

319-410-7 RAP

E-Fax Send/Receive Failure. Incomplete image data transfer. Job has been deleted.

Procedure

Switch the power off/on and rerun the job. If the problem continues, go to GP 9 and perform the Regular AltBoot procedure.

If Smears, Streaks, Lines, or Color Misregistration occur when using DADF only, and/or DADF jobs appear to make the engine pause longer than normal before starting, reseat or replace the EPC Memory on the SBC PWB (PL 35.2).

If copying from the platen and job is deleted when the fault occurs, the NVM may be corrupt.

1. Enter Diagnostics dC301.
2. Select [Copier] (left), [Scanner] (center), [All] (right).
3. Select [Initialize] and exit Diagnostics.
4. Switch the power off, then on.
5. **See Eureka tip 1078835 if software level is 061.120.200.35301 or higher, for reporting**. Make sure to complete and send the form attached to the tip.

319-410-8 RAP

Scan Input Failure. Incomplete image data transfer. Job has been deleted.

Procedure

Switch the power off/on and rerun the job. If the problem continues, go to GP 9 and perform the Regular AltBoot procedure.

If Smears, Streaks, Lines, or Color Misregistration occur when using DADF only, and/or DADF jobs appear to make the engine pause longer than normal before starting, reseat or replace the EPC Memory on the SBC PWB (PL 35.2).

If there is a black background, but the prints are good, replace the IIT PWB (PL 1.8) item 3, and check the values of NVM 715-050 through 715-099 against the factory sheet.

If copying from the platen and job is deleted when the fault occurs, the NVM may be corrupt.

1. Enter Diagnostics dC301.
2. Select [Copier] (left), [Scanner] (center), [All] (right).
3. Select [Initialize] and exit Diagnostics.
4. Switch the power off, then on.
5. **See Eureka tip 1078835 if software level is 061.120.200.35301 or higher, for reporting**. Make sure to complete and send the form attached to the tip.

319-410-9 RAP

Byte Count Error. Incomplete image data transfer. Job has been deleted.

Procedure

Switch the power off/on and rerun the job. If the problem continues, go to GP 9 and perform the Regular AltBoot procedure.

If Smears, Streaks, Lines, or Color Misregistration occur when using DADF only, and/or DADF jobs appear to make the engine pause longer than normal before starting, reseat or replace the EPC Memory on the SBC PWB (PL 35.2).

If copying from the platen and job is deleted when the fault occurs, the NVM may be corrupt.

1. Enter Diagnostics dC301.
2. Select [Copier] (left), [Scanner] (center), [All] (right).
3. Select [Initialize] and exit Diagnostics.
4. Switch the power off, then on.
5. **See Eureka tip 1078835 if software level is 061.120.200.35301 or higher, for reporting**. Make sure to complete and send the form attached to the tip.

319-410-10 RAP

Set Up Too Late. Incomplete image data transfer. Job has been deleted.

Procedure

Switch the power off/on and rerun the job. If the problem continues, go to GP 9 and perform the Regular AltBoot procedure.

If Smears, Streaks, Lines, or Color Misregistration occur when using DADF only, and/or DADF jobs appear to make the engine pause longer than normal before starting, reseat or replace the EPC Memory on the SBC PWB (PL 35.2).

If copying from the platen and job is deleted when the fault occurs, the NVM may be corrupt.

1. Enter Diagnostics dC301.
2. Select [Copier] (left), [Scanner] (center), [All] (right).
3. Select [Initialize] and exit Diagnostics.
4. Switch the power off, then on.
5. **See Eureka tip 1078835 if software level is 061.120.200.35301 or higher, for reporting**. Make sure to complete and send the form attached to the tip.

319-410-11 RAP

DMA Master Abort. Incomplete image data transfer. Job has been deleted.

Procedure

Switch the power off/on and rerun the job. If the problem continues, go to GP 9 and perform the Regular AltBoot procedure.

If Smears, Streaks, Lines, or Color Misregistration occur when using DADF only, and/or DADF jobs appear to make the engine pause longer than normal before starting, reseat or replace the EPC Memory on the SBC PWB (PL 35.2).

If copying from the platen and job is deleted when the fault occurs, the NVM may be corrupt.

1. Enter Diagnostics dC301.
2. Select [Copier] (left), [Scanner] (center), [All] (right).
3. Select [Initialize] and exit Diagnostics.
4. Switch the power off, then on.
5. **See Eureka tip 1078835 if software level is 061.120.200.35301 or higher, for reporting**. Make sure to complete and send the form attached to the tip.

319-410-12 RAP

Huffman Error. Incomplete image data transfer. Job has been deleted.

Procedure

Switch the power off/on and rerun the job. If the problem continues, go to GP 9 and perform the Regular AltBoot procedure.

If Smears, Streaks, Lines, or Color Misregistration occur when using DADF only, and/or DADF jobs appear to make the engine pause longer than normal before starting, reseat or replace the EPC Memory on the SBC PWB (PL 35.2).

If copying from the platen and job is deleted when the fault occurs, the NVM may be corrupt.

1. Enter Diagnostics dC301.
2. Select [Copier] (left), [Scanner] (center), [All] (right).
3. Select [Initialize] and exit Diagnostics.
4. Switch the power off, then on.
5. **See Eureka tip 1078835 if software level is 061.120.200.35301 or higher, for reporting**. Make sure to complete and send the form attached to the tip.

319-410-13 RAP

EOR Error. Incomplete image data transfer. Job has been deleted.

Procedure

Switch the power off/on and rerun the job. If the problem continues, go to GP 9 and perform the Regular AltBoot procedure.

If Smears, Streaks, Lines, or Color Misregistration occur when using DADF only, and/or DADF jobs appear to make the engine pause longer than normal before starting, reseat or replace the EPC Memory on the SBC PWB (PL 35.2).

If copying from the platen and job is deleted when the fault occurs, the NVM may be corrupt.

1. Enter Diagnostics dC301.
2. Select [Copier] (left), [Scanner] (center), [All] (right).
3. Select [Initialize] and exit Diagnostics.
4. Switch the power off, then on.
5. **See Eureka tip 1078835 if software level is 061.120.200.35301 or higher, for reporting**. Make sure to complete and send the form attached to the tip.

319-750 RAP

The System detects that the EPC Memory Size configuration has changed during the Power On Sequence

Procedure

Rerun the job.

319-752 RAP

The System detects that the EPC Memory Size configuration has changed during the Power On Sequence

Procedure

Switch machine off then on.

319-754 RAP

The System detects that the Image Disk Configuration (Present vs. Not Present) has changed during the Power On Sequence

Procedure

Check the DC power connector on the HDD. Switch machine off then on.

319-760 RAP

Test Patterns are missing from EPC

Procedure

Switch power off then on. **The problem continues.**

Y **N**

Return to service call procedures.

Go to GP 9 and perform the Regular AltBoot procedure.

320-302 RAP

Fax Card Hardware or Software error.

Procedure

Print a Configuration Sheet. **The Config Sheet indicates the Fax PWB is installed.**

Y **N**

Install a Fax PWB.

Check the following:

- Ensure the FAX is enabled
- Check that the FAX is securely connected to SBC.
- Check that the FAX phone wire is securely connected
- Go to the OF 17-1 FAX Entry RAP and check that the FAX settings are correct
- If the above checks are OK, replace the FAX PWB (PL 35.2).

320-303 RAP

Fax Card Hardware or Software error.

Procedure

Print a Configuration Sheet. **The Config Sheet indicates the Fax PWB is installed.**

Y **N**

Install a Fax PWB.

Check the following:

- Ensure the FAX is enabled
- Check that the FAX is securely connected to SBC.
- Check that the FAX phone wire is securely connected
- Go to the OF 17-1 FAX Entry RAP and check that the FAX settings are correct
- If the above checks are OK, replace the FAX PWB (PL 35.2).

320-305 RAP

Fax Card Hardware or Software error.

Procedure

Print a Configuration Sheet. **The Config Sheet indicates the Fax PWB is installed.**

Y **N**

Install a Fax PWB.

Check the following:

- Ensure the FAX is enabled
- Check that the FAX is securely connected to SBC.
- Check that the FAX phone wire is securely connected
- Go to the OF 17-1 FAX Entry RAP and check that the FAX settings are correct
- If the above checks are OK, replace the FAX PWB (PL 35.2).

320-320 RAP

5 instances of an unrecoverable fax fault and has not been cleared by a card reset.

Procedure

Print a Configuration Sheet. **The Config Sheet indicates the Fax PWB is installed.**

Y **N**

Install a Fax PWB.

Check the following:

- Ensure the FAX is enabled
- Check that the FAX is securely connected to SBC.
- Check that the FAX phone wire is securely connected
- Go to the OF 17-1 FAX Entry RAP and check that the FAX settings are correct
- If the above checks are OK, replace the FAX PWB (PL 35.2).

320-322 RAP

NV device not fitted to basic fax card

Procedure

Print a Configuration Sheet. **The Config Sheet indicates the Fax PWB is installed.**

Y **N**

Install a Fax PWB.

Check the following:

- Ensure the FAX is enabled
- Check that the FAX is securely connected to SBC.
- Check that the FAX phone wire is securely connected
- Go to the OF 17-1 FAX Entry RAP and check that the FAX settings are correct
- If the above checks are OK, replace the FAX PWB (PL 35.2).

320-323 RAP

Fax system memory is low. (<6MB)

Procedure

Print a Configuration Sheet. **The Config Sheet indicates the Fax PWB is installed.**

Y **N**

Install a Fax PWB.

Check the following:

- Ensure the FAX is enabled
- Check that the FAX is securely connected to SBC.
- Check that the FAX phone wire is securely connected
- Go to the OF 17-1 FAX Entry RAP and check that the FAX settings are correct
- If the above checks are OK, replace the FAX PWB (PL 35.2).

320-324 RAP

Not enough memory to use Fax Service

Procedure

Print a Configuration Sheet. **The Config Sheet indicates the Fax PWB is installed.**

Y **N**

Install a Fax PWB.

Check the following:

- Ensure the FAX is enabled
- Check that the FAX is securely connected to SBC.
- Check that the FAX phone wire is securely connected
- Go to the OF 17-1 FAX Entry RAP and check that the FAX settings are correct
- If the above checks are OK, replace the FAX PWB (PL 35.2).

320-327 RAP

Registers cannot be accessed on the Extended card

Procedure

Print a Configuration Sheet. **The Config Sheet indicates the Fax PWB is installed.**

Y **N**

Install a Fax PWB.

Check the following:

- Ensure the FAX is enabled
- Check that the FAX is securely connected to SBC.
- Check that the FAX phone wire is securely connected
- Go to the OF 17-1 FAX Entry RAP and check that the FAX settings are correct
- If the above checks are OK, replace the FAX PWB (PL 35.2).

320-331 RAP

No comms via PSTN1 port

Procedure

Print a Configuration Sheet. **The Config Sheet indicates the Fax PWB is installed.**

Y **N**

Install a Fax PWB.

Check the following:

- Ensure the FAX is enabled
- Check that the FAX is securely connected to SBC.
- Check that the FAX phone wire is securely connected
- Go to the OF 17-1 FAX Entry RAP and check that the FAX settings are correct
- If the above checks are OK, replace the FAX PWB (PL 35.2).

320-332 RAP

No comms via PSTN2 port

Procedure

Print a Configuration Sheet. **The Config Sheet indicates the Fax PWB is installed.**

Y **N**

Install a Fax PWB.

Check the following:

- Ensure the FAX is enabled
- Check that the FAX is securely connected to SBC.
- Check that the FAX phone wire is securely connected
- Go to the OF 17-1 FAX Entry RAP and check that the FAX settings are correct
- If the above checks are OK, replace the FAX PWB (PL 35.2).

320-338 RAP Fax Communication Fault

Fax communication error at power up or re-boot; power on self test (POST) failure.

Procedure

Power the machine off and on. If the problem continues, go to OF 17-1 FAX Entry RAP

320-339 RAP

Basic Card problem

Procedure

Print a Configuration Sheet. **The Config Sheet indicates the Fax PWB is installed.**

Y **N**

Install a Fax PWB.

Check the following:

- Ensure the FAX is enabled
- Check that the FAX is securely connected to SBC.
- Check that the FAX phone wire is securely connected
- Go to the OF 17-1 FAX Entry RAP and check that the FAX settings are correct
- If the above checks are OK, replace the FAX PWB (PL 35.2).

320-340 RAP

Extended Card Problem

Procedure

Print a Configuration Sheet. **The Config Sheet indicates the Fax PWB is installed.**

Y **N**

Install a Fax PWB.

Check the following:

- Ensure the FAX is enabled
- Check that the FAX is securely connected to SBC.
- Check that the FAX phone wire is securely connected
- Go to the OF 17-1 FAX Entry RAP and check that the FAX settings are correct
- If the above checks are OK, replace the FAX PWB (PL 35.2).

320-341 RAP

Miscellaneous Basic Card problems

Procedure

Print a Configuration Sheet. **The Config Sheet indicates the Fax PWB is installed.**

Y **N**

Install a Fax PWB.

Check the following:

- Ensure the FAX is enabled
- Check that the FAX is securely connected to SBC.
- Check that the FAX phone wire is securely connected
- Go to the OF 17-1 FAX Entry RAP and check that the FAX settings are correct
- If the above checks are OK, replace the FAX PWB (PL 35.2).

320-342 RAP

Error accessing file on a NV device

Procedure

Print a Configuration Sheet. **The Config Sheet indicates the Fax PWB is installed.**

Y **N**

Install a Fax PWB.

Check the following:

- Ensure the FAX is enabled
- Check that the FAX is securely connected to SBC.
- Check that the FAX phone wire is securely connected
- Go to the OF 17-1 FAX Entry RAP and check that the FAX settings are correct
- If the above checks are OK, replace the FAX PWB (PL 35.2).

320-701 RAP

Phonebook download failed

Procedure

Print a Configuration Sheet. **The Config Sheet indicates the Fax PWB is installed.**

Y **N**

Install Fax PWB.

Check the following:

- Ensure the FAX is enabled
- Check that the FAX is securely connected to SBC.
- Check that the FAX phone wire is securely connected
- Go to the OF 17-1 FAX Entry RAP and check that the FAX settings are correct
- If the above checks are OK, replace the FAX PWB (PL 35.2).

322-300-05 RAP

Image Complete not Received from Video

Procedure

Switch the power off then on.

322-300-10 RAP

Failed to transfer image do to decoding error. (EORERROR, HUFFMANERROR, BYTECOUNTERROR)

Procedure

Switch the power off then on.

322-300-16 RAP

When machine determines that it needs to do a reset in order to avoid an impending real time clock overflow

Procedure

Switch the power off then on.

322-301 RAP

Scan resources not available

Procedure

Switch the power off then on.

322-309 RAP

Consecutive no accepts received from a module exceeds threshold value (currently 20).

Five consecutive 22-309-04 will cause 22-319-04.

Procedure

Switch the power off then on.

Allow five minutes for fault recovery.

322-310 RAP

Pages received from Extended Job Service out of Sequence

Procedure

Check that originals are not jammed in DADF. Verify DADF operation with media used by customer. Re-sort and reload ALL originals in the document feeder.

322-311 RAP

Sequencer did not respond with proposal within the required time

Procedure

Switch the power off then on.

322-315 RAP

One or more modules did not respond with completion message

Procedure

Switch the power off then on.

322-316 RAP

One or more modules did not respond with completion message

Procedure

Switch the power off then on.

322-317 RAP

Job requires finishing capability that does not exist

Procedure

Switch the power off then on.

322-318 RAP

Job requires an IOT capability that does not exist

Procedure

Switch the power off then on.

322-320 RAP

SM Failed to install scan to file

Procedure

Switch the power off then on.

322-321 RAP

SM Failed to remove Scan to file

Procedure

Switch the power off then on.

322-321-04 RAP

Proposal Response Time Out Error

Procedure

Switch the power off then on.

322-322 RAP

SM Failed to install Lan FAX

Procedure

Switch the power off then on.

322-323 RAP

SM Failed to remove LAN FAX

Procedure

Switch the power off then on.

322-324 RAP

SM Failed to install Scan to E-mail

Procedure

Switch the power off then on.

322-325 RAP

SM Failed to remove Scan to E-mail.

Procedure

Switch the power off then on.

322-326 RAP

SM Failed to install IFAX

Procedure

Switch the power off then on.

322-327 RAP

SM Failed to install IFAX

Procedure

Switch the power off then on.

322-330-01 RAP

List Jobs Request Timed out between UI and CCS

Procedure

Switch the power off then on.

322-330-02 RAP

List Jobs Request Timed out between CCS and ESS Print Service

Procedure

Switch the power off then on.

322-330-03 RAP

List Jobs Request Timed out between CCS and Scan to File Service

Procedure

Switch the power off then on.

322-330-04 RAP

List Jobs Request Timed out between CCS and Scan To Fax Service

Procedure

Switch the power off then on.

322-330-05 RAP

List Jobs Request Timed out between Queue Utility and DC Job Services

Procedure

Switch the power off then on.

322-330-06 RAP

ESS Scan to Distribution Service not responding to List Jobs RPC call

Procedure

Switch the power off then on.

322-335 RAP

SM Failed to install Job Based Accounting

Procedure

Switch the power off then on.

322-336 RAP

SM Failed to remove Job Based Accounting

Procedure

Switch the power off then on.

322-337 RAP

SM Failed to install disk overwrite

Procedure

Switch the power off then on.

322-338 RAP

SM Failed to remove Disk Overwrite

Procedure

Switch the power off then on.

322-339 RAP

SM Failed to install Job Overwrite

Procedure

Switch the power off then on.

322-340 RAP

SM Failed to remove Job Overwrite

Procedure

Switch the power off then on.

322-350-1 RAP

Software detects non-valid Xerox SIM

Procedure

There is a serial number problem, a copyright problem, or a SIM problem. Try reinstalling the feature using the SIM located in the Tray 2 compartment on the right side of the tray. If the problem continues, call service support for corrective actions.

322-350-2 RAP

Software detects non-valid Xerox SIM

Procedure

There is a serial number problem, a copyright problem, or SIM problem. Try reinstalling the feature using the SIM located in the Tray 2 compartment on the right side of the tray. If the problem continues, call service support for corrective actions.

322-351-1 RAP

SIM Write Failure

Procedure

There is a serial number problem, a copyright problem, or SIM problem. Try reinstalling the feature using the SIM located in the Tray 2 compartment on the right side of the tray. If the problem continues, call service support for corrective actions.

322-351-2 RAP

SIM Write Failure

Procedure

There is a serial number problem, a copyright problem, or SIM problem. Try reinstalling the feature using the SIM located in the Tray 2 compartment on the right side of the tray. If the problem continues, call service support for corrective actions.

322-351-3 RAP

SIM Write Failure

Procedure

There is a serial number problem, a copyright problem, or SIM problem. Try reinstalling the feature using the SIM located in the Tray 2 compartment on the right side of the tray. If the problem continues, call service support for corrective actions.

322-352 RAP

Serial Number Update Required.

Initial Actions

Confirm that the machine serial number displayed on the UI (select **Machine Status**, **Machine Information Screen**) or the Configuration Sheet (if the UI is unavailable), and the serial number on the label on machine frame match. If they do not match please notify the FE/NTS.

Make sure PWBs and PJ connectors among IOT Drive, MCU, SBC, UI, and IIT are seated properly

Check dC122 for Communications faults (Chain 303). These can prevent serial number synchronization and must be addressed before proceeding

Enter diagnostics and select **Clear Counters,** Exit and Reboot at Service exit and exit diagnostics.

Have new SBC NVM PWB, MCU NVM PWB, and IIT/IPS PWB available before trouble shooting problem.

CAUTION

Do not swap NVM PWBs, or the IIT/IPS PWB between Machines.

CAUTION

Do not remove the batteries from any PWBs while making voltage checks in this RAP.

CAUTION

If any of the billing data PWBs is to be replaced (SBC NVM PWB, MCU NVM PWB, IIT/IPS PWB) replace them one PWB at a time, as directed in this procedure. Replacing them all at the same time will cause unrecoverable NVM corruption.

If failure persists, wait 12 minutes before powering off / powering on the machine.

Procedure

Check the serial numbers on the UI (select **Machine Status**, **Machine Information Screen**) against the label on the machine frame and the Configuration Report. **The serial numbers match.**

Y **N**

Power off the machine and disconnect the power cord. Contact the field engineer (RSE)/ NTS immediately.

More than one of the following PWBs have been replaced at the same time: SBC NVM PWB, MCU NVM PWB, IIT/IPS PWB.

Y **N**

Install the original PWB back into the machine, and reboot the machine. **The 322-352 Fault Code is still present.**

Y **N**

If any other fault codes exist, go to the specific RAP for that fault code. Otherwise, go to Call Flow.

Perform the following steps in the order indicated:

- Reseat P/J 407 on the MCU PWB.

A

A

- Reseat the wire harness between the IIT PWB and SBC PWB.
- Reseat each board and connectors on the MCU PWB, MCU NVM PWB, SBC PWB, SBC NVM PWB and the cables between the IIT PWB and the SBC Module.
- Check for + 3.3 VDC between B2 (red) and B1 (black) at P/J 707 on the MCU PWB. If the voltage is not within specification, go to the 303-316 RAP.
- Check for + 3.3 VDC between B2 (red) and B1 (black) at P/J 407 on the MCU PWB. If the voltage is not within specification, go to the 362-310 RAP.

The original boards are still available.

Y N

Use dC132 to restore serial number and billing data integrity using the Serial Number Reinitialization Request Form.

NOTE: *It may take up to 24 hours to receive a password from ACAST*

Install the original PWBs back into the machine, and perform the following steps in the order indicated:

- Reseat P/J 407 on the MCU PWB.
- Reseat the wire harness between the IIT PWB and SBC PWB.
- Reseat each board and connectors on the MCU PWB, MCU NVM PWB, SBC PWB, SBC NVM PWB and the cables between the IIT PWB and the SBC Module.
- Check for + 3.3 VDC between B2 (red) and B1 (black) at P/J 707 on the MCU PWB. If the voltage is not within specification, go to the 303-316 RAP.
- Check for + 3.3 VDC between B2 (red) and B1 (black) at P/J 407 on the MCU PWB. If the voltage is not within specification, go to the 362-310.

The fault code 322-352 is still present.

Y N

If other fault codes are present, go to the specific fault code RAP. If no other fault codes exist, go to Call Flow.

The red light on the MCU PWB is flashing.

Y N

Perform each activity until the fault is cleared.

- Replace the SBC PWB (PL 35.2). Have the MC load the latest software, and power on the machine.
- Replace the MCU NVM PWB (PL 18.2A-7525/30/35, PL 18.2B-7545/56). Have the MC load the latest software and power on the machine.
- Replace the IIT/IPS PWB (PL 1.8). Have the MC load the latest software, and power on the machine.
- Enter Diagnostics and refresh the screen at dC120 , and dC122 .

Other fault codes are present.

Y N

Go to Call Flow.

Go to the particular fault code RAP. If, after completing any remaining fault code RAPs, the 322-352 fault code is still present, repeat the 322-352 Rap one time. If the fault code still remains, contact the CTS, FE(RSE) or NTS for assistance.

B

Replace the MCU NVM PWB (PL 18.2A-7525/30/35, PL 18.2B-7545/56) and have the MC load the latest software. If the fault code remains, contact the CTS, FE(RSE) or NTS for assistance.

B

322-352-1 RAP

Serial Update Required

NOTE: *Password required to write serial number to the IOT and SBC*

Procedure

Contact service support to perform a dC132 .

322-370 RAP

XSA communication lost

Procedure

Switch machine power off then on. Check network connections to XSA server and have System Administrator check configuration for XSA refer to System Administrator Guide.

322-372 RAP

Fax Service can not un-register.

Procedure

If the Fax Card was removed from the machine, switch machine power off and then on.

If the Fax Card is installed, go to OF 17-1 FAX Entry RAP.

322-407 RAP

SM Failed To Install Embedded Fax

Procedure

Switch machine power off then on. If problem still exists reseat Fax PWB.

322-417 RAP

SM Failed To Removal Embedded Fax

Procedure

Switch machine power off then on.

322-419 RAP

SM Failed To Enable Embedded Fax

Procedure

1. Switch machine power off then on.
2. Check Configuration Report, under Installed Options ensure Embedded Fax is installed (machine recognizes Fax Card). If the Embedded Fax does not show as installed on Configuration Report, switch off machine power and reseat the Fax Card (PL 35.2).
3. Switch on machine power and check the Configuration Report to see if the machine recognizes the Fax Card is installed and enabled. If enabled, return to Service Call Procedures. If not, continue with this RAP.
4. Check that Network Server Fax is disabled. Server Fax and Embedded Fax cannot be enabled at the same time.
5. Enter Tools mode GP 2 . Select **User Interface Settings** and **Service Enablements**.
6. Select **Server Fax** and ensure Server Fax is disabled. If not, select **Disable and Save**.
7. Select **Embedded Fax,** enable Embedded Fax.
8. If problem still exists replace Fax Card (PL 35.2) .
9. If problem still exists contact Service Support for assistance.

322-421 RAP

SM Failed To Disable Embedded Fax.

Procedure

1. Switch machine power off then on.
2. Check Configuration Report, under installed Options see if Embedded Fax is disabled.
3. If not, Enter Tools Mode GP 2 . Select **User Interface Settings** and **Service Enablements**.
4. Select Embedded Fax and select the **Disabled** button and **Save**.
5. Print a Configuration Report. Check report, Embedded Fax should now be disabled.
6. If disabled, return to Service Call Procedures.
7. If still enabled remove Fax Card from machine if it is still present PL 35.2 .
8. Check new Configuration Report to ensure Embedded Fax is disabled.
9. If still enabled contact Service Support for assistance.

322-701-04 RAP

Module completion message received after IOT returned to standby

Procedure

Switch the power off then on.

322-750-04 RAP

Output Device Configuration Mismatch

Procedure

Check output device connections.

322-750-17 RAP

Accessory Card Configuration Mismatch

Procedure

Check output device connections.

322-751-04 RAP

Paper Tray Configuration Mismatch

Procedure

Switch the power off then on.

322-754-17 RAP

When the System detects the UI Configuration has changed during the Power On Sequence

Procedure

Switch the power off then on.

322-755-17 RAP

RDT Configuration Mismatch

Procedure

Check Output device connections.

341-316 IH Driver Interface Fault

BSD-ON:BSD 10.3 Fusing Heat Control (1 of 3)

Interface error between the MCU PWB and the IH Driver has occurred (at the IH Driver).

NOTE: *When turning the power OFF, turn OFF the Power Switch first and then the Main Power Switch.*

Cause/Action

1. Turn the power OFF and check the connection between the IH Driver J530 and the MCU PWB J414 for open circuit, short circuit, and poor contact.

   If no problems are found, replace the following parts in sequence:

   - IH Driver (PL 18.3)
   - MCU PWB (7525/30/35) (PL 18.2A)
   - MCU PWB (7545/56) (PL 18.2B)

341-317 MCU IH Interface Fault

BSD-ON:BSD 10.3 Fusing Heat Control (1 of 3)

Interface error between the MCU PWB and the IH Driver has occurred (at the MCU).

NOTE: *When turning the power OFF, turn OFF the Power Switch first and then the Main Power Switch.*

Cause/Action

1. Turn the power OFF and check the connection between the MCU PWB J414 and the IH Driver J530 for open circuit, short circuit, and poor contact.

   If no problems are found, replace the following parts in sequence:

   - MCU PWB (7525/30/35) (PL 18.2A)
   - MCU PWB (7545/56) (PL 18.2B)
   - IH Driver (PL 18.3)

341-325 MCU PWB F2 Open

BSD-ON:BSD 1.6 DC Power Generation (3 of 4)

Fuse 2 on the MCU PWB has blown.

CAUTION

You must remove the cause of Fuse meltdown before replacing the MD PWB or replacement PWB will be damaged.

NOTE: *When turning the power OFF, turn OFF the Power Switch first and then the Main Power Switch.*

Cause/Action

There is a short circuit or excessive mechanical load in one of the.following components or a short circuit in the wiring from the component to the MD PWB:

- Suction Fan (7525/30/35: PL 18.2A; 7545/56: PL 18.2B) - Go to the BSD 9.45 Suction/M/Bottom Fan Control (7545,7556) and check the +24VDC wiring for a short circuit from P/J417 on the MCU PWB to P/J231.
- Bottom Fan (7525/30/35) (PL 4.3A) - Go to the BSD 9.42 Drive/HVPS/Bottom Fan (7525,7530,7535) and check the +24VDC wiring for a short circuit from P/J417 on the MCU PWB to P/J234.
- Bottom Fan (7545/56) (PL 4.3B) - Go to the BSD 9.45 Suction/M/Bottom Fan Control (7545,7556) and check the +24VDC wiring from P/J417 on the MCU PWB to P/J234.
- HVPS Fan (7525/30/35) (PL 4.3A) - Go to the BSD 9.42 Drive/HVPS/Bottom Fan (7525,7530,7535) and check the +24VDC wiring from P/J417 on the MCU PWB to P/J235.
- M Fan (7545/56) (PL 4.3B) - Go to the BSD 9.45 Suction/M/Bottom Fan Control (7545,7556) and check the +24VDC wiring from P/J417 on the MCU PWB to P/J235.
- 1st BTR Contact Retract Clutch (PL 3.2) - Go to the +24VDC-1 Wirenet and check the +24VDC wiring from P/J417 on the MCU PWB to P/J250.
- Takeaway Clutch (7525/30/35) (PL 15.1) - Go to the +24VDC-1 Wirenet and check the +24VDC wiring from P/J417 on the MCU PWB to P/J261.

If the wiring and components are OK, turn the power OFF and replace the MCU PWB:

- MCU PWB (7525/30/35) (PL 18.2A)
- MCU PWB (7545/56) (PL 18.2B)

341-326 MCU PWB F3 Open

BSD-ON:BSD 1.6 DC Power Generation (3 of 4)

Fuse 3 on the MCU PWB has blown.

CAUTION

You must remove the cause of Fuse meltdown before replacing the MD PWB or replacement PWB will be damaged.

NOTE: *When turning the power OFF, turn OFF the Power Switch first and then the Main Power Switch.*

Cause/Action

There is a short circuit or excessive mechanical load in one of the.following components or a short circuit in the wiring from the component to the MD PWB:

- IH Exhaust Fan (7525/30/35: PL 4.3A; 7545/56: PL 4.3B) - Go to the BSD 10.3 Fusing Heat Control (1 of 2) and check the +24VDC wiring from P/J414 on the MCU PWB to P/J225.
- Process 2 Fan (7525/30/35) (PL 4.2A) - Go to the BSD 9.41 IBT/Process Fan Control (7525,7530,7535) and check the +24VDC wiring from P/J416 on the MCU PWB to P/J238.
- Process 2 Fan (7545/56) (PL 4.2B) - Go to the BSD 9.43 Process Fan Control (7545,7556) and check the +24VDC wiring from P/J416 on the MCU PWB to P/J238.
- Erase Lamp Unit (Y, M, C, K) (PL 8.1) - Go to the BSD 9.37 Drum Cleaning (Y,M) and check the +24VDC wiring from P/J411 on the MCU PWB to P/J210 (Y) and P/J211 (M); go to BSD 9.38 Drum Cleaning (C,K) and check the +24VDC wiring from P/J411 on the MCU PWB to P/J212 (C) and P/J213 (K).
- MOB ADC Assembly (PL 18.5) - Go to the +24VDC-1 Wirenet and check the +24VDC wiring from P/J415 on the MCU PWB to P/J610.

If the wiring and components are OK, turn the power OFF and replace the MCU PWB:

- MCU PWB (7525/30/35) (PL 18.2A)
- MCU PWB (7545/56) (PL 18.2B)

341-327 MCU PWB F4 Open

BSD-ON:BSD 1.11 Power Interlock Switching (2 of 2)

Fuse 4 on the MCU PWB has blown.

CAUTION

You must remove the cause of Fuse meltdown before replacing the MD PWB or replacement PWB will be damaged.

NOTE: *When turning the power OFF, turn OFF the Power Switch first and then the Main Power Switch.*

Cause/Action

There is a short circuit or excessive mechanical load in one of the.following components or a short circuit in the wiring from the component to the MD PWB:

- IBT Fan 1, 2 (7525/30/35) (PL 4.3A) - Go to the BSD 9.41 IBT/Process Fan Control (7525,7530,7535) and check the +24VDC wiring from P/J416 on the MCU PWB to P/J232.
- C Fan (7545/56) (PL 4.2B) - Go to the BSD 9.44 C Fan Control (7545,7556) and check the +24VDC wiring from P/J416 on the MCU PWB to P/J619.

If the wiring and components are OK, turn the power OFF and replace the MCU PWB:

- MCU PWB (7525/30/35) (PL 18.2A)
- MCU PWB (7545/56) (PL 18.2B)

341-328 MCU PWB F5 Open

BSD-ON:BSD 1.11 Power Interlock Switching (2 of 2)

Fuse 5 on the MCU PWB has blown.

CAUTION

You must remove the cause of Fuse meltdown before replacing the MD PWB or replacement PWB will be damaged.

NOTE: *When turning the power OFF, turn OFF the Power Switch first and then the Main Power Switch.*

Cause/Action

There is a short circuit or excessive mechanical load in one of the.following components or a short circuit in the wiring from the component to the MD PWB:

- HVPS (1st/2nd/DTC) (PL 6.2) - Go to the +24VDC-3 Wirenet and check the +24VDC wiring for a short circuit from P/J414 on the MCU PWB to P/J461.
- HVPS (Dev/BCR) (7525/30/35) (PL 18.6A) - Go to the +24VDC-3 Wirenet and check the +24VDC wiring for a short circuit from P/J412 on the MCU PWB to P/J460.
- HVPS (BCR) (7545/56) (PL 18.2B) - Go to the +24VDC-3 Wirenet and check the +24VDC wiring for a short circuit from P/J412 on the MCU PWB to P/J513.
- HVPS (Dev) (7545/56) (PL 5.3) - Go to the +24VDC-3 Wirenet and check the +24VDC wiring for a short circuit from P/J412 on the MCU PWB to P/J514.

If the wiring and components are OK, turn the power OFF and replace the MCU PWB:

- MCU PWB (7525/30/35) (PL 18.2A)
- MCU PWB (7545/56) (PL 18.2B)

341-340 MCU NVM (EEPROM) Data Fault

BSD-ON:Chain 3 BSDs

The specific values of the NVM (EEPROM) data are not in their specified addresses.

NOTE: *When turning the power OFF, turn OFF the Power Switch first and then the Main Power Switch.*

Cause/Action

1. Turn the power OFF and ON.
2. Install the correct version of the IOT firmware.
3. Initialize the IOT NVM (includes writing back the adjustment NVM). If the problem persists, replace the MCU PWB.
   - MCU PWB (7525/30/35) (PL 18.2A)
   - MCU PWB (7545/56) (PL 18.2B)

341-341 MCU NVM (EEPROM) Access Fault

BSD-ON:Chain 3 BSDs

NVM (EEPROM) access error (The read values are different from those that were written, or there is I2C communication error).

NOTE: *When turning the power OFF, turn OFF the Power Switch first and then the Main Power Switch.*

Cause/Action

1. Turn the power OFF and check whether there is poor connection between the EEPROM and the MCU PWB.

   If no problems are found, replace the MCU PWB.
   - MCU PWB (7525/30/35) (PL 18.2A)
   - MCU PWB (7545/56) (PL 18.2B)

341-342 MCU NVM (EEPROM) Buffer Fault

BSD-ON:Chain 3 BSDs

NVM (EEPROM) buffer Fault (The write buffer has overflowed).

NOTE: *When turning the power OFF, turn OFF the Power Switch first and then the Main Power Switch.*

Cause/Action

1. Turn the power OFF and check whether there is poor connection between the EEPROM and the MCU PWB.

   If no problems are found, replace the MCU PWB.
   - MCU PWB (7525/30/35) (PL 18.2A)
   - MCU PWB (7545/56) (PL 18.2B)

341-343 IM Logic Fault

BSD-ON:BSD 3.1 PWB Communication (1 of 7)

The IM software control error was detected.

NOTE: *When turning the power OFF, turn OFF the Power Switch first and then the Main Power Switch.*

Cause/Action

1. Turn the power OFF and ON.
2. Install the correct version of the IOT firmware.

   NOTE: *Ensure software version 32.42.0 or higher is loaded on the Professional Finisher. This is part of the software file 61.120.200.3501 which can be found on GSN Library 11428.*

   a. Load the software using the Altboot, Forced Upgrade method shown in GP 9.
   b. After upgrading software, enter diagnostics.
   c. Go to dC301.
   d. Select Copier on the left, Finisher in the middle, and All on the right.
   e. Select Initialize.
   f. Exit Diagnostic.
3. Verify the following NVM's based on the Finisher:

   763-001 Output Device Configuration

   0 - Offset Catch Tray (OCT)

   3- Finisher without Booklet Maker (Advanced Finisher)

   4 - Finisher with Booklet Maker (Professional Finisher)

   763-011 Hole Punch Configuration

   0 - No Hole Punch

   3 - 3 Hole Punch for XC (USA, Canada)

   5 - 2, 4 Hole Punch for XE (Europe)
4. Initialize the IOT NVM (includes writing back the adjustment NVM). If the problem persists, replace the MCU PWB.
   - MCU PWB (7525/30/35) (PL 18.2A)
   - MCU PWB (7545/56) (PL 18.2B)

341-345 MD PWB F2 Open

BSD-ON:+5VDC-2 Wirenet

Fuse 2 on the MD PWB has blown.

CAUTION

You must remove the cause of Fuse meltdown before replacing the MD PWB or replacement PWB will be damaged.

NOTE: *When turning the power OFF, turn OFF the Power Switch first and then the Main Power Switch.*

Cause/Action

There is a short circuit in one of the.following components or a short circuit in the wiring from the component to the MD PWB:

- LPH Unit (Y, M, C, K) (PL 2.1)
- LPH Rear PWB (Y, M, C, K) (PL 2.2)

Go to the +5VDC-2 Wirenet and check the +5VDC wiring from P/J532 on the MD PWB to P/J581, P/J580, P/J579, and P/J578.

If a short circuit is detected, remove each of the LPH Units (Y, M, C, K) in turn (REP 9.10) to isolate the fault and repair or replace, as required.

If the wiring and components are OK, turn the power OFF and replace the MD PWB:

- MD PWB (7525/30/35) (PL 18.2A)
- MD PWB (7545/56) (PL 18.2B)

341-346 (7525/30/35) MD PWB F3 Open

BSD-ON:BSD 1.6 DC Power Generation (3 of 4)

Fuse 3 on the MD PWB has blown.

CAUTION

You must remove the cause of Fuse meltdown before replacing the MD PWB or replacement PWB will be damaged.

NOTE: *When turning the power OFF, turn OFF the Power Switch first and then the Main Power Switch.*

Cause/Action

There is a short circuit in one of the.following components or a short circuit in the wiring from the component to the MD PWB, or a possible short or mechanical overloading in the +24VDC distribution from the Tray Module PWB (3T/TT) or the HCF PWB.

- Tray Module PWB (PL 10.9) - Go to the +24VDC-2 Wirenet and check the +24VDC wiring for a short circuit from P/J592 on the MD PWB to P/J541 (3T Module) or P/J541 (TT Module).

  Check for blown fuses on the Tray Module PWB and check for a short in the +24VDC distribution for the blown fuse (+24VDC-4 Wirenet); also, check for an excessive mechanical load on the associated Tray Module components.
- HCF PWB (PL 28.8) - Go to the HCF +24VDC Wirenet and check the +24 VDC wiring from P/J593 on the MD PWB to PF/JF04.

  If the wiring is OK and Fuse F1 is OK on the HCF PWB, replace the MD PWB:
  - MD PWB (7525/30/35) (PL 18.2A)
  - MD PWB (7545/56) (PL 18.2B)

  If Fuse F1 on the HCF PWB is blown, check for blown fuses on the HCF PWB and check for a short in the +24VDC distribution for the blown fuse (HCF +24VDC Wirenet); also, check for an excessive mechanical load on the associated HCF components.

  Check the +24VDC wiring and HCF Top Cover Interlock Switch (PL 28.7) for a short between PF/JF05, pins 1 and 2.

  If the HCF wiring and components are OK, turn the power OFF and replace the HCF PWB (PL 28.8).

If the problem still exists, replace the following parts in sequence:

- Tray Module PWB (PL 10.9)
- HCF PWB (PL 28.8)

341-347 Serial I/O Fault

BSD-ON:Chain 3 BSDs

The Serial I/O control clock is not input into the MD PWB.

NOTE: *When turning the power OFF, turn OFF the Power Switch first and then the Main Power Switch.*

Cause/Action

1. Turn the power OFF and check the connector (P/J452) between the MD PWB and the MCU PWB for poor connection.

   If no problems are found, replace the following parts in sequence:

   - MCU PWB (7525/30/35) (PL 18.2A)
   - MCU PWB (7545/56) (PL 18.2B)
   - MD PWB (7525/30/35) (PL 18.2A)
   - MD PWB (7545/56) (PL 18.2B)

341-348 (7545/56) MD PWB F4 Open

BSD-ON:BSD 1.6 DC Power Generation (3 of 4)

Fuse 4 on the MD PWB has blown.

CAUTION

You must remove the cause of Fuse meltdown before replacing the MD PWB or replacement PWB will be damaged.

NOTE: *When turning the power OFF, turn OFF the Power Switch first and then the Main Power Switch.*

Cause/Action

There is a short circuit in one of the.following components or a short circuit in the wiring from the component to the MD PWB, or a possible short or mechanical overloading in the +24VDC distribution from the Tray Module PWB (3T/TT) or the HCF PWB.

- Tray Module PWB (PL 10.9) - Go to the +24VDC-2 Wirenet and check the +24VDC wiring for a short circuit from P/J592 on the MD PWB to P/J541 (3T Module) or P/J541 (TT Module).

  Check for blown fuses on the Tray Module PWB and check for a short in the +24VDC distribution for the blown fuse (+24VDC-4 Wirenet); also, check for an excessive mechanical load on the associated Tray Module components.
- HCF PWB (PL 28.8) - Go to the HCF +24VDC Wirenet and check the +24 VDC wiring from P/J593 on the MD PWB to PF/JF04.

  If the wiring is OK and Fuse F1 is OK on the HCF PWB, replace the MD PWB:

  – MD PWB (7525/30/35) (PL 18.2A)

  – MD PWB (7545/56) (PL 18.2B)

  If Fuse F1 on the HCF PWB is blown, check for blown fuses on the HCF PWB and check for a short in the +24VDC distribution for the blown fuse (HCF +24VDC Wirenet); also, check for an excessive mechanical load on the associated HCF components.

  Check the +24VDC wiring and HCF Top Cover Interlock Switch (PL 28.7) for a short between PF/JF05, pins 1 and 2.

  If the HCF wiring and components are OK, turn the power OFF and replace the HCF PWB (PL 28.8).

If the problem still exists, replace the following parts in sequence:

- Tray Module PWB (PL 10.9)
- HCF PWB (PL 28.8)

341-349 MD PWB F6 Open

BSD-ON:BSD 1.6 DC Power Generation (3 of 4)

Fuse 6 on the MD PWB has blown.

CAUTION

You must remove the cause of Fuse meltdown before replacing the MD PWB or replacement PWB will be damaged.

NOTE: *When turning the power OFF, turn OFF the Power Switch first and then the Main Power Switch.*

Cause/Action

There is a short circuit or excessive mechanical load in one of the.following components or a short circuit in the wiring from the component to the MD PWB:

- Takeaway Motor (7545/56) (PL 15.1) - Check the +24VDC wiring from P/J592 on the MD PWB (+24VDC-2 Wirenet) to P/J541 (3T Module) or P/J541 (TT Module) on the Tray Module PWB (+24VDC-4 Wirenet).
- Tray 1 Feed/Lift Up Motor (PL 9.4) - Go to the BSD 7.6 Tray 1 Paper Stacking and check the +24VDC wiring from P/J528 on the MD PWB to P/J268.
- P/R Latch Motor (PL 7.1) - Go to the BSD 10.2 Fuser Drive Control (2 of 2) and check the +24VDC wiring from P/J524 on the MD PWB to P/J254.
- Agitator Motor (PL 8.2) - Go to the BSD 9.40 Waste Toner Disposal and check the +24VDC wiring from P/J529 on the MD PWB to P/J215.

If the wiring and components are OK, turn the power OFF and replace the MD PWB:

- MD PWB (7525/30/35) (PL 18.2A)
- MD PWB (7545/56) (PL 18.2B)

If the fuse blows again, replace the Tray Module PWB (PL 10.9).

341-350 MD PWB F7 Open

BSD-ON:BSD 1.6 DC Power Generation (3 of 4)

Fuse 7 on the MD PWB has blown.

CAUTION

You must remove the cause of Fuse meltdown before replacing the MD PWB or replacement PWB will be damaged.

NOTE: *When turning the power OFF, turn OFF the Power Switch first and then the Main Power Switch.*

Cause/Action

There is a short circuit or excessive mechanical load in the following component or a short circuit in the wiring from the component to the MD PWB:

- Fuser Fan (PL 4.1) - Go to the BSD 10.6 Fusing and check the +24VDC wiring from P/J524 on the MD PWB to P/J230.
- Front LVPS Fan (PL 4.1) - Go to the BSD 1.3 LVPS Control and check the +24VDC wiring from P/J529 on the MD PWB to P/J239.
- IH Intake Fan (PL 4.1) - Go to the BSD 10.3 Fusing Heat Control (1 of 2) and check the +24 VDC wiring from P/J529 on the MD PWB to P/J226.
- C Exhaust Fan (7545/56) (PL 4.3B) - Go to the BSD 9.44 C Fan Control (7545,7556) and check the +24VDC wiring from P/J529 on the MD PWB to P/J227.
- Process 1 Fan (7545/56) (PL 4.2B) - Go to the BSD 9.43 Process Fan Control (7545,7556) and check the +24VDC wiring from P/J537 on the MD PWB to P/J528.

If the wiring and components are OK, turn the power OFF and replace the MD PWB:

- MD PWB (7525/30/35) (PL 18.2A)
- MD PWB (7545/56) (PL 18.2B)

341-351 MD Detect Fault

BSD-ON:BSD 3.8 PWBS Detection

The MD PWB is not installed.

NOTE: *When turning the power OFF, turn OFF the Power Switch first and then the Main Power Switch.*

Cause/Action

1. Turn the power OFF and check the connector (P/J452) between the MD PWB and the MCU PWB for poor connection.

   If no problems are found, replace the following parts in sequence:

   - MD PWB (7525/30/35) (PL 18.2A)
   - MD PWB (7545/56) (PL 18.2B)
   - MCU PWB (7525/30/35) (PL 18.2A)
   - MCU PWB (7545/56) (PL 18.2B)

341-352 (Int) MD PWB F5 Open

BSD-ON:BSD 12.1 Integrated Finisher DC Power and Interlock Switching

Fuse 5 on the MD PWB has blown.

CAUTION

You must remove the cause of Fuse meltdown before replacing the MD PWB or replacement PWB will be damaged.

NOTE: *When turning the power OFF, turn OFF the Power Switch first and then the Main Power Switch.*

Cause/Action

There is a short circuit in the following component or a short circuit in the wiring from the component to the MD PWB, or a possible short or mechanical overloading in the Finisher components or wiring to the Finisher PWB.

- Finisher PWB (PL 22.7) - Go to the Finisher (Int) +24VDC/24VDC RTN and check the +24VDC wiring from P/J591 on the MD PWB to P/J8703.

  If the wiring is OK and Fuse F1 is OK on the Finisher PWB, replace the MD PWB:

  – MD PWB (7525/30/35) (PL 18.2A)
  – MD PWB (7545/56) (PL 18.2B)

If Fuse F1 on the Finisher PWB is blown, check for blown Fuses F3, F4, F5, and F6 on the Finisher PWB and check for a short in the +24VDC distribution for the blown fuse (Finisher (Int) +24VDC/24VDC RTN); also, check for an excessive mechanical load on the associated Finisher components.

Check the +24VDC wiring and Interlock Switches for a short between P/J8702, pins 1 and 3.

Check Fuse F2 on the Finisher PWB and the +5VDC distribution for a short circuit (Finisher (Int) +24VDC/24VDC RTN).

If the wiring and components are OK, turn the power OFF and replace the Finisher PWB (PL 22.7).

341-353 MD PWB F8 Open

BSD-ON:BSD 1.11 Power Interlock Switching (2 of 2)

Fuse 8 on the MD PWB has blown.

CAUTION

You must remove the cause of Fuse meltdown before replacing the MD PWB or replacement PWB will be damaged.

NOTE: *When turning the power OFF, turn OFF the Power Switch first and then the Main Power Switch.*

Cause/Action

There is a short circuit or excessive mechanical load in one of the.following components or a short circuit in the wiring from the component to the MD PWB:

- MSI Feed/Nudger Motor (PL 13.2) - Go to the BSD 7.10 Tray 5 (MSI) Paper Stacking and check the +24VDC wiring from P/J525 on the MD PWB to P/J269.
- Exit 2 Drive Motor (PL 17.4) - Go to the BSD 10.10 Fused Paper Exit 2 (3 of 4) and check the +24VDC wiring from P/J522 on the MD PWB to P/J265.
- Duplex Motor (PL 14.5) - Go to the BSD 10.13 Duplex Transportation (2 of 2) and check the +24 VDC wiring from P/J523 on the MD PWB to P/J275.

If the wiring and components are OK, turn the power OFF and replace the MD PWB:

- MD PWB (7525/30/35) (PL 18.2A)
- MD PWB (7545/56) (PL 18.2B)

341-354 MD PWB F9 Open

BSD-ON:BSD 1.11 Power Interlock Switching (2 of 2)

Fuse 9 on the MD PWB has blown.

CAUTION

You must remove the cause of Fuse meltdown before replacing the MD PWB or replacement PWB will be damaged.

NOTE: *When turning the power OFF, turn OFF the Power Switch first and then the Main Power Switch.*

Cause/Action

There is a short circuit or excessive mechanical load in the following component or a short circuit in the wiring from the component to the MD PWB:

- Toner Dispense Motor (Y, M, C, K) (PL 5.1)

Go to the BSD 9.25 Toner Dispense Control (Y,M) and check the +24VDC wiring from P/J529 on the MD PWB to P/J220 and P/J221.

Go to the BSD 9.26 Toner Dispense Control (C,K) and check the wiring from P/J529 on the MD PWB to P/J222 and P/J223.

If the wiring and components are OK, turn the power OFF and replace the MD PWB:

- MD PWB (7525/30/35) (PL 18.2A)
- MD PWB (7545/56) (PL 18.2B)

341-355 MD PWB F10 Open

BSD-ON:+24VDC-3 Wirenet

Fuse 10 on the MD PWB has blown.

CAUTION

You must remove the cause of Fuse meltdown before replacing the MD PWB or replacement PWB will be damaged.

NOTE: *When turning the power OFF, turn OFF the Power Switch first and then the Main Power Switch.*

Cause/Action

There is a short circuit or excessive mechanical load in one of the.following components or a short circuit in the wiring from the component to the MD PWB:

- 2nd BTR Contact Retract Motor (PL 14.4)

  NOTE: *The LH Fan PWB (including the LH Fan) is an option to prevent paper blocking.*

- LH Fan PWB (option)

Go to the +24VDC-3 Wirenet and check the +24VDC wiring from P/J526 on the MD PWB to P/J240 and P/J248.

If the wiring and components are OK, turn the power OFF and replace the MD PWB.

- MD PWB (7525/30/35) (PL 18.2A)
- MD PWB (7545/56) (PL 18.2B)

341-356 MD PWB F11 Open

BSD-ON:+24VDC-3 Wirenet

Fuse 11 on the MD PWB has blown.

CAUTION

You must remove the cause of Fuse meltdown before replacing the MD PWB or replacement PWB will be damaged.

NOTE: *When turning the power OFF, turn OFF the Power Switch first and then the Main Power Switch.*

Cause/Action

There is a short circuit or excessive mechanical load in one of the.following components or a short circuit in the wiring from the component to the MD PWB:

- Fuser Drive Motor (PL 3.1)
- Main Drive Motor (PL 3.2)

Go to the +24VDC-3 Wirenet and check the +24VDC wiring from P/J535 on the MD PWB to P/J242 and P/J244.

If the wiring and components are OK, turn the power OFF and replace the MD PWB:

- MD PWB (7525/30/35) (PL 18.2A)
- MD PWB (7545/56) (PL 18.2B)

341-357 MD PWB F12 Open

BSD-ON:+24VDC-3 Wirenet

Fuse 12 on the MD PWB has blown.

CAUTION

You must remove the cause of Fuse meltdown before replacing the MD PWB or replacement PWB will be damaged.

NOTE: *When turning the power OFF, turn OFF the Power Switch first and then the Main Power Switch.*

Cause/Action

There is a short circuit or excessive mechanical load in one of the.following motors or a short circuit in the wiring from the motor(s) to the MD PWB:

- Drum/Dev Drive Motor (K) (7525/30/35) (REP 4.3)
- Drum/Dev Drive Motor (K) (7545/56) (REP 4.4)
- IBT Drive Motor Assembly (7525/30/35) (PL 3.3A)
- IBT Drive Motor Assembly (7545/56) (PL 3.3B)

Go to the +24VDC-3 Wirenet and check the +24VDC wiring from P/J526 on the MD PWB to P/J240 and P/J248. If the wires are OK, check the Drum/Developer Drive Assembly (PL 3.3A-7525/30/35) (7PL 3.3B - 7545/56) for a short circuit. Repair or replace as required.

If the wires and components are OK, turn the power OFF and replace the MD PWB.

- MD PWB (7525/30/35) (PL 18.2A)
- MD PWB (7545/56) (PL 18.2B)

341-358 MD PWB F13 Open

BSD-ON:+24VDC-3 Wirenet

Fuse 13 on the MD PWB has blown.

CAUTION

You must remove the cause of Fuse meltdown before replacing the MD PWB or replacement PWB will be damaged.

NOTE: *When turning the power OFF, turn OFF the Power Switch first and then the Main Power Switch.*

Cause/Action

There is a short circuit or excessive mechanical load in one of the.following motors or a short circuit in the wiring from the motor(s) to the MD PWB:

- Drum/Dev Drive Motor (Y, M, C) (7525/30/35) (REP 4.3)
- Drum Drive Motor (Y, M, C) (7545/56) (REP 4.4)
- Developer Drive Motor (Y, M, C) (7545/56) (REP 4.4)

Go to the +24VDC-3 Wirenet and check the +24VDC wiring from P/J526 on the MD PWB to P/J246 and P/J251. If the wires are OK, check the Drum/Developer Drive Assembly (PL 3.3A-7525/30/35) (PL 3.3B - 7545/56) for a short circuit. Repair or replace as required.

If the wires and components are OK, turn the power OFF and replace the MD PWB.

- MD PWB (7525/30/35) (PL 18.2A)
- MD PWB (7545/56) (PL 18.2B)

341-359 MD PWB F14 Open

BSD-ON:+24VDC-3 Wirenet

Fuse 14 on the MD PWB has blown.

CAUTION

You must remove the cause of Fuse meltdown before replacing the MD PWB or replacement PWB will be damaged.

NOTE: *When turning the power OFF, turn OFF the Power Switch first and then the Main Power Switch..*

Cause/Action

There is a short circuit or excessive mechanical load in one of the.following components or a short circuit in the wiring from the component(s) to the MD PWB:

- Face Up Gate Solenoid (PL 17.5)
- Exit 1 OCT Motor (PL 17.2)

Go to the +24VDC-3 Wirenet and check the +24VDC wiring from:

- P/J522 on the MD PWB to P/J263
- P/J524 on the MD PWB to P/J271

If the wires and components are OK, turn the power OFF and replace the MD PWB.

- MD PWB (7525/30/35) (PL 18.2A)
- MD PWB (7545/56) (PL 18.2B)

341-360 MD PWB F15 Open

BSD-ON:+24VDC-3 Wirenet

Fuse 15 on the MD PWB has blown.

CAUTION

You must remove the cause of Fuse meltdown before replacing the MD PWB or replacement PWB will be damaged.

NOTE: *When turning the power OFF, turn OFF the Power Switch first and then the Main Power Switch.*

Cause/Action

There is a short circuit or excessive mechanical load in one of the.following components or a short circuit in the wiring from the component(s) to the MD PWB:

- Exit 2 Gate Solenoid (PL 17.5)
- Exit 2 OCT Motor (PL 17.5)

Go to the +24VDC-3 Wirenet and check the +24VDC wiring from P/J522 on the MD PWB to P/J262 and P/J266.

If the wires and components are OK, turn the power OFF and replace the MD PWB.

- MD PWB (7525/30/35) (PL 18.2A)
- MD PWB (7545/56) (PL 18.2B)

341-361 MD PWB F16 Open

BSD-ON:+24VDC-2 Wirenet

Fuse 16 on the MD PWB has blown.

CAUTION

You must remove the cause of Fuse meltdown before replacing the MD PWB or replacement PWB will be damaged.

NOTE: *When turning the power OFF, turn OFF the Power Switch first and then the Main Power.*

Cause/Action

There is a short circuit or excessive mechanical load in the following component or a short circuit in the wiring from the component to the MD PWB:

- Registration Clutch (PL 15.2)

Go to the +24VDC-2 Wirenet and check the +24VDC wiring from P/J523 on the MD PWB to P/J260.

If the wires and components are OK, turn the power OFF and replace the MD PWB.

- MD PWB (7525/30/35) (PL 18.2A)
- MD PWB (7545/56) (PL 18.2B)

341-368 MCU-SW Firmware Mismatch

BSD-ON:-

The MCU software for the 7545/56 model is installed in the 7525/30/35 model. Or, the MCU software for the 7525/30/35 model is installed in the 7545/56 model.

NOTE: *When turning the power OFF, turn OFF the Power Switch first and then the Main Power Switch.*

Cause/Action

1. Turn the power OFF and ON.
2. Install the correct version of the IOT firmware.
3. Initialize the IOT NVM (includes writing back the adjustment NVM). If the problem persists, replace the MCU PWB.
   - MCU PWB (7525/30/35) (PL 18.2A)
   - MCU PWB (7545/56) (PL 18.2B)

341-369 MD Type Mismatch

BSD-ON:BSD 3.8 PWBS Detection

The MD PWD for the 7545/56 model is installed in the 7525/30/35 model. Or, the MD PWD for the 7525/30/35 model is installed in the 7545/56 model.

NOTE: *When turning the power OFF, turn OFF the Power Switch first and then the Main Power Switch.*

Cause/Action

1. Turn the power OFF and replace with the correct MD PWB.
   - MD PWB (7525/30/35) (PL 18.2A)
   - MD PWB (7545/56) (PL 18.2B)

341-371 Fault

Procedure

Go to No-Run RAP

342-319 (7525/30/35) Drum Y, M, C Motor Fail

BSD-ON:BSD 9.1 Drum/Developer Drive Control (Y,M,C) (7525,7530,7535)

The Drum/Developer Drive Motor (Y, M, C) revolution failure was detected.

NOTE: *When turning the power OFF, turn OFF the Power Switch first and then the Main Power Switch.*

Procedure

Turn the power OFF and remove the Front Cover. Remove the Drum (Y, M, C) and the Developer (Y, M, C) and cheat the Front Cover Interlock Switch.
Turn the power ON and enter the Diag mode. Turn ON dC330 [091-026] (Drum/Developer Drive Motor Y, M, C). **Does the Drum/Developer Drive Motor (Y, M, C) rotate?**

Y N

Turn the power OFF and remove the Rear Upper Cover. Turn the power ON.
Is the voltage between the MD PWB J526-3 (+) and the GND (-) +24VDC?

Y N

Go to +24VDC Power RAP (7525/30/35) RAP.

Is the voltage between the MD PWB J527-A16 (+) and the GND (-) +5VDC?

Y N

Go to +5VDC Power RAP.

Turn the power OFF and check the connections between the MD PWB J526 and the Drum/Developer Drive Motor (Y, M, C) J246, as well as between the MD PWB J527 and the Drum/Developer Drive Motor (Y, M, C) J247 for open circuits, short circuits, and poor contacts.
If no problems are found, replace the following parts in sequence:

- Drum/Developer Drive Motor (Y, M, C) (PL 3.3A)
- MD PWB (PL 18.2A)
- MCU PWB (PL 18.2A)

Press the Stop button and turn the power OFF. Install the Drum (Y, M, C), the Developer (Y, M, C), and the Front Cover.
Turn the power ON and enter the Diag mode. Turn ON dC330 [091-026] (Drum/Developer Drive Motor Y, M, C). **Does the Drum/Developer Drive Motor (Y, M, C) rotate?**

Y N

Check the Drum (Y, M, C) and the Developer (Y, M, C) for loading

Press the Stop button and turn the power OFF. Check the connection between the Drum/Developer Drive Motor (Y, M, C) J247-8 and the MD PWB J527-A9 for open circuit, short circuit, and poor contact.
If no problems are found, replace the following parts in sequence:

- MD PWB (PL 18.2A)
- MCU PWB (PL 18.2A)

342-319 (7545/56) Drum Y, M, C Motor Fail

BSD-ON:BSD 9.2 Drum Drive Control (Y,M,C) (7545,7556)

The Drum Drive Motor (Y, M, C) revolution failure was detected.

NOTE: *When turning the power OFF, turn OFF the Power Switch first and then the Main Power Switch.*

Procedure

Turn the power OFF and open the Front Cover. Remove the Drum (Y, M, C) and close the Front Cover.
Turn the power ON and enter the Diag mode. Turn ON dC330 [091-027] (Drum Drive Motor Y, M, C). **Does the Drum Drive Motor (Y, M, C) rotate?**

Y N

Turn the power OFF and remove the Rear Upper Cover. Turn the power ON.
Is the voltage between the MD PWB J526-3 (+) and the GND (-) +24VDC?

Y N

Go to +24VDC Power RAP (7545/56) RAP.

Is the voltage between the MD PWB J527-A16 (+) and the GND (-) +5VDC?

Y N

Go to +5VDC Power RAP.

Turn the power OFF and check the connections between the MD PWB J526 and the Drum Drive Motor (Y, M, C) J246, as well as between the MD PWB J527 and the Drum Drive Motor (Y, M, C) J247 for open circuits, short circuits, and poor contacts.
If no problems are found, replace the following parts in sequence:

- Drum Drive Motor (Y, M, C) (PL 3.3B)
- MD PWB (PL 18.2B)
- MCU PWB (PL 18.2B)

Press the Stop button and open the Front Cover. Install the Drum (Y, M, C) and close the Front Cover.
Turn the power ON and enter the Diag mode. Turn ON dC330 [091-027] (Drum Drive Motor Y, M, C). **Does the Drum Drive Motor (Y, M, C) rotate?**

Y N

Check the Drum (Y, M, C) for loading.

Press the Stop button and turn the power OFF. Check the connection between the Drum Drive Motor
(Y, M, C) J247-8 and the MD PWB J527-A9 for open circuit, short circuit, and poor contact.
If no problems are found, replace the following parts in sequence:

- MD PWB (PL 18.2B)
- MCU PWB (PL 18.2B)

342-323 Drum K Motor Fail

BSD-ON:BSD 9.4 Drum/Developer Drive Control (K)

The Drum/Developer Drive Motor (K) revolution failure was detected.

NOTE: *When turning the power OFF, turn OFF the Power Switch first and then the Main Power Switch.*

Procedure

Turn the power OFF and remove the Front Cover. Remove the Drum (K) and the Developer (K) and cheat the Front Cover Interlock Switch.
Turn the power ON and enter the Diag mode. Turn ON dC330 [091-033] (Drum/Developer Drive Motor K). **Does the Drum/Developer Drive Motor (K) rotate?**

Y **N**

Turn the power OFF and remove the Rear Upper Cover. Turn the power ON.
Is the voltage between the MD PWB J526-1 (+) and the GND (-) +24VDC?

Y **N**

Go to +24VDC Power RAP (7525/30/35) or +24VDC Power RAP (7545/56)

Is the voltage between the MD PWB J527-A8 (+) and the GND (-) +5VDC?

Y **N**

Go to +5VDC Power RAP.

Turn the power OFF and check the connections between the MD PWB J526 and the Drum/Developer Drive Motor (K) J240, as well as between the MD PWB J527 and the Drum/Developer Drive Motor (K) J241 for open circuits, short circuits, and poor contacts.
If no problems are found, replace the following parts in sequence:

- Drum/Developer Drive Motor (K) (7525/30/35) (PL 3.3A)
- Drum/Developer Drive Motor (K) (7545/56) (PL 3.3B)
- MD PWB (7525/30/35) (PL 18.2A)
- MD PWB (7545/56) (PL 18.2B)
- MCU PWB (7525/30/35) (PL 18.2A)
- MCU PWB (7545/56) (PL 18.2B)

Press the Stop button and turn the power OFF. Install the Drum (K), the Developer (K), and the Front Cover.
Turn the power ON and enter the Diag mode. Turn ON dC330 [091-033] (Drum/Developer Drive Motor K). **Does the Drum/Developer Drive Motor (K) rotate?**

Y **N**

Check the Drum (K) and the Developer (K) for loading

Press the Stop button and turn the power OFF. Check the connection between the Drum/Developer Drive Motor (K) J241-8 and the MD PWB J527-A1 for open circuit, short circuit, and poor contact.
If no problems are found, replace the following parts in sequence:

- MD PWB (7525/30/35) (PL 18.2A)
- MD PWB (7545/56) (PL 18.2B)
- MCU PWB (7525/30/35) (PL 18.2A)
- MCU PWB (7545/56) (PL 18.2B)

342-324 IBT Motor Fail

BSD-ON:BSD 9.28 IBT Drive Control

The IBT Drive Motor revolution failure was detected.

NOTE: *When turning the power OFF, turn OFF the Power Switch first and then the Main Power Switch.*

Procedure

Turn the power OFF. Remove the IBT Unit and cheat the L/H Cover Interlock Switch.
Turn the power ON and enter the Diag mode. Turn ON dC330 [094-006] (IBT Drive Motor).
Does the IBT Drive Motor rotate?

Y N

Turn the power OFF and remove the Rear Upper Cover. Turn the power ON.
Is the voltage between the MD PWB J526-5 (+) and the GND (-) +24VDC?

Y N

Go to +24VDC Power RAP (7525/30/35) or +24VDC Power RAP (7545/56) .

Is the voltage between the MD PWB J527-B8 (+) and the GND (-) +5VDC?

Y N

Go to +5VDC Power RAP.

Turn the power OFF and check the connections between the MD PWB J526 and the IBT Drive Motor J248, as well as between the MD PWB J527 and the IBT Drive Motor J249 for open circuits, short circuits, and poor contacts.
If no problems are found, replace the following parts in sequence:

- IBT Drive Motor (7525/30/35) (PL 3.3A)
- IBT Drive Motor (7545/56) (PL 3.3B)
- MD PWB (7525/30/35) (PL 18.2A)
- MD PWB (7545/56) (PL 18.2B)
- MCU PWB (7525/30/35) (PL 18.2A)
- MCU PWB (7545/56) (PL 18.2B)

Press the Stop button and turn the power OFF. Install the IBT Unit and close the L/H Cover.
Turn the power ON and enter the Diag mode. Turn ON dC330 [094-006] (IBT Drive Motor).
Does the IBT Drive Motor rotate?

Y N

Check the IBT Drive for loading. Also, check the IBT for loading due to blockage in the IBT Waste Toner Collection Auger

Press the Stop button and turn the power OFF. Check the connection between the IBT Drive Motor
J249-8 and the MD PWB J527-B1 for open circuit, short circuit, and poor contact.
If no problems are found, replace the MD PWB.

- MD PWB (7525/30/35) (PL 18.2A)
- MD PWB (7545/56) (PL 18.2B)

342-325 Main Motor Fail

BSD-ON:BSD 4.1 Main Drive Control

BSD-ON:BSD 8.4 Tray Module Paper Transportation (3 of 4) (3TM)

BSD-ON:BSD 8.1 Tray 1 and MSI Paper Transportation

The Main Drive Motor revolution failure was detected.

NOTE: *When turning the power OFF, turn OFF the Power Switch first and then the Main Power Switch.*

Procedure

Turn the power OFF. Remove the IBT Unit and cheat the L/H Cover Interlock Switch.
Turn the power ON and enter the Diag mode. Turn ON dC330 [042-002] (Main Drive Motor).
Does the Main Drive Motor rotate?

Y N

Turn the power OFF and remove the Rear Upper Cover. Turn the power ON.
Is the voltage between the MD PWB J535-1 (+) and the GND (-) +24VDC?

Y N

Go to +24VDC Power RAP (7525/30/35) or +24VDC Power RAP (7545/56) .

Is the voltage between the MD PWB J525-A16 (+) and the GND (-) +5VDC?

Y N

Go to +5VDC Power RAP.

Turn the power OFF and check the connections between the MD PWB J535 and the Main Drive Motor J244, as well as between the MD PWB J525 and the Main Drive Motor J245 for open circuits, short circuits, and poor contacts.
If no problems are found, replace the following parts in sequence:

- Main Drive Motor (PL 3.2)
- MD PWB (7525/30/35) (PL 18.2A)
- MD PWB (7545/56) (PL 18.2B)
- MCU PWB (7525/30/35) (PL 18.2A)
- MCU PWB (7545/56) (PL 18.2B)

Press the Stop button and turn the power OFF. Install the IBT Unit and close the L/H Cover.
Turn the power ON and enter the Diag mode. Turn ON dC330 [042-002] (Main Drive Motor).
Does the Main Drive Motor rotate?

Y N

Check the 2nd BTR for loading and the Drive Gear for revolution failure or damage

Press the Stop button. (7525/30/35)
Turn ON dC330 [042-002] (Main Drive Motor), then turn ON dC330 [077-001] (Takeaway Clutch). (7545/56)
Turn ON dC330 [042-002] (Main Drive Motor), then turn ON dC330 [077-050] (Takeaway Motor).
Does the Main Drive Motor rotate?

Y N

Check the MSI Takeaway Roll and the Tray 1 Takeaway Roll for loading and the Drive Gear for revolution failure or damage

Press the Stop button. Turn ON dC330 [042-002] (Main Drive Motor), then turn ON dC330 [077-002] (Registration Clutch). **Does the Main Drive Motor rotate?**

Y N

Check the Registration Roll for loading and the Drive Gear for revolution failure or damage

Press the Stop button and turn the power OFF. Check the connection between the Main Drive Motor J245-8 and the MD PWB J525-A9 for open circuit, short circuit, and poor contact.

If no problems are found, replace the following parts in sequence:

- MD PWB (7525/30/35) (PL 18.2A)
- MD PWB (7545/56) (PL 18.2B)
- MCU PWB (7525/30/35) (PL 18.2A)
- MCU PWB (7545/56) (PL 18.2B)

342-326 1st BTR Contact/Retract Fault

BSD-ON:BSD 9.29 1st BTR Contact Retract Control

After the 1st BTR Contact/Retract operation has started, it does not complete within the specified time.

NOTE: *When turning the power OFF, turn OFF the Power Switch first and then the Main Power Switch.*

Procedure

Remove the 1st BTR Contact Retract Sensor Bracket. Turn the power ON and enter the Diag mode.

Turn ON DC330 [094-200]. Use a sheet of paper, etc. to block/clear the light path to the 1st BTR Contact Retract Sensor.

Does the display change between High/Low?

Y N

Use OF 99-2 Transmissive Sensor RAP to fix the 1st BTR Contact Retract Sensor.

Press the Stop button and turn the power OFF. Install the 1st BTR Contact Retract Sensor Bracket.

Turn the power ON and enter the Diag mode. Turn ON DC330 [094-012] (Contact) and DC330 [094-013] (Retract) alternately. **Does it contact/retract?**

Y N

Remove the IBT and check the following:

- The IBT Assembly for mechanical loading or damage
- The 1st BTR Contact Retract Gear for wear, damage, and operation failure
- The 1st BTR Contact Retract Clutch for improper installation
- The 1st BTR Contact Retract Sensor for improper installation
- The connection between the 1st BTR Contact Retract Clutch J250 and the MCU PWB J417 for open circuit, short circuit, and poor contact

If no problems are found, replace the 1st BTR Contact Retract Clutch (PL 3.2).

Press the Stop button and turn the power OFF.

Replace the MCU PWB.

- MCU PWB (7525/7530/7535) (PL 18.2A)
- MCU PWB (7545/7556) (PL 18.2B)

342-330 IH Exhaust Fan Fail

BSD-ON:BSD 10.3 Fusing Heat Control (1 of 3)

The IH Exhaust Fan error was detected.

NOTE: *When turning the power OFF, turn OFF the Power Switch first and then the Main Power Switch.*

Procedure

Enter DC122 Fail History. **Has 041-326 faults (MCU PWB F3 Open) occurred?**

Y N

Turn the power OFF and remove the Rear Upper Cover. Disconnect the connector J592 of the MD PWB and open the Chassis Assembly. Rotate the IH Exhaust Fan manually to check for loading.

Turn the power ON and enter the Diag mode. Turn ON dC330 [042-017] (IH Exhaust Fan).

Is the IH Exhaust Fan rotating?

Y N

When the Diag is turned ON, is the voltage between the MCU PWB J414-B1 (+) and the GND (-) +24VDC?

Y N

Turn the power OFF and replace the MCU PWB.

- MCU PWB (7525/30/35) (PL 18.2A)
- MCU PWB (7545/56) (PL 18.2B)

Turn the power OFF and check the connection between the IH Exhaust Fan J225 and the MCU PWB J414 for open circuit, short circuit, and poor contact.

If no problems are found, replace the following parts in sequence:

- IH Exhaust Fan (7525/30/35) (PL 4.3A)
- IH Exhaust Fan (7545/56) (PL 4.3B)
- MCU PWB (7525/30/35) (PL 18.2A)
- MCU PWB (7545/56) (PL 18.2B)

Press the Stop button and turn the power OFF. Check the connection between the IH Exhaust Fan J225-3 and the MCU PWB J414-B3 for open circuit, short circuit, and poor contact. If no problems are found, replace the MCU PWB.

- MCU PWB (7525/30/35) (PL 18.2A)
- MCU PWB (7545/56) (PL 18.2B)

Go to the 341-326 RAP.

342-332 IH Intake Fan Fail

BSD-ON:BSD 10.3 Fusing Heat Control (1 of 3)

The IH Intake Fan error was detected.

NOTE: *When turning the power OFF, turn OFF the Power Switch first and then the Main Power Switch.*

Procedure

Enter DC122 Fail History. **Has 041-350 faults (MD PWB F7 Open) occurred?**

Y N

Turn the power OFF and remove the Rear Upper Cover. Disconnect the connector J592 of the MD PWB and open the Chassis Assembly.

(7525/30/35)

Rotate the IH Intake Fan manually to check for loading.

Turn the power ON and enter the Diag mode. Turn ON dC330 [042-016] (IH Intake Fan).

Is the IH Intake Fan rotating?

Y N

When the Diag is turned ON, is the voltage between the MD PWB J529-B9 (+) and the GND (-) +24VDC?

Y N

Turn the power OFF and replace the MD PWB.

- MD PWB (7525/30/35) (PL 18.2A)
- MD PWB (7545/56) (PL 18.2B)

Turn the power OFF and check the connection between the IH Intake Fan J226 and the MD PWB J529 for open circuit, short circuit, and poor contact.

If no problems are found, replace the following parts in sequence:

- IH Intake Fan (PL 4.1)
- MD PWB (7525/30/35) (PL 18.2A)
- MD PWB (7545/56) (PL 18.2B)
- MCU PWB (7525/30/35) (PL 18.2A)
- MCU PWB (7545/56) (PL 18.2B)

Press the Stop button and turn the power OFF. Check the connection between the IH Intake Fan J226-2 and the MD PWB J529-B11 for open circuit, short circuit, and poor contact. If no problems are found, replace the MD PWB.

- MD PWB (7525/30/35) (PL 18.2A)
- MD PWB (7545/56) (PL 18.2B)

Go to the 341-350 RAP.

342-334 (7525/30/35) IBT Fan Fail

BSD-ON:BSD 9.41 IBT/Process Fan Control (7525,7530,7535)

The IBT Fan 1, 2 error was detected.

NOTE: *When turning the power OFF, turn OFF the Power Switch first and then the Main Power Switch.*

Procedure

Enter DC122 Fail History. **Has 341-327 faults (MCU PWB F4 Open) occurred?**

Y **N**

Turn the power OFF and remove the Rear Upper Cover. Open the Front Cover and cheat the Front Cover Interlock Switch.

Turn the power ON and enter the Diag mode. Turn ON dC330 [042-019] (IBT Fan).

Does the IBT Fan1, 2 rotate?

Y **N**

When the Diag is turned ON, is the voltage between the MCU PWB J416-3/7 (+) and the GND (-) +24VDC?

Y **N**

Turn the power OFF and replace the MCU PWB (PL 18.2A).

Turn the power OFF and check the connection between the IBT Fan 1 J232 and the MCU PWB J416, as well as between the IBT Fan 2 J236 and the MCU PWB J416 for open circuits, short circuits, and poor contacts.

If no problems are found, replace the following parts in sequence:

- IBT Fan 1 (PL 4.2A)
- IBT Fan 2 (PL 4.2A)
- MCU PWB (PL 18.2A)

Press the Stop button and turn the power OFF. Check the connection between the IBT Fan 1 J232-2 and the MCU PWB J416-5, as well as between the IBT Fan 2 J236-2 and the MCU PWB J416-9 for open circuits, short circuits, and poor contacts. If no problems are found, replace the MCU PWB (PL 18.2A).

Go to the 341-327 RAP.

342-335 (7545/56) Process 1 Fan Fail

BSD-ON:BSD 9.43 Process Fan Control (7545,7556)

The Process 1 Fan error was detected.

NOTE: *When turning the power OFF, turn OFF the Power Switch first and then the Main Power Switch.*

Procedure

Enter DC122 Fail History. **Has 041-350 faults (MD PWB F7 Open) occurred?**

Y **N**

Turn the power OFF and remove the Rear Upper Cover. Open the Front Cover and cheat the Front Cover Interlock Switch.

Turn the power ON and enter the Diag mode. Turn ON dC330 [042-022] (Process 1 Fan).

Is the Process 1 Fan rotating?

Y **N**

When the Diag is turned ON, is the voltage between the MD PWB J537-1 (+) and the GND (-) +24VDC?

Y **N**

Turn the power OFF and replace the MD PWB (PL 18.2B).

Turn the power OFF and check the connection between the Process 1 Fan J228 and the MD PWB J537 for open circuit, short circuit, and poor contact.

If no problems are found, replace the following parts in sequence:

- Process 1 Fan (PL 4.2B)
- MD PWB (PL 18.2B)

Press the Stop button and turn the power OFF. Check the connection between the Process 1 Fan J228-2 and the MD PWB J537-3 for open circuit, short circuit, and poor contact. If no problems are found, replace the MD PWB (PL 18.2B).

Go to the 341-350 RAP.

342-336 Process 2 Fan Fail

BSD-ON:BSD 9.41 IBT/Process Fan Control (7525,7530,7535)

BSD-ON:BSD 9.43 Process Fan Control (7545,7556)

The Process 2 Fan error was detected.

NOTE: *When turning the power OFF, turn OFF the Power Switch first and then the Main Power Switch.*

Procedure

Enter DC122 Fail History. **Has 041-326 faults (MCU PWB F3 Open) occurred?**

Y N

Turn the power OFF and remove the Rear Upper Cover. Open the Front Cover and cheat the Front Cover Interlock Switch.

Turn the power ON and enter the Diag mode. Turn ON dC330 [042-013] (Process 2 Fan).

Is the Process 2 Fan rotating?

Y N

When the Diag is turned ON, is the voltage between the MCU PWB J416-11 (+) and the GND (-) +24VDC?

Y N

Turn the power OFF and replace the MCU PWB.

- MCU PWB (7525/30/35) (PL 18.2A)
- MCU PWB (7545/56) (PL 18.2B)

Turn the power OFF and check the connection between the Process 2 Fan J238 and the MCU PWB J416 for open circuit, short circuit, and poor contact.

If no problems are found, replace the following parts in sequence:

- Process 2 Fan (7525/30/35) (PL 4.2A)
- Process 2 Fan (7545/56) (PL 4.2B)
- MCU PWB (7525/30/35) (PL 18.2A)
- MCU PWB (7545/56) (PL 18.2B)

Press the Stop button and turn the power OFF. Check the connection between the Process 2 Fan J238-2 and the MCU PWB J416-13 for open circuit, short circuit, and poor contact. If no problems are found, replace the MCU PWB.

- MCU PWB (7525/30/35) (PL 18.2A)
- MCU PWB (7545/56) (PL 18.2B)

Go to the 341-326 RAP.

342-337 NOHAD Logic Fail

BSD-ON:BSD 1.3 LVPS Control

A fatal error was detected in NOHAD control.

NOTE: *When turning the power OFF, turn OFF the Power Switch first and then the Main Power Switch.*

Cause/Action

1. Turn the power OFF and ON.
2. Install the correct version of the MCU software. If the problem persists, replace the MCU PWB.
   - MCU PWB (7525/30/35) (PL 18.2A)
   - MCU PWB (7545/56) (PL 18.2B)

342-338 LVPS Front Fan Fail

BSD-ON:BSD 1.3 LVPS Control

An abnormality was detected in the LVPS Front Fan.

NOTE: *When turning the power OFF, turn OFF the Power Switch first and then the Main Power Switch.*

Procedure

Enter DC122 Fail History. **Has 041-350 faults (MD PWB F7 Open) occurred?**

Y N

Turn the power OFF and remove the Right Cover and Rear Upper Cover. Disconnect and reconnect P/J239. Rotate the Front LVPS Fan manually to check for loading.

Turn the power ON and enter the Diag mode. Turn ON dC330 [042-014] (Front LVPS Fan).

Is the Front LVPS Fan rotating?

Y N

When the Diag is turned ON, is the voltage between the MD PWB J529-A13 (+) and the GND (-) +24VDC?

Y N

Turn the power OFF and replace the MD PWB.

- MD PWB (7525/30/35) (PL 18.2A)
- MD PWB (7545/56) (PL 18.2B)

Turn the power OFF and check the connection between the Front LVPS Fan J239 and the MD PWB J529 for open circuit, short circuit, and poor contact.

If no problems are found, replace the following parts in sequence:

- Front LVPS Fan (PL 4.1)
- MD PWB (7525/30/35) (PL 18.2A)
- MD PWB (7545/56) (PL 18.2B)

Press the Stop button and turn the power OFF. Check the connection between the Front LVPS Fan J239-2 and the MD PWB J529-A14 for open circuit, short circuit, and poor contact. If no problems are found, replace the MD PWB.

- MD PWB (7525/30/35) (PL 18.2A)
- MD PWB (7545/56) (PL 18.2B)

Go to the 341-350 RAP.

342-340 (7545/56) Cartridge Fan Fail

BSD-ON:BSD 9.44 C Fan Control (7545,7556)

The Cartridge Fan error was detected.

NOTE: *When turning the power OFF, turn OFF the Power Switch first and then the Main Power Switch.*

Procedure

Enter DC122 Fail History. **Has 041-327 faults (MCU PWB F4 Open) occurred?**

Y N

Turn the power OFF and remove the Rear Upper Cover. Open the Front Cover and cheat the Front Cover Interlock Switch.

Turn the power ON and enter the Diag mode. Turn ON dC330 [042-021] (Cartridge Fan).

Is the Cartridge Fan rotating?

Y N

When the Diag is turned ON, is the voltage between the MCU PWB J416-7 (+) and the GND (-) +24VDC?

Y N

Turn the power OFF and replace the MCU PWB (PL 18.2B).

Turn the power OFF and check the connection between the Cartridge Fan J619 and the MCU PWB J416 for open circuit, short circuit, and poor contact.

If no problems are found, replace the following parts in sequence:

- Cartridge Fan (PL 4.2B)
- MCU PWB (PL 18.2B)

Press the Stop button and turn the power OFF. Check the connection between the Cartridge Fan J619-2 and the MCU PWB J416-9 for open circuit, short circuit, and poor contact. If no problems are found, replace the MCU PWB (PL 18.2B).

Go to the 341-327 RAP.

342-341 M HVPS Fan Fail

BSD-ON:BSD 9.42 Drive/HVPS/Bottom Fan (7525,7530,7535)

BSD-ON:BSD 9.45 Suction/M/Bottom Fan Control (7545,7556)

The HVPS Fan (7525/30/35) or M Fan (7545/56) error was detected.

NOTE: *When turning the power OFF, turn OFF the Power Switch first and then the Main Power Switch.*

Procedure

Enter DC122 Fail History. **Has 041-325 faults (MCU PWB F2 Open) occurred?**

Y **N**

Turn the power OFF and remove the Rear Upper Cover. Disconnect the connector J592 of the MD PWB and open the Chassis Assembly.
Turn the power ON and enter the Diag mode. Turn ON dC330 [042-012] (HVPS/M Fan).
Is the HVPS Fan or the M Fan rotating?

Y **N**

When the Diag is turned ON, is the voltage between the MCU PWB J417-A10 (+) and the GND (-) +24VDC?

Y **N**

Turn the power OFF and replace the MCU PWB.

- MCU PWB (7525/30/35) (PL 18.2A)
- MCU PWB (7545/56) (PL 18.2B)

Turn the power OFF and check the connection between the HVPS/M Fan J235 and the MCU PWB J417 for open circuit, short circuit, and poor contact.
If no problems are found, replace the following parts in sequence:

- HVPS Fan (7525/30/35) (PL 4.3A)
- M Fan (7545/56) (PL 4.3B)
- MCU PWB (7525/30/35) (PL 18.2A)
- MCU PWB (7545/56) (PL 18.2B)

Press the Stop button and turn the power OFF.
Check the connection between the HVPS/M Fan J235-3 and the MCU PWB J417-A12 for open circuit, short circuit, and poor contact.
If no problems are found, replace the MCU PWB.

- MCU PWB (7525/30/35) (PL 18.2A)
- MCU PWB (7545/56) (PL 18.2B)

Go to the 341-325 RAP.

342-342 (7545/56) Suction Fan Fail

BSD-ON:BSD 9.45 Suction/M/Bottom Fan Control (7545,7556)

The Suction Fan error was detected.

NOTE: *When turning the power OFF, turn OFF the Power Switch first and then the Main Power Switch.*

Procedure

Enter DC122 Fail History. **Has 041-325 faults (MCU PWB F2 Open) occurred?**

Y **N**

Turn the power OFF and remove the Rear Upper Cover. Disconnect the connector J592 of the MD PWB and open the Chassis Assembly. Rotate the Suction Fan manually to check for loading.
Turn the power ON and enter the Diag mode. Turn ON dC330 [042-020] (Suction Fan).
Is the Suction Fan rotating?

Y **N**

When the Diag is turned ON, is the voltage between the MCU PWB J417-A1 (+) and the GND (-) +24VDC?

Y **N**

Turn the power OFF and replace the MCU PWB (PL 18.2B).

Turn the power OFF and check the connection between the Suction Fan J231 and the MCU PWB J417 for open circuit, short circuit, and poor contact.
If no problems are found, replace the following parts in sequence:

- Suction Fan (PL 18.2B)
- MCU PWB (PL 18.2B)

Press the Stop button and turn the power OFF. Check the connection between the Suction Fan J231-2 and the MCU PWB J417-A3 for open circuit, short circuit, and poor contact. If no problems are found, replace the MCU PWB (PL 18.2B).

Go to the 341-325 RAP.

342-343 (7525/30/35/7545/56) Rear Bottom Fan Fail

BSD-ON:BSD 9.42 Drive/HVPS/Bottom Fan (7525,7530,7535),

BSD-ON:BSD 9.45 Suction/M/Bottom Fan Control (7545,7556)

The Bottom Fan error was detected.

NOTE: *When turning the power OFF, turn OFF the Power Switch first and then the Main Power Switch.*

Procedure

Enter DC122 Fail History. **Has 041-325 faults (MCU PWB F2 Open) occurred?**

Y **N**

Turn the power OFF and remove the Rear Upper Cover. Disconnect the connector J592 of the MD PWB and open the Chassis Assembly. Rotate the Bottom Fan manually to check for loading.

Turn the power ON and enter the Diag mode. Turn ON dC330 [042-015] (Bottom Fan).

Is the Bottom Fan rotating?

Y **N**

When the Diag is turned ON, is the voltage between the MCU PWB J417-B11 (+) and the GND (-) +24VDC?

Y **N**

Turn the power OFF and replace the MCU PWB.

- MCU PWB (7525/30/35) (PL 18.2A)
- MCU PWB (7545/56) (PL 18.2B)

Turn the power OFF and check the connection between the Bottom Fan J234 and the MCU PWB J417 for open circuit, short circuit, and poor contact.

If no problems are found, replace the following parts in sequence:

- Bottom Fan (7525/30/35) (PL 4.3A)
- Bottom Fan (7545/56) (PL 4.3B)
- MCU PWB (7525/30/35) (PL 18.2A)
- MCU PWB (7545/56) (PL 18.2B)

Press the Stop button and turn the power OFF. Check the connection between the Bottom Fan J234-2 and the MCU PWB J417-B13 for open circuit, short circuit, and poor contact.

If no problems are found, replace the MCU PWB.

- MCU PWB (7525/30/35) (PL 18.2A)
- MCU PWB (7545/56) (PL 18.2B)

Go to the 341-325 RAP.

342-400 Deodorant Filter Life End

BSD-ON:-

The Deodorant Filter must be replaced.

NOTE: *When turning the power OFF, turn OFF the Power Switch first and then the Main Power Switch.*

Cause/Action

Replace the Deodorant Filter and clear the DC135 HFSI Counter [954-860].

342-604 NOHAD Temperature Sensor Fail

BSD-ON:BSD 9.27 ADC and Environment Sensing

The NOHAD Thermistor error was detected.

NOTE: *When turning the power OFF, turn OFF the Power Switch first and then the Main Power Switch.*

Cause/Action

Turn the power OFF and check the connection between the NOHAD Thermistor P130 and the MCU PWB J414 for open circuit, short circuit, and poor contact. Also check whether there is poor connection or foreign substances at the detection section of the NOHAD Thermistor.

If no problems are found, replace the following parts in sequence:

- NOHAD Thermistor (7525/30/35) (PL 4.4A)
- NOHAD Thermistor (7545/56) (PL 4.4B)
- MCU PWB (7525/30/35) (PL 18.2A)
- MCU PWB (7545/56) (PL 18.2B)

342-605 (7525/30/35) Suction Drive Fan Fail

BSD-ON:BSD 9.42 Drive/HVPS/Bottom Fan (7525,7530,7535)

The Drive Fan error was detected.

NOTE: *When turning the power OFF, turn OFF the Power Switch first and then the Main Power Switch.*

Procedure

Enter DC122 Fail History. **Has 041-325 faults (MCU PWB F2 Open) occurred?**

Y **N**

Turn the power OFF and remove the Rear Upper Cover. Disconnect the connector J592 of the MD PWB and open the Chassis Assembly. Rotate the Drive Fan manually to check for loading.

Turn the power ON and enter the Diag mode. Turn ON dC330 [042-020] (Drive Fan).

Is the Drive Fan rotating?

Y **N**

When the Diag is turned ON, is the voltage between the MCU PWB J417-A1 (+) and the GND (-) +24VDC?

Y **N**

Turn the power OFF and replace the MCU PWB (PL 18.2A).

Turn the power OFF and check the connection between the Drive Fan J231 and the MCU PWB J417 for open circuit, short circuit, and poor contact.

If no problems are found, replace the following parts in sequence:

- Drive Fan (PL 18.2A)
- MCU PWB (PL 18.2A)

Press the Stop button and turn the power OFF. Check the connection between the Drive Fan J231-2 and the MCU PWB J417-A3 for open circuit, short circuit, and poor contact. If no problems are found, replace the MCU PWB (PL 18.2A).

Go to the 341-325 RAP.

342-609 (7545/56) LH Fan Fail

BSD-ON:BSD 9.46 LH Fan Control

The LH Fan 1-3 error was detected.

NOTE: *•The LH Fan is an option Fan to prevent paper blocking. If the LH Fan is installed, set NVM (741-140) to "1".*

- *When turning the power OFF, turn OFF the Power Switch first and then the Main Power Switch.*

Procedure

Enter DC122 Fail History. **Has 041-355 faults (MD PWB F10 Open) occurred?**

Y N

Turn the power OFF. Open the L/H Cover and cheat the L/H Cover Interlock Switch. Disconnect and reconnect the LH Fan PWB J453, J454, LH Fan 2 P/J217, and LH Fan 3 P/J218. Rotate the LH Fan 1-3 manually to check for loading.

Turn the power ON and enter the Diag mode. Turn ON dC330 [042-026] (LH Fan).

Are the LH Fan 1-3 rotating?

Y N

Press the Stop button. **Is the voltage between the LH Fan PWB J450-5 (+) and the GND (-) +24VDC?**

Y N

Remove the Rear Upper Cover. **Is the voltage between the MD PWB J523-B13 (+) and the GND (-) +24VDC?**

Y N

Turn the power OFF and replace the MD PWB (PL 18.2B).PL18.2b

Turn the power OFF and check the connection between the MD PWB J523 and the LH Fan PWB J450 for open circuit, short circuit, and poor contact.

Turn ON dC330 [042-026] (LH Fan) and measure the following voltages:

- Between the LH Fan PWB J453-1 (+) and the GND (-) (LH Fan 1)
- Between the LH Fan PWB J454-1 (+) and the GND (-) (LH Fan 2)
- Between the LH Fan PWB J454-5 (+) and the GND (-) (LH Fan 3)

Is the voltage +24VDC?

Y N

Turn the power OFF and check the connection between the MD PWB J523 and the LH Fan PWB J450 for open circuit, short circuit, and poor contact. If no problems are found, replace the following parts in sequence:

- LH Fan PWB
- MD PWB PL 18.2B
- MCU PWB (PL 18.2B)

Press the Stop button and turn the power OFF. Check the following connectors for open circuits, short circuits, and poor contacts.

- Between the LH Fan PWB J454 and the LH Fan 2 P/J217
- Between the LH Fan PWB J454 and the LH Fan 3 J218

If no problems are found, replace the LH Fan (1-3).

A B

A B

Press the Stop button. Turn the power OFF and check the following:

- Check the connection between the LH Fan 2 P/J217-3 and the LH Fan PWB J454-3 for open circuit, short circuit, and poor contact.
- Check the connection between the LH Fan 3 J218-3 and the LH Fan PWB J454-7 for open circuit, short circuit, and poor contact.
- Check the connection between the LH Fan PWB J450-2 and the MD PWB J523-B16 for open circuit, short circuit, and poor contact.

If no problems are found, replace the following parts in sequence:

- LH Fan PWB
- MD PWB (PL 18.2B)

Go to the 341-355 RAP.

342-615 (7545/56) C Exhaust Fan Fail

BSD-ON:BSD 9.44 C Fan Control (7545,7556)

The C Exhaust Fan error was detected.

NOTE: *When turning the power OFF, turn OFF the Power Switch first and then the Main Power Switch.*

Procedure

Enter DC122 Fail History. **Has 041-350 faults (MD PWB F7 Open) occurred?**

Y **N**

Turn the power OFF and remove the Rear Upper Cover. Disconnect the connector J592 of the MD PWB and open the Chassis Assembly.

Turn the power ON and enter the Diag mode. Turn ON dC330 [042-024] (C Exhaust Fan).

Is the C Exhaust Fan rotating?

Y **N**

When the Diag is turned ON, is the voltage between the MD PWB J529-B13 (+) and the GND (-) +24VDC?

Y **N**

Turn the power OFF and replace the MD PWB (PL 18.2B).

Turn the power OFF and check the connection between the C Exhaust Fan J227 and the MD PWB J529 for open circuit, short circuit, and poor contact.

If no problems are found, replace the following parts in sequence:

- C Exhaust Fan (PL 4.3B)
- MD PWB (PL 18.2B)

Press the Stop button and turn the power OFF. Check the connection between the C Exhaust Fan J227-2 and the MD PWB J529-B15 for open circuit, short circuit, and poor contact. If no problems are found, replace the MD PWB (PL 18.2B).

Go to the 341-350 RAP.

345-310 Image Ready NG

BSD-ON:Chain 3 BSDs

The Controller image preparation failure was detected.

NOTE: *When turning the power OFF, turn OFF the Power Switch first and then the Main Power Switch.*

Cause/Action

1. Turn the power OFF and ON.
2. Turn the power OFF and check whether there is poor connection or foreign substances at the following connectors.
   - Between BP PWB and MCU PWB P451
   - Between BP PWB J335 and SBC PWB P335
   - Between BP PWB J309 and SBC PWB P309

   If no problems are found, replace the following parts in sequence:
   - BP PWB (7525/30/35) (PL 18.2A)
   - BP PWB (7545/56) (PL 18.2B)
   - MCU PWB (7525/30/35) (PL 18.2A)
   - MCU PWB (7545/56) (PL 18.2B)
   - SBC PWB (PL 35.2)

345-311 Controller Communication Fault

BSD-ON:Chain 3 BSDs

Communication error between SBC PWB and MCU PWB was detected.

NOTE: *When turning the power OFF, turn OFF the Power Switch first and then the Main Power Switch.*

Cause/Action

1. Turn the power OFF and ON.
2. Turn the power OFF and check whether there is poor connection or foreign substances at the following connectors.
   - Between BP PWB and MCU PWB P451
   - Between BP PWB J335 and SBC PWB P335
   - Between BP PWB J309 and SBC PWB P309

   If no problems are found, replace the following parts in sequence:
   - BP PWB (7525/30/35) (PL 18.2A)
   - BP PWB (7545/56) (PL 18.2B)
   - MCU PWB (7525/30/35) (PL 18.2A)
   - MCU PWB (7545/56) (PL 18.2B)
   - SBC PWB (PL 35.2)

345-312 Drive Logic Fault

BSD-ON:Chain 3 BSDs

A fatal error was detected in Drive control.

NOTE: *When turning the power OFF, turn OFF the Power Switch first and then the Main Power Switch.*

Cause/Action

1. Turn the power OFF and ON.
2. Install the correct version of the IOT firmware.
3. Initialize the IOT NVM (includes writing back the adjustment NVM). If the problem persists, replace the MCU PWB.
   - MCU PWB (7525/30/35) (PL 18.2A)
   - MCU PWB (7545/56) (PL 18.2B)

345-313 ENG_LOGIC_FAIL

BSD-ON:-

ENGINE internal mismatch (control logic mismatch)

NOTE: *When turning the power OFF, turn OFF the Power Switch first and then the Main Power Switch.*

Cause/Action

1. Turn the power OFF and ON.
2. Install the correct version of the IOT firmware.
3. Initialize the IOT NVM (includes writing back the adjustment NVM). If the problem persists, replace the MCU PWB.
   - MCU PWB (7525/30/35) (PL 18.2A)
   - MCU PWB (7545/56) (PL 18.2B)

345-321 MK_Panel_NG

BSD-ON:-

Communication error between IM and MK (when receiving Pitch Check, the corresponding Panel Build is not received)

NOTE: *When turning the power OFF, turn OFF the Power Switch first and then the Main Power Switch.*

Cause/Action

1. Turn the power OFF and ON.
2. Install the correct version of the IOT firmware.
3. Initialize the IOT NVM (includes writing back the adjustment NVM). If the problem persists, replace the MCU PWB.
   - MCU PWB (7525/30/35) (PL 18.2A)
   - MCU PWB (7545/56) (PL 18.2B)

345-322 MK_Pitch_NG

BSD-ON:-

Communication error between IM and MK (when receiving Pitch Notify, the corresponding Pitch Check is not received)

NOTE: *When turning the power OFF, turn OFF the Power Switch first and then the Main Power Switch.*

Cause/Action

1. Turn the power OFF and ON.
2. Install the correct version of the IOT firmware.
3. Initialize the IOT NVM (includes writing back the adjustment NVM). If the problem persists, replace the MCU PWB.
   - MCU PWB (7525/30/35) (PL 18.2A)
   - MCU PWB (7545/56) (PL 18.2B)

345-331 MK_MKIF_MSG_Reject

BSD-ON:-

Communication error between IM and MK (the received message was rejected)

NOTE: *When turning the power OFF, turn OFF the Power Switch first and then the Main Power Switch.*

Cause/Action

1. Turn the power OFF and ON.
2. Install the correct version of the IOT firmware.
3. Initialize the IOT NVM (includes writing back the adjustment NVM). If the problem persists, replace the MCU PWB.
   - MCU PWB (7525/30/35) (PL 18.2A)
   - MCU PWB (7545/56) (PL 18.2B)

345-332 MK_MMIF_MSG_Reject

BSD-ON:-

Communication error between MM and Sub Module (the received message was rejected)

NOTE: *When turning the power OFF, turn OFF the Power Switch first and then the Main Power Switch.*

Cause/Action

1. Turn the power OFF and ON.
2. Install the correct version of the IOT firmware.
3. Initialize the IOT NVM (includes writing back the adjustment NVM). If the problem persists, replace the MCU PWB.
   - MCU PWB (7525/30/35) (PL 18.2A)
   - MCU PWB (7545/56) (PL 18.2B)

345-350 MK_Emergency_Over_Wait

BSD-ON:-

MK internal mismatch (panel creation is obstructed continuously over the predetermined time)

NOTE: *When turning the power OFF, turn OFF the Power Switch first and then the Main Power Switch.*

Cause/Action

1. Turn the power OFF and ON.
2. Install the correct version of the IOT firmware.
3. Initialize the IOT NVM (includes writing back the adjustment NVM). If the problem persists, replace the MCU PWB.
   - MCU PWB (7525/30/35) (PL 18.2A)
   - MCU PWB (7545/56) (PL 18.2B)

345-351 MK_Emergency_No_Timer

BSD-ON:-

MK internal mismatch (Call Back Timer has ran out and can't be controlled)

NOTE: *When turning the power OFF, turn OFF the Power Switch first and then the Main Power Switch.*

Cause/Action

1. Turn the power OFF and ON.
2. Install the correct version of the IOT firmware.
3. Initialize the IOT NVM (includes writing back the adjustment NVM). If the problem persists, replace the MCU PWB.
   - MCU PWB (7525/30/35) (PL 18.2A)
   - MCU PWB (7545/56) (PL 18.2B)

345-352 MK_Emergency_Enforced_Stop

BSD-ON:-

MK internal mismatch (the MM has performed a forced stop process)

NOTE: *When turning the power OFF, turn OFF the Power Switch first and then the Main Power Switch.*

Cause/Action

1. Turn the power OFF and ON.
2. Install the correct version of the IOT firmware.
3. Initialize the IOT NVM (includes writing back the adjustment NVM). If the problem persists, replace the MCU PWB.
   - MCU PWB (7525/30/35) (PL 18.2A)
   - MCU PWB (7545/56) (PL 18.2B)

345-370 LPH Power On Fault Multi

BSD-ON:-

Power source error during LPH batch download complete verification or MCU error.
(Fail has occurred in multiple LPHs.)

NOTE: *When turning the power OFF, turn OFF the Power Switch first and then the Main Power Switch.*

Procedure

Turn the power OFF and remove the Rear Upper Cover. Turn the power ON.

Is the voltage between the MD PWB J532-4/8/12/16 (+) and the GND (-) +5VDC?

Y **N**

Go to +5VDC Power +5VDC Power RAP.

Is the voltage between the MD PWB J532-2/6/10/14 (+) and the GND (-) +1.8VDC?

Y **N**

Turn the power OFF and disconnect the MD PWB connector J532.

Measure the resistance between the MD PWB J532-2/6/10/14 and the Frame.

Is the resistance infinite for all?

Y **N**

Check the wires of the pins with non-infinite resistance for peeled-off coatings and short circuits due to pinching.

Replace the MD PWB.

- MD PWB (7525/30/35) (PL 18.2A)
- MD PWB (7545/56) (PL 18.2B)

Turn the power OFF and check the following connectors for open circuit, short circuit, and poor connection.

- Between MCU PWB P/J557 and LPH Rear PWB J561
- Between MCU PWB J556 and LPH Rear PWB J560
- Between MCU PWB J555 and LPH Rear PWB J559
- Between MCU PWB J554 and LPH Rear PWB J558

If no problems are found, replace the MCU PWB.

- MCU PWB (7525/30/35) (PL 18.2A)
- MCU PWB (7545/56) (PL 18.2B)

If the problem persists, refer to DC131 [749-001] (LPH Fail Color) to go to the appropriate RAP.
(1: Error has occurred at Y, 2: Error has occurred at M, 4: Error has occurred at C, 8: Error has occurred at K)

- Y color: 361-350 RAP
- M color: 361-351 RAP
- C color: 361-352 RAP
- K color: 361-353 RAP

345-371 LPH Download Data Fault Multi

BSD-ON:-

DELSOL register error during the LPH batch download complete verification or connector error.
(Fail has occurred in multiple LPHs.)

NOTE: *When turning the power OFF, turn OFF the Power Switch first and then the Main Power Switch.*

Procedure

Turn the power OFF and remove the Rear Upper Cover. Turn the power ON. **Is the voltage between the MD PWB J532-4/8/12/16 (+) and the GND (-) +5VDC?**

Y **N**

Go to +5VDC Power +5VDC Power RAP.

Is the voltage between the MD PWB J532-2/6/10/14 (+) and the GND (-) +1.8VDC?

Y **N**

Turn the power OFF and disconnect the MD PWB connector J532.
Measure the resistance between the MD PWB J532-2/6/10/14 and the Frame.
Is the resistance infinite for all?

Y **N**

Check the wires of the pins with non-infinite resistance for peeled-off coatings and short circuits due to pinching.

Replace the MD PWB.

- MD PWB (7525/30/35) (PL 18.2A)
- MD PWB (7545/56) (PL 18.2B)

Turn the power OFF and check the following connectors for open circuit, short circuit, and poor connection.

- Between MCU PWB P/J557 and LPH Rear PWB J561
- Between MCU PWB J556 and LPH Rear PWB J560
- Between MCU PWB J555 and LPH Rear PWB J559
- Between MCU PWB J554 and LPH Rear PWB J558

If no problems are found, replace the MCU PWB.

- MCU PWB (7525/30/35) (PL 18.2A)
- MCU PWB (7545/56) (PL 18.2B)

If the problem persists, refer to DC131 [749-001] (LPH Fail Color) to go to the appropriate RAP.
(1: Error has occurred at Y, 2: Error has occurred at M, 4: Error has occurred at C, 8: Error has occurred at K)

- Y color: 361-354 RAP
- M color: 361-355 RAP
- C color: 361-356 RAP
- K color: 361-357 RAP

345-372 LPH Mismatch Fault Multi

BSD-ON:-

The model numbers of multiple LPH Units do not match.

NOTE: *When turning the power OFF, turn OFF the Power Switch first and then the Main Power Switch.*

Procedure

Turn the power OFF and remove the Rear Upper Cover. Turn the power ON. **Is the voltage between the MD PWB J532-4/8/12/16 (+) and the GND (-) +5VDC?**

Y **N**

Go to +5VDC Power +5VDC Power RAP.

Is the voltage between the MD PWB J532-2/6/10/14 (+) and the GND (-) +1.8VDC?

Y **N**

Turn the power OFF and disconnect the MD PWB connector J532.
Measure the resistance between the MD PWB J532-2/6/10/14 and the Frame.
Is the resistance infinite for all?

Y **N**

Check the wires of the pins with non-infinite resistance for peeled-off coatings and short circuits due to pinching.

Replace the MD PWB.

- MD PWB (7525/30/35) (PL 18.2A)
- MD PWB (7545/56) (PL 18.2B)

Check that the values in DC131 [749-152 to 160] (LPH Specific Code) do not contain corruption, etc. If no problems are found, replace the following parts in sequence:

- MCU PWB (7525/30/35) (PL 18.2A)
- MCU PWB (7545/56) (PL 18.2B)
- LPH Unit (Y, M, C, K) (PL 2.1)

345-373 LPH Read Fault Multi

BSD-ON:-

Communication error between MCU and LPH Units (data read error from multiple LPHs)

NOTE: *When turning the power OFF, turn OFF the Power Switch first and then the Main Power Switch.*

Procedure

Turn the power OFF and remove the Rear Upper Cover. Turn the power ON.

Is the voltage between the MD PWB J532-4/8/12/16 (+) and the GND (-) +5VDC?

Y **N**

Go to +5VDC Power +5VDC Power RAP.

Is the voltage between the MD PWB J532-2/6/10/14 (+) and the GND (-) +1.8VDC?

Y **N**

Turn the power OFF and disconnect the MD PWB connector J532.

Measure the resistance between the MD PWB J532-2/6/10/14 and the Frame.

Is the resistance infinite for all?

Y **N**

Check the wires of the pins with non-infinite resistance for peeled-off coatings and short circuits due to pinching.

Replace the MD PWB.

- MD PWB (7525/30/35) (PL 18.2A)
- MD PWB (7545/56) (PL 18.2B)

Turn the power OFF and check the following connectors for open circuit, short circuit, and poor connection.

- Between MCU PWB P/J557 and LPH Rear PWB J561
- Between MCU PWB J556 and LPH Rear PWB J560
- Between MCU PWB J555 and LPH Rear PWB J559
- Between MCU PWB J554 and LPH Rear PWB J558

If no problems are found, replace the MCU PWB.

- MCU PWB (7525/30/35) (PL 18.2A)
- MCU PWB (7545/56) (PL 18.2B)

If the problem persists, refer to DC131 [749-001] (LPH Fail Color) to go to the appropriate RAP. (1: Error has occurred at Y, 2: Error has occurred at M, 4: Error has occurred at C, 8: Error has occurred at K)

- Y color: 361-362 RAP
- M color: 361-363 RAP
- C color: 361-364 RAP
- K color: 361-365 RAP

345-374 LPH Write Fault Multi

BSD-ON:-

Communication error between MCU and LPH Units (data write error to multiple LPHs).

NOTE: *When turning the power OFF, turn OFF the Power Switch first and then the Main Power Switch.*

Procedure

Turn the power OFF and remove the Rear Upper Cover. Turn the power ON.

Is the voltage between the MD PWB J532-4/8/12/16 (+) and the GND (-) +5VDC?

Y **N**

Go to +5VDC Power +5VDC Power RAP.

Is the voltage between the MD PWB J532-2/6/10/14 (+) and the GND (-) +1.8VDC?

Y **N**

Turn the power OFF and disconnect the MD PWB connector J532.

Measure the resistance between the MD PWB J532-2/6/10/14 and the Frame.

Is the resistance infinite for all?

Y **N**

Check the wires of the pins with non-infinite resistance for peeled-off coatings and short circuits due to pinching.

Replace the MD PWB.

- MD PWB (7525/30/35) (PL 18.2A)
- MD PWB (7545/56) (PL 18.2B)

Turn the power OFF and check the following connectors for open circuit, short circuit, and poor connection.

- Between MCU PWB P/J557 and LPH Rear PWB J561
- Between MCU PWB J556 and LPH Rear PWB J560
- Between MCU PWB J555 and LPH Rear PWB J559
- Between MCU PWB J554 and LPH Rear PWB J558

If no problems are found, replace the MCU PWB.

- MCU PWB (7525/30/35) (PL 18.2A)
- MCU PWB (7545/56) (PL 18.2B)

If the problem persists, refer to DC131 [749-001] (LPH Fail Color) to go to the appropriate RAP. (1: Error has occurred at Y, 2: Error has occurred at M, 4: Error has occurred at C, 8: Error has occurred at K)

- Y color: 361-366 RAP
- M color: 361-367 RAP
- C color: 361-368 RAP
- K color: 361-369 RAP

345-375 LPH Act Fault Multi

BSD-ON:-

Communication error between MCU and multiple LPH Units (error in the communication IC or cable).

NOTE: *When turning the power OFF, turn OFF the Power Switch first and then the Main Power Switch.*

Procedure

Turn the power OFF and remove the Rear Upper Cover. Turn the power ON.
Check the timing at when this Fail occurs. **Does this Fail occur right after the power is turned ON?**

Y **N**

If the failure occurs when the Drum is rotating, it is very likely due to the noise caused by high voltage leak. Check the Drum (Y, M, C, K) for improper installation

Is the voltage between the MD PWB J532-4/8/12/16 (+) and the GND (-) +5VDC?

Y **N**

Go to +5VDC Power +5VDC Power RAP.

Is the voltage between the MD PWB J532-2/6/10/14 (+) and the GND (-) +1.8VDC?

Y **N**

Turn the power OFF and disconnect the MD PWB connector J532.
Measure the resistance between the MD PWB J532-2/6/10/14 and the Frame.
Is the resistance infinite for all?

Y **N**

Check the wires of the pins with non-infinite resistance for peeled-off coatings and short circuits due to pinching.

Replace the MD PWB.

- MD PWB (7525/30/35) (PL 18.2A)
- MD PWB (7545/56) (PL 18.2B)

Turn the power OFF and check the following connectors for open circuit, short circuit, and poor connection.

- Between MCU PWB P/J557 and LPH Rear PWB J561
- Between MCU PWB J556 and LPH Rear PWB J560
- Between MCU PWB J555 and LPH Rear PWB J559
- Between MCU PWB J554 and LPH Rear PWB J558

If no problems are found, replace the MCU PWB.

- MCU PWB (7525/30/35) (PL 18.2A)
- MCU PWB (7545/56) (PL 18.2B)

If the problem persists, refer to DC131 [749-001] (LPH Fail Color) to go to the appropriate RAP.
(1: Error has occurred at Y, 2: Error has occurred at M, 4: Error has occurred at C, 8: Error has occurred at K)

- Y color: 361-370 RAP
- M color: 361-371 RAP
- C color: 361-372 RAP
- K color: 361-373 RAP

345-376 LPH PLL Lock Fault Multi

BSD-ON:-

LPH PLL lock mechanism failure (clock failures in multiple LPHs).

NOTE: *When turning the power OFF, turn OFF the Power Switch first and then the Main Power Switch.*

Procedure

Turn the power OFF and remove the Rear Upper Cover. Turn the power ON.

Is the voltage between the MD PWB J532 -4/8/12/16 (+) and the GND (-) +5VDC?

Y **N**

Go to +5VDC Power RAP.

Is the voltage between the MD PWB J532 -2/6/10/14 (+) and the GND (-) +1.8VDC?

Y **N**

Turn the power OFF and disconnect the MD PWB connector J532 .

Measure the resistance between the MD PWB J532 -2/6/10/14 and the Frame.

Is the resistance infinite for all?

Y **N**

Check the wires of the pins with non-infinite resistance for peeled-off coatings and short circuits due to pinching.

Replace the MD PWB.

- MD PWB (7525/30/35) (PL 18.2A)
- MD PWB (7545/56) (PL 18.2B)

Turn the power OFF and check the following connectors for open circuit, short circuit, and poor connection.

- Between MCU PWB P/J557 and LPH Rear PWB J561
- Between MCU PWB J556 and LPH Rear PWB J560
- Between MCU PWB J555 and LPH Rear PWB J559
- Between MCU PWB J554 and LPH Rear PWB J558

If no problems are found, replace the MCU PWB.

- MCU PWB (7525/30/35) (PL 18.2A)
- MCU PWB (7545/56) (PL 18.2B)

If the problem persists, refer to DC131 [749-001] (LPH Fail Color) to go to the appropriate RAP. (1: Error has occurred at Y, 2: Error has occurred at M, 4: Error has occurred at C, 8: Error has occurred at K)

- Y color: 361-386 RAP
- M color: 361-387 RAP
- C color: 361-388 RAP
- K color: 361-389 RAP

347-211 Exit 1 OCT Home Fault

BSD-ON:BSD 10.7 Fused Paper Exit 1

After the Exit 1 OCT Motor has run for the specified operation time, the Exit 1 OCT Home Position Sensor does not turn ON.

NOTE: *When turning the power OFF, turn OFF the Power Switch first and then the Main Power Switch.*

Initial Actions

- Check the Exit 1 OCT Home Position Sensor for improper installation, contamination, and etc.
- Check the Shielding Board, which blocks the detection section of the Exit 1 OCT Home Position Sensor, for damage and check the OCT Chute for improper installation.

Procedure

Turn the power ON and enter the Diag mode.
Turn ON dC330 [077-109]. Move the OCT Chute manually to block/clear the light path to the Exit 1 OCT Home Position Sensor. **Does the display change between High/Low?**

Y N

Use OF 99-1 RAP to check the Exit 1 OCT Home Position Sensor.

Press the Stop button. Turn ON dC330 [077-040] and dC330 [077-041] alternately.
Does the OCT 1 Chute move forward and backward?

Y N

Is the voltage between the MD PWB J524-3/4 (+) and the GND (-) +24VDC?

Y N

Go to +24VDC Power RAP (7525/30/35) +24VDC Power RAP or +24VDC Power RAP (7545/56) +24VDC Power RAP.

Turn the power OFF and check the Exit 1 OCT Motor Gear for blockage and the OCT Chute for damage. Also, check the connection between the MD PWB J524 and the Exit 1 OCT Motor J271 for open circuit, short circuit, and poor contact.
If no problems are found, replace the following parts in sequence:

- Exit 1 OCT Motor (PL 17.2)
- MD PWB (7525/30/35) (PL 18.2A)
- MD PWB (7545/56) (PL 18.2B)

Press the Stop button and turn the power OFF.
Replace the MD PWB.

- MD PWB (7525/30/35) (PL 18.2A)
- MD PWB (7545/56) (PL 18.2B)

347-212 Exit 2 OCT Home Fault

BSD-ON:BSD 10.9 Fused Paper Exit 2 (2 of 4)

After the Exit 2 OCT Motor has run for the specified operation time, the Exit 2 OCT Home Position Sensor does not turn ON.

NOTE: *When turning the power OFF, turn OFF the Power Switch first and then the Main Power Switch.*

Initial Actions

- Check the Exit 2 OCT Home Position Sensor for improper installation, contamination, and etc.
- Check the Shielding Board, which blocks the detection section of the Exit 2 OCT Home Position Sensor, for damage and check the OCT 2 Chute for improper installation.

Procedure

Turn the power ON and enter the Diag mode.
Turn ON dC330 [077-110]. Move the OCT 2 Chute manually to block/clear the light path to the Exit 2 OCT Home Position Sensor. **Does the display change between High/Low?**

Y N

Use Transmissive Sensor RAP OF 99-2 to check the Exit 2 OCT Home Position Sensor.

Press the Stop button. Turn ON dC330 [077-045] and dC330 [077-046] alternately.
Does the OCT 2 Chute move forward and backward?

Y N

Is the voltage between the MD PWB J522-A3/A4 (+) and the GND (-) +24VDC?

Y N

Go to +24VDC Power RAP (7525/30/35) +24VDC Power RAP or +24VDC Power RAP (7545/56) +24VDC Power RAP.

Turn the power OFF and check the Exit 2 OCT Motor Gear for blockage and the OCT 2 Chute for damage. Also, check the connection between the MD PWB J522 and the Exit 2 OCT Motor J266 for open circuit, short circuit, and poor contact.
If no problems are found, replace the following parts in sequence:

- Exit 2 OCT Motor (PL 17.5)
- MD PWB (7525/30/35) (PL 18.2A)
- MD PWB (7545/56) (PL 18.2B)

Press the Stop button and turn the power OFF.
Replace the MD PWB.

- MD PWB (7525/30/35) (PL 18.2A)
- MD PWB (7545/56) (PL 18.2B)

347-213 Finisher Type Mismatch

BSD-ON:BSD 3.6 PWB Communication (6 of 7)

System detect incorrect finisher type.

NOTE: *When turning the power OFF, turn OFF the Power Switch first and then the Main Power Switch.*

Cause/Action

1. Power down the machine.

   NOTE: *The Integrated Finisher is only applicable to the 7525/30/35 machines. If an Integrated Finisher is installed on a 7545/56 machine, perform the following:*

   a. Disconnect the Finisher

   b. Power up the machine

   c. Go to dC131 and set NVM location 742-869 to 0.

   d. Exit diagnostics

2. Turn the power OFF and connect a Finisher that is supported by this machine.

   a. Power up the machine

   b. Verify the fault has cleared

347-310 Finisher Communication Fault

BSD-ON:BSD 3.6 PWB Communication (6 of 7)

BSD-ON:BSD 1.9 Option DC Power Distribution

Communication failure between the Finisher and the IOT was detected.

NOTE: *When turning the power OFF, turn OFF the Power Switch first and then the Main Power Switch.*

Cause/Action

1. Turn the power OFF and ON.
2. Turn the power OFF and check the connection between the MD PWB J590/ J591 and the Finisher PWB for open circuit, short circuit, and poor contact. Also, check the power supply at the Finisher.

   If no problems are found, replace the following parts in sequence:

   - MD PWB (7525/30/35) (PL 18.2A)
   - MD PWB (7545/56) (PL 18.2B)
   - MCU PWB (7525/30/35) (PL 18.2A)
   - MCU PWB (7545/56) (PL 18.2B)

347-320 ALL Destination Tray Broken

BSD-ON:-

All Trays connected to the IOT have become unusable.

Cause/Action

Enter dC122 Fault History. Go to the RAP of the affected Output Tray.

361-350 LPH Power On Fault Y

BSD-ON:BSD 6.8 LPH Control (Y)

Power source system error during LPH batch download complete verification or poor connection of Flat Cable.

NOTE: *When turning the power OFF, turn OFF the Power Switch first and then the Main Power Switch.*

Cause/Action

Check the following:

- The connection between the MD PWB J532 and the LPH Rear PWB (Y) J553 for open circuit, short circuit, and poor contact
- The connection between the LPH H PWB (Y) J565 and the LPH (Y) J573 for open circuit, short circuit, and poor contact (connection within the LPH Unit)
- The Flat Cable between the MCU PWB P/J557 and the LPH Rear PWB (Y) J561 for open circuits, short circuits, and poor contacts (especially for short circuits between MCU PWB P/J557 pins-28/27 and LPH Rear PWB (Y) J561 pins-1/2)
- The Flat Cable between the LPH H PWB (Y) J569 and the LPH (Y) J577 for open circuits, short circuits, and poor contacts (connection within the LPH Unit)
- The connector (P/J581) between the LPH Rear PWB (Y) and the LPH H PWB (Y) for damage and foreign substances
- The LPH Unit (Y) for improper installation

If no problems are found, replace the following parts in sequence:

- LPH Unit (Y) (PL 2.1)
- LPH Cable Assembly (PL 2.2)
- LPH Rear PWB (Y) (PL 2.2)
- MD PWB (7525/30/35) (PL 18.2A)
- MD PWB (7545/56) (PL 18.2B)
- MCU PWB (7525/30/35) (PL 18.2A)
- MCU PWB (7545/56) (PL 18.2B)

361-351 LPH Power On Fault M

BSD-ON:BSD 6.9 LPH Control (M)

Power source system error during LPH batch download complete verification or poor connection of Flat Cable.

NOTE: *When turning the power OFF, turn OFF the Power Switch first and then the Main Power Switch.*

Cause/Action

Check the following:

- The connection between the MD PWB J532 and the LPH Rear PWB (M) J552 for open circuit, short circuit, and poor contact
- The connection between the LPH H PWB (M) J564 and the LPH (M) J572 for open circuit, short circuit, and poor contact (connection within the LPH Unit)
- The Flat Cable between the MCU PWB J556 and the LPH Rear PWB (M) J560 for open circuits, short circuits, and poor contacts (especially for short circuits between MCU PWB J556 pins-28/27 and LPH Rear PWB (M) J560 pins-1/2)
- The Flat Cable between the LPH H PWB (M) J568 and the LPH (M) J576 for open circuits, short circuits, and poor contacts (connection within the LPH Unit)
- The connector (P/J580) between the LPH Rear PWB (M) and the LPH H PWB (M) for damage and foreign substances
- The LPH Unit (M) for improper installation

If no problems are found, replace the following parts in sequence:

- LPH Unit (M) (PL 2.1)
- LPH Cable Assembly (PL 2.2)
- LPH Rear PWB (M) (PL 2.2)
- MD PWB (7525/30/35) (PL 18.2A)
- MD PWB (7545/56) (PL 18.2B)
- MCU PWB (7525/30/35) (PL 18.2A)
- MCU PWB (7545/56) (PL 18.2B)

361-352 LPH Power On Fault C

BSD-ON:BSD 6.10 LPH Control (C)

Power source system error during LPH batch download complete verification or poor connection of Flat Cable.

NOTE: *When turning the power OFF, turn OFF the Power Switch first and then the Main Power Switch.*

Cause/Action

Check the following:

- The connection between the MD PWB J532 and the LPH Rear PWB (C) J551 for open circuit, short circuit, and poor contact
- The connection between the LPH H PWB (C) J563 and the LPH (C) J571 for open circuit, short circuit, and poor contact (connection within the LPH Unit)
- The Flat Cable between the MCU PWB J555 and the LPH Rear PWB (C) J559 for open circuits, short circuits, and poor contacts (especially for short circuits between MCU PWB J555 pins-28/27 and LPH Rear PWB (C) J559 pins-1/2)
- The Flat Cable between the LPH H PWB (C) J567 and the LPH (C) J575 for open circuits, short circuits, and poor contacts (connection within the LPH Unit)
- The connector (P/J579) between the LPH Rear PWB (C) and the LPH H PWB (C) for damage and foreign substances
- The LPH Unit (C) for improper installation

If no problems are found, replace the following parts in sequence:

- LPH Unit (C) (PL 2.1)
- LPH Cable Assembly (PL 2.2)
- LPH Rear PWB (C) (PL 2.2)
- MD PWB (7525/30/35) (PL 18.2A)
- MD PWB (7545/56) (PL 18.2B)
- MCU PWB (7525/30/35) (PL 18.2A)
- MCU PWB (7545/56) (PL 18.2B)

361-353 LPH Power On Fault K

BSD-ON:BSD 6.11 LPH Control (K)

Power source system error during LPH batch download complete verification or poor connection of Flat Cable.

NOTE: *When turning the power OFF, turn OFF the Power Switch first and then the Main Power Switch.*

Cause/Action

Check the following:

- The connection between the MD PWB J532 and the LPH Rear PWB (K) J550 for open circuit, short circuit, and poor contact
- The connection between the LPH H PWB (K) J562 and the LPH (K) J570 for open circuit, short circuit, and poor contact (connection within the LPH Unit)
- The Flat Cable between the MCU PWB J554 and the LPH Rear PWB (K) J558 for open circuits, short circuits, and poor contacts (especially for short circuits between MCU PWB J554 pins-28/27 and LPH Rear PWB (K) J558 pins-1/2)
- The Flat Cable between the LPH H PWB (K) J566 and the LPH (K) J574 for open circuits, short circuits, and poor contacts (connection within the LPH Unit)
- The connector (P/J578) between the LPH Rear PWB (K) and the LPH H PWB (K) for damage and foreign substances
- The LPH Unit (K) for improper installation

If no problems are found, replace the following parts in sequence:

- LPH Unit (K) (PL 2.1)
- LPH Cable Assembly (PL 2.2)
- LPH Rear PWB (K) (PL 2.2)
- MD PWB (7525/30/35) (PL 18.2A)
- MD PWB (7545/56) (PL 18.2B)
- MCU PWB (7525/30/35) (PL 18.2A)
- MCU PWB (7545/56) (PL 18.2B)

361-354 LPH Download Data Fault Y

BSD-ON:BSD 6.8 LPH Control (Y)

DELSOL register data error during the LPH batch download complete verification, download error, or connector error.

NOTE: *When turning the power OFF, turn OFF the Power Switch first and then the Main Power Switch.*

Cause/Action

Check the following:

- The Flat Cable between the MCU PWB P/J557 and the LPH Rear PWB (Y) J561 for open circuits, short circuits, and poor contacts
- The Flat Cable between the LPH H PWB (Y) J569 and the LPH (Y) J577 for open circuits, short circuits, and poor contacts (connection within the LPH Unit)
- The connector (P/J581) between the LPH Rear PWB (Y) and the LPH H PWB (Y) for damage and foreign substances
- The LPH Unit (Y) for improper installation

If no problems are found, replace the following parts in sequence:

- LPH Unit (Y) (PL 2.1)
- LPH Cable Assembly (PL 2.2)
- LPH Rear PWB (Y) (PL 2.2)
- MCU PWB (7525/30/35) (PL 18.2A)
- MCU PWB (7545/56) (PL 18.2B)

361-355 LPH Download Data Fault M

BSD-ON:BSD 6.9 LPH Control (M)

DELSOL register data error during the LPH batch download complete verification, download error, or connector error.

NOTE: *When turning the power OFF, turn OFF the Power Switch first and then the Main Power Switch.*

Cause/Action

Check the following:

- The Flat Cable between the MCU PWB J556 and the LPH Rear PWB (M) J560 for open circuits, short circuits, and poor contacts
- The Flat Cable between the LPH H PWB (M) J568 and the LPH (M) J576 for open circuits, short circuits, and poor contacts (connection within the LPH Unit)
- The connector (P/J580) between the LPH Rear PWB (M) and the LPH H PWB (M) for damage and foreign substances
- The LPH Unit (M) for improper installation

If no problems are found, replace the following parts in sequence:

- LPH Unit (M) (PL 2.1)
- LPH Cable Assembly (PL 2.2)
- LPH Rear PWB (M) (PL 2.2)
- MCU PWB (7525/30/35) (PL 18.2A)
- MCU PWB (7545/56) (PL 18.2B)

361-356 LPH Download Data Fault C

BSD-ON:BSD 6.10 LPH Control (C)

DELSOL register data error during the LPH batch download complete verification, download error, or connector error.

NOTE: *When turning the power OFF, turn OFF the Power Switch first and then the Main Power Switch.*

Cause/Action

Check the following:

- The Flat Cable between the MCU PWB J555 and the LPH Rear PWB (C) J559 for open circuits, short circuits, and poor contacts
- The Flat Cable between the LPH H PWB (C) J567 and the LPH (C) J575 for open circuits, short circuits, and poor contacts (connection within the LPH Unit)
- The connector (P/J579) between the LPH Rear PWB (C) and the LPH H PWB (C) for damage and foreign substances
- The LPH Unit (C) for improper installation

If no problems are found, replace the following parts in sequence:

- Use Software Versions (dC108) to verify the most current software is installed.
  - If a software upgrade is necessary go to GP 9.
- LPH Unit (C) (PL 2.1)
- LPH Cable Assembly (PL 2.2)
- LPH Rear PWB (C) (PL 2.2)
- MCU PWB (7525/30/35) (PL 18.2A)
- MCU PWB (7545/56) (PL 18.2B)

361-357 LPH Download Data Fault K

BSD-ON:BSD 6.11 LPH Control (K)

DELSOL register data error during the LPH batch download complete verification, download error, or connector error.

NOTE: *When turning the power OFF, turn OFF the Power Switch first and then the Main Power Switch.*

Cause/Action

Check the following:

- The Flat Cable between the MCU PWB J554 and the LPH Rear PWB (K) J558 for open circuits, short circuits, and poor contacts
- The Flat Cable between the LPH H PWB (K) J566 and the LPH (K) J574 for open circuits, short circuits, and poor contacts (connection within the LPH Unit)
- The connector (P/J578) between the LPH Rear PWB (K) and the LPH H PWB (K) for damage and foreign substances
- The LPH Unit (K) for improper installation

If no problems are found, replace the following parts in sequence:

- Use Software Versions (dC108) to verify the most current software is installed.
  - If a software upgrade is necessary go to GP 9.
- LPH Unit (K) (PL 2.1)
- LPH Cable Assembly (PL 2.2)
- LPH Rear PWB (K) (PL 2.2)
- MCU PWB (7525/30/35) (PL 18.2A)
- MCU PWB (7545/56) (PL 18.2B)

361-358 LPH Mismatch Fault Y

BSD-ON:BSD 6.8 LPH Control (Y)

The model number of the LPH Unit (Y) does not match.

NOTE: *When turning the power OFF, turn OFF the Power Switch first and then the Main Power Switch.*

Cause/Action

Check the following:

- Check that the values in DC131 [749-157] (LPH Specific Code 4Y) do not contain corruption, etc.
- Use Software Versions (dC108) to verify the most current software is installed.
  - If a software upgrade is necessary go to GP 9.

If no problems are found, replace the LPH Unit (Y) (PL 2.1).

361-359 LPH Mismatch Fault M

BSD-ON:BSD 6.9 LPH Control (M)

The model number of the LPH Unit (M) does not match.

NOTE: *When turning the power OFF, turn OFF the Power Switch first and then the Main Power Switch.*

Cause/Action

Check the following:

- Check that the values in DC131 [749-158] (LPH Specific Code 4M) do not contain corruption, etc.
- Use Software Versions (dC108) to verify the most current software is installed.
  - If a software upgrade is necessary go to GP 9.

If no problems are found, replace the LPH Unit (M) (PL 2.1).

361-360 LPH Mismatch Fault C

BSD-ON:BSD 6.10 LPH Control (C)

The model number of the LPH Unit (C) does not match.

NOTE: *When turning the power OFF, turn OFF the Power Switch first and then the Main Power Switch.*

Cause/Action

Check the following:

- Check that the values in DC131 [749-159] (LPH Specific Code 4C) do not contain corruption, etc.
- Use Software Versions (dC108) to verify the most current software is installed.
  - If a software upgrade is necessary go to GP 9.

If no problems are found, replace the LPH Unit (C) (PL 2.1).

361-361 LPH Mismatch Fault K

BSD-ON:BSD 6.11 LPH Control (K)

The model number of the LPH Unit (K) does not match.

NOTE: *When turning the power OFF, turn OFF the Power Switch first and then the Main Power Switch.*

Cause/Action

Check the following:

- Check that the values in DC131 [749-160] (LPH Specific Code 4K) do not contain corruption, etc.
- Use Software Versions (dC108) to verify the most current software is installed.
  - If a software upgrade is necessary go to GP 9.

If no problems are found, replace the LPH Unit (K) (PL 2.1).

361-362 LPH Read Fault Y

BSD-ON:BSD 6.8 LPH Control (Y)

Communication error between MCU and LPH Unit (Y) (data read error from LPH)

NOTE: *When turning the power OFF, turn OFF the Power Switch first and then the Main Power Switch.*

Cause/Action

Check the following:

- The Flat Cable between the MCU PWB P/J557 and the LPH Rear PWB (Y) J561 for open circuits, short circuits, and poor contacts
- The Flat Cable between the LPH H PWB (Y) J569 and the LPH (Y) J577 for open circuits, short circuits, and poor contacts (connection within the LPH Unit)
- The connector (P/J581) between the LPH Rear PWB (Y) and the LPH H PWB (Y) for damage and foreign substances
- The LPH Unit (Y) for improper installation
- The Drum/Dev Drive Motor (Y, M, C) for improper installation (affected by the noises caused by improper installation)

If no problems are found, replace the following parts in sequence:

- LPH Unit (Y) (PL 2.1)
- LPH Cable Assembly (PL 2.2)
- LPH Rear PWB (Y) (PL 2.2)
- MCU PWB (7525/30/35) (PL 18.2A)
- MCU PWB (7545/56) (PL 18.2B)

361-363 LPH Read Fault M

BSD-ON:BSD 6.9 LPH Control (M)

Communication error between MCU and LPH Unit (M) (data read error from LPH)

NOTE: *When turning the power OFF, turn OFF the Power Switch first and then the Main Power Switch.*

Cause/Action

Check the following:

- The Flat Cable between the MCU PWB J556 and the LPH Rear PWB (M) J560 for open circuits, short circuits, and poor contacts
- The Flat Cable between the LPH H PWB (M) J568 and the LPH (M) J576 for open circuits, short circuits, and poor contacts (connection within the LPH Unit)
- The connector (P/J580) between the LPH Rear PWB (M) and the LPH H PWB (M) for damage and foreign substances
- The LPH Unit (M) for improper installation
- The Drum/Dev Drive Motor (Y, M, C) for improper installation (affected by the noises caused by improper installation)

If no problems are found, replace the following parts in sequence:

- LPH Unit (M) (PL 2.1)
- LPH Cable Assembly (PL 2.2)
- LPH Rear PWB (M) (PL 2.2)
- MCU PWB (7525/30/35) (PL 18.2A)
- MCU PWB (7545/56) (PL 18.2B)

361-364 LPH Read Fault C

BSD-ON:BSD 6.10 LPH Control (C)

Communication error between MCU and LPH Unit (C) (data read error from LPH)

NOTE: *When turning the power OFF, turn OFF the Power Switch first and then the Main Power Switch.*

Cause/Action

Check the following:

- The Flat Cable between the MCU PWB J555 and the LPH Rear PWB (C) J559 for open circuits, short circuits, and poor contacts
- The Flat Cable between the LPH H PWB (C) J567 and the LPH (C) J575 for open circuits, short circuits, and poor contacts (connection within the LPH Unit)
- The connector (P/J579) between the LPH Rear PWB (C) and the LPH H PWB (C) for damage and foreign substances
- The LPH Unit (C) for improper installation
- The Drum/Dev Drive Motor (Y, M, C) for improper installation (affected by the noises caused by improper installation)

If no problems are found, replace the following parts in sequence:

- LPH Unit (C) (PL 2.1)
- LPH Cable Assembly (PL 2.2)
- LPH Rear PWB (C) (PL 2.2)
- MCU PWB (7525/30/35) (PL 18.2A)
- MCU PWB (7545/56) (PL 18.2B)

361-365 LPH Read Fault K

BSD-ON:BSD 6.11 LPH Control (K)

Communication error between MCU and LPH Unit (K) (data read error from LPH)

NOTE: *When turning the power OFF, turn OFF the Power Switch first and then the Main Power Switch.*

Cause/Action

Check the following:

- The Flat Cable between the MCU PWB J554 and the LPH Rear PWB (K) J558 for open circuits, short circuits, and poor contacts
- The Flat Cable between the LPH H PWB (K) J566 and the LPH (K) J574 for open circuits, short circuits, and poor contacts (connection within the LPH Unit)
- The connector (P/J578) between the LPH Rear PWB (K) and the LPH H PWB (K) for damage and foreign substances
- The LPH Unit (K) for improper installation
- The Drum/Dev Drive Motor (Y, M, C) for improper installation (affected by the noises caused by improper installation)

If no problems are found, replace the following parts in sequence:

- LPH Unit (K) (PL 2.1)
- LPH Cable Assembly (PL 2.2)
- LPH Rear PWB (K) (PL 2.2)
- MCU PWB (7525/30/35) (PL 18.2A)
- MCU PWB (7545/56) (PL 18.2B)

361-366 LPH Write Fault Y

BSD-ON:BSD 6.8 LPH Control (Y)

Communication error between MCU and LPH Unit (Y) (data write error to LPH).

NOTE: *When turning the power OFF, turn OFF the Power Switch first and then the Main Power Switch.*

Procedure

Refer to DC131 [749-046] (Write Retry Data Y). **Is the value of DC131 [749-046] (Write Retry Data Y) "0"?**

Y N

Check the following:

- The Flat Cable between the MCU PWB P/J557 and the LPH Rear PWB (Y) J561 for open circuits, short circuits, and poor contacts
- The Flat Cable between the LPH H PWB (Y) J569 and the LPH (Y) J577 for open circuits, short circuits, and poor contacts (connection within the LPH Unit)
- The connector (P/J581) between the LPH Rear PWB (Y) and the LPH H PWB (Y) for damage and foreign substances
- The LPH Unit (Y) for improper installation
- The Drum/Dev Drive Motor (Y, M, C) for improper installation (affected by the noises caused by improper installation)
- The NVM value for corruption

If no problems are found, replace the following parts in sequence:

- LPH Unit (Y) (PL 2.1)
- LPH Cable Assembly (PL 2.2)
- LPH Rear PWB (Y) (PL 2.2)
- MCU PWB (7525/30/35) (PL 18.2A)
- MCU PWB (7545/56) (PL 18.2B)

Check the following:

- The connection between the MD PWB J532 and the LPH Rear PWB (Y) J553 for open circuit, short circuit, and poor contact
- The connection between the LPH H PWB (Y) J565 and the LPH (Y) J573 for open circuit, short circuit, and poor contact (connection within the LPH Unit)
- The connector (P/J581) between the LPH Rear PWB (Y) and the LPH H PWB (Y) for damage and foreign substances
- The LPH Unit (Y) for improper installation

If no problems are found, replace the following parts in sequence:

- LPH Unit (Y) (PL 2.1)
- LPH Cable Assembly (PL 2.2)
- LPH Rear PWB (Y) (PL 2.2)
- MD PWB (7525/30/35) (PL 18.2A)
- MD PWB (7545/56) (PL 18.2B)
- MCU PWB (7525/30/35) (PL 18.2A)
- MCU PWB (7545/56) (PL 18.2B)

361-367 LPH Write Fault M

BSD-ON:BSD 6.9 LPH Control (M)

Communication error between MCU and LPH Unit (M) (data write error to LPH).

NOTE: *When turning the power OFF, turn OFF the Power Switch first and then the Main Power Switch.*

Procedure

Refer to DC131 [749-047] (Write Retry Data M). **Is the value of DC131 [749-047] (Write Retry Data M) "0"?**

Y N

Check the following:

- The Flat Cable between the MCU PWB J556 and the LPH Rear PWB (M) J560 for open circuits, short circuits, and poor contacts
- The Flat Cable between the LPH H PWB (M) J568 and the LPH (M) J576 for open circuits, short circuits, and poor contacts (connection within the LPH Unit)
- The connector (P/J580) between the LPH Rear PWB (M) and the LPH H PWB (M) for damage and foreign substances
- The LPH Unit (M) for improper installation
- The Drum/Dev Drive Motor (Y, M, C) for improper installation (affected by the noises caused by improper installation)
- The NVM value for corruption

If no problems are found, replace the following parts in sequence:

- LPH Unit (M) (PL 2.1)
- LPH Cable Assembly (PL 2.2)
- LPH Rear PWB (M) (PL 2.2)
- MCU PWB (7525/30/35) (PL 18.2A)
- MCU PWB (7545/56) (PL 18.2B)

Check the following:

- The connection between the MD PWB J532 and the LPH Rear PWB (M) J552 for open circuit, short circuit, and poor contact
- The connection between the LPH H PWB (M) J564 and the LPH (M) J572 for open circuit, short circuit, and poor contact (connection within the LPH Unit)
- The connector (P/J580) between the LPH Rear PWB (M) and the LPH H PWB (M) for damage and foreign substances
- The LPH Unit (M) for improper installation

If no problems are found, replace the following parts in sequence:

- LPH Unit (M) (PL 2.1)
- LPH Cable Assembly (PL 2.2)
- LPH Rear PWB (M) (PL 2.2)
- MD PWB (7525/30/35) (PL 18.2A)
- MD PWB (7545/56) (PL 18.2B)
- MCU PWB (7525/30/35) (PL 18.2A)
- MCU PWB (7545/56) (PL 18.2B)

361-368 LPH Write Fault C

BSD-ON:BSD 6.10 LPH Control (C)

Communication error between MCU and LPH Unit (C) (data write error to LPH).

NOTE: *When turning the power OFF, turn OFF the Power Switch first and then the Main Power Switch.*

Procedure

Refer to DC131 [749-048] (Write Retry Data C). **Is the value of DC131 [749-048] (Write Retry Data C) "0"?**

Y N

Check the following:

- The Flat Cable between the MCU PWB J555 and the LPH Rear PWB (C) J559 for open circuits, short circuits, and poor contacts
- The Flat Cable between the LPH H PWB (C) J567 and the LPH (C) J575 for open circuits, short circuits, and poor contacts (connection within the LPH Unit)
- The connector (P/J579) between the LPH Rear PWB (C) and the LPH H PWB (C) for damage and foreign substances
- The LPH Unit (C) for improper installation
- The Drum/Dev Drive Motor (Y, M, C) for improper installation (affected by the noises caused by improper installation)
- The NVM value for corruption

If no problems are found, replace the following parts in sequence:

- LPH Unit (C) (PL 2.1)
- LPH Cable Assembly (PL 2.2)
- LPH Rear PWB (C) (PL 2.2)
- MCU PWB (7525/30/35) (PL 18.2A)
- MCU PWB (7545/56) (PL 18.2B)

Check the following:

- The connection between the MD PWB J532 and the LPH Rear PWB (C) J551 for open circuit, short circuit, and poor contact
- The connection between the LPH H PWB (C) J563 and the LPH (C) J571 for open circuit, short circuit, and poor contact (connection within the LPH Unit)
- The connector (P/J579) between the LPH Rear PWB (C) and the LPH H PWB (C) for damage and foreign substances
- The LPH Unit (C) for improper installation

If no problems are found, replace the following parts in sequence:

- LPH Unit (C) (PL 2.1)
- LPH Cable Assembly (PL 2.2)
- LPH Rear PWB (C) (PL 2.2)
- MD PWB (7525/30/35) (PL 18.2A)
- MD PWB (7545/56) (PL 18.2B)
- MCU PWB (7525/30/35) (PL 18.2A)
- MCU PWB (7545/56) (PL 18.2B)

361-369 LPH Write Fault K

BSD-ON:BSD 6.11 LPH Control (K)

Communication error between MCU and LPH Unit (K) (data write error to LPH).

NOTE: *When turning the power OFF, turn OFF the Power Switch first and then the Main Power Switch.*

Procedure

Refer to DC131 [749-049] (Write Retry Data K). **Is the value of DC131 [749-049] (Write Retry Data K) "0"?**

Y N

Check the following:

- The Flat Cable between the MCU PWB J554 and the LPH Rear PWB (K) J558 for open circuits, short circuits, and poor contacts
- The Flat Cable between the LPH H PWB (K) J566 and the LPH (K) J574 for open circuits, short circuits, and poor contacts (connection within the LPH Unit)
- The connector (P/J578) between the LPH Rear PWB (K) and the LPH H PWB (K) for damage and foreign substances
- The LPH Unit (K) for improper installation
- The Drum/Dev Drive Motor (Y, M, C) for improper installation (affected by the noises caused by improper installation)
- The NVM value for corruption

If no problems are found, replace the following parts in sequence:

- LPH Unit (K) (PL 2.1)
- LPH Cable Assembly (PL 2.2)
- LPH Rear PWB (K) (PL 2.2)
- MCU PWB (7525/30/35) (PL 18.2A)
- MCU PWB (7545/56) (PL 18.2B)

Check the following:

- The connection between the MD PWB J532 and the LPH Rear PWB (K) J550 for open circuit, short circuit, and poor contact
- The connection between the LPH H PWB (K) J562 and the LPH (K) J570 for open circuit, short circuit, and poor contact (connection within the LPH Unit)
- The connector (P/J578) between the LPH Rear PWB (K) and the LPH H PWB (K) for damage and foreign substances
- The LPH Unit (K) for improper installation

If no problems are found, replace the following parts in sequence:

- LPH Unit (K) (PL 2.1)
- LPH Cable Assembly (PL 2.2)
- LPH Rear PWB (K) (PL 2.2)
- MD PWB (7525/30/35) (PL 18.2A)
- MD PWB (7545/56) (PL 18.2B)
- MCU PWB (7525/30/35) (PL 18.2A)
- MCU PWB (7545/56) (PL 18.2B)

361-370 LPH Act Fault Y

BSD-ON:BSD 6.8 LPH Control (Y)

Communication error between MCU and LPH Unit (Y) (error in the communication IC or cable).

NOTE: *When turning the power OFF, turn OFF the Power Switch first and then the Main Power Switch.*

Procedure

Check the timing at when this Fail occurs. **Does this Fail occur right after the power is turned ON?**

Y N

If the Fail occurs when the Drum is rotating, it is very likely due to the noise caused by high voltage leak. Check the Drum (Y, M, C, K) for improper installation.

Check the following:

- The Flat Cable between the MCU PWB P/J557 and the LPH Rear PWB (Y) J561 for open circuits, short circuits, and poor contacts
- The Flat Cable between the LPH H PWB (Y) J569 and the LPH (Y) J577 for open circuits, short circuits, and poor contacts (connection within the LPH Unit)
- The connector (P/J581) between the LPH Rear PWB (Y) and the LPH H PWB (Y) for damage and foreign substances
- The LPH Unit (Y) for improper installation
- The Drum/Dev Drive Motor (Y, M, C) for improper installation (affected by the noises caused by improper installation)

If no problems are found, replace the following parts in sequence:

- LPH Unit (Y) (PL 2.1)
- LPH Cable Assembly (PL 2.2)
- LPH Rear PWB (Y) (PL 2.2)
- MCU PWB (7525/30/35) (PL 18.2A)
- MCU PWB (7545/56) (PL 18.2B)

361-371 LPH Act Fault M

BSD-ON:BSD 6.9 LPH Control (M)

Communication error between MCU and LPH Unit (M) (error in the communication IC or cable).

NOTE: *When turning the power OFF, turn OFF the Power Switch first and then the Main Power Switch.*

Procedure

Check the timing at when this Fail occurs. **Does this Fail occur right after the power is turned ON?**

Y N

If the Fail occurs when the Drum is rotating, it is very likely due to the noise caused by high voltage leak. Check the Drum (Y, M, C, K) for improper installation.

Check the following:

- The Flat Cable between the MCU PWB J556 and the LPH Rear PWB (M) J560 for open circuits, short circuits, and poor contacts
- The Flat Cable between the LPH H PWB (M) J568 and the LPH (M) J576 for open circuits, short circuits, and poor contacts (connection within the LPH Unit)
- The connector (P/J580) between the LPH Rear PWB (M) and the LPH H PWB (M) for damage and foreign substances
- The LPH Unit (M) for improper installation
- The Drum/Dev Drive Motor (Y, M, C) for improper installation (affected by the noises caused by improper installation)

If no problems are found, replace the following parts in sequence:

- LPH Unit (M) (PL 2.1)
- LPH Cable Assembly (PL 2.2)
- LPH Rear PWB (M) (PL 2.2)
- MCU PWB (7525/30/35) (PL 18.2A)
- MCU PWB (7545/56) (PL 18.2B)

361-372 LPH Act Fault C

BSD-ON:BSD 6.10 LPH Control (C)

Communication error between MCU and LPH Unit (C) (error in the communication IC or cable).

NOTE: *When turning the power OFF, turn OFF the Power Switch first and then the Main Power Switch.*

Procedure

Check the timing at when this Fail occurs. **Does this Fail occur right after the power is turned ON?**

Y N

If the Fail occurs when the Drum is rotating, it is very likely due to the noise caused by high voltage leak. Check the Drum (Y, M, C, K) for improper installation

Check the following:

- The Flat Cable between the MCU PWB J555 and the LPH Rear PWB (C) J559 for open circuits, short circuits, and poor contacts
- The Flat Cable between the LPH H PWB (C) J567 and the LPH (C) J575 for open circuits, short circuits, and poor contacts (connection within the LPH Unit)
- The connector (P/J579) between the LPH Rear PWB (C) and the LPH H PWB (C) for damage and foreign substances
- The LPH Unit (C) for improper installation
- The Drum/Dev Drive Motor (Y, M, C) for improper installation (affected by the noises caused by improper installation)

If no problems are found, replace the following parts in sequence:

- LPH Unit (C) (PL 2.1)
- LPH Cable Assembly (PL 2.2)
- LPH Rear PWB (C) (PL 2.2)
- MCU PWB (7525/30/35) (PL 18.2A)
- MCU PWB (7545/56) (PL 18.2B)

361-373 LPH Act Fault K

BSD-ON:BSD 6.11 LPH Control (K)

Communication error between MCU and LPH Unit (K) (error in the communication IC or cable).

NOTE: *When turning the power OFF, turn OFF the Power Switch first and then the Main Power Switch.*

Procedure

Check the timing at when this Fail occurs. **Does this Fail occur right after the power is turned ON?**

Y N

If the Fail occurs when the Drum is rotating, it is very likely due to the noise caused by high voltage leak. Check the Drum (Y, M, C, K) for improper installation.

Check the following:

- The Flat Cable between the MCU PWB J554 and the LPH Rear PWB (K) J558 for open circuits, short circuits, and poor contacts
- The Flat Cable between the LPH H PWB (K) J566 and the LPH (K) J574 for open circuits, short circuits, and poor contacts (connection within the LPH Unit)
- The connector (P/J578) between the LPH Rear PWB (K) and the LPH H PWB (K) for damage and foreign substances
- The LPH Unit (K) for improper installation
- The Drum/Dev Drive Motor (Y, M, C) for improper installation (affected by the noises caused by improper installation)

If no problems are found, replace the following parts in sequence:

- LPH Unit (K) (PL 2.1)
- LPH Cable Assembly (PL 2.2)
- LPH Rear PWB (K) (PL 2.2)
- MCU PWB (7525/30/35) (PL 18.2A)
- MCU PWB (7545/56) (PL 18.2B)

361-374 LPH Chip Fault Y

BSD-ON:BSD 6.8 LPH Control (Y)

Open circuit detected in LPH Unit (Y) (open circuit between DELSOL and SLED).

NOTE: *•Because this Fail is detected for each color at every cycle-up, perform at least four jobs after turning the power OFF and ON.*

- *When turning the power OFF, turn OFF the Power Switch first and then the Main Power Switch.*

Procedure

Enter DC122 Fail History. Check whether any Fail related to connection failure of the Flat Cable between the MCU PWB P/J557 and the LPH Rear PWB (Y) J561 has occurred.

Has any Chain No. 361 Fail (other than LPH Chip Fail) occurred?

Y **N**

Replace the LPH Unit (Y) (PL 2.1).

Go to the appropriate RAP

361-375 LPH Chip Fault M

BSD-ON:BSD 6.9 LPH Control (M)

Open circuit detected in LPH Unit (M) (open circuit between DELSOL and SLED).

NOTE: *•Because this Fail is detected for each color at every cycle-up, perform at least four jobs after turning the power OFF and ON.*

- *When turning the power OFF, turn OFF the Power Switch first and then the Main Power Switch.*

Procedure

Enter DC122 Fail History. Check whether any Fail related to connection failure of the Flat Cable between the MCU PWB J556 and the LPH Rear PWB (M) J560 has occurred.

Has any Chain No. 361 Fail (other than LPH Chip Fail) occurred?

Y **N**

Replace the LPH Unit (M) (PL 2.1).

Go to the appropriate RAP

361-376 LPH Chip Fault C

BSD-ON:BSD 6.10 LPH Control (C)

Open circuit detected in LPH Unit (C) (open circuit between DELSOL and SLED).

NOTE: *•Because this Fail is detected for each color at every cycle-up, perform at least four jobs after turning the power OFF and ON.*

- *When turning the power OFF, turn OFF the Power Switch first and then the Main Power Switch.*

Procedure

Enter DC122 Fail History. Check whether any Fail related to connection failure of the Flat Cable between the MCU PWB J555 and the LPH Rear PWB (C) J559 has occurred.

Has any Chain No. 361 Fail (other than LPH Chip Fail) occurred?

Y **N**

Replace the LPH Unit (C) (PL 2.1).

Go to the appropriate RAP

361-377 LPH Chip Fault K

BSD-ON:BSD 6.11 LPH Control (K)

Open circuit detected in LPH Unit (K) (open circuit between DELSOL and SLED).

NOTE: *•Because this Fail is detected for each color at every cycle-up, perform at least four jobs after turning the power OFF and ON.*

- *When turning the power OFF, turn OFF the Power Switch first and then the Main Power Switch.*

Procedure

Enter DC122 Fail History. Check whether any Fail related to connection failure of the Flat Cable between the MCU PWB J554 and the LPH Rear PWB (K) J558 has occurred.

Has any Chain No. 361 Fail (other than LPH Chip Fail) occurred?

Y **N**

Replace the LPH Unit (K) (PL 2.1).

Go to the appropriate RAP

361-378 LPH Ltrg Fault Y

BSD-ON:BSD 6.8 LPH Control (Y)

The Ltrg signal (image synchronization signal) failure was detected.

NOTE: *When turning the power OFF, turn OFF the Power Switch first and then the Main Power Switch.*

Cause/Action

Check the following:

- The Flat Cable between the MCU PWB P/J557 and the LPH Rear PWB (Y) J561 for open circuits, short circuits, and poor contacts
- The Flat Cable between the LPH H PWB (Y) J569 and the LPH (Y) J577 for open circuits, short circuits, and poor contacts (connection within the LPH Unit)
- The connector (P/J581) between the LPH Rear PWB (Y) and the LPH H PWB (Y) for damage and foreign substances
- The LPH Unit (Y) for improper installation

If no problems are found, replace the following parts in sequence:

- LPH Unit (Y) (PL 2.1)
- LPH Cable Assembly (PL 2.2)
- LPH Rear PWB (Y) (PL 2.2)
- MCU PWB (7525/30/35) (PL 18.2A)
- MCU PWB (7545/56) (PL 18.2B)

361-379 LPH Ltrg Fault M

BSD-ON:BSD 6.9 LPH Control (M)

The Ltrg signal (image synchronization signal) failure was detected.

NOTE: *When turning the power OFF, turn OFF the Power Switch first and then the Main Power Switch.*

Cause/Action

Check the following:

- The Flat Cable between the MCU PWB J556 and the LPH Rear PWB (M) J560 for open circuits, short circuits, and poor contacts
- The Flat Cable between the LPH H PWB (M) J568 and the LPH (M) J576 for open circuits, short circuits, and poor contacts (connection within the LPH Unit)
- The connector (P/J580) between the LPH Rear PWB (M) and the LPH H PWB (M) for damage and foreign substances
- The LPH Unit (M) for improper installation

If no problems are found, replace the following parts in sequence:

- LPH Unit (M) (PL 2.1)
- LPH Cable Assembly (PL 2.2)
- LPH Rear PWB (M) (PL 2.2)
- MCU PWB (7525/30/35) (PL 18.2A)
- MCU PWB (7545/56) (PL 18.2B)

361-384 LPH Ltrg Fault C

BSD-ON:BSD 6.10 LPH Control (C)

The Ltrg signal (image synchronization signal) failure was detected.

NOTE: *When turning the power OFF, turn OFF the Power Switch first and then the Main Power Switch.*

Cause/Action

Check the following:

- The Flat Cable between the MCU PWB J555 and the LPH Rear PWB (C) J559 for open circuits, short circuits, and poor contacts
- The Flat Cable between the LPH H PWB (C) J567 and the LPH (C) J575 for open circuits, short circuits, and poor contacts (connection within the LPH Unit)
- The connector (P/J579) between the LPH Rear PWB (C) and the LPH H PWB (C) for damage and foreign substances
- The LPH Unit (C) for improper installation

If no problems are found, replace the following parts in sequence:

- LPH Unit (C) (PL 2.1)
- LPH Cable Assembly (PL 2.2)
- LPH Rear PWB (C) (PL 2.2)
- MCU PWB (7525/30/35) (PL 18.2A)
- MCU PWB (7545/56) (PL 18.2B)

361-385 LPH Ltrg Fault K

BSD-ON:BSD 6.11 LPH Control (K)

The Ltrg signal (image synchronization signal) failure was detected.

NOTE: *When turning the power OFF, turn OFF the Power Switch first and then the Main Power Switch.*

Cause/Action

Check the following:

- The Flat Cable between the MCU PWB J554 and the LPH Rear PWB (K) J558 for open circuits, short circuits, and poor contacts
- The Flat Cable between the LPH H PWB (K) J566 and the LPH (K) J574 for open circuits, short circuits, and poor contacts (connection within the LPH Unit)
- The connector (P/J578) between the LPH Rear PWB (K) and the LPH H PWB (K) for damage and foreign substances
- The LPH Unit (K) for improper installation

If no problems are found, replace the following parts in sequence:

- LPH Unit (K) (PL 2.1)
- LPH Cable Assembly (PL 2.2)
- LPH Rear PWB (K) (PL 2.2)
- MCU PWB (7525/30/35) (PL 18.2A)
- MCU PWB (7545/56) (PL 18.2B)

361-386 LPH PLL Lock Fault Y

BSD-ON:BSD 6.8 LPH Control (Y)

LPH PLL lock mechanism failure (LPH clock failure).

NOTE: *When turning the power OFF, turn OFF the Power Switch first and then the Main Power Switch.*

Procedure

Enter DC122 Fail History. Check whether 361-354 LPH Download Fail Y has occurred.

Has Fail 361-354 occurred?

Y N

Replace the following parts in sequence:

- LPH Unit (Y) (PL 2.1)
- LPH Cable Assembly (PL 2.2)
- LPH Rear PWB (Y) (PL 2.2)
- MCU PWB (7525/30/35) (PL 18.2A)
- MCU PWB (7545/56) (PL 18.2B)

Proceed to the 361-354 RAP.

361-387 LPH PLL Lock Fault M

BSD-ON:BSD 6.9 LPH Control (M)

LPH PLL lock mechanism failure (LPH clock failure).

NOTE: *When turning the power OFF, turn OFF the Power Switch first and then the Main Power Switch.*

Procedure

Enter DC122 Fail History. Check whether 361-355 LPH Download Fail M has occurred.

Has Fail 361-355 occurred?

Y N

Replace the following parts in sequence:

- LPH Unit (M) (PL 2.1)
- LPH Cable Assembly (PL 2.2)
- LPH Rear PWB (M) (PL 2.2)
- MCU PWB (7525/30/35) (PL 18.2A)
- MCU PWB (7545/56) (PL 18.2B)

Proceed to the 361-355 RAP.

361-388 LPH PLL Lock Fault C

BSD-ON:BSD 6.10 LPH Control (C)

LPH PLL lock mechanism failure (LPH clock failure).

NOTE: *When turning the power OFF, turn OFF the Power Switch first and then the Main Power Switch.*

Procedure

Enter DC122 Fail History. Check whether 361-356 LPH Download Fail C has occurred.

Has Fail 361-356 occurred?

Y N

Replace the following parts in sequence:

- LPH Unit (C) (PL 2.1)
- LPH Cable Assembly (PL 2.2)
- LPH Rear PWB (C) (PL 2.2)
- MCU PWB (7525/30/35) (PL 18.2A)
- MCU PWB (7545/56) (PL 18.2B)

Proceed to the 361-356 RAP.

361-389 LPH PLL Lock Fault K

BSD-ON:BSD 6.11 LPH Control (K)

LPH PLL lock mechanism failure (LPH clock failure).

NOTE: *When turning the power OFF, turn OFF the Power Switch first and then the Main Power Switch.*

Procedure

Enter DC122 Fail History. Check whether 361-357 LPH Download Fail K has occurred.

Has Fail 361-357 occurred?

Y N

Replace the following parts in sequence:

- LPH Unit (K) (PL 2.1)
- LPH Cable Assembly (PL 2.2)
- LPH Rear PWB (K) (PL 2.2)
- MCU PWB (7525/30/35) (PL 18.2A)
- MCU PWB (7545/56) (PL 18.2B)

Proceed to the 361-357 RAP.

361-390 LPH FFC Connect Posi Fault Y

BSD-ON:BSD 6.8 LPH Control (Y)

The image data (Y) cannot be received normally from the MCU.

NOTE: *When turning the power OFF, turn OFF the Power Switch first and then the Main Power Switch.*

Procedure

Enter DC122 Fail History. Check whether 361-374 LPH Chip Fail Y has occurred.

Has Fail 361-374 occurred?

Y N

Replace the following parts in sequence:

- LPH Unit (Y) (PL 2.1)
- LPH Cable Assembly (PL 2.2)
- LPH Rear PWB (Y) (PL 2.2)
- MCU PWB (7525/30/35) (PL 18.2A)
- MCU PWB (7545/56) (PL 18.2B)

Proceed to the 361-374 RAP.

361-391 LPH FFC Connect Posi Fault M

BSD-ON:BSD 6.9 LPH Control (M)

The image data (M) cannot be received normally from the MCU.

NOTE: *When turning the power OFF, turn OFF the Power Switch first and then the Main Power Switch.*

Procedure

Enter DC122 Fail History. Check whether 361-375 LPH Chip Fail M has occurred.

Has Fail 361-375 occurred?

Y N

Replace the following parts in sequence:

- LPH Unit (M) (PL 2.1)
- LPH Cable Assembly (PL 2.2)
- LPH Rear PWB (M) (PL 2.2)
- MCU PWB (7525/30/35) (PL 18.2A)
- MCU PWB (7545/56) (PL 18.2B)

Proceed to the 361-375 RAP.

361-392 LPH FFC Connect Posi Fault C

BSD-ON:BSD 6.10 LPH Control (C)

The image data (C) cannot be received normally from the MCU.

NOTE: *When turning the power OFF, turn OFF the Power Switch first and then the Main Power Switch.*

Procedure

Enter DC122 Fail History. Check whether 361-376 LPH Chip Fail C has occurred.

Has Fail 361-376 occurred?

Y N

Replace the following parts in sequence:

- LPH Unit (C) (PL 2.1)
- LPH Cable Assembly (PL 2.2)
- LPH Rear PWB (C) (PL 2.2)
- MCU PWB (7525/30/35) (PL 18.2A)
- MCU PWB (7545/56) (PL 18.2B)

Proceed to the 361-376 RAP.

361-393 LPH FFC Connect Posi Fault K

BSD-ON:BSD 6.11 LPH Control (K)

The image data (K) cannot be received normally from the MCU.

NOTE: *When turning the power OFF, turn OFF the Power Switch first and then the Main Power Switch.*

Procedure

Enter DC122 Fail History. Check whether 361-377 LPH Chip Fail K has occurred.

Has Fail 361-377 occurred?

Y N

Replace the following parts in sequence:

- LPH Unit (K) (PL 2.1)
- LPH Cable Assembly (PL 2.2)
- LPH Rear PWB (K) (PL 2.2)
- MCU PWB (7525/30/35) (PL 18.2A)
- MCU PWB (7545/56) (PL 18.2B)

Proceed to the 361-377 RAP.

361-394 LPH FFC Connect Nega Fault Y

BSD-ON:BSD 6.8 LPH Control (Y)

The image data (Y) cannot be received normally from the MCU.

NOTE: *When turning the power OFF, turn OFF the Power Switch first and then the Main Power Switch.*

Procedure

Enter DC122 Fail History. Check whether 361-374 LPH Chip Fail Y has occurred.

Has Fail 361-374 occurred?

Y N

Replace the following parts in sequence:

- LPH Unit (Y) (PL 2.1)
- LPH Cable Assembly (PL 2.2)
- LPH Rear PWB (Y) (PL 2.2)
- MCU PWB (7525/30/35) (PL 18.2A)
- MCU PWB (7545/56) (PL 18.2B)

Proceed to the 361-374 RAP.

361-395 LPH FFC Connect Nega Fault M

BSD-ON:BSD 6.9 LPH Control (M)

The image data (M) cannot be received normally from the MCU.

NOTE: *When turning the power OFF, turn OFF the Power Switch first and then the Main Power Switch.*

Initial Actions

Reseat the Drum Modules. Power off, then on if the fault does not clear.

Procedure

Enter DC122 Fail History. Check whether 361-375 LPH Chip Fail M has occurred.

Has Fail 361-375 occurred?

Y N

Replace the following parts in sequence:

- LPH Unit (M) (PL 2.1)
- LPH Cable Assembly (PL 2.2)
- LPH Rear PWB (M) (PL 2.2)
- MCU PWB (7525/30/35) (PL 18.2A)
- MCU PWB (7545/56) (PL 18.2B)

Proceed to the 361-375 RAP.

361-396 LPH FFC Connect Nega Fault C

BSD-ON:BSD 6.10 LPH Control (C)

The image data (C) cannot be received normally from the MCU.

NOTE: *When turning the power OFF, turn OFF the Power Switch first and then the Main Power Switch.*

Procedure

Enter DC122 Fail History. Check whether 361-376 LPH Chip Fail C has occurred.

Has Fail 361-376 occurred?

Y N

Replace the following parts in sequence:

- LPH Unit (C) (PL 2.1)
- LPH Cable Assembly (PL 2.2)
- LPH Rear PWB (C) (PL 2.2)
- MCU PWB (7525/30/35) (PL 18.2A)
- MCU PWB (7545/56) (PL 18.2B)

Proceed to the 361-376 RAP.

361-397 LPH FFC Connect Nega Fault K

BSD-ON:BSD 6.11 LPH Control (K)

The image data (K) cannot be received normally from the MCU.

NOTE: *When turning the power OFF, turn OFF the Power Switch first and then the Main Power Switch.*

Procedure

Enter DC122 Fail History. Check whether 361-377 LPH Chip Fail K has occurred.

Has Fail 361-377 occurred?

Y N

Replace the following parts in sequence:

- LPH Unit (K) (PL 2.1)
- LPH Cable Assembly (PL 2.2)
- LPH Rear PWB (K) (PL 2.2)
- MCU PWB (7525/30/35) (PL 18.2A)
- MCU PWB (7545/56) (PL 18.2B)

Proceed to the 361-377 RAP.

361-398 BITZ1 Initialize Fault

BSD-ON:-

The Bitz1 initialization error was detected. This is an error where the CPU is unable to access the memory and the register of the ASIC BITZ (image processing chip for Y and M) that is installed on the MCU PWB.

NOTE: *When turning the power OFF, turn OFF the Power Switch first and then the Main Power Switch.*

Procedure

Enter DC122 Fail History. Check whether an LPH-related Fail has occurred.

Has any Chain No. 361 Fail occurred?

Y **N**

Replace the following parts in sequence:

- LPH Cable Assembly (PL 2.2)
- MCU PWB (7525/30/35) (PL 18.2A)
- MCU PWB (7545/56) (PL 18.2B)

Go to the appropriate RAP

361-399 BITZ2 Initialize Fault

BSD-ON:-

The Bitz2 initialization error was detected. This is an error where the CPU is unable to access the memory and the register of the ASIC BITZ (image processing chip for C and K) that is installed on the MCU PWB.

NOTE: *When turning the power OFF, turn OFF the Power Switch first and then the Main Power Switch.*

Procedure

Enter DC122 Fail History. Check whether an LPH-related Fail has occurred.

Has any Chain No. 361 Fail occurred?

Y **N**

Replace the following parts in sequence:

- LPH Cable Assembly (PL 2.2)
- MCU PWB (7525/30/35) (PL 18.2A)
- MCU PWB (7545/56) (PL 18.2B)

Go to the appropriate RAP

361-610 Bitz1 CONTIF Fault

BSD-ON:-

An irregularity was detected in the Valid signal for Y or M color. The Valid signal, which is sent from the Controller to indicate the valid range of the fast scan, does not turn ON at the given timing or turns ON at an unscheduled timing. (This is a hidden failure. Data is only recorded in history.)

NOTE: *When turning the power OFF, turn OFF the Power Switch first and then the Main Power Switch.*

Cause/Action

1. Turn the power OFF and ON.
2. Check whether there is poor connection or foreign substances at the following connectors.
   - Between BP PWB and MCU PWB P451
   - Between BP PWB J335 and SBC PWB P335
   - Between BP PWB J309 and SBC PWB P309

   If no problems are found, replace the following parts in sequence:
   - BP PWB (7525/30/35) (PL 18.2A)
   - BP PWB (7545/56) (PL 18.2B)
   - MCU PWB (7525/30/35) (PL 18.2A)
   - MCU PWB (7545/56) (PL 18.2B)
   - SBC PWB (PL 35.2)

361-611 Bitz2 CONTIF Fault

BSD-ON:-

An irregularity was detected in the Valid signal for C or K color. The Valid signal, which is sent from the Controller to indicate the valid range of the fast scan, does not turn ON at the given timing or turns ON at an unscheduled timing. (This is a hidden failure. Data is only recorded in history.)

NOTE: *When turning the power OFF, turn OFF the Power Switch first and then the Main Power Switch.*

Cause/Action

1. Turn the power OFF and ON.
2. Check whether there is poor connection or foreign substances at the following connectors.
   - Between BP PWB and MCU PWB P451
   - Between BP PWB J335 and SBC PWB P335
   - Between BP PWB J309 and SBC PWB P309

   If no problems are found, replace the following parts in sequence:
   - BP PWB (7525/30/35) (PL 18.2A)
   - BP PWB (7545/56) (PL 18.2B)
   - MCU PWB (7525/30/35) (PL 18.2A)
   - MCU PWB (7545/56) (PL 18.2B)
   - SBC PWB (PL 35.2)

362-277 IPS-DADF Communication Fault

BSD-ON:BSD 3.5 PWB Communication (5 of 7)

Communication cannot be established between the SBC PWB and the DADF PWB.

NOTE: *When turning the power OFF, turn OFF the Power Switch first and then the Main Power Switch.*

Cause/Action

1. Turn the power OFF and ON.
2. Turn the power OFF and check the following:
   - The connector (P/J309) between the SBC PWB and the BP PWB for damage and foreign substances
   - The connection between the BP PWB P/J 390 and the IIT PWB P/J7192 for open circuit, short circuit, and poor contact
   - The connectors of the BP PWB P313 and the IIT PWB P/J7192 for damage, foreign substances, bent connector pins, burns, and improper soldering on the PWB
   - The connection between the IIT PWB P750 and the DADF PWB J751 and J752 for open circuit, short circuit, and poor contact
   - The connectors of the IIT PWB P750 and the DADF PWB J751 and J752 for damage, foreign substances, bent connector pins, burns, and improper soldering on the PWB

   If no problems are found, replace the following parts in sequence:
   - DADF PWB (PL 51.2)
   - SBC PWB (PL 35.2)
   - IIT PWB (Switch the EEPROM) (PL 1.8)
   - BP PWB (7525/30/35) (PL 18.2A)
   - BP PWB (7545/56) (PL 18.2B)

362-300 Platen Interlock Open

BSD-ON:BSD 3.7 PWB Communication (7 of 7)

The Platen Interlock is open.

NOTE: *When turning the power OFF, turn OFF the Power Switch first and then the Main Power Switch.*

Procedure

Remove the IIT Top Cover.
Cheat the Platen Interlock Switch P775-1 and P775-2 and turn the power ON.
Does the 062-300 display disappear?

Y N

Is the voltage between the Platen Interlock Switch P775-2 (+) and the GND (-) +5VDC?

Y N

Turn the power OFF and check the following:
- The connection between the Platen Interlock Switch P775-2 and the IIT PWB J722-13 for open circuit and poor contact
- The connection between the IIT PWB P/J7192-30 and the BP PWB P313-11 for open circuit, short circuit, and poor contact
- The connectors of the IIT PWB P/J7192 and the BP PWB P313 for damage, foreign substances, bent connector pins, burns, and improper soldering on the PWB
- The connector (P/J309) between the SBC PWB and the BP PWB for damage and foreign substances

If no problems are found, replace the SBC PWB (PL 35.2).

Is the voltage between the Platen Interlock Switch P775-1 (+) and the GND (-) +5VDC?

Y N

Replace the Platen Interlock Switch (PL 51.5).

Check the DC COM circuit between the Platen Interlock Switch P775-1 and the IIT PWB J722-14.

Check the installation status of the Magnet and the closing status of the DADF. If the problem persists, replace the Platen Interlock Switch (PL 51.5).

362-310 IIT-SBC Communication Fault

BSD-ON:BSD 3.3 PWB Communication (3 of 7)

Communication cannot be established between the IIT PWB and the SBC PWB.

NOTE: *When turning the power OFF, turn OFF the Power Switch first and then the Main Power Switch.*

Procedure

Turn the power OFF and ON.
Enter dC122 and check the Fault History for additional faults. **Fault codes 362-481 and 362-476 are BOTH also present.**

Y N

Fault code 362-481 is also present.

Y N

Turn the power OFF and check the following:

- The connector P/J309 between the SBC PWB and the BP PWB for damage and foreign substances
- The connection between the BP PWB and the IIT PWB P/J7192 for open circuit, short circuit, and poor contact
- The connectors of the BP PWB and the IIT PWB P/J7192 for damage, foreign substances, bent connector pins, burns, and improper soldering on the PWB

If no problems are found, replace the following parts in sequence:

- IIT PWB (Switch the EEPROM) (PL 1.8)
- SBC PWB (PL 35.2)
- BP PWB (7525/30/35) (PL 18.2A)
- BP PWB (7545/56) (PL 18.2B)

Go to the 362-277 IPS-DADF Communication Fault RAP to troubleshoot.

Go to the following RAPs:

- 362-395 (7525/30/35) IIT PWB Power Cable Connection Fault RAP
- 362-395 (7545/56) IIT PWB Power Cable Connection Fault RAP
- 362-398 IIT-Cont I/O Cable Connection Fault RAP

362-311 IIT Software Logic Fault

BSD-ON:BSD 3.3 PWB Communication (3 of 7)

A software error was detected at the SBC PWB.

NOTE: *When turning the power OFF, turn OFF the Power Switch first and then the Main Power Switch.*

Procedure

1. Turn the power OFF and ON.
2. If the problem persists, turn the power OFF and replace the SBC PWB (PL 35.2).

362-342 CCD PWB Configuration Fault

BSD-ON:BSD 6.6 Image Input

A CCD PWB other than the specified one is installed.

NOTE: *When turning the power OFF, turn OFF the Power Switch first and then the Main Power Switch.*

Cause/Action

1. Verify the following NVM location, depending on machine speed:
   801-025 = 3 (7525/7530/7535)
   801-025 = 4 (7545/7556)
2. Turn the power OFF and ON.
3. Turn the power OFF and replace with the correct CCD Lens Assembly (PL 1.5).

362-345 IIT EEPROM Fault (IIT)

BSD-ON:BSD 3.3 PWB Communication (3 of 7)

Write failure to EEPROM or communication failure with EEPROM has occurred.

NOTE: *When turning the power OFF, turn OFF the Power Switch first and then the Main Power Switch.*

Cause/Action

Turn the power OFF and ON.

If the problem persists, turn the power OFF and replace the IIT PWB (PL 1.8) (Write the values from the IIT Shipment Inspection NVM List.)

362-360 Carriage Position Fault

BSD-ON:Chain 6 BSDs

The Carriage position error was detected.

NOTE: *When turning the power OFF, turn OFF the Power Switch first and then the Main Power Switch.*

Procedure

Remove the Platen Glass and move the Full Rate Carriage to right and left manually.
Does the Carriage moves smoothly, with no interference?

Y N

Check the Carriage operation for mechanical load, the Carriage Cable for winding failure, the Rail for contamination/foreign substances, and the Full Rate/Half Rate Carriage for improper position (ADJ 6.1), etc.

Turn the power ON and enter the Diag mode. Turn ON DC330 [062-005] (Scan) or [062-006] (Return). **Does the Carriage move?**

Y N

Is the voltage between the Carriage Motor P776-1/2 (+) and the GND (-) +24VDC?

Y N

Go to +24VDC Power RAP (7525/30/35) or +24VDC Power RAP (7545/56) .

Turn the power OFF and check the following:

- The connection between the Carriage Motor P776 and the IIT PWB J722 for open circuit, short circuit, and poor contact
- The coaxial cable between the IIT PWB J7191 and the BP PWB P313 for open circuit, short circuit, and poor contact
- The connection between the IIT PWB P/J7192 and the BP PWB for open circuit, short circuit, and poor contact
- The connector (P/J309) between the SBC PWB and the BP PWB for damage and foreign substances

If no problems are found, replace the following parts in sequence:

- IIT PWB (Switch the EEPROM) (PL 1.8)
- Carriage Motor (PL 1.6)
- SBC PWB (PL 35.2)
- BP PWB (7525/30/35) (PL 18.2A)
- BP PWB (7545/56) (PL 18.2B)

Press the Stop button. Turn ON DC330 [062-212] (IIT Reg Sensor). Manually move the Carriage and turn the IIT Reg Sensor ON then OFF. **Does the display change between High/Low?**

Y N

Use " Permeable Sensor Failure RAP" to check the IIT Reg Sensor.

It can be considered that there were no errors. Again, check the Carriage operation, check for any noise source around the machine and check for any abnormal electrical discharge, etc.
If the problem occurs frequently, replace the following parts in sequence:

- SBC PWB (PL 35.2)
- IIT PWB (Switch the EEPROM) (PL 1.7)

362-362 X Hard Fault

BSD-ON:BSD 3.3 PWB Communication (3 of 7)

Hard modification of authentication device was detected (at usual detection/power ON).

NOTE: *When turning the power OFF, turn OFF the Power Switch first and then the Main Power Switch.*

Cause/Action

Turn the power OFF and ON.

If the problem persists, turn the power OFF and replace the SBC PWB (PL 35.2).

362-371 Lamp Illumination Fault

BSD-ON:BSD 6.6 Image Input

Insufficient light from Lamp detected in CCD (during white gradation correction/AGC before Scan starts)

NOTE: *When turning the power OFF, turn OFF the Power Switch first and then the Main Power Switch.*

Initial Actions

Check whether there is something blocking the light and check the Lamp, Lens, Mirror, and White Color Correction Plate for deterioration or contamination.

Procedure

1. Turn the power ON and perform the following voltage checks on the IIT PWB:
   a. Check for ANA 10V between TP 30 and GND.
   b. Check for ANA 3.3V between TP 20 and GND.
   c. Check for +3.3VDC between TP 10 and DC COM.

   If one or more voltages is incorrect, replace the IIT/PS PWB (PL 1.8); otherwise, continue with Step 2.
2. Check the following:
   - LED Lamp broken: dC330 [062-002] (PL 1.7)

     Switch the power off.
   - Check the Flat Cable between the LED Lamp PWB J1 and the IIT PWB J723 for open circuits, short circuits, and poor contacts (especially, check whether the Flat Cable was inserted in a skewed manner).
   - Check the Flat Cable between the CCD Lens Assy J700 and the IIT PWB J710 for open circuits, short circuits, and poor contacts (especially, check whether the Flat Cable was inserted in a skewed manner).
   - The coaxial cable between the IIT PWB J7191 and the BP PWB P313 for open circuit, short circuit, and poor contact
   - The connector (P/J309) between the SBC PWB and the BP PWB for damage and foreign substances

362-380 Platen AGC Fault

BSD-ON:BSD 6.6 Image Input

Insufficient lamp brightness was detected when performing AGC.

NOTE: *When turning the power OFF, turn OFF the Power Switch first and then the Main Power Switch.*

Initial Actions

Check whether there is something blocking the light and check the Lamp, Lens, Mirror, and White Color Correction Plate for deterioration or contamination.

Procedure

1. Switch the power off, then on.
2. If the problem persists, check the following:
   - LED Lamp broken: dC330 [062-002] (PL 1.7)

     Switch the power off.
   - Check the Flat Cable between the LED Lamp PWB J1 and the IIT PWB J723 for open circuits, short circuits, and poor contacts (especially, check whether the Flat Cable was inserted in a skewed manner).
   - Check the Flat Cable between the CCD Lens Assy J700 and the IIT PWB J710 for open circuits, short circuits, and poor contacts (especially, check whether the Flat Cable was inserted in a skewed manner).
   - The coaxial cable between the IIT PWB J7191 and the BP PWB P313 for open circuit, short circuit, and poor contact
   - The connector (P/J309) between the SBC PWB and the BP PWB for damage and foreign substances

362-386 Platen AOC Fault

BSD-ON:BSD 6.6 Image Input

A CCD output error was detected when performing AOC.

NOTE: *When turning the power OFF, turn OFF the Power Switch first and then the Main Power Switch.*

Initial Actions

Check whether there is something blocking the light and check the Lamp, Lens, Mirror, and White Color Correction Plate for deterioration or contamination.

Procedure

1. Switch the power off, then on.
2. If the problem persists, switch power off and check the following:
   - Check the Flat Cable between the CCD Lens Assy J700 and the IIT PWB J710 for open circuits, short circuits, and poor contacts (especially, check whether the Flat Cable was inserted in a skewed manner).
   - The coaxial cable between the IIT PWB J7191 and the BP PWB for an open circuit, short circuit, and poor contact
   - The connector (P/J309) between the SBC PWB and the BP PWB for damage and foreign substances

   If no problems are found, replace the following parts in sequence:
   - CCD Lens Assy (PL 1.5)
   - SBC PWB (PL 35.2)
   - IIT PWB (Switch the EEPROM) (PL 1.8)
   - BP PWB (7525/30/35) (PL 18.2A)
   - BP PWB (7545/56) (PL 18.2B)

362-389 Carriage Over Run Fault

BSD-ON:Chain 6 BSDs

The Carriage has overrun at the Scan End.

NOTE: *When turning the power OFF, turn OFF the Power Switch first and then the Main Power Switch.*

Procedure

Remove the Platen Glass and move the Full Rate Carriage to right and left manually.
Does the Carriage moves smoothly, with no interference?

Y N

Check the Carriage operation for mechanical load, the Carriage Cable for winding failure, the Rail for contamination/foreign substances, and the Full Rate/Half Rate Carriage for improper position (ADJ 6.1), etc.

Turn the power ON and enter the Diag mode. Turn ON dC330 [062-005] (Scan) or [062-006] (Return). **Does the Carriage move?**

Y N

Is the voltage between the Carriage Motor P776-1/2 (+) and the GND (-) +24VDC?

Y N

Go to +24VDC Power RAP (7525/30/35) or +24VDC Power RAP (7545/56) .

Turn the power OFF and check the following:

- The connection between the Carriage Motor P776 and the IIT PWB J722 for open circuit, short circuit, and poor contact
- The coaxial cable between the IIT PWB J7191 and the BP PWB for an open circuit, short circuit, and poor contact
- The connection between the IIT PWB P/J7192 and the BP PWB P313 for open circuit, short circuit, and poor contact
- The connector (P/J309) between the SBC PWB and the BP PWB for damage and foreign substances

If no problems are found, replace the following parts in sequence:

- IIT PWB (Switch the EEPROM) (PL 1.8)
- Carriage Motor (PL 1.6)
- SBC PWB (PL 35.2)
- BP PWB (7525/30/35) (PL 18.2A)
- BP PWB (7545/56) (PL 18.2B)

Press the Stop button. Turn ON DC330 [062-212] (IIT Reg Sensor). Manually move the Carriage and turn the IIT Reg Sensor ON then OFF. **Does the display change between High/Low?**

Y N

Use " Permeable Sensor Failure RAP" to check the IIT Reg Sensor.

It can be considered that there were no errors. Again, check the Carriage operation, check for any noise source around the machine and check for any abnormal electrical discharge, etc.
If the problem occurs frequently, replace the following parts in sequence:

- SBC (PL 35.2)
- IIT PWB (Switch the EEPROM) (PL 1.8)

362-392 IIT Memory Fault

BSD-ON:BSD 3.3 PWB Communication (3 of 7)

SBC PWB RAM failure was detected (checked at power ON). Or, internal processing error has occurred in the SBC PWB.

NOTE: *When turning the power OFF, turn OFF the Power Switch first and then the Main Power Switch.*

Procedure

1. Switch the power off, then on.
2. If the problem persists, switch power off and check the following:
   - Check the Flat Cable between the CCD Lens Assy J700 and the IIT PWB J710 for open circuits, short circuits, and poor contacts (especially, check whether the Flat Cable was inserted in a skewed manner).
   - The coaxial cable between the IIT PWB J7191 and the BP PWB P313 for open circuit, short circuit, and poor contact
   - The connector (P/J309) between the SBC PWB and the BP PWB for damage and foreign substances

   If no problems are found, replace the following parts in sequence:
   - SBC PWB (PL 35.2)
   - IIT PWB (Switch the EEPROM) (PL 1.8)
   - BP PWB (7525/30/35) (PL 18.2A)
   - BP PWB (7545/56) (PL 18.2B)

362-393 CCD PWB Sync Signal Fault

BSD-ON:BSD 6.6 Image Input

- Write failure to the Shading Memory has occurred.
- Averaging processing error has occurred in the ASIC.

NOTE: *When turning the power OFF, turn OFF the Power Switch first and then the Main Power Switch.*

Procedure

1. Switch the power off, then on.
2. If the problem persists, switch power off and check the following:
   - Check the Flat Cable between the CCD Lens Assy J700 and the IIT PWB J710 for open circuits, short circuits, and poor contacts (especially, check whether the Flat Cable was inserted in a skewed manner).
   - The coaxial cable between the IIT PWB J7191 and the BP PWB for an open circuit, short circuit, and poor contact
   - The connector (P/J309) between the SBC PWB and the BP PWB for damage and foreign substances

   If no problems are found, replace the following parts in sequence:
   - SBC PWB (PL 35.2)
   - IIT PWB (Switch the EEPROM) (PL 1.8)
   - BP PWB (7525/30/35) (PL 18.2A)
   - BP PWB (7545/56) (PL 18.2B)

362-395 (7525/30/35) IIT PWB Power Cable Connection Fault

BSD-ON:BSD 3.3 PWB Communication (3 of 7)

The IIT PWB power source error was detected.

NOTE: *When turning the power OFF, turn OFF the Power Switch first and then the Main Power Switch.*

Procedure

Turn the power OFF and remove the Right Cover.
Turn the power ON. **Is the voltage between the Main LVPS J502-2 (+) and J502-4 (-) +24VDC?**

Y **N**

Go to +24VDC Power RAP (7525/30/35) .

Turn the power OFF and check the connection between the Main LVPS PWB J502 and the IIT PWB J720 for open circuit, short circuit, and poor contact.
If no problems are found, replace the IIT PWB (Switch the EEPROM) (PL 1.8).

362-395 (7545/56) IIT PWB Power Cable Connection Fault

BSD-ON:BSD 3.3 PWB Communication (3 of 7)

The IIT PWB power source error was detected.

NOTE: *When turning the power OFF, turn OFF the Power Switch first and then the Main Power Switch.*

Procedure

Turn the power OFF and remove the Rear Upper Cover. Disconnect the connector J592 of the MD PWB and open the Chassis Assembly.
Turn the power ON. **Is the voltage between the Sub LVPS J505-1 (+) and J505-3 (-) +24VDC?**

Y **N**

Go to +24VDC Power RAP (7545/56) .

Turn the power OFF and check the connection between the Sub LVPS PWB J505 and the IIT PWB J720 for open circuit, short circuit, and poor contact.
If no problems are found, replace the IIT PWB (Switch the EEPROM) (PL 1.8).

362-396 CCD Cable Connection Fault

BSD-ON:BSD 3.3 PWB Communication (3 of 7)

A CCD Flat Cable connection error was detected.

NOTE: *When turning the power OFF, turn OFF the Power Switch first and then the Main Power Switch.*

Cause/Action

1. Turn the power OFF and ON.
2. Turn the power OFF and check the following:
   - Check the Flat Cable between the CCD Lens Assy J700 and the IIT PWB J710 for open circuits, short circuits, and poor contacts (especially, check whether the Flat Cable was inserted in a skewed manner).
   - The coaxial cable between the IIT PWB J7191 and the BP PWB for an open circuit, short circuit, and poor contact
   - The connector (P/J309) between the SBC PWB and the BP PWB for damage and foreign substances

   If no problems are found, replace the following parts in sequence:
   - IIT PWB (Switch the EEPROM) (PL 1.8)
   - SBC PWB (PL 35.2)
   - BP PWB (7525/30/35) (PL 18.2A)
   - BP PWB (7545/56) (PL 18.2B)

362-397 IIT-Cont Video Cable Connection Fault

BSD-ON:BSD 3.3 PWB Communication (3 of 7)

An SBC Video Cable connection error was detected.

NOTE: *When turning the power OFF, turn OFF the Power Switch first and then the Main Power Switch.*

Cause/Action

1. Turn the power OFF and ON.
2. Turn the power OFF and check the following:
   - The coaxial cable between the IIT PWB J7191 and the BP PWB for open circuit, short circuit, and poor contact
   - The connector (P/J309) between the SBC PWB and the BP PWB for damage and foreign substances

   If no problems are found, replace the following parts in sequence:
   - SBC PWB (PL 35.2)
   - IIT PWB (Switch the EEPROM) (PL 1.8)
   - BP PWB (7525/30/35) (PL 18.2A)
   - BP PWB (7545/56) (PL 18.2B)

362-398 IIT-Cont I/O Cable Connection Fault

BSD-ON:BSD 3.3 PWB Communication (3 of 7)

An SBC I/O Cable connection error was detected.

NOTE: *When turning the power OFF, turn OFF the Power Switch first and then the Main Power Switch.*

Cause/Action

1. Turn the power OFF and ON.
2. Turn the power OFF and check the following:
   - The connection between the IIT PWB P/J7192 and the BP PWB P313 for open circuit, short circuit, and poor contact
   - The connector (P/J309) between the SBC PWB and the BP PWB for damage and foreign substances

   If no problems are found, replace the following parts in sequence:
   - IIT PWB (Switch the EEPROM) (PL 1.8)
   - BP PWB (7525/30/35) (PL 18.2A)
   - BP PWB (7545/56) (PL 18.2B)
   - SBC PWB (PL 35.2)

362-450 Calibration Dark Range Not Clear

Dark range status bit is not clear prior to calibration

Procedure

Switch the power off, then on.

362-451 Calibration Dark Range Not Done

Dark range status bit is not set after calibration

Procedure

1. Switch the power off, then on.
2. Go to the following RAPs:
   - 362-395 (7525/30/35) IIT PWB Power Cable Connection Fault
   - 362-395 (7545/56) IIT PWB Power Cable Connection Fault
   - 362-398 IIT-Cont I/O Cable Connection Fault

362-452 Calibration Pixel Offset Not Clear

Pixel offset status bit is not clear prior to calibration

Procedure

Switch the power off, then on.

362-454 Calibration Gain Range Not Clear

Gain range status bit is not clear prior to calibration

Procedure

Switch the power off, then on.

362-455 Calibration Gain Range Not Done

Gain range status bit is not set after calibration

Procedure

Switch the power off, then on.

362-457 Calibration Pixel Gain Not Done

Pixel gain status bit is not set after calibration

Procedure

Switch the power off, then on.

362-458 Calibration Dark Range Errors

Highest Intensity image pixel value exceeds maximum tolerance

Procedure

Switch the power off, then on.

362-459 Calibration Pixel Offset Hi Errors

Pixel error exceeds maximum adjustment allowed during dark calibration

Procedure

Switch the power off, then on.

362-460 Calibration Dark Range Errors

Pixel error exceeds maximum adjustment allowed during dark calibration

Procedure

Switch the power off, then on.

362-461 Calibration Gain Range Errors

Highest Intensity image pixel value is lower than the minimum tolerance

Procedure

1. Switch the power off, then on.
2. Go to the 362-396 CCD Cable Connection Fault RAP to troubleshoot.

362-462 Calibration Pixel Gain Hi Errors

Pixel error exceeds maximum adjustment allowed during white calibration

Procedure

Switch the power off, then on.

362-463 Calibration Pixel Gain Lo Errors

Pixel error exceeds maximum adjustment allowed during white calibration

Procedure

Switch the power off, then on.

362-464 Scan Controller Busy Error

The scanner was asked to perform another operation while busy.

Procedure

Switch the power off, then on.

362-466 Dark Range Rail Error

Pixels out of range during black calibration

Procedure

1. Switch the power off, then on.
2. Go to the following RAPs:
   - 362-395 (7525/30/35) IIT PWB Power Cable Connection Fault
   - 362-395 (7545/56) IIT PWB Power Cable Connection Fault
   - 362-398 IIT-Cont I/O Cable Connection Fault

362-467 Gain Range Rail Error

Pixels out of range during white calibration

Procedure

Switch the power off, then on.

362-468 Color State Errors

Pixel clock error from the full width array

Procedure

Switch the power off, then on.

362-469 Fpga Comms Error

Calibration ASIC comms error with m/c.

Copying from the platen when NVM is corrupted.

Procedure

1. Switch the power off, then on. If problem still exists, continue with step 2.
2. Enter Diagnostics dC301.
3. Select [Copier] (left), [Scanner] (center), [All] (right).
4. Select [Initialize] and exit Diagnostics.
5. Switch the power off, then on.
6. **See Eureka tip 1078835 if software level is 061.120.200.35301 or higher, for reporting.** Make sure to complete and send the form attached to the tip.

362-471 Fpga Write Wrap Error

Calibration ASIC write buffer is full

Procedure

Switch the power off, then on.

362-472 Fpga Bus Time Out

Calibration ASIC comms timeout

Procedure

Switch the power off, then on.

362-473 UART RX Wrap Error

M/C receive buffer is full

Procedure

Switch the power off, then on.

362-474 Stepper Speed Error

Speed request exceeds look up table range

Procedure

Switch the power off, then on.

362-475 Move Before Reset Error

Initialization not received after 24 volt power cycle

Procedure

Switch the power off, then on.

362-476 Stepper Home Error

BSD-ON: BSD 6.1 Document Illumination

IIT Reg. Sensor not cleared/made in time

NOTE: *When turning the power OFF, turn OFF the Power Switch first and then the Main Power Switch.*

Procedure

Switch the power off, then on.
Enter dC122 and check the Fault History for additional faults. **Fault codes 362-310 and 362-481 are BOTH also present.**

Y **N**

Fault Code 362-481 is also present.

Y **N**

Go to the following RAPs:

- 362-371 Lamp Illumination Fault
- 362-386 Platen AOC Fault

Go to the 362-277 IPS-DADF Communication Fault RAP to troubleshoot.

Go to the following RAPs:

- 362-395 (7525/30/35) IIT PWB Power Cable Connection Fault RAP
- 362-395 (7545/56) IIT PWB Power Cable Connection Fault RAP
- 362-398 IIT-Cont I/O Cable Connection Fault RAP

362-477 Stepper Busy Error

BSD-ON: **BSD 6.1 Document Illumination**

New command received while the carriage is moving

Procedure

Switch the power off, then on.

362-478 Real Time Error

M/C unable to complete tasks within the required time

Procedure

Switch the power off, then on.

362-480 Initialize Timeout

Initialization commands are not received from SBC

Procedure

Switch the power off, then on.

362-481 DADF Communication Timeout

BSD-ON:BSD 3.5 PWB Communication (5 of 7)

Communication cannot be established between the SBC PWB and the DADF PWB.

NOTE: *When turning the power OFF, turn OFF the Power Switch first and then the Main Power Switch.*

Procedure

Turn the power OFF and ON.
Enter dC122 and check the Fault History for additional faults. **Fault Code 362-310 is also present.**

Y N

Turn the power OFF and check the following:

- The connector (P/J309) between the SBC PWB and the BP PWB for damage and foreign substances
- The connection between the BP PWB P/J 390 and the IIT PWB P/J7192 for open circuit, short circuit, and poor contact
- The connection between the IIT PWB P750 and the DADF PWB J751 and J752 for open circuit, short circuit, and poor contact
- The connectors of the IIT PWB P750 and the DADF PWB J751 and J752 for damage, foreign substances, bent connector pins, burns, and improper soldering on the PWB

If no problems are found, replace the following parts in sequence:

- DADF PWB (PL 51.2)
- IIT PWB (Switch the EEPROM) (PL 1.8)
- BP PWB (7525/30/35) (PL 18.2A)
- BP PWB (7545/56) (PL 18.2B)
- SBC PWB (PL 35.2)

Go to the 362-277 IPS-DADF Communication Fault RAP to troubleshoot.

362-487 System PLL Error

Calibration ASIC clock error

Procedure

Switch the power off, then on.

362-790 X-Recognition Fault

BSD-ON:-

The document being scanned is a legal tender, securities, etc., and therefore is prohibited by law.

Procedure

Refer to "Legal Notices" in the User Guide to check the document types available for copying.

371-210 Tray 1 Lift Up Fault

BSD-ON:BSD 7.6 Tray 1 Paper Stacking

Tray 1 Lift Up NG has occurred 3 times in a row.

NOTE: *When turning the power OFF, turn OFF the Power Switch first and then the Main Power Switch.*

Procedure

Remove Tray 1. Turn the power ON and enter the Diag mode. Turn ON dC330 [071-001] (Tray 1 Feed/Lift Up Motor). **Does the Tray 1 Feed/Lift Up Motor rotate?**

Y N

Is the voltage between the MD PWB J520-9 (+) and the GND (-) +24VDC?

Y N

Go to +24VDC Power RAP (7525/30/35) +24VDC Power RAP or +24VDC Power RAP (7545/56) +24VDC Power RAP.

Turn the power OFF, then measure the Tray 1 Feed/Lift Up Motor wire wound resistance. Remove the Rear Upper Cover, then measure the following resistances.

- Between the MD PWB J528-B1 and the J528-B2
- Between the MD PWB J528-B3 and the J528-B4

Is the resistance approx. 4.0 Ohm for each? (At 25 degrees C / 77 degrees F)

Y N

Check the connection between the MD PWB J528 and the Tray 1 Feed/Lift Up Motor J268 for open circuit, short circuit, and poor contact. If there are no problems, replace the Tray 1 Feed/Lift Up Motor (PL 9.4).

Measure the resistance between the MD PWB J528-B1/B2/B3/B4 and the Frame.

Is the resistance infinite for all?

Y N

Check the wires of the pins with non-infinite resistance for peeled-off coatings and short circuits due to pinching.

Replace the following parts in sequence:

- MD PWB (7525/30/35) (PL 18.2A)
- MD PWB (7545/56) (PL 18.2B)
- MCU PWB (7525/30/35) (PL 18.2A)
- MCU PWB (7545/56) (PL 18.2B)

Press the Stop button. Turn ON dC330 [071-102] (Tray 1 Nudger Level Sensor). Use a sheet of paper, etc. to block/clear the light path to the Tray 1 Nudger Level Sensor. **Does the display change between High/Low?**

Y N

Go to BSD 7.6 Tray 1 Paper Stacking to check for damaged wiring or a contaminated sensor. If the wiring is OK, replace the Tray 1 Nudger Level Sensor (PL 9.4) before replacing the MD PWB:

- MD PWB (7525/30/35) (PL 18.2A)
- MD PWB (7545/56) (PL 18.2B)

Press the Stop button and turn the power OFF.

Check the Tray Lift Up Gear for damage or the Tray Lift Up mechanism for mechanical load. If no problems are found, replace the following parts in sequence:

- MD PWB (7525/30/35) (PL 18.2A)
- MD PWB (7545/56) (PL 18.2B)
- MCU PWB (7525/30/35) (PL 18.2A)
- MCU PWB (7545/56) (PL 18.2B)

371-212 Tray 1 Paper Size Sensor Broken

BSD-ON:Chain 7 BSDs

Abnormal Analog voltage to Digital value from Tray 1 Size Sensor was detected.

NOTE: *When turning the power OFF, turn OFF the Power Switch first and then the Main Power Switch.*

Cause/Action

Check the following:

- Broken link and breakage at the bottom of the tray
- The Actuator at the rear of the Tray for operation failure
- The Tray 1 Paper Size Sensor for failure: dC140 [071-200], dC330 [071-104] (PL 9.1)
- The connection between the Tray 1 Paper Size Sensor J174 and the MCU PWB J417 for open circuit, short circuit, and poor contact

If no problems are found, replace the MCU PWB.

- MCU PWB (7525/30/35) (PL 18.2A)
- MCU PWB (7545/56) (PL 18.2B)

371-940 Tray 1 Lift Up NG

BSD-ON:BSD 7.6 Tray 1 Paper Stacking

After the Tray 1 Lift Up has started, the Tray 1 Nudger Level Sensor did not turn ON within the specified time.

Cause/Action

1. Pull out and reinsert Tray 1 and check for improper loading of paper.
2. Enter dC122 Fail History. If this failure occurs frequently, go to the 371-210 RAP.

372-101 Tray 2 Misfeed

BSD-ON:BSD 8.2 Tray Module Paper Transportation (1 of 2)

BSD-ON:BSD 7.7 Tray 2 Paper Stacking

The Tray 2 Feed Out Sensor does not turn ON within the specified time after the Feed from Tray 2 has started.

NOTE: *When turning the power OFF, turn OFF the Power Switch first and then the Main Power Switch.*

Initial Actions

Remove the Rear Upper Cover and the Rear Cover. Check the connection between the MD PWB J592 and the Tray Module PWB J541 for open circuit, short circuit, and poor contact.

Procedure

Turn the power ON and enter the Diag mode. Turn ON DC330 [072-001] (Tray 2 Feed/Lift Up Motor). **Does the Tray 2 Feed/Lift Up Motor rotate?**

Y N

Is the voltage between the Tray Module PWB J541-10 (+) and the GND (-) +24VDC?

Y N

Go to +24VDC Power RAP (7525/30/35) +24VDC Power RAP or +24VDC Power RAP (7545/56) +24VDC Power RAP.

Turn the power OFF, then measure the Tray 2 Feed/Lift Up Motor wire wound resistance. Check the resistance of the following.

- Between the Tray Module PWB J550-1 and J550-2
- Between the Tray Module PWB J550-3 and J550-4

Is the resistance approx. 4.0 Ohm for each? (At 25 degrees C / 77 degrees F)

Y N

Check the connection between the Tray Module PWB J550 and the Tray 2 Feed/Lift Up Motor J221 for open circuit, short circuit, and poor contact. If there are no problems, replace the Tray 2 Feed/Lift Up Motor (PL 10.3).

Measure the resistance between the Tray Module PWB J550-1/2/3/4 and the Frame.

Is the resistance infinite for all?

Y N

Check the wires of the pins with non-infinite resistance for peeled-off coatings and short circuits due to pinching.

Replace the following parts in sequence:

- Tray Module PWB (PL 10.9)
- MD PWB (7525/30/35) (PL 18.2A)
- MD PWB (7545/56) (PL 18.2B)
- MCU PWB (7525/30/35) (PL 18.2A)
- MCU PWB (7545/56) (PL 18.2B)

Press the Stop button.

Turn ON DC330 [077-035] (TM Takeaway Motor). **Does the TM Takeaway Motor rotate?**

Y N

Is the voltage between the TM Takeaway Motor J224-2/5 (+) and the GND (-) +24VDC?

Y N

Go to +24VDC Power RAP (7525/30/35) +24VDC Power RAP or +24VDC Power RAP (7545/56) +24VDC Power RAP.

Turn the power OFF, disconnect the TM Takeaway Motor connector J224.

Measure the TM Takeaway Motor wire wound resistance.

- Between the TM Takeaway Motor J224-2 and J224-1
- Between the TM Takeaway Motor J224-2 and J224-3
- Between the TM Takeaway Motor J224-5 and J224-4
- Between the TM Takeaway Motor J224-5 and J224-6

Is the resistance approx. 0.85 Ohm for each? (At 25 degrees C / 77 degrees F

Y N

Replace the TM Takeaway Motor.

- TM Takeaway Motor (PL 10.9)

Measure the resistance between the disconnected TM Takeaway Motor connectors J224-1/3/4/6 and the Frame. **Is the resistance infinite for all?**

Y N

Check the wires of the pins with non-infinite resistance for peeled-off coatings and short circuits due to pinching.

Check the connection between the Tray Module PWB J551 and the TM Takeaway Motor J224 for open circuit, short circuit, and poor contact. If no problems are found, replace the following parts in sequence:

- Tray Module PWB (PL 10.9)
- MD PWB (7525/30/35) (PL 18.2A)
- MD PWB (7545/56) (PL 18.2B)
- MCU PWB (7525/30/35) (PL 18.2A)
- MCU PWB (7545/56) (PL 18.2B)

Press the Stop button and open the L/H Cover. Turn ON DC330 [072-103] (Tray 2 Feed Out Sensor).

Move the Actuator manually to block/clear the light path to the Tray 2 Feed Out Sensor.

Does the display change between High/Low?

Y N

Use OF 99-2 Transmissive Sensor RAP to check the Tray 2 Feed Out Sensor.

Press the Stop button and turn the power OFF. Check the following:

- A paper transportation failure due to a foreign substance/burr on the paper path
- The Feed Roll, Retard Roll, and Nudger Roll for contamination, wear, and revolution failure
- The TM Takeaway Roll and Pinch Roll for contamination, wear, and revolution failure
- The Feed Roll, Retard Roll, and Nudger Roll Drive Gears for wear and damage
- The TM Takeaway Roll Drive Gear for wear and damage
- Use of paper out of spec (Refer to the spec in Chapter 6 General)

If no problems are found, replace the following parts in sequence:

- Tray Module PWB (PL 10.9)
- MD PWB (7525/30/35) (PL 18.2A)
- MD PWB (7545/56) (PL 18.2B)
- MCU PWB (7525/30/35) (PL 18.2A)
- MCU PWB (7545/56) (PL 18.2B)

372-102 Feed Out Sensor On Jam (Tray 2)

BSD-ON:BSD 8.2 Tray Module Paper Transportation (1 of 2)

BSD-ON:BSD 8.4 Tray Module Paper Transportation (3 of 4) (3TM)

Feed Out Sensor 1 does not turn ON within the specified time during transport of the paper fed from Tray 2 to Take Away Path.

NOTE: *When turning the power OFF, turn OFF the Power Switch first and then the Main Power Switch.*

Cause/Action

Check the following:

- Lower Exit Pinch Rollers (PL 17.2) may be missing.
- A paper transportation failure due to a foreign substance/burr on the paper path
- The TM Takeaway Roll and Pinch Roll for contamination, wear, and revolution failure
- The TM Takeaway Roll Drive Gear for wear and damage
- Use of paper out of spec (Refer to the spec in Chapter 6 General)
- The Tray 2 Feed Out Sensor for contamination, improper installation, and Actuator operation failure
- The Tray 2 Feed Out Sensor for failure: DC330 [072-103] (PL 10.12)
- The connection between the Tray 2 Feed Out Sensor J108 and the Tray Module PWB J549 for open circuit, short circuit, and poor contact
- The TM Takeaway Motor for revolution failure: DC330 [077-035] (PL 10.9)
- The connection between the MD PWB J592 and the Tray Module PWB J541 for open circuit, short circuit, and poor contact

If no problems are found, replace the following parts in sequence:

- Tray Module PWB (PL 10.9)
- MD PWB (7525/30/35) (PL 18.2A)
- MD PWB (7545/56) (PL 18.2B)
- MCU PWB (7525/30/35) (PL 18.2A)
- MCU PWB (7545/56) (PL 18.2B)

372-108 Feed Out Sensor 2 On Jam (Tray 3/4)

BSD-ON:BSD 8.2 Tray Module Paper Transportation (1 of 2)

BSD-ON:BSD 8.4 Tray Module Paper Transportation (3 of 4) (3TM)

The Tray 2 Feed Out Sensor does not turn ON within the specified time after the Feed from Tray 3 or Tray 4 has started.

NOTE: *When turning the power OFF, turn OFF the Power Switch first and then the Main Power Switch.*

Cause/Action

Check the following:

- A paper transportation failure due to a foreign substance/burr on the paper path
- The TM Takeaway Roll and Pinch Roll for contamination, wear, and revolution failure
- The TM Takeaway Roll Drive Gear for wear and damage
- Use of paper out of spec (Refer to the spec in Chapter 6 General)
- The Tray 2 Feed Out Sensor for contamination, improper installation, and Actuator operation failure
- The Tray 2 Feed Out Sensor for failure: DC330 [072-103] (PL 10.12)
- The connection between the Tray 2 Feed Out Sensor J108 and the Tray Module PWB J549 for open circuit, short circuit, and poor contact
- The TM Takeaway Motor for revolution failure: DC330 [077-035] (PL 10.9)
- The connection between the MD PWB J592 and the Tray Module PWB J541 for open circuit, short circuit, and poor contact

If no problems are found, replace the following parts in sequence:

- Tray Module PWB (PL 10.9)
- MD PWB (7525/30/35) (PL 18.2A)
- MD PWB (7545/56) (PL 18.2B)
- MCU PWB (7525/30/35) (PL 18.2A)
- MCU PWB (7545/56) (PL 18.2B)

372-109 Reg Sensor On Jam (Tray1/2/3/4)

BSD-ON:BSD 8.2 Tray Module Paper Transportation (1 of 2)

BSD-ON:BSD 7.6 Tray 1 Paper Stacking

BSD-ON:BSD 8.3 Tray Module Paper Transportation (2 of 2)

The Reg Sensor does not turn ON within the specified time after the Reg Clutch On after the Feed from the Tray has started.

NOTE: *When turning the power OFF, turn OFF the Power Switch first and then the Main Power Switch.*

Cause/Action

Check the following:

- A paper transportation failure due to a foreign substance/burr on the paper path
- The Tray 1 Feed Roll, Retard Roll, and Nudger Roll for contamination, wear, and revolution failure (when the jam has occurred during Feed from Tray 1)
- Each Takeaway Roll and Pinch Roll for contamination, wear, and revolution failure
- Each Takeaway Roll Drive Gear for wear and damage
- Use of paper out of spec (Refer to the spec in Chapter 6 General)
- The Reg Sensor for contamination, improper installation, and Actuator operation failure
- The Reg Sensor for failure: DC330 [077-103] (PL 15.2)
- The connection between the Reg Sensor J160 and the MD PWB J523 for open circuit, short circuit, and poor contact
- The Main Drive Motor for revolution failure: DC330 [042-002] (PL 3.2)
- The Tray 1 Feed/Lift Up Motor for revolution failure: DC330 [071-001] (PL 9.4) (when the jam has occurred during Feed from Tray 1)
- The Takeaway Clutch for failure (7525/30/35): DC330 [077-001] (PL 15.1) (when the jam has occurred during Feed from Tray 1)
- The TM Takeaway Motor for revolution failure (7525/30/35): DC330 [077-031] (PL 10.9)
- The Takeaway Motor for revolution failure (7545/56): DC330 [077-050] (PL 15.1)
- The TM Takeaway Motor for revolution failure (7545/56): DC330 [077-035] (PL 10.9)
- The TM Takeaway Motor 2 for revolution failure (7545/56): DC330 [077-037] (PL 10.9)
- The Reg Transport Assy (7525/30/35) (PL 15.1) for installation failure

  If no problems are found, replace the following parts in sequence:

- MD PWB (7525/30/35) (PL 18.2A)
- MD PWB (7545/56) (PL 18.2B)
- MCU PWB (7525/30/35) (PL 18.2A)
- MCU PWB (7545/56) (PL 18.2B)

372-210 Tray 2 Lift Up Fault

BSD-ON:BSD 7.7 Tray 2 Paper Stacking

Tray 2 Lift Up NG has occurred 3 times in a row.

NOTE: *When turning the power OFF, turn OFF the Power Switch first and then the Main Power Switch.*

Procedure

Remove Tray 2. Turn the power ON and enter the Diag mode. Turn ON DC330 [072-001] (Tray 2 Feed/Lift Up Motor). **Does the Tray 2 Feed/Lift Up Motor rotate?**

Y N

Is the voltage between the Tray Module PWB J541-10 (+) and the GND (-) +24VDC?

Y N

Go to +24VDC Power RAP (7525/30/35) +24VDC Power RAP or +24VDC Power RAP (7545/56) +24VDC Power RAP.

Turn the power OFF, then measure the Tray 2 Feed/Lift Up Motor wire wound resistance. Remove the Rear Upper Cover, then measure the following resistances.

- Between the Tray Module PWB J550-1 and J550-2
- Between the Tray Module PWB J550-3 and J550-4

Is the resistance approx. 4.0 Ohm for each? (At 25 degrees C / 77 degrees F

Y N

Check the connection between the Tray Module PWB J550 and the Tray 2 Feed/Lift Up Motor J221 for open circuit, short circuit, and poor contact. If there are no problems, replace the Tray 2 Feed/Lift Up Motor (PL 10.3).

Measure the resistance between the Tray Module PWB J550-1/2/3/4 and the Frame.

Is the resistance infinite for all?

Y N

Check the wires of the pins with non-infinite resistance for peeled-off coatings and short circuits due to pinching.

Replace the following parts in sequence:

- Tray Module PWB (PL 10.9)
- MD PWB (7525/30/35) (PL 18.2A)
- MD PWB (7545/56) (PL 18.2B)
- MCU PWB (7525/30/35) (PL 18.2A)
- MCU PWB (7545/56) (PL 18.2B)

Press the Stop button. Turn ON DC330 [072-102] (Tray 2 Nudger Level Sensor). Use a sheet of paper, etc. to block/clear the light path to the Tray 2 Nudger Level Sensor. **Does the display change between High/Low?**

Y N

Use OF 99-2 Transmissive Sensor RAP to check the Tray 2 Nudger Level Sensor.

Press the Stop button and turn the power OFF.

Check the Tray Lift Up Gear for damage or the Tray Lift Up mechanism for mechanical load. If no problems are found, replace the following parts in sequence:

- Tray Module PWB (PL 10.9)
- MD PWB (7525/30/35) (PL 18.2A)
- MD PWB (7545/56) (PL 18.2B)
- MCU PWB (7525/30/35) (PL 18.2A)
- MCU PWB (7545/56) (PL 18.2B)

372-212 Tray 2 Paper Size Sensor Broken

BSD-ON:BSD 7.2 Tray 2 Paper Size Sensing

Abnormal Analog voltage to Digital value from Tray 2 Size Sensor was detected.

NOTE: *When turning the power OFF, turn OFF the Power Switch first and then the Main Power Switch.*

Cause/Action

Check the following:

- Broken link and breakage at the bottom of the tray
- The Actuator at the rear of the Tray for operation failure
- The Tray 2 Paper Size Sensor for failure: DC140[072-200],DC330 [072-104] (PL 10.1)
- Check the connection between the Tray 2 Paper Size Sensor J101 and the Tray Module PWB J549 for open circuit, short circuit, and poor contact

If no problems are found, replace the following parts in sequence:

- Tray Module PWB (PL 10.9)
- MD PWB (7525/30/35) (PL 18.2A)
- MD PWB (7545/56) (PL 18.2B)
- MCU PWB (7525/30/35) (PL 18.2A)
- MCU PWB (7545/56) (PL 18.2B)

372-900 Tray 2 Feed Out Sensor Static Jam

BSD-ON:BSD 8.2 Tray Module Paper Transportation (1 of 2)

When the power was turned ON, the M/C was stopped (Cycle Down/ Shut Down), or when the interlocks were closed (all interlocks including options), the Tray 2 Feed Out Sensor detected paper.

NOTE: *When turning the power OFF, turn OFF the Power Switch first and then the Main Power Switch.*

Cause/Action

Check the following:

- The Tray 2 Feed Out Sensor for remaining paper, contamination, Actuator return failure, or improper installation
- The Tray 2 Feed Out Sensor for failure: DC330 [072-103] (PL 10.12)
- The connection between the Tray 2 Feed Out Sensor J108-1 and the Tray Module PWB J549-A3 for short circuit
- The connection between the MD PWB J592-A6 and the Tray Module PWB J541-6 for short circuit

If no problems are found, replace the following parts in sequence:

- Tray Module PWB (PL 10.9)
- MD PWB (7525/30/35) (PL 18.2A)
- MD PWB (7545/56) (PL 18.2B)
- MCU PWB (7525/30/35) (PL 18.2A)
- MCU PWB (7545/56) (PL 18.2B)

372-940 Tray 2 Lift Up NG

BSD-ON:BSD 7.7 Tray 2 Paper Stacking

After the Tray 2 Lift Up has started, the Tray 2 Nudger Level Sensor did not turn ON within the specified time.

Cause/Action

1. Pull out and reinsert Tray 2 and check for improper loading of paper.
2. Enter DC122 Fail History. If this failure occurs frequently, go to the RAP 372-210 .

373-101 (7525/30/35) Tray 3 Misfeed

BSD-ON:BSD 8.2 Tray Module Paper Transportation (1 of 2)

BSD-ON:BSD 7.8 Tray 3 Paper Stacking

BSD-ON:BSD 8.4 Tray Module Paper Transportation (3 of 4) (3TM)

The Tray 3 Feed Out Sensor does not turn ON within the specified time after the Feed from Tray 3 has started.

NOTE: *When turning the power OFF, turn OFF the Power Switch first and then the Main Power Switch.*

Initial Actions

Remove the Rear Upper Cover and the Rear Cover. Check the connection between the MD PWB J592 and the Tray Module PWB J541 for open circuit, short circuit, and poor contact.

Procedure

Turn the power ON and enter the Diag mode. Turn ON DC330 [073-001] (Tray 3 Feed/Lift Up Motor). **Does the Tray 3 Feed/Lift Up Motor rotate?**

Y N

Is the voltage between the Tray Module PWB J541-10 (+) and the GND (-) +24VDC?

Y N

Go to +24VDC Power RAP (7525/30/35) +24VDC Power RAP.

Turn the power OFF, then measure the Tray 3 Feed/Lift Up Motor wire wound resistance. Check the resistance of the following.

- Between the Tray Module PWB J550-5 and J550-6
- Between the Tray Module PWB J550-7 and J550-8

Is the resistance approx. 4.0 Ohm for each? (At 25 degree C / 77 degree F)

Y N

Check the connection between the Tray Module PWB J550 and the Tray 3 Feed/Lift Up Motor J222 for open circuit, short circuit, and poor contact. If there are no problems, replace the Tray 3 Feed/Lift Up Motor (PL 10.5).

Measure the resistance between the Tray Module PWB J550-5/6/7/8 and the Frame.

Is the resistance infinite for all?

Y N

Check the wires of the pins with non-infinite resistance for peeled-off coatings and short circuits due to pinching.

Replace the following parts in sequence:

- Tray Module PWB (PL 10.9)
- MD PWB (PL 18.2A)
- MCU PWB (PL 18.2A)

Press the Stop button. Turn ON DC330 [077-031] (TM Takeaway Motor).

Does the TM Takeaway Motor rotate?

Y N

Is the voltage between the TM Takeaway Motor J224-2/5 (+) and the GND (-) +24VDC?

Y N

Go to +24VDC Power RAP (7525/30/35) +24VDC Power RAP.

Turn the power OFF, disconnect the TM Takeaway Motor connector J224.

Measure the TM Takeaway Motor wire wound resistance.

- Between the TM Takeaway Motor J224-2 and J224-1
- Between the TM Takeaway Motor J224-2 and J224-3
- Between the TM Takeaway Motor J224-5 and J224-4
- Between the TM Takeaway Motor J224-5 and J224-6

Is the resistance approx. 0.85 Ohm for each? (At 25 degree C / 77 degree F)

Y N

Replace the TM Takeaway Motor (PL 10.9).

Measure the resistance between the disconnected TM Takeaway Motor connectors J224-1/3/4/6 and the Frame. **Is the resistance infinite for all?**

Y N

Check the wires of the pins with non-infinite resistance for peeled-off coatings and short circuits due to pinching.

Check the connection between the Tray Module PWB J551 and the TM Takeaway Motor J224 for open circuit, short circuit, and poor contact. If no problems are found, replace the following parts in sequence:

- Tray Module PWB (PL 10.9)
- MD PWB (PL 18.2A)
- MCU PWB (PL 18.2A)

Press the Stop button and open the L/H Cover. Turn ON DC330 [073-103] (Tray 3 Feed Out Sensor). Move the Actuator manually to block/clear the light path to the Tray 3 Feed Out Sensor.

Does the display change between High/Low?

Y N

Use OF 99-2 Transmissive Sensor RAP to check the Tray 3 Feed Out Sensor.

Press the Stop button and turn the power OFF. Check the following:

- A paper transportation failure due to a foreign substance/burr on the paper path
- The TM Takeaway Roll and Pinch Roll for contamination, wear, and revolution failure
- The Feed Roll, Retard Roll, and Nudger Roll for contamination, wear, and revolution failure
- The Feed Roll, Retard Roll, and Nudger Roll Drive Gears for wear and damage
- The TM Takeaway Roll Drive Gear for wear and damage
- Use of paper out of spec (Refer to the spec in Chapter 6 General)

If no problems are found, replace the following parts in sequence:

- Tray Module PWB (PL 10.9)
- MD PWB (PL 18.2A)
- MCU PWB (PL 18.2A)

373-101 (7545/56) Tray 3 Misfeed

BSD-ON:BSD 8.2 Tray Module Paper Transportation (1 of 2)

BSD-ON:BSD 7.8 Tray 3 Paper Stacking

BSD-ON:BSD 8.4 Tray Module Paper Transportation (3 of 4) (3TM)

The Tray 3 Feed Out Sensor does not turn ON within the specified time after the Feed from Tray 3 has started.

NOTE: *When turning the power OFF, turn OFF the Power Switch first and then the Main Power Switch.*

Initial Actions

Remove the Rear Upper Cover and the Rear Cover. Check the connection between the MD PWB J592 and the Tray Module PWB J541 for open circuit, short circuit, and poor contact.

Procedure

Turn the power ON and enter the Diag mode. Turn ON DC330 [073-001] (Tray 3 Feed/Lift Up Motor). **Does the Tray 3 Feed/Lift Up Motor rotate?**

Y N

Is the voltage between the Tray Module PWB J541-10 (+) and the GND (-) +24VDC?

Y N

Go to +24VDC Power RAP (7545/56) +24VDC Power RAP.

Turn the power OFF, then measure the Tray 3 Feed/Lift Up Motor wire wound resistance. Check the resistance of the following.

- Between the Tray Module PWB J550-5 and J550-6
- Between the Tray Module PWB J550-7 and J550-8

Is the resistance approx. 4.0 Ohm for each? (At 25 degree C / 77 degree F)

Y N

Check the connection between the Tray Module PWB J550 and the Tray 3 Feed/Lift Up Motor J222 for open circuit, short circuit, and poor contact. If there are no problems, replace the Tray 3 Feed/Lift Up Motor (PL 10.5).

Measure the resistance between the Tray Module PWB J550-5/6/7/8 and the Frame.

Is the resistance infinite for all?

Y N

Check the wires of the pins with non-infinite resistance for peeled-off coatings and short circuits due to pinching.

Replace the following parts in sequence:

- Tray Module PWB (PL 10.9)
- MD PWB (PL 18.2B)
- MCU PWB (PL 18.2B)

Press the Stop button. Turn On DC330 [077-037] (TM Takeaway Motor 2).

Does the TM Takeaway Motor 2 rotate?

Y N

Is the voltage between the TM Takeaway Motor 2 J226-2/5 (+) and the GND (-) +24VDC?

Y N

Go to +24VDC Power RAP (7545/56) +24VDC Power RAP.

Turn the power OFF, disconnect the TM Takeaway Motor 2 connector J226.

Measure the TM Takeaway Motor 2 wire wound resistance.

- Between the TM Takeaway Motor 2 J226-2 and J226-1
- Between the TM Takeaway Motor 2 J226-2 and J226-3
- Between the TM Takeaway Motor 2 J226-5 and J226-4
- Between the TM Takeaway Motor 2 J226-5 and J226-6

Is the resistance approx. 0.85 Ohm for each? (At 25 degree C / 77 degree F)

Y N

Replace the TM Takeaway Motor 2 (PL 10.9).

Measure the resistance between the disconnected TM Takeaway Motor 2 connectors J226-1/3/4/6 and the Frame. **Is the resistance infinite for all?**

Y N

Check the wires of the pins with non-infinite resistance for peeled-off coatings and short circuits due to pinching.

Check the connection between the Tray Module PWB J552 and the TM Takeaway Motor 2 J226 for open circuit, short circuit, and poor contact. If no problems are found, replace the following parts in sequence:

- Tray Module PWB (PL 10.9)
- MD PWB (PL 18.2B)
- MCU PWB (PL 18.2B)

Press the Stop button and open the L/H Cover. Turn ON DC330 [073-103] (Tray 3 Feed Out Sensor). Move the Actuator manually to block/clear the light path to the Tray 3 Feed Out Sensor.

Does the display change between High/Low?

Y N

Use OF 99-2 Transmissive Sensor RAP to check the Tray 3 Feed Out Sensor.

Press the Stop button and turn the power OFF. Check the following:

- A paper transportation failure due to a foreign substance/burr on the paper path
- The Feed Roll, Retard Roll, and Nudger Roll for contamination, wear, and revolution failure
- The TM Takeaway Roll and Pinch Roll for contamination, wear, and revolution failure
- The Feed Roll, Retard Roll, and Nudger Roll Drive Gears for wear and damage
- The TM Takeaway Roll Drive Gear for wear and damage
- Use of paper out of spec (Refer to the spec in Chapter 6 General)

If no problems are found, replace the following parts in sequence:

- Tray Module PWB (PL 10.9)
- MD PWB (PL 18.2B)
- MCU PWB (PL 18.2B)

373-102 Feed Out Sensor 3 On Jam (Tray 3)

BSD-ON:BSD 8.2 Tray Module Paper Transportation (2 of 4)

BSD-ON:BSD 8.4 Tray Module Paper Transportation (3 of 4) (3TM)

The Tray 3 Feed Out Sensor does not turn ON within the specified time after the Feed from Tray 3 has started.

NOTE: *When turning the power OFF, turn OFF the Power Switch first and then the Main Power Switch.*

Cause/Action

Check the following:

- Lower Exit Pinch Rollers (PL 17.2) may be missing.
- A paper transportation failure due to a foreign substance/burr on the paper path
- The TM Takeaway Roll and Pinch Roll for contamination, wear, and revolution failure
- The TM Takeaway Roll Drive Gear for wear and damage
- Use of paper out of spec (Refer to the spec in Chapter 6 General)
- The Tray 3 Feed Out Sensor for contamination, improper installation, and Actuator operation failure
- The Tray 3 Feed Out Sensor for failure: DC330 [073-103] (PL 10.12)
- The connection between the Tray 3 Feed Out Sensor J112 and the Tray Module PWB J548 for open circuit, short circuit, and poor contact
- The TM Takeaway Motor for revolution failure (7525/30/35): DC330 [077-031] (PL 10.9)
- The TM Takeaway Motor 2 for revolution failure (7545/56): DC330 [077-037] (PL 10.9)
- The connection between the MD PWB J592 and the Tray Module PWB J541 for open circuit, short circuit, and poor contact

If no problems are found, replace the following parts in sequence:

- Tray Module PWB (7525/30/35) (PL 10.9)
- Tray Module PWB (7545/56) (PL 10.9)
- MD PWB (7525/30/35) (PL 18.2A)
- MD PWB (7545/56) (PL 18.2B)
- MCU PWB (7525/30/35) (PL 18.2A)
- MCU PWB (7545/56) (PL 18.2B)

373-210 Tray 3 Lift Up Fault

BSD-ON:BSD 7.8 Tray 3 Paper Stacking

Tray 3 Lift Up NG has occurred 3 times in a row.

NOTE: *When turning the power OFF, turn OFF the Power Switch first and then the Main Power Switch.*

Procedure

Remove Tray 3. Turn the power ON and enter the Diag mode. Turn ON DC330 [073-001] (Tray 3 Feed/Lift Up Motor). **Does the Tray 3 Feed/Lift Up Motor rotate?**

Y N

Is the voltage between the Tray Module PWB J541-10 (+) and the GND (-) +24VDC?

Y N

Go to +24VDC Power RAP (7525/30/35) +24VDC Power RAP or +24VDC Power RAP (7545/56) +24VDC Power RAP.

Turn the power OFF, then measure the Tray 3 Feed/Lift Up Motor wire wound resistance. Remove the Rear Upper Cover, then measure the following resistances.

- Between the Tray Module PWB J550-5 and J550-6
- Between the Tray Module PWB J550-7 and J550-8

Is the resistance approx. 4.0 Ohm for each? (At 25 degree C / 77 degree F)

Y N

Check the connection between the Tray Module PWB J550 and the Tray 3 Feed/Lift Up Motor J222 for open circuit, short circuit, and poor contact. If there are no problems, replace the Tray 3 Feed/Lift Up Motor (PL 10.5).

Measure the resistance between the Tray Module PWB J550-5/6/7/8 and the Frame.

Is the resistance infinite for all?

Y N

Check the wires of the pins with non-infinite resistance for peeled-off coatings and short circuits due to pinching.

Replace the following parts in sequence:

- Tray Module PWB (7525/30/35) (PL 10.9)
- Tray Module PWB (7545/56) (PL 10.9)
- MD PWB (7525/30/35) (PL 18.2A)
- MD PWB (7545/56) (PL 18.2B)
- MCU PWB (7525/30/35) (PL 18.2A)
- MCU PWB (7545/56) (PL 18.2B)

Press the Stop button. Turn ON DC330 [073-102] (Tray 3 Nudger Level Sensor). Use a sheet of paper, etc. to block/clear the light path to the Tray 3 Nudger Level Sensor.

Does the display change between High/Low?

Y N

Use OF 99-2 Transmissive Sensor RAP to check the Tray 3 Nudger Level Sensor.

Press the Stop button and turn the power OFF.

Check the Tray Lift Up Gear for damage or the Tray Lift Up mechanism for mechanical load. If no problems are found, replace the following parts in sequence:

- Tray Module PWB (7525/30/35) (PL 10.9)
- Tray Module PWB (7545/56) (PL 10.9)
- MD PWB (7525/30/35) (PL 18.2A)
- MD PWB (7545/56) (PL 18.2B)
- MCU PWB (7525/30/35) (PL 18.2A)
- MCU PWB (7545/56) (PL 18.2B)

373-212 Tray 3 Paper Size Sensor Broken

BSD-ON:BSD 7.3 Tray 3 Paper Size Sensing

Abnormal Analog voltage to Digital value from Tray 3 Size Sensor was detected.

NOTE: *When turning the power OFF, turn OFF the Power Switch first and then the Main Power Switch.*

Cause/Action

Check the following:

- Broken link and breakage at the bottom of the tray
- The Actuator at the rear of the Tray for operation failure
- The Tray 3 Paper Size Sensor for failure: DC330 [073-104] (PL 10.1)
- The connection between the Tray 3 Paper Size Sensor J102 and the Tray Module PWB J549 for open circuit, short circuit, and poor contact

If no problems are found, replace the following parts in sequence:

- Tray Module PWB (7525/30/35) (PL 10.9)
- Tray Module PWB (7545/56) (PL 10.9)
- MD PWB (7525/30/35) (PL 18.2A)
- MD PWB (7545/56) (PL 18.2B)
- MCU PWB (7525/30/35) (PL 18.2A)
- MCU PWB (7545/56) (PL 18.2B)

373-900 Tray 3 Feed Out Sensor Static Jam

BSD-ON:BSD 8.2 Tray Module Paper Transportation (1 of 2)

When the power was turned ON, the M/C was stopped (Cycle Down/ Shut Down), or when the interlocks were closed (all interlocks including options), the Tray 3 Feed Out Sensor detected paper.

NOTE: *When turning the power OFF, turn OFF the Power Switch first and then the Main Power Switch.*

Cause/Action

Check the following:

- The Tray 3 Feed Out Sensor for remaining paper, contamination, Actuator return failure, or improper installation
- The Tray 3 Feed Out Sensor for failure: DC330 [073-103] (PL 10.12)
- The connection between the Tray 3 Feed Out Sensor J112-2 and the Tray Module PWB J548-11 for short circuit
- The connection between the MD PWB J592-A7 and the Tray Module PWB J541-7 for short circuit

If no problems are found, replace the following parts in sequence:

- Tray Module PWB (7525/30/35) (PL 10.9)
- Tray Module PWB (7545/56) (PL 10.9)
- MD PWB (7525/30/35) (PL 18.2A)
- MD PWB (7545/56) (PL 18.2B)
- MCU PWB (7525/30/35) (PL 18.2A)
- MCU PWB (7545/56) (PL 18.2B)

373-940 Tray 3 Lift Up NG

BSD-ON:BSD 7.8 Tray 3 Paper Stacking

After the Tray 3 Lift Up has started, the Tray 3 Nudger Level Sensor did not turn ON within the specified time.

Cause/Action

1. Pull out and reinsert Tray 3 and check for improper loading of paper.
2. Enter DC122 Fail History. If this failure occurs frequently, go to the RAP 373-210.

374-101 (7525/30/35) Tray 4 Misfeed

BSD-ON:BSD 8.2 Tray Module Paper Transportation (1 of 2)

BSD-ON:BSD 7.9 Tray 4 Paper Stacking

BSD-ON:BSD 8.4 Tray Module Paper Transportation (3 of 4) (3TM)

The Tray 4 Feed Out Sensor does not turn ON within the specified time after the Feed from Tray 4 has started.

NOTE: *When turning the power OFF, turn OFF the Power Switch first and then the Main Power Switch.*

Initial Actions

Remove the Rear Upper Cover and the Rear Cover. Check the connection between the MD PWB J592 and the Tray Module PWB J541 for open circuit, short circuit, and poor contact.

Procedure

Turn the power ON and enter the Diag mode. Turn ON DC330 [074-001] (Tray 4 Feed/Lift Up Motor). **Does the Tray 4 Feed/Lift Up Motor rotate?**

Y N

Is the voltage between the Tray Module PWB J541-10 (+) and the GND (-) +24VDC?

Y N

Go to +24VDC Power RAP (7525/30/35) +24VDC Power RAP.

Turn the power OFF, then measure the Tray 4 Feed/Lift Up Motor wire wound resistance. Check the resistance of the following.

- Between the Tray Module PWB J550-9 and J550-10
- Between the Tray Module PWB J550-11 and J550-12

Is the resistance approx. 4.0 Ohm for each? (At 25 degrees C / 77 degrees F)

Y N

Check the connection between the Tray Module PWB J550 and the Tray 4 Feed/Lift Up Motor J223 for open circuit, short circuit, and poor contact. If there are no problems, replace the Tray 4 Feed/Lift Up Motor (PL 10.7).

Measure the resistance between the Tray Module PWB J550-9/10/11/12 and the Frame. **Is the resistance infinite for all?**

Y N

Check the wires of the pins with non-infinite resistance for peeled-off coatings and short circuits due to pinching.

Replace the following parts in sequence:

- Tray Module PWB (PL 10.9)
- MD PWB (PL 18.2A)
- MCU PWB (PL 18.2A)

Press the Stop button. Turn ON DC330 [077-031] (TM Takeaway Motor). **Does the TM Takeaway Motor rotate?**

Y N

Is the voltage between the TM Takeaway Motor J224-2/5 (+) and the GND (-) +24VDC?

Y N

Go to +24VDC Power RAP (7525/30/35) +24VDC Power RAP.

Turn the power OFF, disconnect the TM Takeaway Motor connector J224. Measure the TM Takeaway Motor wire wound resistance.

- Between the TM Takeaway Motor J224-2 and J224-1
- Between the TM Takeaway Motor J224-2 and J224-3
- Between the TM Takeaway Motor J224-5 and J224-4
- Between the TM Takeaway Motor J224-5 and J224-6

Is the resistance approx. 0.85 Ohm for each? (At 25 degrees C / 77 degrees F)

Y N

Replace the TM Takeaway Motor (PL 10.9).

Measure the resistance between the disconnected TM Takeaway Motor connectors J224-1/3/4/6 and the Frame. **Is the resistance infinite for all?**

Y N

Check the wires of the pins with non-infinite resistance for peeled-off coatings and short circuits due to pinching.

Check the connection between the Tray Module PWB J551 and the TM Takeaway Motor J224 for open circuit, short circuit, and poor contact. If no problems are found, replace the following parts in sequence:

- Tray Module PWB (PL 10.9)
- MD PWB (PL 18.2A)
- MCU PWB (PL 18.2A)

Press the Stop button and open the L/H Cover. Turn ON DC330 [074-103] (Tray 4 Feed Out Sensor). Move the Actuator manually to block/clear the light path to the Tray 4 Feed Out Sensor.

Does the display change between High/Low?

Y N

Use OF 99-2 Transmissive Sensor RAP to check the Tray 4 Feed Out Sensor.

Press the Stop button and turn the power OFF. Check the following:

- A paper transportation failure due to a foreign substance/burr on the paper path
- The Feed Roll, Retard Roll, and Nudger Roll for contamination, wear, and revolution failure
- The TM Takeaway Roll and Pinch Roll for contamination, wear, and revolution failure
- The Feed Roll, Retard Roll, and Nudger Roll Drive Gears for wear and damage
- The TM Takeaway Roll Drive Gear for wear and damage
- Use of paper out of spec (Refer to the spec in Chapter 6 General)

If no problems are found, replace the following parts in sequence:

- Tray Module PWB (PL 10.9)
- MD PWB (PL 18.2A)
- MCU PWB (PL 18.2A)

374-101 (7545/56) Tray 4 Misfeed

BSD-ON:BSD 8.3 Tray Module Paper Transportation (2 of 4)

BSD-ON:BSD 7.9 Tray 4 Paper Stacking

BSD-ON:BSD 8.4 Tray Module Paper Transportation (3 of 4) (3TM)

The Tray 4 Feed Out Sensor does not turn ON within the specified time after the Feed from Tray 4 has started.

NOTE: *When turning the power OFF, turn OFF the Power Switch first and then the Main Power Switch.*

Initial Actions

Remove the Rear Upper Cover and the Rear Cover. Check the connection between the MD PWB J592 and the Tray Module PWB J541 for open circuit, short circuit, and poor contact.

Procedure

Turn the power ON and enter the Diag mode. Turn ON DC330 [074-001] (Tray 4 Feed/Lift Up Motor). **Does the Tray 4 Feed/Lift Up Motor rotate?**

Y N

Is the voltage between the Tray Module PWB J541-10 (+) and the GND (-) +24VDC?

Y N

Go to +24VDC Power RAP (7545/56) +24VDC Power RAP.

Turn the power OFF, then measure the Tray 4 Feed/Lift Up Motor wire wound resistance. Check the resistance of the following.

- Between the Tray Module PWB J550-9 and J550-10
- Between the Tray Module PWB J550-11 and J550-12

Is the resistance approx. 4.0 Ohm for each? (At 25 degrees C / 77 degrees F)

Y N

Check the connection between the Tray Module PWB J550 and the Tray 4 Feed/Lift Up Motor J223 for open circuit, short circuit, and poor contact. If there are no problems, replace the Tray 4 Feed/Lift Up Motor (PL 10.7).

Measure the resistance between the Tray Module PWB J550-9/10/11/12 and the Frame. **Is the resistance infinite for all?**

Y N

Check the wires of the pins with non-infinite resistance for peeled-off coatings and short circuits due to pinching.

Replace the following parts in sequence:

- Tray Module PWB (PL 10.9)
- MD PWB (PL 18.2B)
- MCU PWB (PL 18.2B)

Press the Stop button. Turn On DC330 [077-037] (TM Takeaway Motor 2). **Does the TM Takeaway Motor 2 rotate?**

Y N

Is the voltage between the TM Takeaway Motor 2 J226-2/5 (+) and the GND (-) +24VDC?

Y N

Go to +24VDC Power RAP (7545/56) +24VDC Power RAP.

Turn the power OFF, disconnect the TM Takeaway Motor 2 connector J226. Measure the TM Takeaway Motor 2 wire wound resistance.

- Between the TM Takeaway Motor 2 J226-2 and J226-1
- Between the TM Takeaway Motor 2 J226-2 and J226-3
- Between the TM Takeaway Motor 2 J226-5 and J226-4
- Between the TM Takeaway Motor 2 J226-5 and J226-6

Is the resistance approx. 0.85 Ohm for each? (At 25 degrees C / 77 degrees F)

Y N

Replace the TM Takeaway Motor 2 (PL 10.9).

Measure the resistance between the disconnected TM Takeaway Motor 2 connectors J226-1/3/4/6 and the Frame. **Is the resistance infinite for all?**

Y N

Check the wires of the pins with non-infinite resistance for peeled-off coatings and short circuits due to pinching.

Check the connection between the Tray Module PWB J552 and the TM Takeaway Motor 2 J226 for open circuit, short circuit, and poor contact. If no problems are found, replace the following parts in sequence:

- Tray Module PWB (PL 10.9)
- MD PWB (PL 18.2B)
- MCU PWB (PL 18.2B)

Press the Stop button and open the L/H Cover. Turn ON DC330 [074-103] (Tray 4 Feed Out Sensor). Move the Actuator manually to block/clear the light path to the Tray 4 Feed Out Sensor.

Does the display change between High/Low?

Y N

Use OF 99-2 Transmissive Sensor RAP to check the Tray 4 Feed Out Sensor.

Check the following:

- A paper transportation failure due to a foreign substance/burr on the paper path
- The Feed Roll, Retard Roll, and Nudger Roll for contamination, wear, and revolution failure
- The TM Takeaway Roll and Pinch Roll for contamination, wear, and revolution failure
- The Feed Roll, Retard Roll, and Nudger Roll Drive Gears for wear and damage
- The TM Takeaway Roll Drive Gear for wear and damage
- Use of paper out of spec (Refer to the spec in Chapter 6 General)

If no problems are found, replace the following parts in sequence:

- Tray Module PWB (PL 10.9)
- MD PWB (PL 18.2B)
- MCU PWB (PL 18.2B)

374-103 Feed Out Sensor 3 On Jam (Tray 4)

BSD-ON:BSD 8.2 Tray Module Paper Transportation (2 of 4)

BSD-ON:BSD 8.4 Tray Module Paper Transportation (3 of 4) (3TM)

The Tray 3 Feed Out Sensor does not turn ON within the specified time after the Feed from Tray 4 has started.

NOTE: *When turning the power OFF, turn OFF the Power Switch first and then the Main Power Switch.*

Cause/Action

Check the following:

- Lower Exit Pinch Rollers (PL 17.2) may be missing.
- A paper transportation failure due to a foreign substance/burr on the paper path
- The TM Takeaway Roll and Pinch Roll for contamination, wear, and revolution failure
- The TM Takeaway Roll Drive Gear for wear and damage
- Use of paper out of spec (Refer to the spec in Chapter 6 General)
- The Tray 3 Feed Out Sensor for contamination, improper installation, and Actuator operation failure
- The Tray 3 Feed Out Sensor for failure: DC330 [073-103] (PL 10.12)
- The connection between the Tray 3 Feed Out Sensor J112 and the Tray Module PWB J548 for open circuit, short circuit, and poor contact
- The TM Takeaway Motor for revolution failure (7525/30/35): DC330 [077-031] (PL 10.9)
- The TM Takeaway Motor 2 for revolution failure (7545/56): DC330 [077-037] (PL 10.9)
- The connection between the MD PWB J592 and the Tray Module PWB J541 for open circuit, short circuit, and poor contact

If no problems are found, replace the following parts in sequence:

- Tray Module PWB (7525/30/35) (PL 10.9)
- Tray Module PWB (7545/56) (PL 10.9)
- MD PWB (7525/30/35) (PL 18.2A)
- MD PWB (7545/56) (PL 18.2B)
- MCU PWB (7525/30/35) (PL 18.2A)
- MCU PWB (7545/56) (PL 18.2B)

374-210 Tray 4 Lift Up Fault

BSD-ON:BSD 7.9 Tray 4 Paper Stacking

Tray 4 Lift Up NG has occurred 3 times in a row.

NOTE: *When turning the power OFF, turn OFF the Power Switch first and then the Main Power Switch.*

Procedure

Remove Tray 4. Turn the power ON and enter the Diag mode. Turn ON DC330 [074-001] (Tray 4 Feed/Lift Up Motor). **Does the Tray 4 Feed/Lift Up Motor rotate?**

Y N

Is the voltage between the Tray Module PWB J541-10 (+) and the GND (-) +24VDC?

Y N

Go to +24VDC Power RAP (7525/30/35) +24VDC Power RAP or +24VDC Power RAP (7545/56) +24VDC Power RAP.

Turn the power OFF, then measure the Tray 4 Feed/Lift Up Motor wire wound resistance. Check the resistance of the following.

- Between the Tray Module PWB J550-9 and J550-10
- Between the Tray Module PWB J550-11 and J550-12

Is the resistance approx. 4.0 Ohm for each? (At 25 degrees C / 77 degrees F)

Y N

Check the connection between the Tray Module PWB J550 and the Tray 4 Feed/Lift Up Motor J223 for open circuit, short circuit, and poor contact. If there are no problems, replace the Tray 4 Feed/Lift Up Motor (PL 10.7).

Measure the resistance between the Tray Module PWB J550-9/10/11/12 and the Frame.

Is the resistance infinite for all?

Y N

Check the wires of the pins with non-infinite resistance for peeled-off coatings and short circuits due to pinching.

Replace the following parts in sequence:

- Tray Module PWB (7525/30/35) (PL 10.9)
- Tray Module PWB (7545/56) (PL 10.9)
- MD PWB (7525/30/35) (PL 18.2A)
- MD PWB (7545/56) (PL 18.2B)
- MCU PWB (7525/30/35) (PL 18.2A)
- MCU PWB (7545/56) (PL 18.2B)

Press the Stop button. Turn ON DC330 [074-102] (Tray 4 Nudger Level Sensor). Use a sheet of paper, etc. to block/clear the light path to the Tray 4 Nudger Level Sensor.

Does the display change between High/Low?

Y N

Use OF 99-2 Transmissive Sensor RAP to check the Tray 4 Nudger Level Sensor.

Press the Stop button and turn the power OFF.

Check the Tray Lift Up Gear for damage or the Tray Lift Up mechanism for mechanical load. If no problems are found, replace the following parts in sequence:

- Tray Module PWB (7525/30/35) (PL 10.9)
- Tray Module PWB (7545/56) (PL 10.9)
- MD PWB (7525/30/35) (PL 18.2A)
- MD PWB (7545/56) (PL 18.2B)
- MCU PWB (7525/30/35) (PL 18.2A)
- MCU PWB (7545/56) (PL 18.2B)

374-212 Tray 4 Paper Size Sensor Broken

BSD-ON:BSD 7.4 Tray 4 Paper Size Sensing

Abnormal output AD value from Tray 4 Size Sensor was detected.

NOTE: *When turning the power OFF, turn OFF the Power Switch first and then the Main Power Switch.*

Cause/Action

Check the following:

- Broken link and breakage at the bottom of the tray
- The Actuator at the rear of the Tray for operation failure
- The Tray 4 Paper Size Sensor for failure: DC140[072-200],DC330 [072-104] (PL 10.1)
- The connection between the Tray 4 Paper Size Sensor J103 and the Tray Module PWB J549 for open circuit, short circuit, and poor contact

If no problems are found, replace the following parts in sequence:

- Tray Module PWB (7525/30/35) (PL 10.9)
- Tray Module PWB (7545/56) (PL 10.9)
- MD PWB (7525/30/35) (PL 18.2A)
- MD PWB (7545/56) (PL 18.2B)
- MCU PWB (7525/30/35) (PL 18.2A)
- MCU PWB (7545/56) (PL 18.2B)

374-900 Tray 4 Feed Out Sensor Static Jam

BSD-ON:BSD 8.2 Tray Module Paper Transportation (1 of 2)

When the power was turned ON, the M/C was stopped (Cycle Down/ Shut Down), or when the interlocks were closed (all interlocks including options), the Tray 4 Feed Out Sensor detected paper.

NOTE: *When turning the power OFF, turn OFF the Power Switch first and then the Main Power Switch.*

Cause/Action

Check the following:

- The Tray 4 Feed Out Sensor for remaining paper, contamination, Actuator return failure, or improper installation
- The Tray 4 Feed Out Sensor for failure: DC330 [074-103] (PL 10.12)
- The connection between the Tray 4 Feed Out Sensor J116-2 and the Tray Module PWB J548-2 for short circuit
- The connection between the MD PWB J592-B7 and the Tray Module PWB J541-8 for short circuit

If no problems are found, replace the following parts in sequence:

- Tray Module PWB (7525/30/35) (PL 10.9)
- Tray Module PWB (7545/56) (PL 10.9)
- MD PWB (7525/30/35) (PL 18.2A)
- MD PWB (7545/56) (PL 18.2B)
- MCU PWB (7525/30/35) (PL 18.2A)
- MCU PWB (7545/56) (PL 18.2B)

374-940 Tray 4 Lift Up NG

BSD-ON:BSD 7.9 Tray 4 Paper Stacking

After the Tray 4 Lift Up has started, the Tray 4 Nudger Level Sensor did not turn ON within the specified time.

Cause/Action

1. Pull out and reinsert Tray 4 and check for improper loading of paper.
2. Enter DC122 Fail History. If this failure occurs frequently, go to the 374-210 RAP.

375-100 Tray 5 (MSI) Misfeed

BSD-ON:BSD 8.1 Tray 1 and MSI Paper Transportation

BSD-ON:BSD 7.10 Tray 5 (MSI) Paper Stacking

The Tray 5 Feed Out Sensor does not turn ON within the specified time after the Feed from Tray 5 has started.

NOTE: *When turning the power OFF, turn OFF the Power Switch first and then the Main Power Switch.*

Procedure

Turn the power ON and enter the Diag mode. Turn ON DC330 [075-001] (Tray 5 Feed/Nudger Motor). **Does the Tray 5 Feed/Nudger Motor rotate?**

Y N

Is the voltage between the MD PWB J520-1 (+) and the GND (-) +24VDC?

Y N

Go to +24VDC Power RAP (7525/30/35) +24VDC Power RAP or +24VDC Power RAP (7545/56) +24VDC Power RAP.

Turn the power OFF, then measure the Tray 5 Feed/Nudger Motor wire wound resistance. Check the resistance of the following.

- Between the MD PWB J525-B10 and the J525-B11
- Between the MD PWB J525-B12 and the J525-B13

Is the resistance approx. 4.0 Ohm for each? (At 25 degrees C / 77 degrees F)

Y N

Check the connection between the MD PWB J525 and Tray 5 Feed/Nudger Motor J269 for open circuit, short circuit, and poor contact. If no problems are found, replace the Tray 5 Feed/Nudger Motor (PL 13.2).

Measure the resistance between the MD PWB J525-B10/B11/B12/B13 and the Frame.

Is the resistance infinite for all?

Y N

Check the wires of the pins with non-infinite resistance for peeled-off coatings and short circuits due to pinching.

Replace the following parts in sequence:

- MD PWB (7525/30/35) (PL 18.2A)
- MD PWB (7545/56) (PL 18.2B)
- MCU PWB (7525/30/35) (PL 18.2A)
- MCU PWB (7545/56) (PL 18.2B)

Press the Stop button. Turn ON DC330 [077-104] (Tray 5 Feed Out Sensor). Activate the Actuator by using a sheet of paper, etc. to block/clear the light path to the Tray 5 Feed Out Sensor.

Does the display change between High/Low?

Y N

Use OF 99-2 Transmissive Sensor RAP to check the Tray 5 Feed Out Sensor.

Press the Stop button and turn the power OFF. Check the following:

- A paper transportation failure due to a foreign substance/burr on the paper path
- The Front Chute Floating Snap for disengagement
- The Tray 5 Nudger Roll and Retard Spring for deformation and snags
- The Tray 5 Feed Roll and Nudger Roll for contamination, wear, and revolution failure
- The Tray 5 Feed Roll and Nudger Roll Drive Gears for wear and damage
- Use of paper out of spec (Refer to the spec in Chapter 6 General)

If no problems are found, replace the following parts in sequence:

- MD PWB (7525/30/35) (PL 18.2A)
- MD PWB (7545/56) (PL 18.2B)
- MCU PWB (7525/30/35) (PL 18.2A)
- MCU PWB (7545/56) (PL 18.2B)

375-103 Tray 5 Feed Out Sensor Off Jam

BSD-ON:BSD 8.1 Tray 1 and MSI Paper Transportation

BSD-ON:BSD 4.1 Main Drive Control

BSD-ON:BSD 9.34 2nd BTR Contact Retract Control

BSD-ON:BSD 10.1 Fuser Drive Control (1 of 2)

The Tray 5 Feed Out Sensor does not turn OFF within the specified time after the Reg Clutch On.

NOTE: *When turning the power OFF, turn OFF the Power Switch first and then the Main Power Switch.*

Cause/Action

Check the following:

- A paper transportation failure due to foreign substances/burrs on the paper path and deformed paper guides
- The Tray 5 Takeaway Roll and Pinch Roll for contamination, wear, and revolution failure
- The Reg Roll and Pinch Roll for contamination, wear, and revolution failure
- The 2nd BTR for contamination, wear, and revolution failure
- The Tray 5 Takeaway Roll Drive Gear for wear and damage
- The Reg Roll Drive Gear for wear and damage
- The 2nd BTR Contact Retract Drive Gear for wear or damage
- The Fuser Drive Gear for wear and damage
- Use of paper out of spec (Refer to the spec in Chapter 6 General)
- The Tray 5 Feed Out Sensor for contamination, improper installation, and Actuator operation failure
- The Tray 5 Feed Out Sensor for failure: DC330 [077-104] (PL 13.4)
- The connection between the Tray 5 Feed Out Sensor J179 and the MD PWB J525 for open circuit, short circuit, and poor contact
- The Main Drive Motor for revolution failure: DC330 [042-002] (PL 3.2)
- The 2nd BTR Contact Retract Motor for revolution failure: DC330 [094-003] (Contact), DC330 [094-004] (Retract) (PL 14.4)
- The Fuser Drive Motor for revolution failure: DC330 [010-006] (PL 3.1)
- The Takeaway Clutch for failure (7525/30/35): DC330 [077-001] (PL 15.1)
- The Takeaway Motor for revolution failure (7545/56): DC330 [077-050] (PL 15.1)
- The Reg Clutch for failure: DC330 [077-002] (PL 15.2)

If no problems are found, replace the following parts in sequence:

- MD PWB (7525/30/35) (PL 18.2A)
- MD PWB (7545/56) (PL 18.2B)
- MCU PWB (7525/30/35) (PL 18.2A)
- MCU PWB (7545/56) (PL 18.2B)

375-135 Reg Sensor On Jam (Tray 5)

BSD-ON:BSD 8.4 Registration

BSD-ON:Chain 4 BSDs

BSD-ON:Chain 8 BSDs

The Reg Sensor does not turn ON within the specified time after the Reg Clutch On after the Feed from the Tray 5 has started.

NOTE: *When turning the power OFF, turn OFF the Power Switch first and then the Main Power Switch.*

Cause/Action

Check the following:

- A paper transportation failure due to a foreign substance/burr on the paper path

- The Tray 5 Takeaway Roll and Pinch Roll for contamination, wear, and revolution failure
- The Tray 5 Takeaway Roll Drive Gear for wear and damage
- Use of paper out of spec (Refer to the spec in Chapter 6 General)
- The Reg Sensor for contamination, improper installation, and Actuator operation failure
- The Reg Sensor for failure: DC330 [077-103] (PL 15.2)
- The connection between the Reg Sensor J160 and the MD PWB J523 for open circuit, short circuit, and poor contact
- The Main Drive Motor for revolution failure: DC330 [042-002] (PL 3.2)
- The Takeaway Clutch for failure (7525/30/35): DC330 [077-001] (PL 15.1)
- The Takeaway Motor for revolution failure (7545/56): DC330 [077-050] (PL 15.1)

If no problems are found, replace the following parts in sequence:

- MD PWB (7525/30/35) (PL 18.2A)
- MD PWB (7545/56) (PL 18.2B)
- MCU PWB (7525/30/35) (PL 18.2A)
- MCU PWB (7545/56) (PL 18.2B)

375-212 Tray 5 Nudger Up/Down Fault

BSD-ON:BSD 7.10 Tray 5 (MSI) Paper Size Sensing

The Tray 5 Nudger Position Sensor does not change within the specified time after the Tray 5 Nudger Up or Down operation has started.

NOTE: *When turning the power OFF, turn OFF the Power Switch first and then the Main Power Switch.*

Procedure

Turn the power ON and enter the Diag mode. Turn ON DC330 [075-002] (Tray 5 Feed/Nudger Motor). **Does the Tray 5 Feed/Nudger Motor rotate?**

Y N

Is the voltage between the MD PWB J520-1 (+) and the GND (-) +24VDC?

Y N

Go to +24VDC Power RAP (7525/30/35) +24VDC Power RAP or +24VDC Power RAP (7545/56) +24VDC Power RAP.

Turn the power OFF, then measure the Tray 5 Feed/Nudger Motor wire wound resistance. Check the resistance of the following.

- Between the MD PWB J525-B10 and the J525-B11
- Between the MD PWB J525-B12 and the J525-B13

Is the resistance approx. 4.0 Ohm for each? (At 25 degrees C / 77 degrees F)

Y N

Check the connection between the MD PWB J525 and Tray 5 Feed/Nudger Motor J269 for open circuit, short circuit, and poor contact. If no problems are found, replace the Tray 5 Feed/Nudger Motor (PL 13.2).

Measure the resistance between the MD PWB J525-B10/B11/B12/B13 and the Frame.

Is the resistance infinite for all?

Y N

Check the wires of the pins with non-infinite resistance for peeled-off coatings and short circuits due to pinching.

Replace the following parts in sequence:

- MD PWB (7525/30/35) (PL 18.2A)
- MD PWB (7545/56) (PL 18.2B)
- MCU PWB (7525/30/35) (PL 18.2A)
- MCU PWB (7545/56) (PL 18.2B)

Press the Stop button. Turn ON DC330 [075-102] (Tray 5 Nudger Position Sensor). Move the Shielding Board to block/clear the light path to the Tray 5 Nudger Position Sensor.

Does the display change between High/Low?

Y N

Use OF 99-2 Transmissive Sensor RAP to check the Tray 5 Nudger Position Sensor.

Press the Stop button and turn the power OFF.

Check the Tray 5 Nudger Roll Up/Down mechanism for mechanical loading, the springs for deformation or snags. If no problems are found, replace the following parts in sequence:

- MD PWB (7525/30/35) (PL 18.2A)
- MD PWB (7545/56) (PL 18.2B)
- MCU PWB (7525/30/35) (PL 18.2A)
- MCU PWB (7545/56) (PL 18.2B)

377-103 Fuser Exit Sensor Off Jam

BSD-ON:BSD 10.6 Fusing

BSD-ON:BSD 10.1 Fuser Drive Control (1 of 2)

BSD-ON:BSD 10.10 Fused Paper Exit 2 (3 of 4)

BSD-ON:BSD 10.11 Fused Paper Exit 2 (4 of 4)

After the Fuser Exit Sensor turned ON, the Fuser Exit Sensor did not turn OFF within the specified time.

NOTE: *When turning the power OFF, turn OFF the Power Switch first and then the Main Power Switch.*

Cause/Action

Check the following:

- A paper transportation failure due to a foreign substance/burr on the paper path
- The Fuser for wound up, stuck paper
- Each Exit Roll and Pinch Roll for contamination, wear, and revolution failure
- Each Exit Roll Drive Gear for wear and damage
- The Exit 1 Gate for operation failure
- The Exit 2 Gate for operation failure
- Use of paper out of spec (Refer to the spec in Chapter 6 General)
- The Fuser Exit Sensor for contamination, improper installation, and Actuator operation failure
- The Fuser Exit Sensor for failure: dC330 [077-101] (PL 7.1)
- The connection between the Fuser Assembly DJ600 and the MCU PWB J431 for open circuit, short circuit, and poor contact
- The Fuser Drive Motor for revolution failure: dC330 [010-006] (PL 3.1)
- The Exit 2 Drive Motor for revolution failure: dC330 [077-060] (PL 17.4)
- The Exit 2 Gate Solenoid for failure: dC330 [077-003] (PL 17.5)
- The Face Up Gate Solenoid for failure: dC330 [077-004] (PL 17.5)

If no problems are found, replace the following parts in sequence:

- MCU PWB (7525/30/35) (PL 18.2A)
- MCU PWB (7545/56) (PL 18.2B)
- MD PWB (7525/30/35) (PL 18.2A)
- MD PWB (7545/56) (PL 18.2B)

377-104 Fuser Exit Sensor Off Jam (Too Short)

BSD-ON:BSD 10.6 Fusing

BSD-ON:BSD 10.1 Fuser Drive Control (1 of 2)

BSD-ON:BSD 10.10 Fused Paper Exit 2 (3 of 4)

BSD-ON:BSD 10.11 Fused Paper Exit 2 (4 of 4)

After the Fuser Exit Sensor turned ON, the Fuser Exit Sensor turned OFF before the specified time has passed.

NOTE: *When turning the power OFF, turn OFF the Power Switch first and then the Main Power Switch.*

Cause/Action

Check the following:

- A paper transportation failure due to a foreign substance/burr on the paper path
- The Fuser for wound up, stuck paper
- Each Exit Roll and Pinch Roll for contamination, wear, and revolution failure
- Each Exit Roll Drive Gear for wear and damage
- The Exit 1 Gate for operation failure
- The Exit 2 Gate for operation failure
- Use of paper out of spec (Refer to the spec in Chapter 6 General)
- The Fuser Exit Sensor for contamination, improper installation, and Actuator operation failure
- The Fuser Exit Sensor for failure: dC330 [077-101] (PL 7.1)
- The connection between the Fuser Assembly DJ600 and the MCU PWB J431 for open circuit, short circuit, and poor contact
- The Fuser Drive Motor for revolution failure: dC330 [010-006] (PL 3.1)
- The Exit 2 Drive Motor for revolution failure: dC330 [077-060] (PL 17.4)
- The Exit 2 Gate Solenoid for failure: dC330 [077-003] (PL 17.5)
- The Face Up Gate Solenoid for failure: dC330 [077-004] (PL 17.5)

If no problems are found, replace the following parts in sequence:

- MCU PWB (7525/30/35) (PL 18.2A)
- MCU PWB (7545/56) (PL 18.2B)
- MD PWB (7525/30/35) (PL 18.2A)
- MD PWB (7545/56) (PL 18.2B)

377-105 Exit Sensor 2 Off Jam

BSD-ON:BSD 10.9 Fused Paper Exit 2 (2 of 4)

BSD-ON:BSD 10.10 Fused Paper Exit 2 (3 of 4)

BSD-ON:BSD 10.11 Fused Paper Exit 2 (4 of 4)

After the Exit 2 Sensor turned ON, the Exit 2 Sensor did not turn OFF within the specified time.

NOTE: *When turning the power OFF, turn OFF the Power Switch first and then the Main Power Switch.*

Cause/Action

Check the following:

- A paper transportation failure due to a foreign substance/burr on the paper path
- The Exit 2 Roll and Pinch Roll for contamination, wear, and revolution failure
- The Face Up Exit Roll and Pinch Roll for contamination, wear, and revolution failure
- The Exit 2 Roll Drive Gear for wear and damage
- The Exit 2 Gate for operation failure
- The Face Up Exit Roll Drive Gear for wear and damage
- Use of paper out of spec (Refer to the spec in Chapter 6 General)
- The Exit 2 Sensor for contamination, improper installation, and Actuator operation failure
- The Exit 2 Sensor for failure: dC330 [077-100] (PL 17.4)
- The connection between the Exit 2 Sensor J164 and the MD PWB J522 for open circuit, short circuit, and poor contact
- The Exit 2 Drive Motor for revolution failure: dC330 [077-060] (PL 17.4)
- The Face Up Gate Solenoid for failure: dC330 [077-004] (PL 17.5)

If no problems are found, replace the following parts in sequence:

- MD PWB (7525/30/35) (PL 18.2A)
- MD PWB (7545/56) (PL 18.2B)
- MCU PWB (7525/30/35) (PL 18.2A)
- MCU PWB (7545/56) (PL 18.2B)

377-106 Fuser Exit Sensor On Jam

BSD-ON:BSD 10.6 Fusing

BSD-ON:BSD 4.1 Main Drive Control

BSD-ON:BSD 8.1 Tray 1 and MSI Paper Transportation

BSD-ON:BSD 8.4 Tray Module Paper Transportation (3 of 4) (3TM)

BSD-ON:BSD 9.34 2nd BTR Contact Retract Control

BSD-ON:BSD 10.1 Fuser Drive Control (1 of 2)

The Fuser Exit Sensor does not turn ON within the specified time after the Reg Clutch On.

NOTE: *When turning the power OFF, turn OFF the Power Switch first and then the Main Power Switch.*

Cause/Action

Check the following:

- A paper transportation failure due to a foreign substance/burr on the paper path
- Each Takeaway Roll and Pinch Roll for contamination, wear, and revolution failure
- The Reg Roll and Pinch Roll for contamination, wear, and revolution failure
- The 2nd BTR for contamination, wear, and revolution failure
- The Fuser for wound up, stuck paper
- Each Takeaway Roll Drive Gear for wear and damage
- The Reg Roll Drive Gear for wear and damage
- The 2nd BTR Contact Retract Drive Gear for wear or damage
- The Fuser Drive Gear for wear and damage
- Use of paper out of spec (Refer to the spec in Chapter 6 General)
- The Fuser Exit Sensor for contamination, improper installation, and Actuator operation failure
- The Fuser Exit Sensor for failure: dC330 [077-101] (PL 7.1)
- The connection between the Fuser Assembly DJ600 and the MCU PWB J431 for open circuit, short circuit, and poor contact
- The Main Drive Motor for revolution failure: dC330 [042-002] (PL 3.2)
- The 2nd BTR Contact Retract Motor for revolution failure: dC330 [094-003] (Contact), dC330 [094-004] (Retract) (PL 14.4)
- The Fuser Drive Motor for revolution failure: dC330 [010-006] (PL 3.1)
- The Takeaway Clutch for failure (7525/30/35): dC330 [077-001] (PL 15.1)
- The Takeaway Motor for revolution failure (7545/56): dC330 [077-050] (PL 15.1)
- The Reg Clutch for failure: dC330 [077-002] (PL 15.2)

If no problems are found, replace the following parts in sequence:

- MCU PWB (7525/30/35) (PL 18.2A)
- MCU PWB (7545/56) (PL 18.2B)

- MD PWB (7525/30/35) (PL 18.2A)
- MD PWB (7545/56) (PL 18.2B)

377-130 Reg Sensor On Jam (Duplex Direct)

BSD-ON:BSD 8.4 Tray Module Paper Transportation (2 of 2)

BSD-ON:BSD 10.13 Duplex Transportation (2 of 2)

The Reg Sensor does not turn ON within the specified time after the Reg Clutch On after the Feed has started in Duplex Direct mode.

NOTE: *When turning the power OFF, turn OFF the Power Switch first and then the Main Power Switch.*

Cause/Action

Check the following:

- A paper transportation failure due to a foreign substance/burr on the paper path
- Each Duplex Roll and Pinch Roll for contamination, wear, and revolution failure
- Each Duplex Roll Drive Gear for wear and damage
- Use of paper out of spec (Refer to the spec in Chapter 6 General)
- The Reg Sensor for contamination, improper installation, and Actuator operation failure
- The Reg Sensor for failure: dC330 [077-103] (PL 15.2)
- The connection between the Reg Sensor J160 and the MD PWB J523 for open circuit, short circuit, and poor contact
- The Duplex Motor for revolution failure: dC330 [077-073] (PL 14.5)

If no problems are found, replace the following parts in sequence:

- MD PWB (7525/30/35) (PL 18.2A)
- MD PWB (7545/56) (PL 18.2B)
- MCU PWB (7525/30/35) (PL 18.2A)
- MCU PWB (7545/56) (PL 18.2B)

377-131 Duplex Wait Sensor On Jam

BSD-ON:BSD 10.12 Duplex Transportation (1 of 2)

BSD-ON:BSD 10.10 Fused Paper Exit 2 (3 of 4)

BSD-ON:BSD 10.11 Fused Paper Exit 2 (4 of 4)

BSD-ON:BSD 10.13 Duplex Transportation (2 of 2)

The Duplex Wait Sensor does not turn ON within the specified time after the Exit 2 Drive Motor has started rotating in the Duplex intake direction.

NOTE: *When turning the power OFF, turn OFF the Power Switch first and then the Main Power Switch.*

Cause/Action

Check the following:

- A paper transportation failure due to a foreign substance/burr on the paper path
- Each Duplex Roll and Pinch Roll for contamination, wear, and revolution failure
- Each Exit Roll and Pinch Roll for contamination, wear, and revolution failure
- Each Duplex Roll Drive Gear for wear and damage
- Each Exit Roll Drive Gear for wear and damage
- The Exit 2 Gate for operation failure
- Use of paper out of spec (Refer to the spec in Chapter 6 General)
- The Duplex Wait Sensor for contamination, improper installation, and Actuator operation failure
- The Duplex Wait Sensor for failure: dC330 [077-108] (PL 14.5)
- The connection between the Duplex Wait Sensor J175 and the MD PWB J523 for open circuit, short circuit, and poor contact
- The Duplex Motor for revolution failure: dC330 [077-073] (PL 14.5)
- The Exit 2 Drive Motor for revolution failure: dC330 [077-062] (PL 17.4)
- The Exit 2 Gate Solenoid for failure: dC330 [077-003] (PL 17.5)

If no problems are found, replace the following parts in sequence:

- MD PWB (7525/30/35) (PL 18.2A)
- MD PWB (7545/56) (PL 18.2B)
- MCU PWB (7525/30/35) (PL 18.2A)
- MCU PWB (7545/56) (PL 18.2B)

377-200 POB Sensor On Jam

BSD-ON:BSD 9.36 Stripping

BSD-ON:BSD 4.1 Main Drive Control

BSD-ON:BSD 8.1 Tray 1 and MSI Paper Transportation

BSD-ON:BSD 8.4 Tray Module Paper Transportation (3 of 4) (3TM)

BSD-ON:BSD 9.34 2nd BTR Contact Retract Control

The POB Sensor does not turn ON within the specified time after the Reg Clutch On.

NOTE: *When turning the power OFF, turn OFF the Power Switch first and then the Main Power Switch.*

Cause/Action

Check the following:

- A paper transportation failure due to a foreign substance/burr on the paper path
- Each Takeaway Roll and Pinch Roll for contamination, wear, and revolution failure
- The Reg Roll and Pinch Roll for contamination, wear, and revolution failure
- The 2nd BTR for contamination, wear, and revolution failure
- The Transfer Belt for wound up, stuck paper
- Each Takeaway Roll Drive Gear for wear and damage
- The Reg Roll Drive Gear for wear and damage
- The 2nd BTR Contact Retract Drive Gear for wear or damage
- Use of paper out of spec (Refer to the spec in Chapter 6 General)
- The POB Sensor for contamination and improper installation
- The POB Sensor for failure: dC330 [077-102] (PL 14.4)
- The connection between the POB Sensor J180 and the MD PWB J523 for open circuit, short circuit, and poor contact
- The Main Drive Motor for revolution failure: dC330 [042-002] (PL 3.2)
- The 2nd BTR Contact Retract Motor for revolution failure: dC330 [094-003] (Contact), dC330 [094-004] (Retract) (PL 14.4)
- The Takeaway Clutch for failure (7525/30/35): dC330 [077-001] (PL 15.1)
- The Takeaway Motor for revolution failure (7545/56): dC330 [077-050] (PL 15.1)
- The Regret Clutch for failure: dC330 [077-002] (PL 15.2)
- The Reg Transport Assembly (7525/30/35) (PL 15.1) for installation failure

If no problems are found, replace the following parts in sequence:

- MD PWB (7525/30/35) (PL 18.2A)
- MD PWB (7545/56) (PL 18.2B)
- MCU PWB (7525/30/35) (PL 18.2A)
- MCU PWB (7545/56) (PL 18.2B)

377-201 Reg Sensor Off Jam

BSD-ON:BSD 8.3 Tray Module Paper Transportation (2 of 2)

BSD-ON:BSD 8.4 Registration

BSD-ON:BSD 4.1 Main Drive Control

BSD-ON:BSD 8.1 Tray 1 and MSI Paper Transportation

BSD-ON:BSD 9.34 2nd BTR Contact Retract Control

BSD-ON:BSD 10.1 Fuser Drive Control (1 of 2)

The Reg Sensor does not turn OFF within the specified time after the Reg Clutch On.

NOTE: *When turning the power OFF, turn OFF the Power Switch first and then the Main Power Switch.*

Cause/Action

Check the following:

- A paper transportation failure due to a foreign substance/burr on the paper path
- Each Takeaway Roll and Pinch Roll for contamination, wear, and revolution failure
- The Reg Roll and Pinch Roll for contamination, wear, and revolution failure
- The 2nd BTR for contamination, wear, and revolution failure
- Each Exit Roll and Pinch Roll for contamination, wear, and revolution failure
- Each Takeaway Roll Drive Gear for wear and damage
- The Reg Roll Drive Gear for wear and damage
- The 2nd BTR Contact Retract Drive Gear for wear or damage
- The Fuser Drive Gear for wear and damage
- Each Exit Roll Drive Gear for wear and damage
- Use of paper out of spec (Refer to the spec in Chapter 6 General)
- The Reg Sensor for contamination, improper installation, and Actuator operation failure
- The Reg Sensor for failure: dC330 [077-103] (PL 15.2)
- The connection between the Reg Sensor J160 and the MD PWB J523 for open circuit, short circuit, and poor contact
- The Main Drive Motor for revolution failure: dC330 [042-002] (PL 3.2)
- The 2nd BTR Contact Retract Motor for revolution failure: dC330 [094-003] (Contact), dC330 [094-004] (Retract) (PL 14.4)
- The Fuser Drive Motor for revolution failure: dC330 [010-006] (PL 3.1)
- The Takeaway Clutch for failure (7525/30/35): dC330 [077-001] (PL 15.1)
- The Takeaway Motor for revolution failure (7545/56): dC330 [077-050] (PL 15.1)
- The Reg Clutch for failure: dC330 [077-002] (PL 15.2)
- The Reg Transport Assembly (7525/30/35) (PL 15.1) for installation failure

If no problems are found, replace the following parts in sequence:

- MD PWB (7525/30/35) (PL 18.2A)
- MD PWB (7545/56) (PL 18.2B)
- MCU PWB (7525/30/35) (PL 18.2A)
- MCU PWB (7545/56) (PL 18.2B)

377-202 Fuser Exit Sensor On Jam

BSD-ON:BSD 10.6 Fusing

BSD-ON:BSD 4.1 Main Drive Control

BSD-ON:BSD 8.1 Tray 1 and MSI Paper Transportation

BSD-ON:BSD 8.4 Tray Module Paper Transportation (3 of 4) (3TM)

BSD-ON:BSD 9.34 2nd BTR Contact Retract Control

BSD-ON:BSD 10.1 Fuser Drive Control (1 of 2)

The Fuser Exit Sensor does not turn ON within the specified time after the Reg Clutch On.

NOTE: *When turning the power OFF, turn OFF the Power Switch first and then the Main Power Switch.*

Cause/Action

Check the following:

- A paper transportation failure due to a foreign substance/burr on the paper path
- Each Takeaway Roll and Pinch Roll for contamination, wear, and revolution failure
- The Reg Roll and Pinch Roll for contamination, wear, and revolution failure
- The 2nd BTR for contamination, wear, and revolution failure
- The Fuser for wound up, stuck paper
- Each Takeaway Roll Drive Gear for wear and damage
- The Reg Roll Drive Gear for wear and damage
- The 2nd BTR Contact Retract Drive Gear for wear or damage
- The Fuser Drive Gear for wear and damage
- Use of paper out of spec (Refer to the spec in Chapter 6 General)
- The Fuser Exit Sensor for contamination, improper installation, and Actuator operation failure
- The Fuser Exit Sensor for failure: dC330 [077-101] (PL 7.1)
- The connection between the Fuser Assembly DJ600 and the MCU PWB J431 for open circuit, short circuit, and poor contact
- The Main Drive Motor for revolution failure: dC330 [042-002] (PL 3.2)
- The 2nd BTR Contact Retract Motor for revolution failure: dC330 [094-003] (Contact), dC330 [094-004] (Retract) (PL 14.4)
- The Fuser Drive Motor for revolution failure: dC330 [010-006] (PL 3.1)
- The Takeaway Clutch for failure (7525/30/35): dC330 [077-001] (PL 15.1)
- The Takeaway Motor for revolution failure (7545/56): dC330 [077-050] (PL 15.1)
- The Reg Clutch for failure: dC330 [077-002] (PL 15.2)

If no problems are found, replace the following parts in sequence:

- MCU PWB (7525/30/35) (PL 18.2A)
- MCU PWB (7545/56) (PL 18.2B)
- MD PWB (7525/30/35) (PL 18.2A)
- MD PWB (7545/56) (PL 18.2B)

377-203 Exit Sensor 2 On Jam

BSD-ON:BSD 10.9 Fused Paper Exit 2 (2 of 4)

BSD-ON:BSD 10.1 Fuser Drive Control (1 of 2)

BSD-ON:BSD 10.10 Fused Paper Exit 2 (3 of 4)

BSD-ON:BSD 10.11 Fused Paper Exit 2 (4 of 4)

After the Fuser Exit Sensor turned ON, the Exit 2 Sensor did not turn ON within the specified time.

NOTE: *When turning the power OFF, turn OFF the Power Switch first and then the Main Power Switch.*

Cause/Action

Check the following:

- A paper transportation failure due to a foreign substance/burr on the paper path
- Remove the Finisher and H-Transport to verify removal of the upper and lower exit paper weight (PL 17.1). If either weight is still in place, remove it and reinstall the Finisher and H-Transport.
- Each Exit Roll and Pinch Roll for contamination, wear, and revolution failure
- The Fuser for wound up, stuck paper
- Each Exit Roll Drive Gear for wear and damage
- The Exit 2 Gate for operation failure
- Use of paper out of spec (Refer to the spec in Chapter 6 General)
- The Exit 2 Sensor for contamination, improper installation, and Actuator operation failure
- The Exit 2 Sensor for failure: dC330 [077-100] (PL 17.4)
- The connection between the Exit 2 Sensor J164 and the MD PWB J522 for open circuit, short circuit, and poor contact
- The Fuser Drive Motor for revolution failure: dC330 [010-006] (PL 3.1)
- The Exit 2 Drive Motor for revolution failure: dC330 [077-060] (PL 17.4)
- The Exit 2 Gate Solenoid for failure: dC330 [077-003] (PL 17.5)

If no problems are found, replace the following parts in sequence:

- MD PWB (7525/30/35) (PL 18.2A)
- MD PWB (7545/56) (PL 18.2B)
- MCU PWB (7525/30/35) (PL 18.2A)
- MCU PWB (7545/56) (PL 18.2B)

377-204 Fuser Exit Sensor Off Jam

BSD-ON:BSD 10.6 Fusing

BSD-ON:BSD 10.1 Fuser Drive Control (1 of 2)

BSD-ON:BSD 10.10 Fused Paper Exit 2 (3 of 4)

BSD-ON:BSD 10.11 Fused Paper Exit 2 (4 of 4)

After the Fuser Exit Sensor turned ON, the Fuser Exit Sensor did not turn OFF within the specified time.

NOTE: *When turning the power OFF, turn OFF the Power Switch first and then the Main Power Switch.*

Cause/Action

Check the following:

- A paper transportation failure due to a foreign substance/burr on the paper path
- The Fuser for wound up, stuck paper
- Each Exit Roll and Pinch Roll for contamination, wear, and revolution failure
- Each Exit Roll Drive Gear for wear and damage
- The Exit 1 Gate for operation failure
- The Exit 2 Gate for operation failure
- Use of paper out of spec (Refer to the spec in Chapter 6 General)
- The Fuser Exit Sensor for contamination, improper installation, and Actuator operation failure
- The Fuser Exit Sensor for failure: dC330 [077-101] (PL 7.1)
- The connection between the Fuser Assembly DJ600 and the MCU PWB J431 for open circuit, short circuit, and poor contact
- The Fuser Drive Motor for revolution failure: dC330 [010-006] (PL 3.1)
- The Exit 2 Drive Motor for revolution failure: dC330 [077-060] (PL 17.4)
- The Exit 2 Gate Solenoid for failure: dC330 [077-003] (PL 17.5)
- The Face Up Gate Solenoid for failure: dC330 [077-004] (PL 17.5)

If no problems are found, replace the following parts in sequence:

- MCU PWB (7525/30/35) (PL 18.2A)
- MCU PWB (7545/56) (PL 18.2B)
- MD PWB (7525/30/35) (PL 18.2A)
- MD PWB (7545/56) (PL 18.2B)

377-205 Fuser Exit Sensor Off Jam (Too Short)

BSD-ON:BSD 10.6 Fusing

BSD-ON:BSD 10.1 Fuser Drive Control (1 of 2)

BSD-ON:BSD 10.10 Fused Paper Exit 2 (3 of 4)

BSD-ON:BSD 10.11 Fused Paper Exit 2 (4 of 4)

After the Fuser Exit Sensor turned ON, the Fuser Exit Sensor turned OFF before the specified time has passed.

NOTE: *When turning the power OFF, turn OFF the Power Switch first and then the Main Power Switch.*

Cause/Action

Check the following:

- A paper transportation failure due to a foreign substance/burr on the paper path
- The Fuser for wound up, stuck paper
- Each Exit Roll and Pinch Roll for contamination, wear, and revolution failure
- Each Exit Roll Drive Gear for wear and damage
- The Exit 1 Gate for operation failure
- The Exit 2 Gate for operation failure
- Use of paper out of spec (Refer to the spec in Chapter 6 General)
- The Fuser Exit Sensor for contamination, improper installation, and Actuator operation failure
- The Fuser Exit Sensor for failure: dC330 [077-101] (PL 7.1)
- The connection between the Fuser Assembly DJ600 and the MCU PWB J431 for open circuit, short circuit, and poor contact
- The Fuser Drive Motor for revolution failure: dC330 [010-006] (PL 3.1)
- The Exit 2 Drive Motor for revolution failure: dC330 [077-060] (PL 17.4)
- The Exit 2 Gate Solenoid for failure: dC330 [077-003] (PL 17.5)
- The Face Up Gate Solenoid for failure: dC330 [077-004] (PL 17.5)

If no problems are found, replace the following parts in sequence:

- MCU PWB (7525/30/35) (PL 18.2A)
- MCU PWB (7545/56) (PL 18.2B)
- MD PWB (7525/30/35) (PL 18.2A)
- MD PWB (7545/56) (PL 18.2B)

377-211 Tray Module Kind Mismatch

BSD-ON:BSD 3.2 PWB Communication (2 of 7)

A different type of Tray Module is connected.

NOTE: *When turning the power OFF, turn OFF the Power Switch first and then the Main Power Switch.*

Cause/Action

1. Turn the power OFF and ON.
2. Turn the power OFF and check the following:
   - The DIP Switch settings on the Tray Module PWB

Table 1 DIP Switch Settings

Tray Type	SW1	SW2	SW3	SW4
1TM	ON	OFF	ON	ON
TTM	ON	ON	OFF	ON
3TM	ON	ON	ON	ON

   - The connection between the MD PWB J592 and the Tray Module PWB J541 for open circuit, short circuit, and poor contact

   If no problems are found, replace the following parts in sequence:
   - Tray Module PWB (7525/30/35) (PL 10.9)
   - Tray Module PWB (7545/56) (PL 10.9)
   - MD PWB (7525/30/35) (PL 18.2A)
   - MD PWB (7545/56) (PL 18.2B)
   - MCU PWB (7525/30/35) (PL 18.2A)
   - MCU PWB (7545/56) (PL 18.2B)

377-212 Tray Module Reset Fault

BSD-ON:BSD 3.2 PWB Communication (2 of 7)

BSD-ON:BSD 1.9 Option DC Power Distribution

The Tray Module reset was detected.

NOTE: *When turning the power OFF, turn OFF the Power Switch first and then the Main Power Switch.*

Cause/Action

1. Turn the power OFF and ON.
2. Check whether the voltage between the Tray Module PWB J541-12 (+) and the GND (-) is +5VDC and whether the voltage between the Tray Module PWB J541-10 (+) and the GND (-) is +24VDC.
3. Turn the power OFF and check the connection between the MD PWB J592 and the Tray Module PWB J541 for open circuit, short circuit, and poor contact.

   If no problems are found, replace the following parts in sequence:
   - Tray Module PWB (7525/30/35) (PL 10.9)
   - Tray Module PWB (7545/56) (PL 10.9)
   - MD PWB (7525/30/35) (PL 18.2A)
   - MD PWB (7545/56) (PL 18.2B)
   - MCU PWB (7525/30/35) (PL 18.2A)
   - MCU PWB (7545/56) (PL 18.2B)

377-214 Tray Module Logic Fault

BSD-ON:BSD 3.2 PWB Communication (2 of 7)

I/F mismatch between the IOT and the Tray Module was detected.

NOTE: *When turning the power OFF, turn OFF the Power Switch first and then the Main Power Switch.*

Cause/Action

1. Turn the power OFF and ON.
2. Turn the power OFF and check the connection between the MD PWB J592 and the Tray Module PWB J541 for open circuit, short circuit, and poor contact.

   If no problems are found, replace the following parts in sequence:
   - Tray Module PWB (7525/30/35) (PL 10.9)
   - Tray Module PWB (7545/56) (PL 10.9)
   - MD PWB (7525/30/35) (PL 18.2A)
   - MD PWB (7545/56) (PL 18.2B)
   - MCU PWB (7525/30/35) (PL 18.2A)
   - MCU PWB (7545/56) (PL 18.2B)

377-215 Tray Module Communication Fault

BSD-ON:BSD 3.2 PWB Communication (2 of 7)

Communication error between Tray Module PWB and MCU PWB was detected.

NOTE: *When turning the power OFF, turn OFF the Power Switch first and then the Main Power Switch.*

Cause/Action

1. Turn the power OFF and ON.
2. Turn the power OFF and check the connection between the MD PWB J592 and the Tray Module PWB J541 for open circuit, short circuit, and poor contact.

   If no problems are found, replace the following parts in sequence:

   - Tray Module PWB (7525/30/35) (PL 10.9)
   - Tray Module PWB (7545/56) (PL 10.9)
   - MD PWB (7525/30/35) (PL 18.2A)
   - MD PWB (7545/56) (PL 18.2B)
   - MCU PWB (7525/30/35) (PL 18.2A)
   - MCU PWB (7545/56) (PL 18.2B)

377-300 Front Cover Interlock Open

BSD-ON:BSD 1.10 Power Interlock Switching (1 of 2)

The Front Cover is open.

NOTE: *When turning the power OFF, turn OFF the Power Switch first and then the Main Power Switch.*

Cause/Action

Check the following:

- The Front Cover for damage or mismatch.
- The Front Cover Interlock Switch for failure: dC330 [077-303] (PL 18.5)
- The connection between the Front Cover Interlock Switch J101 and the MD PWB J521 for open circuit, short circuit, and poor contact

If no problems are found, replace the following parts in sequence:

- MD PWB (7525/30/35) (PL 18.2A)
- MD PWB (7545/56) (PL 18.2B)
- MCU PWB (7525/30/35) (PL 18.2A)
- MCU PWB (7545/56) (PL 18.2B)

377-301 L/H Cover Interlock Open

BSD-ON:BSD 1.10 Power Interlock Switching (1 of 2)

The L/H Cover is open.

NOTE: *When turning the power OFF, turn OFF the Power Switch first and then the Main Power Switch.*

Cause/Action

Check the following:

- The L/H Cover Unit for damage or mismatch
- The L/H Cover Interlock Switch for failure: dC330 [077-300] (PL 14.1)
- The connection between the L/H Cover Interlock Switch J100 and the MD PWB J534 for open circuit, short circuit, and poor contact

If no problems are found, replace the following parts in sequence:

- MD PWB (7525/30/35) (PL 18.2A)
- MD PWB (7545/56) (PL 18.2B)
- MCU PWB (7525/30/35) (PL 18.2A)
- MCU PWB (7545/56) (PL 18.2B)

377-305 Tray Module L/H Cover Open

BSD-ON:BSD 8.2 Tray Module Paper Transportation (1 of 2)

The Tray Module L/H Cover is open.

NOTE: *When turning the power OFF, turn OFF the Power Switch first and then the Main Power Switch.*

Cause/Action

1. Turn the power OFF and ON.
2. Check the following:
   - The Tray Module L/H Cover for damage or mismatch
   - The Tray Module L/H Cover Switch for failure: dC330 [077-306] (PL 10.12)
   - The connection between the Tray Module L/H Cover Switch J104 and the Tray Module PWB J549 for open circuit, short circuit, and poor contact

   If no problems are found, replace the Tray Module PWB.
   - Tray Module PWB (7525/30/35) (PL 10.9)
   - Tray Module PWB (7545/56) (PL 10.9)

377-307 Duplex Cover Open

BSD-ON:BSD 10.12 Duplex Transportation (1 of 2)

The Duplex Cover is open.

NOTE: *When turning the power OFF, turn OFF the Power Switch first and then the Main Power Switch.*

Cause/Action

Check the following:

- The Duplex Cover for damage or mismatch.
- The Duplex Cover Switch for failure: dC330 [077-305] (PL 14.5)
- The connection between the Duplex Cover Switch J176 and the MD PWB J523 for open circuit, short circuit, and poor contact

If no problems are found, replace the following parts in sequence:

- MD PWB (7525/30/35) (PL 18.2A)
- MD PWB (7545/56) (PL 18.2B)
- MCU PWB (7525/30/35) (PL 18.2A)
- MCU PWB (7545/56) (PL 18.2B)

377-308 L/H High Cover Open

BSD-ON:BSD 10.8 Fused Paper Exit 2 (1 of 4)

The L/H High Cover is open.

NOTE: *When turning the power OFF, turn OFF the Power Switch first and then the Main Power Switch.*

Cause/Action

Check the following:

- The L/H High Cover Assembly for damage or mismatch
- The L/H High Cover Switch for failure: dC330 [077-302] (PL 17.4)
- The connection between the L/H High Cover Switch J168 and the MD PWB J522 for open circuit, short circuit, and poor contact

If no problems are found, replace the following parts in sequence:

- MD PWB (7525/30/35) (PL 18.2A)
- MD PWB (7545/56) (PL 18.2B)
- MCU PWB (7525/30/35) (PL 18.2A)
- MCU PWB (7545/56) (PL 18.2B)

377-312 Feeder Communication Fault

BSD-ON:BSD 3.7 PWB Communication (7 of 7)

BSD-ON:BSD 1.9 Option DC Power Distribution

Communication failure between the HCF and the IOT was detected.

NOTE: *When turning the power OFF, turn OFF the Power Switch first and then the Main Power Switch.*

Cause/Action

1. Turn the power OFF and ON.
2. Turn the power OFF and check the connection between the MD PWB (PL 18.2A/PL 18.2B) and the HCF PWB for open circuit, short circuit, and poor contact. Also, check the power supply at the HCF.

   If no problems are found, replace the following parts in sequence:
   - MD PWB (7525/30/35) (PL 18.2A)
   - MD PWB (7545/56) (PL 18.2B)
   - MCU PWB (7525/30/35) (PL 18.2A)
   - MCU PWB (7545/56) (PL 18.2B)

377-315 Tray Module L/H Cover Open

BSD-ON:BSD 8.2 Tray Module Paper Transportation (1 of 2)

The Tray Module L/H Cover is open.

NOTE: *When turning the power OFF, turn OFF the Power Switch first and then the Main Power Switch.*

Cause/Action

1. Turn the power OFF and ON.
2. Check the following:
   - The Tray Module L/H Cover for damage or mismatch
   - The Tray Module L/H Cover Switch for failure: dC330 [077-306] (PL 10.12)
   - The connection between the Tray Module L/H Cover Switch J104 and the Tray Module PWB J549 for open circuit, short circuit, and poor contact

   If no problems are found, replace the Tray Module PWB.
   - Tray Module PWB (7525/30/35) (PL 10.9)
   - Tray Module PWB (7545/56) (PL 10.9)

377-316 P/H Module Logic Fault

BSD-ON:BSD 3.2 PWB Communication (2 of 7)

A fatal error was detected in the Tray Module.

NOTE: *When turning the power OFF, turn OFF the Power Switch first and then the Main Power Switch.*

Cause/Action

1. Turn the power OFF and ON.
2. Turn the power OFF and check the connection between the MD PWB J592 and the Tray Module PWB J541 for open circuit, short circuit, and poor contact.

   If no problems are found, replace the following parts in sequence:
   - Tray Module PWB (7525/30/35) (PL 10.9)
   - Tray Module PWB (7545/56) (PL 10.9)
   - MD PWB (7525/30/35) (PL 18.2A)
   - MD PWB (7545/56) (PL 18.2B)
   - MCU PWB (7525/30/35) (PL 18.2A)
   - MCU PWB (7545/56) (PL 18.2B)

377-320 All Feed Tray Broken

BSD-ON:-

All the Feed Trays that are connected to the IOT were detected to have malfunctioned.

Cause/Action

Enter DC122 Fail History. Go to the RAP of the affected Paper Tray.

377-602 Transparency Sensor Fault

BSD-ON:BSD 8.4 Tray Module Paper Transportation (3 of 4) (3TM)

An abnormal value was detected from the Transparency Sensor. (This is a hidden failure. Data is only recorded in history.)

NOTE: *When turning the power OFF, turn OFF the Power Switch first and then the Main Power Switch.*

Cause/Action

Check the following:

- The Transparency Sensor and Reflective Prism for contamination and improper installation
- Use of Transparency out of spec (Refer to the spec in Chapter 6 General)
- The Transparency Sensor for failure: DC140[077-200] (PL 15.2)
- The connection between the Transparency Sensor J161 and the MD PWB J523 for open circuit, short circuit, and poor contact
- The connector (P/J452) between the MD PWB and the MCU PWB for poor connection

If no problems are found, replace the following parts in sequence:

- MD PWB (7525/30/35) (PL 18.2A)
- MD PWB (7545/56) (PL 18.2B)
- MCU PWB (7525/30/35) (PL 18.2A)
- MCU PWB (7545/56) (PL 18.2B)

377-900 Reg Sensor Static Jam

BSD-ON:BSD 8.3 Tray Module Paper Transportation (2 of 2)

When the power was turned ON, the M/C was stopped (Cycle Down/ Shut Down), or when the interlocks were closed (all interlocks including options), the Reg Sensor detected paper.

NOTE: *When turning the power OFF, turn OFF the Power Switch first and then the Main Power Switch.*

Cause/Action

Check the following:

- The Reg Sensor for remaining paper, contamination, Actuator return failure, or improper installation
- The Reg Sensor for failure: dC330 [077-103] (PL 15.2)
- The connection between the Reg Sensor J160 and the MD PWB J523 for short circuit
- Check the return Spring (PL 23.11) item 38 and replace if damaged or missing
- Check to see the timing between the eject motor Gear (PL 23.11) item 1, and the clamp drive Gear item 2, is correct allowing the clamp to open

If no problems are found, replace the following parts in sequence:

- MD PWB (7525/30/35) (PL 18.2A)
- MD PWB (7545/56) (PL 18.2B)
- MCU PWB (7525/30/35) (PL 18.2A)
- MCU PWB (7545/56) (PL 18.2B)

377-901 Exit Sensor 1 Static Jam

BSD-ON:BSD 10.6 Fusing

When the power was turned ON, the M/C was stopped (Cycle Down/ Shut Down), or when the interlocks were closed (all interlocks including options), the Fuser Exit Sensor detected paper.

NOTE: *When turning the power OFF, turn OFF the Power Switch first and then the Main Power Switch.*

Cause/Action

Check the following:

- The Lower Exit Pinch Rollers (PL 17.2) may be missing.
- The Fuser Exit Sensor for remaining paper, contamination, actuator return failure, or improper installation
- The Fuser Exit Sensor for failure: dC330 [077-101] (PL 7.1)
- The connection between the Fuser Assembly DJ600 and the MCU PWB J431 for short circuit
- Check the return Spring (PL 23.11) item 38 and replace if damaged or missing.
- Check to see if the timing between the eject motor Gear (PL 23.11) item 1, and the clamp drive Gear item 2, is correct allowing the clamp to open

If no problems are found, replace the MCU PWB.

- MCU PWB (7525/30/35) (PL 18.2A)
- MCU PWB (7545/56) (PL 18.2B)

377-902 Exit Sensor 2 Static Jam

BSD-ON:BSD 10.9 Fused Paper Exit 2 (2 of 4)

When the power was turned ON, the M/C was stopped (Cycle Down/ Shut Down), or when the interlocks were closed (all interlocks including options), the Exit 2 Sensor detected paper.

NOTE: *When turning the power OFF, turn OFF the Power Switch first and then the Main Power Switch.*

Cause/Action

Check the following:

- The Exit 2 Sensor for remaining paper, contamination, Actuator return failure, or improper installation
- The Exit 2 Sensor for failure: dC330 [077-100] (PL 17.4)
- The connection between the Exit 2 Sensor J164 and the MD PWB J522 for short circuit
- The L/H High Cover Assembly for damage or mismatch

If no problems are found, replace the following parts in sequence:

- MD PWB (7525/30/35) (PL 18.2A)
- MD PWB (7545/56) (PL 18.2B)
- MCU PWB (7525/30/35) (PL 18.2A)
- MCU PWB (7545/56) (PL 18.2B)

377-903 POB Sensor Static Jam

BSD-ON:BSD 9.36 Stripping

When the power was turned ON, the M/C was stopped (Cycle Down/ Shut Down), or when the interlocks were closed (all interlocks including options), the POB Sensor detected paper.

NOTE: *When turning the power OFF, turn OFF the Power Switch first and then the Main Power Switch.*

Cause/Action

Check the following:

- The Lower Exit Pinch Rollers (PL 17.2) may be missing.
- The POB Sensor for remaining paper, contamination, or improper installation
- The POB Sensor for failure: dC330 [077-102] (PL 14.4)
- The connection between the POB Sensor J180 and the MD PWB J523 for short circuit
- Check the return Spring (PL 23.11) item 38 and replace if damaged or missing
- Check to see the timing between the eject motor Gear (PL 23.11) item 1, and the clamp drive Gear item 2, is correct allowing the clamp to open

If no problems are found, replace the following parts in sequence:

- MD PWB (7525/30/35) (PL 18.2A)
- MD PWB (7545/56) (PL 18.2B)
- MCU PWB (7525/30/35) (PL 18.2A)
- MCU PWB (7545/56) (PL 18.2B)

377-907 Duplex Wait Sensor Static Jam

BSD-ON:BSD 10.12 Duplex Transportation (1 of 2)

When the power was turned ON, the M/C was stopped (Cycle Down/ Shut Down), or when the interlocks were closed (all interlocks including options), the Duplex Wait Sensor detected paper.

NOTE: *When turning the power OFF, turn OFF the Power Switch first and then the Main Power Switch.*

Cause/Action

Check the following:

- The Duplex Wait Sensor for remaining paper, contamination, Actuator return failure, or improper installation
- The Duplex Wait Sensor for failure: dC330 [077-108] (PL 14.5)
- The connection between the Duplex Wait Sensor J175 and the MD PWB J523 for short circuit

If no problems are found, replace the following parts in sequence:

- MD PWB (7525/30/35) (PL 18.2A)
- MD PWB (7545/56) (PL 18.2B)
- MCU PWB (7525/30/35) (PL 18.2A)
- MCU PWB (7545/56) (PL 18.2B)

378-101 HCF to Feed Out Sensor Fault RAP

BSD-ON:BSD 8.2 Tray Module Paper Transportation (1 of 2)

BSD-ON:BSD 8.3 Tray Module Paper Transportation (2 of 2)

The Tray 2 Feed Out Sensor did not come on within the specified time after the start of feed from Tray 6 (HCF).

Initial Actions

- Clear any paper jam and switch the power off then on.
- Check for out-of-spec paper.
- Check paper path for a foreign object/burr/piece of paper

Procedure

Execute dC330 [072-103], Tray 2 Feed Out Sensor. Block and unblock the Tray 2 Feed Out Sensor. **The display changes.**

Y N

Go to BSD 8.2 and check the wires from Tray 2 Feed Out Sensor P/J108-1, 2, and 3 to Tray Module PWB P/J549A-A3, A2, and A1 for an open wire, short or poor contact.
If OK, replace the Tray 2 Feed Out Sensor (PL 10.12) before replacing the Tray Module PWB (PL 10.9 -3TM, PL 11.17 - TTM).

Execute dC330 [077-031], TM Takeaway Motor. **There is operation noise from the Takeaway Motor.**

Y N

Check the circuit between P/J224 on the TM Takeaway Motor and P/J551 on the Tray Module PWB for an open or a short circuit, or a loose or damaged connector. **The wires are OK.**

Y N

Repair as required.

Disconnect the TM Takeaway Motor. Measure the resistance between P/J224 pin 2 and each of the remaining pins (1, 3, 4, 5, 6). **The resistances are all approx. 100 Ohm at 25 degrees C / 77 degrees F.**

Y N

Replace the Takeaway Motor (PL 10.9 - 3TM, PL 11.16 - TTM).

There is +24VDC from P/J551 pins 5 and 6, to GND.

Y N

Go to +24VDC Power RAP (7525/30/35) or +24VDC Power RAP (7545/56) and troubleshoot the +24VDC circuit.

Replace the Takeaway Motor. If the problem persists, replace the Tray Module PWB (PL 10.9 -3TM, PL 11.17 - TTM).

Check the following:

- Takeaway Rolls 1 and 2 and 3 for dirt/paper particles/wear/a poor rotation
- HCF and IOT for a poor docking
- HCF Transport Belt for poor tension
- HCF Transport Roll for dirt/paper particles/wear/a poor rotation
- HCF Takeaway Rolls 1-3 for dirt/ paper particles/wear/a poor rotation
- HCF Exit Roll for dirt/ paper particles/wear/a poor rotation
- Drive gears for wear/breakage
- If the results of the above checks are OK, replace Tray Module PWB (PL 10.9 -3TM, PL 11.17 - TTM) and the MD PWB (PL 18.2A - 7525/30/35, PL 18.2B - 7545/56) one at a time in the order shown.

378-102 HCF to Registration Sensor Fault RAP

BSD-ON:BSD 8.4 Registration

The paper transported from HCF did not turn on the Registration Sensor within the specified time.

Initial Actions

- Clear any jam and switch the power off then on.
- Check for out-of-spec paper.
- Paper Path for a foreign object/burr/piece of paper

Procedure

Execute dC330 [077-103], Reg. Sensor. Block and unblock the Reg. Sensor. **The display changes.**

Y N

Go to BSD 8.4 and check the following for an open wire, short, or poor contact:

- Reg Sensor P/J160-2 to MCU PWB P/J523-A2
- Reg Sensor P/J160-1 to MCU PWB P/J523-A3
- Reg Sensor P/J160-3 to MCU PWB P/J523-A1

If OK, replace the Reg. Sensor (PL 15.2) before replacing the MCU PWB(PL 18.2A - 7525/30/35, PL 18.2B - 7545/56).

Execute dC330 [077-031], TM Takeaway Motor. **There is operation noise from the Take-away Motor.**

Y N

Check the circuit between P/J224 on the TM Takeaway Motor and P/J551 on the Tray Module PWB for an open or a short circuit, or a loose or damaged connector. **The wires are OK.**

Y N

Repair as required.

Disconnect the TM Takeaway Motor. Measure the resistance between P/J224 pin 2 and each of the remaining pins (1, 3, 4, 5, 6). **The resistances are all approx. 100 Ohm at 25 degrees C / 77 degrees F.**

Y N

Replace the TM Takeaway Motor (PL 10.9 - 3TM, PL 11.16 - TTM).

There is +24VDC from P/J551 pins 5 and 6, to GND.

Y N

Go to +24VDC Power RAP (7525/30/35) or +24VDC Power RAP (7545/56) and troubleshoot the +24VDC circuit.

Replace the TM Takeaway Motor. If the problem persists, replace the Tray Module PWB (PL 10.9 -3TM, PL 11.17 - TTM).

Check the following:

- Takeaway Rolls 1 and 2 and 3 for dirt/paper particles/wear/a poor rotation
- HCF and IOT for a poor docking
- HCF Transport Belt for poor tension
- HCF Transport Roll for dirt/paper particles/wear/a poor rotation
- HCF Takeaway Rolls 1-3 for dirt/ paper particles/wear/a poor rotation
- HCF Exit Roll for dirt/ paper particles/wear/a poor rotation
- Drive gears for wear/breakage
- If the results of the above checks are OK, replace Tray Module PWB (PL 10.9 -3TM, PL 11.17 - TTM) and the MD PWB (PL 18.2A - 7525/30/35, PL 18.2B - 7545/56) one at a time in the order shown.

378-151 HCF Feed Out Sensor Fault RAP

BSD-ON:BSD 8.8 HCF Paper Transportation

The paper transported from HCF did not turn on the Tray 6 Feed Out Sensor within the specified time.

Initial Actions

- Clear any jam and switch the power off then on.
- Check for out-of-spec paper.
- Paper Path for a foreign object/burr/piece of paper

Procedure

Execute dC330 [078-101], Tray 6 Feed out Sensor. Block and unblock the Feed Out Sensor. **The display changes.**

Y N

Go to BSD 8.8 HCF Paper Transportation and check the following for an open wire, short or poor contact:

- Feed Out Sensor PF/JF67-2 to HCF PWB PF/JF01-2
- Feed Out Sensor PF/JF67-1 to HCF PWB PF/JF01-3
- Feed Out Sensor PF/JF67-3 to HCF PWB PF/JF01-1

If OK, replace the Feed Out Sensor (PL 28.8) before replacing the HCF PWB (PL 28.8).

Execute dC330 [078-007], Tray 6 Takeaway Motor. **There is operation noise from the Takeaway Motor.**

Y N

Check the circuit between PF/JF57 on the Tray 6 Takeaway Motor and PF/JF06 on the HCF PWB for an open or a short circuit, or a loose or damaged connector. **The wires are OK.**

Y N

Repair as required.

Check that the resistance through Tray 6 Takeaway Motor is approx. 0.8 ohms (at 25 degrees C / 77 degrees F) at the measurement points below.

- PF/JF57-3 to pins 1/2
- PF/JF57-4 to pins 5/6

The resistances are OK

Y N

Replace the Tray 6 Takeaway Motor (PL 28.8)

There is +24VDC from PF/JF06 pins 9 and 10, to GND.

Y N

Go to HCF +24VDC Wirenet and troubleshoot the +24VDC circuit.

Replace the Tray 6 Takeaway Motor (PL 28.8). If the problem persists, replace the HCF PWB (PL 28.8).

Open and close Tray 6. **The Tray 6 Lift/Feed Motor operates**

Y N

Check the circuit between PF/JF57 on the Tray 6 Lift/Feed Motor and PF/JF06 on the HCF PWB for an open or a short circuit, or a loose or damaged connector. **The wires are OK.**

Y N

Repair as required.

Check that the resistance through Tray 6 Takeaway Motor is approx. 0.8 ohms at the measurement points below.

- PF/JF57-3 to pins 1/2
- PF/JF57-4 to pins 5/6

The resistances are OK+

Y N

Replace the Tray 6 Takeaway Motor (PL 28.8).

There is +24VDC from PF/JF06 pins 9 and 10, to GND.

Y N

Go to HCF +24VDC Wirenet and troubleshoot the +24VDC circuit.

Replace the Tray 6 Takeaway Motor (PL 28.8). If the problem persists, replace the HCF PWB (PL 28.8).

Check the HCF paper lift components and repair as required (PL 28.3).

378-210 Tray 3 (TTM) Lift Failure RAP

BSD-ON:BSD 7.15 Tray 3 Paper Size Stacking (TTM)

BSD-ON:BSD 1.9 Option DC Power Distribution

After the Tray 3 Lift/Feed Motor turned on, the Tray 3 Level Sensor did not turn on within the specified time.

Initial Actions

- Reload paper in the tray correctly.
- Remove foreign substances in the tray.
- Power OFF/ON

Procedure

Execute dC330 [073-004] Tray 3 Lift/Feed Motor On. **The Tray 3 Lift/Feed Motor can be heard.**

Y N

There is +24 VDC from P/J541 pin 10 on the Tray Module PWB to GND

Y N

Refer to BSD 1.9 Option DC Power Distribution and the +24VDC-4 Wirenet to troubleshoot the 24 VDC circuit.

Turn OFF the power. Remove the Tray 3 Lift/Feed Motor, then measure the following resistances.

- Between P/J222 pin-1 and P/J222 pin-2
- Between P/J222 pin-3 and P/J222 pin-4

All resistances are approx. 4 Ohms at 25 degrees C / 77 degrees F

Y N

Replace the Tray 3 Lift/Feed Motor ().

Check the wires between P/J222 on the Tray 3 Lift/Feed Motor and P/J550 on the Tray Module PWB for an open or shorted circuit, or a loose or damaged connector. **The wires are OK.**

Y N

Repair as required.

Replace the Tray 3 Feed/Lift Motor PL. If the problem continues, replace the following in sequence:

- Tray Module PWB (PL 10.9)
- MD PWB (PL 18.2A -7525/30/35, PL 18.2B -7545/56)
- MCU PWB (PL 18.2A -7525/30/35, PL 18.2B -7545/56)

Check the installation of the Tray 3 Level Sensor () and the operation of the actuator. **The Level Sensor is installed correctly and the actuator works.**

Y N

Reinstall the Tray 3 Level Sensor.

Execute dC330 [073-102], Tray 3 Level Sensor. Manually activate the Tray 3 Level Sensor (). **The display changes.**

Y N

Check the wires between P/J111 on the Tray 3 Level Sensor and P/J548 on the Tray Module PWB for an open or shorted circuit, or a loose or damaged connector. **The wires are OK.**

Y N

Repair as required.

Disconnect P/J548 on the Tray Module PWB. **There is approx. +5VDC from P 548 pin 13 to GND.**

Y N

Replace the Tray Module PWB (PL 10.9).

Reconnect P/J548. Monitor the voltage between P/J548-15 (+) and GND (-) while you activate the actuator of the Tray 3 Level Sensor. **The voltage changes.**

Y N

Replace the Tray 3 Level Sensor ().

Replace the following in sequence:

- Tray Module PWB (PL 10.9)
- MD PWB (PL 18.2A -7525/30/35, PL 18.2B -7545/56)
- MCU PWB (PL 18.2A -7525/30/35, PL 18.2B -7545/56)

Check the mechanical components of the lift mechanism for dirty or damaged gears, broken or out-of-place cables. If a problem is found replace the Tray 3 Assembly (PL 11.1). If the check is good, replace the following in sequence:

- Tray Module PWB (PL 10.9)
- MD PWB (PL 18.2A -7525/30/35, PL 18.2B -7545/56)
- MCU PWB (PL 18.2A -7525/30/35, PL 18.2B -7545/56)

378-211 Tray 4 (TTM) Lift Failure RAP

BSD-ON:BSD 7.15 Tray 3 Paper Size Stacking (TTM)

BSD-ON:BSD 1.9 Option DC Power Distribution

After the Tray 4 Lift/Feed Motor turned on, the Tray 4 Level Sensor did not turn on within the specified time.

Initial Actions

- Reload paper in the tray correctly.
- Remove foreign substances in the tray.
- Power OFF/ON

Procedure

Execute dC330 [074-004] Tray 4 Lift/Feed Motor On. **The Tray 4 Lift/Feed Motor can be heard.**

Y N

There is +24 VDC from - P/J541 pin 10 on the Tray Module PWB to GND

Y N

Refer to BSD 1.9 Option DC Power Distribution and the +24VDC-4 Wirenet to troubleshoot the 24 VDC circuit.

Turn OFF the power. Remove the Tray 4 Lift/Feed Motor, then measure the following resistances.

- Between P/J223 pin-1 and P/J223 pin-2
- Between P/J223 pin-3 and P/J223 pin-4

All resistances are approx. 4 Ohms at 25 degrees C / 77 degrees F

Y N

Replace the Tray 4 Lift/Feed Motor ().

Check the wires between P/J223 on the Tray 4 Lift/Feed Motor and P/J550 on the Tray Module PWB for an open or shorted circuit, or a loose or damaged connector. **The wires are OK.**

Y N

Repair as required.

Replace the Tray 4 Feed/Lift Motor PL. If the problem continues, replace the following in sequence:

- Tray Module PWB (PL 11.7)
- MD PWB (PL 18.2A -7525/30/35, PL 18.2B -7545/56)
- MCU PWB (PL 18.2A -7525/30/35, PL 18.2B -7545/56)

Check the installation of the Tray 4 Level Sensor () and the operation of the actuator. **The Level Sensor is installed correctly and the actuator works.**

Y N

Reinstall the Tray 4 Level Sensor.

Execute dC330 [074-102], Tray 4 Level Sensor. Manually activate the Tray 4 Level Sensor (). **The display changes.**

Y N

Check the wires between P/J115 on the Tray 4 Level Sensor and P/J548 on the Tray Module PWB for an open or shorted circuit, or a loose or damaged connector. **The wires are OK.**

Y N

Repair as required.

Disconnect P/J548 on the Tray Module PWB. **There is approx. +5VDC from P 548 pin 4 to GND.**

Y N

Replace the Tray Module PWB (PL 11.7).

Reconnect P/J548. Monitor the voltage between P/J548-6 (+) and GND (-) while you activate the actuator of the Tray 4 Level Sensor. **The voltage changes.**

Y N

Replace the Tray 4 Level Sensor (PL 11.11).

Replace the following in sequence:

- Tray Module PWB (PL 11.7)
- MD PWB (PL 18.2A -7525/30/35, PL 18.2B -7545/56)
- MCU PWB (PL 18.2A -7525/30/35, PL 18.2B -7545/56)

Check the mechanical components of the lift mechanism for dirty or damaged gears, broken or out-of-place cables. If a problem is found replace the Tray 4 Assembly (PL 11.1). If the check is good, replace the following in sequence:

- Tray Module PWB (PL 11.7)
- MD PWB (PL 18.2A -7525/30/35, PL 18.2B -7545/56)
- MCU PWB (PL 18.2A -7525/30/35, PL 18.2B -7545/56)

378-213 Finisher Type Mismatch

BSD-ON:BSD 3.6 PWB Communication (6 of 7)

System detected incorrect finisher type.

NOTE: *When turning the power OFF, turn OFF the Power Switch first and then the Main Power Switch.*

Cause/Action

1. Power down the machine.

   NOTE: *The Integrated Finisher is only applicable to the 7525/30/35 machines. If an Integrated Finisher is installed on a 7545/56 machine, perform the following:*

   a. Disconnect the Finisher

   b. Power up the machine

   c. Go to dC131 and set NVM location 742-869 to 0.

   d. Exit diagnostics

2. Turn the power OFF and connect a Finisher that is supported by this machine.

   a. Power up the machine

   b. Verify the fault has cleared

378-216 Logic Failure RAP

Cannot read from and/or write to the NVM in HCF Module.

Initial Actions

Power OFF/ON

Procedure

Check wires and connectors between the HCF and the IOT.

Reload Software. If the problem continues, replace the HCF PWB (PL 28.8).

378-250 HCF Lift Fault RAP

BSD-ON:BSD 1.12 DC Power Distribution (HCF)

BSD-ON:BSD 1.9 Option DC Power Distribution

HCF Tray Lift failure. The Tray 6 Level Sensor does not turn ON within the specified time after the trays were inserted.

Initial Actions

- Clear any jam and switch the power off then on.
- Check the size of the paper in the tray.
- Remove any debris or foreign substances in the tray.

Procedure

Execute dC330 [073-004] Tray 6 Lift/Feed Motor On. **The Tray 6 Lift/Feed Motor can be heard.**

Y N

There is +24 VDC from PF/JF06 pin 4 on the HCF PWB to GND

Y N

Refer to BSD 1.12 and the HCF +24VDC Wirenet to troubleshoot the 24 VDC circuit.

Turn OFF the power. Disconnect the Tray 6 Lift/Feed Motor, then measure the following resistances.

- Between PF/JF58 pin-2 and PF/JF58 pins 2, 3
- Between PF/JF58 pin 5 and PF/JF58 pins 4, 6

All resistances are approx. 4 Ohms at 25 degrees C / 77 degrees F

Y N

Replace the Tray 6 Lift/Feed Motor (PL 28.4).

Check the wires between PF/JF58 on the Tray 6 Lift/Feed Motor and PF/JF06 on the HCF PWB for an open or shorted circuit, or a loose or damaged connector. **The wires are OK.**

Y N

Repair as required.

Replace the Tray 6 Feed/Lift Motor (PL 28.4). If the problem continues, replace the following in sequence:

- HCF PWB (PL 28.8)
- MD PWB (PL 18.2A -7525/30/35, PL 18.2B -7545/56)
- MCU PWB (PL 18.2A -7525/30/35, PL 18.2B -7545/56)

Check the installation of the Tray 6 Stack Height Sensor (PL 28.5) and the operation of the actuator. **The Level Sensor is installed correctly and the actuator works.**

Y N

Reinstall the Tray 6 Stack Height Sensor.

Execute dC330 [078-201], Tray 6 Stack Height Sensor. Manually activate the Tray 6 Stack Height Sensor. **The display changes.**

Y N

Check the wires between PF/JF62 on the Tray 6 Stack Height Sensor and PF/JF02 on the HCF PWB for an open or shorted circuit, or a loose or damaged connector. **The wires are OK.**

Y N

Repair as required.

There is approx. +5VDC from PF/JF02 pin 3 to GND.

Y N

Replace the HCF PWB (PL 28.8).

Monitor the voltage between PF/JF02-2 (+) and GND (-) while you activate the actuator of the Tray 6 Stack Height Sensor. **The voltage changes.**

Y N

Replace the Tray 6 Stack Height Sensor (PL 28.5).

Replace the following in sequence:

- HCF PWB (PL 28.8)
- MD PWB (PL 18.2A -7525/30/35, PL 18.2B -7545/56)
- MCU PWB (PL 18.2A -7525/30/35, PL 18.2B -7545/56)

Check the mechanical components (PL 28.4) of the lift mechanism for dirty or damaged gears, broken or out-of-place cables. If the check is good, replace the following in sequence:

- HCF PWB (PL 28.8)
- MD PWB (PL 18.2A -7525/30/35, PL 18.2B -7545/56)
- MCU PWB (PL 18.2A -7525/30/35, PL 18.2B -7545/56)

378-300 HCF Top Cover Interlock Open RAP

BSD-ON:BSD 1.12 DC Power Distribution (HCF)

BSD-ON:BSD 1.9 Option DC Power Distribution

The HCF Top Cover Interlock is open.

Procedure

Execute dC330 [078-300 HCF Top Cover Interlock]. Open and close the Top Cover. **The display changes.**

Y N

+24VDC is measured between PF/JF05-2 on the HCF PWB and GND.

Y N

+24VDC is measured between PF/JF05-1 on the HCF PWB and GND.

Y N

+24VDC is measured from J593 pins 3 and 1 on the MD PWB to GND.

Y N

Use BSD 1.7 DC Power Generation (4 of 4) and the HCF +24VDC Wirenet to troubleshoot the 24 VDC circuit.

Replace the HCF PWB (PL 28.8).

Check the wires between PF/JF05-1 on the HCF PWB and FS001 on the HCF Top Cover Interlock Switch, and between FS002 on the HCF Top Cover Interlock Switch and PF/JF05-2 on the HCF PWB for an open wire or poor contact. If the wires are good, replace the HCF Top Cover Interlock Switch (PL 28.7).

Replace the HCF PWB (PL 28.8).

The problem could be misalignment between the HCF Top Cover and the HCF Top Cover Interlock Switch. Check if the Switch/Cover is improperly installed and if the actuator is broken or bent.

If the check is good, replace the following in sequence:

- HCF PWB (PL 28.8)
- MD PWB (PL 18.2A -7525/30/35, PL 18.2B -7545/56)
- MCU PWB (PL 18.2A -7525/30/35, PL 18.2B -7545/56)

378-301 HCF Docking interlock Open RAP

BSD-ON:BSD 1.12 DC Power Distribution (HCF)

HCF Docking Interlock Open. The HCF and the IOT were undocked.

Initial Actions

- Check that the HCF and the IOT are docked properly.
- Switch the power OFF then ON.

Procedure

Execute dC330 [078-301], HCF Docking Interlock. Dock and Undock the HCF. **The display changes.**

Y N

Undock the HCF. Press the HCF Docking Interlock several times. **The display changes.**

Y N

The voltage between PF/JF08-2 on the HCF PWB and GND drops to less that 1 VDC when the Docking Interlock is pressed.

Y N

Check the wires between PF/JF08-1 on the HCF PWB and FS003 on the HCF Docking Interlock, and between FS004 on the HCF Docking Interlock and PF/JF08-2 on the HCF PWB for an open wire or poor contact. If the wires are good, replace the HCF Docking Interlock Switch (PL 28.8).

Replace the HCF PWB (PL 28.8).

The problem could be misalignment between the HCF Docking Base and the IOT. Refer to REP 19.3.

The problem may be intermittent. Check BSD 1.12 DC Power Distribution (HCF) for loose or damaged wiring.

378-500 Download Error RAP

An error has occurred during the process of writing data to the HCF-ROM.

Procedure

Retry job. If retry failed, replace the HCF PWB (PL 28.8).

378-901 HCF Feed Out Sensor Static Jam RAP

BSD-ON:BSD 8.8 HCF Paper Transportation

The Tray 6 Feed Out Sensor static jam.

Initial Actions

- Clear any jam and switch the power off then on.
- Check for out-of-spec paper.
- Paper Path for a foreign object/burr/piece of paper

Procedure

Execute dC330 [078-101], Tray 6 Feed out Sensor. Block and unblock the Feed Out Sensor. **The display changes.**

Y N

Go to BSD and check the following for an open wire, short or poor contact:

- Feed Out Sensor PF/JF67-2 to HCF PWB PF/JF01-2
- Feed Out Sensor PF/JF67-1 to HCF PWB PF/JF01-3
- Feed Out Sensor PF/JF67-3 to HCF PWB PF/JF01-1

If OK, replace the Feed Out Sensor (PL 28.7) before replacing the HCF PWB (PL 28.8).

Execute dC330 [078-007], Tray 6 Takeaway Motor. **There is operation noise from the Take-away Motor.**

Y N

Check the circuit between PF/JF57 on the Tray 6 Takeaway Motor and PF/JF06 on the HCF PWB for an open or a short circuit, or a loose or damaged connector. **The wires are OK.**

Y N

Repair as required.

Check that the resistance through Tray 6 Takeaway Motor is approx. 0.8 ohms (25 degrees C / 77 degrees F) at the measurement points below.

- PF/JF57-3 to pins 1/2
- PF/JF57-4 to pins 5/6

The resistances are OK

Y N

Replace the Tray 6 Takeaway Motor (PL 28.8).

There is +24VDC from PF/JF06 pins 9 and 10, to GND.

Y N

Go to HCF +24VDC Wirenet and troubleshoot the +24VDC circuit.

Replace the Tray 6 Takeaway Motor (PL 28.8). If the problem persists, replace the HCF PWB (PL 28.8).

Open and close Tray 6. **The Tray 6 Lift/Feed Motor operates**

Y N

Check the circuit between PF/JF57 on the Tray 6 Lift/Feed Motor and PF/JF06 on the HCF PWB for an open or a short circuit, or a loose or damaged connector. **The wires are OK.**

A

A

Y N

Repair as required.

Check that the resistance through Tray 6 Takeaway Motor is approx. 0.8 ohms at the measurement points below.

- PF/JF57-3 to pins 1/2
- PF/JF57-4 to pins 5/6

The resistances are OK

Y N

Replace the Tray 6 Takeaway Motor (PL 28.8).

There is +24VDC from PF/JF06 pins 9 and 10, to GND.

Y N

Go to HCF +24VDC Wirenet and troubleshoot the +24VDC circuit.

Replace the Tray 6 Takeaway Motor (PL 28.8). If the problem persists, replace the HCF PWB (PL 28.8).

Check the HCF paper lift components and repair as required (PL 28.3).

378-945 TTM Tray 3 Lift RAP

There is a problem with the TTM Tray 3 Lift.

Procedure

Go to the 378-210 RAP.

378-946 TTM Tray 4 Lift RAP

There is a problem with the TTM Tray 4 Lift.

Procedure

Go to the 378-211 RAP.

389-600 RC Sample Lateral Fail-A1

BSD-ON:BSD 6.12 Color Registration Control

There is an error with the Cyan fast scan position that is used as a reference during A1 (fine adjustment pattern) and C patch detection. (This is a hidden failure. The Color Regi Spec cannot be guaranteed and Data is only recorded in history.)

NOTE: *When turning the power OFF, turn OFF the Power Switch first and then the Main Power Switch.*

Initial Actions

When multiple failures with Chain No. 389 occur, take action according to the priority order in the following table. Solving a higher priority failure may sometimes also repair the other failures. (Chain No. 389 Fail is detected during the execution of Regi Control. However, 389-617 is also detected during power ON.)

Table 1 Chain No. 389

Priority	Chain Link	Fail Item
1 (High)	389-616	RC Data Over Flow Fail
2	389-604, 389-606, 389-607, 389-609, 389-610, 389-612, 389-613, 389-615,	RC SampleBlock Fail-B
3	389-601, 389-603	RC SampleBlock Fail-A1
4	389-600	RC SampleLateral Fail-A1
5	389-617	RC Lead Regi Over Range Fail
6 (Low)	389-625, 389-626, 389-627, 389-628	RC Data Linearity Fail

Procedure

Check the installation status of the IBT Assembly. **Is the IBT Assembly installed properly?**

Y **N**

Install the IBT Assembly properly.

Replace the IBT Assembly(PL 6.1)

389-601 RC Sample Block Fail-A1-In

BSD-ON:BSD 6.12 Color Registration Control

During the A1 (fine adjustment pattern) and C patch detection, the patch at the MOB Sensor In side did not satisfy the defined number of valid sample blocks. (This is a hidden failure. The Color Regi Spec cannot be guaranteed and Data is only recorded in history.)

NOTE: *•When this Fail occurs, select No. 003 in DC612 Test Pattern Print and check the print-out of the fine adjustment pattern to estimate the color position (In/Out). Before printing this test pattern, set the value of DC131 [870-207] to "7".*

- *When turning the power OFF, turn OFF the Power Switch first and then the Main Power Switch.*

Initial Actions

When multiple failures with Chain No. 389 occur, take action according to the priority order in the following table. Solving a higher priority failure may sometimes also repair the other failures. (Chain No. 389 Fail is detected during the execution of Regi Control. However, 389-617 is also detected during power ON.)

Table 1 Chain No. 389

Priority	Chain Link	Fail Item
1 (High)	389-616	RC Data Over Flow Fail
2	389-604, 389-606, 389-607, 389-609, 389-610, 389-612, 389-613, 389-615,	RC SampleBlock Fail-B
3	389-601, 389-603	RC SampleBlock Fail-A1
4	389-600	RC SampleLateral Fail-A1
5	389-617	RC Lead Regi Over Range Fail
6 (Low)	389-625, 389-626, 389-627, 389-628	RC Data Linearity Fail

Cause/Action

1. Check the detection section of the MOB Sensor for contamination, the connectors for disconnection, and the connections for open circuit, short circuit, and poor contact. If no problems are found, replace the MOB ADC Assembly (PL 18.5).
2. Perform DC675 Regi Control Setup Cycle.

389-603 RC Sample Block Fail-A1-Out

BSD-ON:BSD 6.12 Color Registration Control

During the A1 (fine adjustment pattern) and C patch detection, the patch at the MOB Sensor Out side did not satisfy the defined number of valid sample blocks. (This is a hidden failure. The Color Regi Spec cannot be guaranteed and Data is only recorded in history.)

NOTE: *•When this Fail occurs, select No. 003 in DC612 Test Pattern Print and check the print-out of the fine adjustment pattern to estimate the color position (In/Out). Before printing this test pattern, set the value of DC131 [870-207] to "7".*

- *When turning the power OFF, turn OFF the Power Switch first and then the Main Power Switch.*

Initial Actions

When multiple failures with Chain No. 389 occur, take action according to the priority order in the following table. Solving a higher priority failure may sometimes also repair the other failures. (Chain No. 389 Fail is detected during the execution of Regi Control. However, 389-617 is also detected during power ON.)

Table 1 Chain No. 389

Priority	Chain Link	Fail Item
1 (High)	389-616	RC Data Over Flow Fail
2	389-604, 389-606, 389-607, 389-609, 389-610, 389-612, 389-613, 389-615,	RC SampleBlock Fail-B
3	389-601, 389-603	RC SampleBlock Fail-A1
4	389-600	RC SampleLateral Fail-A1
5	389-617	RC Lead Regi Over Range Fail
6 (Low)	389-625, 389-626, 389-627, 389-628	RC Data Linearity Fail

Cause/Action

1. Check the detection section of the MOB Sensor for contamination, the connectors for disconnection, and the connections for open circuit, short circuit, and poor contact. If no problems are found, replace the MOB ADC Assembly (PL 18.5).
2. Perform DC675 Regi Control Setup Cycle.

389-604 RC Sample Block Fail-B-#1-In

BSD-ON:BSD 6.12 Color Registration Control

During the B (rough adjustment pattern) patch detection, the #1 (Yellow) patch at the MOB Sensor In side did not satisfy the defined number of valid sample blocks. (This is a hidden failure. The Color Regi Spec cannot be guaranteed and Data is only recorded in history.)

NOTE: *•When this Fail occurs, select No. 004 in DC612 Test Pattern Print and check the print-out of the rough adjustment pattern to estimate the color position (In/Out). Before printing this test pattern, set the value of DC131 [870-207] to "7".*

- *When turning the power OFF, turn OFF the Power Switch first and then the Main Power Switch.*

Initial Actions

When multiple failures with Chain No. 389 occur, take action according to the priority order in the following table. Solving a higher priority failure may sometimes also repair the other failures. (Chain No. 389 Fail is detected during the execution of Regi Control. However, 389-617 is also detected during power ON.)

Table 1 Chain No. 389

Priority	Chain Link	Fail Item
1 (High)	389-616	RC Data Over Flow Fail
2	389-604, 389-606, 389-607, 389-609, 389-610, 389-612, 389-613, 389-615,	RC SampleBlock Fail-B
3	389-601, 389-603	RC SampleBlock Fail-A1
4	389-600	RC SampleLateral Fail-A1
5	389-617	RC Lead Regi Over Range Fail
6 (Low)	389-625, 389-626, 389-627, 389-628	RC Data Linearity Fail

Procedure

Check the density of Y color. **Is the density of Y color normal?**

Y **N**

Adjust to correct the density of Y color.

Check the connection between the MOB Sensor In J150 and the MCU PWB J415 for connector disconnection, open circuit, short circuit, and poor contact. **Is the connection normal?**

Y **N**

Connect the MOB Sensor In J150 to the MCU PWB J415 properly.

Check the Y Magnet Roll for contamination, scratches, and distortion. **Is the Magnet Roll normal?**

Y **N**

Replace the Developer (Y)(PL 5.2)

A

A

Check the Transfer Belt for contamination, scratches, and distortion. **Is the Transfer Belt normal?**

Y **N**

Replace the IBT Assembly(PL 6.1)

Check the Y Drum for contamination, scratches, and distortion. **Is the Drum normal?**

Y **N**

Replace Drum (Y) (PL 8.1)

Replace the MOB ADC Assembly (PL 18.5) and perform DC675 Registration Control Setup Cycle. If the problem persists, replace the MCU PWB.

- MCU PWB (7525/30/35) (PL 18.2A)
- MCU PWB (7545/56) (PL 18.2B)

389-606 RC Sample Block Fail-B-#1-Out

BSD-ON:BSD 6.12 Color Registration Control

During the B (rough adjustment pattern) patch detection, the #1 (Yellow) patch at the MOB Sensor Out side did not satisfy the defined number of valid sample blocks. (This is a hidden failure. The Color Regi Spec cannot be guaranteed and Data is only recorded in history.)

NOTE: *•When this Fail occurs, select No. 004 in DC612 Test Pattern Print and check the print-out of the rough adjustment pattern to estimate the color position (In/Out). Before printing this test pattern, set the value of DC131 [870-207] to "7".*

- *When turning the power OFF, turn OFF the Power Switch first and then the Main Power Switch.*

Initial Actions

When multiple failures with Chain No. 389 occur, take action according to the priority order in the following table. Solving a higher priority failure may sometimes also repair the other failures. (Chain No. 389 Fail is detected during the execution of Regi Control. However, 389-617 is also detected during power ON.)

Table 1 Chain No. 389

Priority	Chain Link	Fail Item
1 (High)	389-616	RC Data Over Flow Fail
2	389-604, 389-606, 389-607, 389-609, 389-610, 389-612, 389-613, 389-615,	RC SampleBlock Fail-B
3	389-601, 389-603	RC SampleBlock Fail-A1
4	389-600	RC SampleLateral Fail-A1
5	389-617	RC Lead Regi Over Range Fail
6 (Low)	389-625, 389-626, 389-627, 389-628	RC Data Linearity Fail

Procedure

Check the density of Y color. **Is the density of Y color normal?**

Y **N**

Adjust to correct the density of Y color.

Check the connection between the MOB Sensor Out J151 and the MCU PWB J415 for connector disconnection, open circuit, short circuit, and poor contact. **Is the connection normal?**

Y **N**

Connect the MOB Sensor Out J151 to the MCU PWB J415 properly.

Check the Y Magnet Roll for contamination, scratches, and distortion. **Is the Magnet Roll normal?**

Y **N**

Replace the Developer (Y)(PL 5.2)

A

A

Check the Transfer Belt for contamination, scratches, and distortion. **Is the Transfer Belt normal?**

Y **N**

Replace the IBT Assembly(PL 6.1)

Check the Y Drum for contamination, scratches, and distortion. **Is the Drum normal?**

Y **N**

Replace Drum (Y) (PL 8.1)

Replace the MOB ADC Assembly (PL 18.5) and perform DC675 Registration Control Setup Cycle. If the problem persists, replace the MCU PWB.

- MCU PWB (7525/30/35) (PL 18.2A)
- MCU PWB (7545/56) (PL 18.2B)

389-607 RC Sample Block Fail-B-#2-In

BSD-ON:BSD 6.12 Color Registration Control

During the B (rough adjustment pattern) patch detection, the #2 (Magenta) patch at the MOB Sensor In side did not satisfy the defined number of valid sample blocks. (This is a hidden failure. The Color Regi Spec cannot be guaranteed and Data is only recorded in history.)

NOTE: *•When this Fail occurs, select No. 004 in DC612 Test Pattern Print and check the printout of the rough adjustment pattern to estimate the color position (In/Out). Before printing this test pattern, set the value of DC131 [870-207] to "7".*

- *When turning the power OFF, turn OFF the Power Switch first and then the Main Power Switch.*

Initial Actions

When multiple failures with Chain No. 389 occur, take action according to the priority order in the following table. Solving a higher priority failure may sometimes also repair the other failures. (Chain No. 389 Fail is detected during the execution of Regi Control. However, 389-617 is also detected during power ON.)

Table 1 Chain No. 389

Priority	Chain Link	Fail Item
1 (High)	389-616	RC Data Over Flow Fail
2	389-604, 389-606, 389-607, 389-609, 389-610, 389-612, 389-613, 389-615,	RC SampleBlock Fail-B
3	389-601, 389-603	RC SampleBlock Fail-A1
4	389-600	RC SampleLateral Fail-A1
5	389-617	RC Lead Regi Over Range Fail
6 (Low)	389-625, 389-626, 389-627, 389-628	RC Data Linearity Fail

Procedure

Check the density of M color. **Is the density of M color normal?**

Y **N**

Adjust to correct the density of M color.

Check the connection between the MOB Sensor In J150 and the MCU PWB J415 for connector disconnection, open circuit, short circuit, and poor contact. **Is the connection normal?**

Y **N**

Connect the MOB Sensor In J150 to the MCU PWB J415 properly.

Check the M Magnet Roll for contamination, scratches, and distortion. **Is the Magnet Roll normal?**

Y **N**

Replace the Developer (M)(PL 5.2)

A

A

Check the Transfer Belt for contamination, scratches, and distortion. **Is the Transfer Belt normal?**

Y **N**

Replace the IBT Assembly(PL 6.1)

Check the M Drum for contamination, scratches, and distortion. **Is the Drum normal?**

Y **N**

Replace Drum (M) (PL 8.1)

Replace the MOB ADC Assembly (PL 18.5) and perform DC675 Registration Control Setup Cycle. If the problem persists, replace the MCU PWB.

- MCU PWB (7525/30/35) (PL 18.2A)
- MCU PWB (7545/56) (PL 18.2B)

389-609 RC Sample Block Fail-B-#2-Out

BSD-ON:BSD 6.12 Color Registration Control

During the B (rough adjustment pattern) patch detection, the #2 (Magenta) patch at the MOB Sensor Out side did not satisfy the defined number of valid sample blocks. (This is a hidden failure. The Color Regi Spec cannot be guaranteed and Data is only recorded in history.)

NOTE: *•When this Fail occurs, select No. 004 in DC612 Test Pattern Print and check the print-out of the rough adjustment pattern to estimate the color position (In/Out). Before printing this test pattern, set the value of DC131 [870-207] to "7".*

- *When turning the power OFF, turn OFF the Power Switch first and then the Main Power Switch.*

Initial Actions

When multiple failures with Chain No. 389 occur, take action according to the priority order in the following table. Solving a higher priority failure may sometimes also repair the other failures. (Chain No. 389 Fail is detected during the execution of Regi Control. However, 389-617 is also detected during power ON.)

Table 1 Chain No. 389

Priority	Chain Link	Fail Item
1 (High)	389-616	RC Data Over Flow Fail
2	389-604, 389-606, 389-607, 389-609, 389-610, 389-612, 389-613, 389-615,	RC SampleBlock Fail-B
3	389-601, 389-603	RC SampleBlock Fail-A1
4	389-600	RC SampleLateral Fail-A1
5	389-617	RC Lead Regi Over Range Fail
6 (Low)	389-625, 389-626, 389-627, 389-628	RC Data Linearity Fail

Procedure

Check the density of M color. **Is the density of M color normal?**

Y **N**

Adjust to correct the density of M color.

Check the connection between the MOB Sensor In J151 and the MCU PWB J415 for connector disconnection, open circuit, short circuit, and poor contact. **Is the connection normal?**

Y **N**

Connect the MOB Sensor Out J151 to the MCU PWB J415 properly.

Check the M Magnet Roll for contamination, scratches, and distortion. **Is the Magnet Roll normal?**

Y **N**

Replace the Developer (M)(PL 5.2)

Check the Transfer Belt for contamination, scratches, and distortion. **Is the Transfer Belt normal?**

Y N

Replace the IBT Assembly(PL 6.1)

Check the M Drum for contamination, scratches, and distortion. **Is the Drum normal?**

Y N

Replace Drum (M) (PL 8.1)

Replace the MOB ADC Assembly (PL 18.5) and perform DC675 Registration Control Setup Cycle. If the problem persists, replace the MCU PWB.

- MCU PWB (7525/30/35) (PL 18.2A)
- MCU PWB (7545/56) (PL 18.2B)

389-610 RC Sample Block Fail-B-#3-In

BSD-ON:BSD 6.12 Color Registration Control

During the B (rough adjustment pattern) patch detection, the #3 (Cyan) patch at the MOB Sensor In side did not satisfy the defined number of valid sample blocks. (This is a hidden failure. The Color Regi Spec cannot be guaranteed and Data is only recorded in history.)

NOTE: *•When this Fail occurs, select No. 004 in DC612 Test Pattern Print and check the print-out of the rough adjustment pattern to estimate the color position (In/Out). Before printing this test pattern, set the value of DC131 [870-207] to "7".*

- *When turning the power OFF, turn OFF the Power Switch first and then the Main Power Switch.*

Initial Actions

When multiple failures with Chain No. 389 occur, take action according to the priority order in the following table. Solving a higher priority failure may sometimes also repair the other failures. (Chain No. 389 Fail is detected during the execution of Regi Control. However, 389-617 is also detected during power ON.)

Table 1 Chain No. 389

Priority	Chain Link	Fail Item
1 (High)	389-616	RC Data Over Flow Fail
2	389-604, 389-606, 389-607, 389-609, 389-610, 389-612, 389-613, 389-615,	RC SampleBlock Fail-B
3	389-601, 389-603	RC SampleBlock Fail-A1
4	389-600	RC SampleLateral Fail-A1
5	389-617	RC Lead Regi Over Range Fail
6 (Low)	389-625, 389-626, 389-627, 389-628	RC Data Linearity Fail

Procedure

Check the density of C color. **Is the density of C color normal?**

Y N

Adjust to correct the density of C color.

Check the connection between the MOB Sensor In J150 and the MCU PWB J415 for connector disconnection, open circuit, short circuit, and poor contact. **Is the connection normal?**

Y N

Connect the MOB Sensor In J150 to the MCU PWB J415 properly.

Check the C Magnet Roll for contamination, scratches, and distortion. **Is the Magnet Roll normal?**

Y N

Replace the Developer (C)(PL 5.2)

Check the Transfer Belt for contamination, scratches, and distortion. **Is the Transfer Belt normal?**

Y N

Replace the IBT Assembly(PL 6.1)

A

A

Check the C Drum for contamination, scratches, and distortion. **Is the Drum normal?**

Y **N**

Replace Drum (C). (PL 8.1)

Replace the MOB ADC Assembly (PL 18.5) and perform DC675 Registration Control Setup Cycle. If the problem persists, replace the MCU PWB.

- MCU PWB (7525/30/35) (PL 18.2A)
- MCU PWB (7545/56) (PL 18.2B)

389-612 RC Sample Block Fail-B-#3-Out

BSD-ON:BSD 6.12 Color Registration Control

During the B (rough adjustment pattern) patch detection, the #3 (Cyan) patch at the MOB Sensor Out side did not satisfy the defined number of valid sample blocks. (This is a hidden failure. The Color Regi Spec cannot be guaranteed and Data is only recorded in history.)

NOTE: *•When this Fail occurs, select No. 004 in DC612 Test Pattern Print and check the print-out of the rough adjustment pattern to estimate the color position (In/Out). Before printing this test pattern, set the value of DC131 [870-207] to "7".*

- *When turning the power OFF, turn OFF the Power Switch first and then the Main Power Switch.*

Initial Actions

When multiple failures with Chain No. 389 occur, take action according to the priority order in the following table. Solving a higher priority failure may sometimes also repair the other failures. (Chain No. 389 Fail is detected during the execution of Regi Control. However, 389-617 is also detected during power ON.)

Table 1 Chain No. 389

Priority	Chain Link	Fail Item
1 (High)	389-616	RC Data Over Flow Fail
2	389-604, 389-606, 389-607, 389-609, 389-610, 389-612, 389-613, 389-615,	RC SampleBlock Fail-B
3	389-601, 389-603	RC SampleBlock Fail-A1
4	389-600	RC SampleLateral Fail-A1
5	389-617	RC Lead Regi Over Range Fail
6 (Low)	389-625, 389-626, 389-627, 389-628	RC Data Linearity Fail

Procedure

Check the density of C color. **Is the density of C color normal?**

Y **N**

Adjust to correct the density of C color.

Check the connection between the MOB Sensor Out J151 and the MCU PWB J415 for connector disconnection, open circuit, short circuit, and poor contact. **Is the connection normal?**

Y **N**

Connect the MOB Sensor Out J151 to the MCU PWB J415 properly.

Check the C Magnet Roll for contamination, scratches, and distortion. **Is the Magnet Roll normal?**

Y **N**

Replace the Developer (C)(PL 5.2)

Check the Transfer Belt for contamination, scratches, and distortion. **Is the Transfer Belt normal?**

Y **N**

Replace the IBT Assembly(PL 6.1)

A

A

Check the C Drum for contamination, scratches, and distortion. **Is the Drum normal?**

Y **N**

Replace Drum (C). (PL 8.1)

Replace the MOB ADC Assembly (PL 18.5) and perform DC675 Registration Control Setup Cycle. If the problem persists, replace the MCU PWB.

- MCU PWB (7525/30/35) (PL 18.2A)
- MCU PWB (7545/56) (PL 18.2B)

389-613 RC Sample Block Fail-B-#4-In

BSD-ON:BSD 6.12 Color Registration Control

During the B (rough adjustment pattern) patch detection, the #4 (Black) patch at the MOB Sensor In side did not satisfy the defined number of valid sample blocks. (This is a hidden failure. The Color Regi Spec cannot be guaranteed and Data is only recorded in history.)

NOTE: *•When this Fail occurs, select No. 004 in DC612 Test Pattern Print and check the print-out of the rough adjustment pattern to estimate the color position (In/Out). Before printing this test pattern, set the value of DC131 [870-207] to "7".*

- *When turning the power OFF, turn OFF the Power Switch first and then the Main Power Switch.*

Initial Actions

When multiple failures with Chain No. 389 occur, take action according to the priority order in the following table. Solving a higher priority failure may sometimes also repair the other failures. (Chain No. 389 Fail is detected during the execution of Regi Control. However, 389-617 is also detected during power ON.)

Table 1 Chain No. 389

Priority	Chain Link	Fail Item
1 (High)	389-616	RC Data Over Flow Fail
2	389-604, 389-606, 389-607, 389-609, 389-610, 389-612, 389-613, 389-615,	RC SampleBlock Fail-B
3	389-601, 389-603	RC SampleBlock Fail-A1
4	389-600	RC SampleLateral Fail-A1
5	389-617	RC Lead Regi Over Range Fail
6 (Low)	389-625, 389-626, 389-627, 389-628	RC Data Linearity Fail

Procedure

Check the density of K color. **Is the density of K color normal?**

Y **N**

Adjust to correct the density of K color.

Check the connection between the MOB Sensor In J150 and the MCU PWB J415 for connector disconnection, open circuit, short circuit, and poor contact. **Is the connection normal?**

Y **N**

Connect the MOB Sensor In J150 to the MCU PWB J415 properly.

Check the K Magnet Roll for contamination, scratches, and distortion. **Is the Magnet Roll normal?**

Y **N**

Replace the Developer (K)(PL 5.2)

Check the Transfer Belt for contamination, scratches, and distortion. **Is the Transfer Belt normal?**

Y **N**

Replace the IBT Assembly(PL 6.1)

Check the K Drum for contamination, scratches, and distortion. **Is the Drum normal?**

Y **N**

Replace the Drum (K) (PL 8.1)

Replace the MOB ADC Assembly (PL 18.5) and perform DC675 Registration Control Setup Cycle. If the problem persists, replace the MCU PWB.

- MCU PWB (7525/30/35) (PL 18.2A)
- MCU PWB (7545/56) (PL 18.2B)

389-615 RC Sample Block Fail-B-#4-Out

BSD-ON:BSD 6.12 Color Registration Control

During the B (rough adjustment pattern) patch detection, the #4 (Black) patch at the MOB Sensor Out side did not satisfy the defined number of valid sample blocks. (This is a hidden failure. The Color Regi Spec cannot be guaranteed and Data is only recorded in history.)

NOTE: *•When this Fail occurs, select No. 004 in DC612 Test Pattern Print and check the print-out of the rough adjustment pattern to estimate the color position (In/Out). Before printing this test pattern, set the value of DC131 [870-207] to "7".*

- *When turning the power OFF, turn OFF the Power Switch first and then the Main Power Switch.*

Initial Actions

When multiple failures with Chain No. 389 occur, take action according to the priority order in the following table. Solving a higher priority failure may sometimes also repair the other failures. (Chain No. 389 Fail is detected during the execution of Regi Control. However, 389-617 is also detected during power ON.)

Table 1 Chain No. 389

Priority	Chain Link	Fail Item
1 (High)	389-616	RC Data Over Flow Fail
2	389-604, 389-606, 389-607, 389-609, 389-610, 389-612, 389-613, 389-615,	RC SampleBlock Fail-B
3	389-601, 389-603	RC SampleBlock Fail-A1
4	389-600	RC SampleLateral Fail-A1
5	389-617	RC Lead Regi Over Range Fail
6 (Low)	389-625, 389-626, 389-627, 389-628	RC Data Linearity Fail

Procedure

Check the density of K color. **Is the density of K color normal?**

Y **N**

Adjust to correct the density of K color.

Check the connection between the MOB Sensor Out J151 and the MCU PWB J415 for connector disconnection, open circuit, short circuit, and poor contact. **Is the connection normal?**

Y **N**

Connect the MOB Sensor Out J151 to the MCU PWB J415 properly.

Check the K Magnet Roll for contamination, scratches, and distortion. **Is the Magnet Roll normal?**

Y **N**

Replace the Developer (K)(PL 5.2)

Check the Transfer Belt for contamination, scratches, and distortion. **Is the Transfer Belt normal?**

Y **N**

Replace the IBT Assembly(PL 6.1)

A

A

Check the K Drum for contamination, scratches, and distortion. **Is the Drum normal?**

Y **N**

Replace the Drum (K) (PL 8.1)

Replace the MOB ADC Assembly (PL 18.5) and perform DC675 Registration Control Setup Cycle. If the problem persists, replace the MCU PWB.

- MCU PWB (7525/30/35) (PL 18.2A)
- MCU PWB (7545/56) (PL 18.2B)

389-616 RC Data Over Flow Fail

BSD-ON:BSD 6.12 Color Registration Control

The correction setting value of calculation result has exceeded the settable range. (This is a hidden failure. The Color Regi Spec cannot be guaranteed and Data is only recorded in history.)

NOTE: *When turning the power OFF, turn OFF the Power Switch first and then the Main Power Switch.*

Initial Actions

When multiple failures with Chain No. 389 occur, take action according to the priority order in the following table. Solving a higher priority failure may sometimes also repair the other failures. (Chain No. 389 Fail is detected during the execution of Regi Control. However, 389-617 is also detected during power ON.)

Table 1 Chain No. 389

Priority	Chain Link	Fail Item
1 (High)	389-616	RC Data Over Flow Fail
2	389-604, 389-606, 389-607, 389-609, 389-610, 389-612, 389-613, 389-615,	RC SampleBlock Fail-B
3	389-601, 389-603	RC SampleBlock Fail-A1
4	389-600	RC SampleLateral Fail-A1
5	389-617	RC Lead Regi Over Range Fail
6 (Low)	389-625, 389-626, 389-627, 389-628	RC Data Linearity Fail

Procedure

Display the adjustment amount in DC675 Registration Control Setup Cycle. Check which item has reached the maximum adjustment amount shown in the following table.

Table 2 Max Adj.

Correction item	Adjustment Range	
	MIN	MAX
Fast Scan Margin	-90	+90
Slow Scan Margin	-4720	+4720
Skew	-800	+800

Is the item that has reached the adjustment range (MIN or MAX), "Fast Scan Margin" or "Slow Scan Margin"?

Y **N**

Check the following:

- Check that the value of DC131 [760-024] is "0".
- The Drum (Y, M, C, K) for improper installation.

If no problems are found, replace the following parts in sequence:

- Drum (Y, M, C, K) (PL 8.1)
- LPH Unit (Y, M, C, K) (PL 2.1)

A

A

- Rear Holder Assembly (PL 2.1)

Is the item that has reached the adjustment range (MIN or MAX) "Slow Scan Margin"?

Y N

Raise/lower the LPH (Y, M, C, K) 2 to 3 times to check the LPH lift up/down mechanism. If the problem persists, replace the LPH Unit (Y, M, C, K) (PL 2.1).

Replace the MCU PWB and perform DC675 Registration Control Setup Cycle.

- MCU PWB (7525/30/35) (PL 18.2A)
- MCU PWB (7545/56) (PL 18.2B)

389-617 RC Lead Regi Over Range Fail

BSD-ON:Chain 3 BSDs

The result from adding the offset value to the color registration correction value has exceeded the settable range. (This is a hidden failure. The Alignment Lead Regi or Skew might have exceeded the adjustable range and Data is only recorded in history.)

Initial Actions

When multiple failures with Chain No. 389 occur, take action according to the priority order in the following table. Solving a higher priority failure may sometimes also repair the other failures. (Chain No. 389 Fail is detected during the execution of Regi Control. However, 389-617 is also detected during power ON.)

Table 1 Chain No. 389

Priority	Chain Link	Fail Item
1 (High)	389-616	RC Data Over Flow Fail
2	389-604, 389-606, 389-607, 389-609, 389-610, 389-612, 389-613, 389-615,	RC SampleBlock Fail-B
3	389-601, 389-603	RC SampleBlock Fail-A1
4	389-600	RC SampleLateral Fail-A1
5	389-617	RC Lead Regi Over Range Fail
6 (Low)	389-625, 389-626, 389-627, 389-628	RC Data Linearity Fail

Cause/Action

1. Check that the value of DC131 [760-063] is "0". (Because this Fail occurs only when the NVM write data is incorrect or the NVM is corrupted, if the setting value is not "0", reset it to "0".)
2. Check that the value of DC131 [760-082] is between the values of DC131 [760-084] and DC131 [760-085]. (If it is not, set the value of DC131 [760-082] to be between the values of DC131 [760-084] and DC131 [760-085].)
3. Check that the value of DC131 [760-083] is between the values of DC131 [760-084] and DC131 [760-085]. (If it is not, set the value of DC131 [760-083] to be between the values of DC131 [760-084] and DC131 [760-085].)

389-622 RC Data Linearity Fail

BSD-ON:BSD 6.12 Color Registration Control

The result from adding the skew/bow correction value to the linearity correction value has exceeded the settable range. (This is a hidden failure. The LPH Slow Scan linearity cannot be guaranteed and Data is only recorded in history.)

Initial Actions

When multiple failures with Chain No. 089 occur, take action according to the priority order in the following table. Solving a higher priority failure may sometimes also repair the other failures. (Chain No. 089 Fail is detected during the execution of Regi Control. However, 089-617 is also detected during power ON.)

Table 1 Chain 389

Priority	Chain Link	Fail Item
1 (High)	089-616	RC Data Over Flow Fail
2	089-604, 089-606, 089-607, 089-609, 089-610, 089-612, 089-613, 089-615,	RC SampleBlock Fail-B
3	089-601, 089-603	RC SampleBlock Fail-A1
4	089-600	RC SampleLateral Fail-A1
5	089-617	RC Data Over Range Fail
6	089-622	RC Data Linearity Fail
7 (Low)	089-624	PS Zphase Sensor Fail

Procedure

Check that the value stored in LPH EEPROM is correct. **Has any Chain No. 061 Fail occurred?**

Y N

Display the skew correction amount in DC675 Regi Control Setup Cycle. **Is the "skew correction amount" within the range of +500~-500?**

Y N

Check the following:

- The value of DC131[760-111] is "0".
- The Drum (Y, M, C, K) for improper installation.

If no problems are found, replace the following parts in sequence:

- Drum (Y, M, C, K) (PL 8.1)
- LPH Unit (Y, M, C, K) (PL 2.1)
- Rear Holder Assembly (PL 2.1)

Replace the LPH Unit (Y, M, C, K) (PL 2.1) and perform DC675 Regi Control Setup Cycle. If the problem persists, replace the MCU PWB.

- MCU PWB (7525/30/35) (PL 18.2A)
- MCU PWB (7545/56) (PL 18.2B)

Go to the appropriate RAP

389-625 RC Data Linearity Fail Y

BSD-ON:BSD 6.12 Color Registration Control

The result from adding the skew/bow correction value to the Y color linearity correction value has exceeded the settable range. (This is a hidden failure. The LPH Slow Scan linearity cannot be guaranteed and Data is only recorded in history.)

Initial Actions

When multiple failures with Chain No. 389 occur, take action according to the priority order in the following table. Solving a higher priority failure may sometimes also repair the other failures. (Chain No. 389 Fail is detected during the execution of Regi Control. However, 389-617 is also detected during power ON.)

Table 1 Chain No. 389

Priority	Chain Link	Fail Item
1 (High)	389-616	RC Data Over Flow Fail
2	389-604, 389-606, 389-607, 389-609, 389-610, 389-612, 389-613, 389-615,	RC SampleBlock Fail-B
3	389-601, 389-603	RC SampleBlock Fail-A1
4	389-600	RC SampleLateral Fail-A1
5	389-617	RC Lead Regi Over Range Fail
6 (Low)	389-625, 389-626, 389-627, 389-628	RC Data Linearity Fail

Procedure

Check that the value stored in LPH (Y) EEPROM is correct. **Has any Y color related Chain No. 061 Fail occurred?**

Y N

Display the skew correction amount in DC675 Regi Control Setup Cycle.

Is the "skew correction amount" within the range of +500~-500?

Y N

Check the following:

- Check that the value of DC131 [760-024] is "0".
- The Drum (Y) for improper installation.

If no problems are found, replace the following parts in sequence:

- Drum (Y) (PL 8.1)
- LPH Unit (Y) (PL 2.1)
- Rear Holder Assembly (Y) (PL 2.1)

Replace the LPH Unit (Y) (PL 2.1) and perform DC675 Registration Control Setup Cycle. If the problem persists, replace the MCU PWB.

- MCU PWB (7525/30/35) (PL 18.2A)
- MCU PWB (7545/56) (PL 18.2B)

Go to the appropriate RAP

389-626 RC Data Linearity Fail M

BSD-ON:BSD 6.12 Color Registration Control

The result from adding the skew/bow correction value to the M color linearity correction value has exceeded the settable range. (This is a hidden failure. The LPH Slow Scan linearity cannot be guaranteed and Data is only recorded in history.)

Initial Actions

When multiple failures with Chain No. 389 occur, take action according to the priority order in the following table. Solving a higher priority failure may sometimes also repair the other failures. (Chain No. 389 Fail is detected during the execution of Regi Control. However, 389-617 is also detected during power ON.)

Table 1 Chain No. 389

Priority	Chain Link	Fail Item
1 (High)	389-616	RC Data Over Flow Fail
2	389-604, 389-606, 389-607, 389-609, 389-610, 389-612, 389-613, 389-615,	RC SampleBlock Fail-B
3	389-601, 389-603	RC SampleBlock Fail-A1
4	389-600	RC SampleLateral Fail-A1
5	389-617	RC Lead Regi Over Range Fail
6 (Low)	389-625, 389-626, 389-627, 389-628	RC Data Linearity Fail

Procedure

Check that the value stored in LPH (M) EEPROM is correct. **Has any M color related Chain No. 061 Fail occurred?**

Y N

Display the skew correction amount in DC675 Regi Control Setup Cycle.
Is the "skew correction amount" within the range of +500~-500?

Y N

Check the following:

- Check that the value of DC131 [760-024] is "0".
- The Drum (M) for improper installation.

If no problems are found, replace the following parts in sequence:

- Drum (M) (PL 8.1)
- LPH Unit (M) (PL 2.1)
- Rear Holder Assembly (M) (PL 2.1)

Replace the LPH Unit (M) (PL 2.1) and perform DC675 Registration Control Setup Cycle. If the problem persists, replace the MCU PWB.

- MCU PWB (7525/30/35) (PL 18.2A)
- MCU PWB (7545/56) (PL 18.2B)

Go to the appropriate RAP

389-627 RC Data Linearity Fail C

BSD-ON:BSD 6.12 Color Registration Control

The result from adding the skew/bow correction value to the C color linearity correction value has exceeded the settable range. (This is a hidden failure. The LPH Slow Scan linearity cannot be guaranteed and Data is only recorded in history.)

Initial Actions

When multiple failures with Chain No. 389 occur, take action according to the priority order in the following table. Solving a higher priority failure may sometimes also repair the other failures. (Chain No. 389 Fail is detected during the execution of Regi Control. However, 389-617 is also detected during power ON.)

Table 1 Chain No. 389Chain No. 389

Priority	Chain Link	Fail Item
1 (High)	389-616	RC Data Over Flow Fail
2	389-604, 389-606, 389-607, 389-609, 389-610, 389-612, 389-613, 389-615,	RC SampleBlock Fail-B
3	389-601, 389-603	RC SampleBlock Fail-A1
4	389-600	RC SampleLateral Fail-A1
5	389-617	RC Lead Regi Over Range Fail
6 (Low)	389-625, 389-626, 389-627, 389-628	RC Data Linearity Fail

Procedure

Check that the value stored in LPH (C) EEPROM is correct. **Has any C color related Chain No. 061 Fail occurred?**

Y N

Display the skew correction amount in DC675 Regi Control Setup Cycle.
Is the "skew correction amount" within the range of +500~-500?

Y N

Check the following:

- Check that the value of DC131 [760-024] is "0".
- The Drum (C) for improper installation.

If no problems are found, replace the following parts in sequence:

- Drum (C) (PL 8.1)
- LPH Unit (C) (PL 2.1)
- Rear Holder Assembly (C) (PL 2.1)

Replace the LPH Unit (C) (PL 2.1) and perform DC675 Registration Control Setup Cycle. If the problem persists, replace the MCU PWB.

- MCU PWB (7525/30/35) (PL 18.2A)
- MCU PWB (7545/56) (PL 18.2B)

Go to the appropriate RAP

389-628 RC Data Linearity Fail K

BSD-ON:BSD 6.12 Color Registration Control

The result from adding the skew/bow correction value to the K color linearity correction value has exceeded the settable range. (This is a hidden failure. The LPH Slow Scan linearity cannot be guaranteed and Data is only recorded in history.)

Initial Actions

When multiple failures with Chain No. 389 occur, take action according to the priority order in the following table. Solving a higher priority failure may sometimes also repair the other failures. (Chain No. 389 Fail is detected during the execution of Regi Control. However, 389-617 is also detected during power ON.)

Table 1 Chain No. 389

Priority	Chain Link	Fail Item
1 (High)	389-616	RC Data Over Flow Fail
2	389-604, 389-606, 389-607, 389-609, 389-610, 389-612, 389-613, 389-615,	RC SampleBlock Fail-B
3	389-601, 389-603	RC SampleBlock Fail-A1
4	389-600	RC SampleLateral Fail-A1
5	389-617	RC Lead Regi Over Range Fail
6 (Low)	389-625, 389-626, 389-627, 389-628	RC Data Linearity Fail

Procedure

Check that the value stored in LPH (K) EEPROM is correct. **Has any K color related Chain No. 061 Fail occurred?**

Y N

Display the skew correction amount in DC675 Regi Control Setup Cycle.

Is the "skew correction amount" within the range of +500~-500?

Y N

Check the following:

- Check that the value of DC131 [760-024] is "0".
- The Drum (K) for improper installation.

If no problems are found, replace the following parts in sequence:

- Drum (K) (PL 8.1)
- LPH Unit (K) (PL 2.1)
- Rear Holder Assembly (K) (PL 2.1)

Replace the LPH Unit (K) (PL 2.1) and perform DC675 Registration Control Setup Cycle. If the problem persists, replace the MCU PWB.

- MCU PWB (7525/30/35) (PL 18.2A)
- MCU PWB (7545/56) (PL 18.2B)

Go to the appropriate RAP

391-313 CRUM ASIC Communication Fault

Communication error between CPU of the MCU PWB and ASIC was detected.

NOTE: *When turning the power OFF, turn OFF the Power Switch first and then the Main Power Switch.*

Cause/Action

1. Turn the power OFF and ON.
2. Turn the power OFF and replace the MCU PWB.
   - MCU PWB (7525/30/35) (PL 18.2A)
   - MCU PWB (7545/56) (PL 18.2B)

391-400 Waste Toner Bottle Near Full

BSD-ON:BSD 9.40 Waste Toner Disposal

The Waste Toner Bottle Full Sensor detected Near Full state.

NOTE: *When turning the power OFF, turn OFF the Power Switch first and then the Main Power Switch.*

Procedure

The Waste Toner Bottle needs to be replaced soon. Replace the Waste Toner Bottle (PL 8.2) as required. If the problem persists, check the Waste Toner Bottle Full Sensor.
Turn the power ON and enter the Diag mode. Turn ON DC330 [091-201]. Use a sheet of paper, etc. to block/clear the light path to the Waste Toner Bottle Full Sensor.
Does the display change between High/Low?

Y **N**

Use OF 99-2 Transmissive Sensor RAP to check the Waste Toner Bottle Full Sensor.

Press the Stop button and turn the power OFF.
Replace the MCU PWB.

- MCU PWB (7525/30/35) (PL 18.2A)
- MCU PWB (7545/56) (PL 18.2B)

391-401 Drum Cartridge K Near Life

BSD-ON:BSD 9.6 Drum Life Control (C,K)

It was detected that the replacement timing for Drum (K) is closer than Pre Near.

NOTE: *When turning the power OFF, turn OFF the Power Switch first and then the Main Power Switch.*

Cause/Action

The Drum (K) needs to be replaced soon. Replace the Drum (K) (PL 8.1) as required.

391-402 Drum Cartridge K Life Over

BSD-ON:BSD 9.6 Drum Life Control (C,K)

Drum (K) has reached the end of its life span.

NOTE: *When turning the power OFF, turn OFF the Power Switch first and then the Main Power Switch.*

Cause/Action

Replace the Drum (K) (PL 8.1).

391-411 Drum Cartridge Y Near Life

BSD-ON:BSD 9.5 Drum Life Control (Y,M)

It was detected that the replacement timing for Drum (Y) is closer than Pre Near.

NOTE: *When turning the power OFF, turn OFF the Power Switch first and then the Main Power Switch.*

Cause/Action

The Drum (Y) needs to be replaced soon. Replace the Drum (Y) (PL 8.1) as required.

391-421 Drum Cartridge M Near Life

BSD-ON:BSD 9.5 Drum Life Control (Y,M)

It was detected that the replacement timing for Drum (M) is closer than Pre Near.

NOTE: *When turning the power OFF, turn OFF the Power Switch first and then the Main Power Switch.*

Cause/Action

The Drum (M) needs to be replaced soon. Replace the Drum (M) (PL 8.1) as required.

391-431 Drum Cartridge C Near Life

BSD-ON:BSD 9.6 Drum Life Control (C,K)

It was detected that the replacement timing for Drum (C) is closer than Pre Near.

NOTE: *When turning the power OFF, turn OFF the Power Switch first and then the Main Power Switch.*

Cause/Action

The Drum (C) needs to be replaced soon. Replace the Drum (C) (PL 8.1) as required.

391-480 Drum Cartridge Y Life Over

BSD-ON:BSD 9.5 Drum Life Control (Y,M)

Drum (Y) has reached the end of its life span.

NOTE: *When turning the power OFF, turn OFF the Power Switch first and then the Main Power Switch.*

Cause/Action

Replace Drum (Y) (PL 8.1).

391-481 Drum Cartridge M Life Over

BSD-ON:BSD 9.5 Drum Life Control (Y,M)

Drum (M) has reached the end of its life span.

NOTE: *When turning the power OFF, turn OFF the Power Switch first and then the Main Power Switch.*

Cause/Action

Replace Drum (M) (PL 8.1).

391-482 Drum Cartridge C Life Over

BSD-ON:BSD 9.6 Drum Life Control (C,K)

Drum (C) has reached the end of its life span.

NOTE: *When turning the power OFF, turn OFF the Power Switch first and then the Main Power Switch.*

Cause/Action

Replace Drum (C) (PL 8.1).

391-910 Waste Toner Bottle Not In Position

BSD-ON:BSD 9.40 Waste Toner Disposal

The Waste Toner Bottle is not in the proper position.

NOTE: *When turning the power OFF, turn OFF the Power Switch first and then the Main Power Switch.*

Procedure

Check that the Bottle Guide Assembly at the machine side and the Waste Toner Bottle does not have any deformation or foreign substances, and that they are installed properly.

Is the Waste Toner Bottle installed properly?

Y **N**

Install the Waste Toner Bottle properly. If there is any deformation, replace the Waste Toner Bottle (PL 8.2) and Bottle Guide Assembly (PL 8.2).

Check the Waste Toner Bottle Position Sensor.

Turn the power ON and enter the Diag mode. Enter DC330 [091-200]. Use a sheet of paper, etc. to block/clear the light path to the Waste Toner Bottle Position Sensor.

Does the display change between High/Low?

Y **N**

Use OF 99-2 Transmissive Sensor RAP to check the Waste Toner Bottle Position Sensor.

Press the Stop button and turn the power OFF.

Replace the MCU PWB.

- MCU PWB (7525/30/35) (PL 18.2A)
- MCU PWB (7545/56) (PL 18.2B)

391-911 Waste Toner Bottle Full

BSD-ON:BSD 9.40 Waste Toner Disposal

After the Waste Toner Bottle Near Full has occurred, the PV exceeds the threshold value.

NOTE: *When turning the power OFF, turn OFF the Power Switch first and then the Main Power Switch.*

Procedure

Replace the Waste Toner Bottle (PL 8.2). If the problem persists, check the Waste Toner Bottle Full Sensor. Enter DC330 [091-201]. Use a sheet of paper, etc. to block/clear the light path to the Waste Toner Bottle Full Sensor.

Does the display change between High/Low?

Y **N**

Use OF 99-2 Transmissive Sensor RAP to check the Waste Toner Bottle Full Sensor.

Press the Stop button and turn the power OFF.

Replace the MCU PWB.

- MCU PWB (7525/30/35) (PL 18.2A)
- MCU PWB (7545/56) (PL 18.2B)

391-913 Drum Cartridge K Life End

BSD-ON:BSD 9.6 Drum Life Control (C,K)

Drum (K) has reached the end of its life span.

NOTE: *When turning the power OFF, turn OFF the Power Switch first and then the Main Power Switch.*

Cause/Action

Replace the Drum (K) (PL 8.1).

391-914 Drum CRUM K Communication Fault

BSD-ON:BSD 9.6 Drum Life Control (C,K)

Communication failure with Drum (K) CRUM was detected.

NOTE: *When turning the power OFF, turn OFF the Power Switch first and then the Main Power Switch.*

Cause/Action

1. Turn the power OFF and ON.
2. Turn the power OFF and check the following:
   - The connection between the MD PWB J528 and the Drum CRUM Coupler Assembly (K) P115 for open circuit, short circuit, and poor contact
   - The connection terminals between the Drum (K) CRUM PWB and the Drum CRUM Coupler Assembly (K) CRUM for damage and foreign substances
   - The Drum (K) CRUM PWB for contamination or disengagement
   - The Drum (K) for improper installation

   If no problems are found, replace the following parts in sequence:
   - Drum (K) (PL 8.1)
   - Drum CRUM Coupler Assembly (K) (PL 8.1)
   - MD PWB (7525/30/35) (PL 18.2A)
   - MD PWB (7545/56) (PL 18.2B)
   - MCU PWB (7525/30/35) (PL 18.2A)
   - MCU PWB (7545/56) (PL 18.2B)

391-915 Drum CRUM K Data Broken

BSD-ON:BSD 9.6 Drum Life Control (C,K)

The system detected that the data written to the Drum (K) CRUM and the data read from the Drum (K) CRUM do not match.

NOTE: *When turning the power OFF, turn OFF the Power Switch first and then the Main Power Switch.*

Cause/Action

Remove and reinstall the Drum (K) and check for improper installation. If no problems are found, replace the Drum (K) (PL 8.1).

391-916 Drum CRUM K Data Mismatch

BSD-ON:BSD 9.6 Drum Life Control (C,K)

Incorrect authentication area data was detected in Drum (K) CRUM.

NOTE: *When turning the power OFF, turn OFF the Power Switch first and then the Main Power Switch.*

Cause/Action

Remove and reinstall the Drum (K) and check for improper installation. If no problems are found, replace it with the correct Drum (K) (PL 8.1).

391-917 Drum CRUM Y Communication Fault

BSD-ON:BSD 9.5 Drum Life Control (Y,M)

Communication failure with Drum (Y) CRUM was detected.

NOTE: *When turning the power OFF, turn OFF the Power Switch first and then the Main Power Switch.*

Cause/Action

1. Turn the power OFF and ON.
2. Turn the power OFF and check the following:
   - The connection between the MD PWB J528 and the Drum CRUM Coupler Assembly (Y) P112 for open circuit, short circuit, and poor contact
   - The connection terminals between the Drum (Y) CRUM PWB and the Drum CRUM Coupler Assembly (Y) CRUM for damage and foreign substances
   - The Drum (Y) CRUM PWB for contamination or disengagement
   - The Drum (Y) for improper installation

   If no problems are found, replace the following parts in sequence:
   - Drum (Y) (PL 8.1)
   - Drum CRUM Coupler Assembly (Y) (PL 8.1)
   - MD PWB (7525/30/35) (PL 18.2A)
   - MD PWB (7545/56) (PL 18.2B)
   - MCU PWB (7525/30/35) (PL 18.2A)
   - MCU PWB (7545/56) (PL 18.2B)

391-918 Drum CRUM M Communication Fault

BSD-ON:BSD 9.5 Drum Life Control (Y,M)

Communication failure with Drum (M) CRUM was detected.

NOTE: *When turning the power OFF, turn OFF the Power Switch first and then the Main Power Switch.*

Cause/Action

1. Turn the power OFF and ON.
2. Turn the power OFF and check the following:
   - The connection between the MD PWB J528 and the Drum CRUM Coupler Assembly (M) P113 for open circuit, short circuit, and poor contact
   - The connection terminals between the Drum (M) CRUM PWB and the Drum CRUM Coupler Assembly (M) CRUM for damage and foreign substances
   - The Drum (M) CRUM PWB for contamination or disengagement
   - The Drum (M) for improper installation

   If no problems are found, replace the following parts in sequence:
   - Drum (M) (PL 8.1)
   - Drum CRUM Coupler Assembly (M) (PL 8.1)
   - MD PWB (7525/30/35) (PL 18.2A)
   - MD PWB (7545/56) (PL 18.2B)
   - MCU PWB (7525/30/35) (PL 18.2A)
   - MCU PWB (7545/56) (PL 18.2B)

391-919 Drum CRUM C Communication Fault

BSD-ON:BSD 9.6 Drum Life Control (C,K)

Communication failure with Drum (C) CRUM was detected.

NOTE: *When turning the power OFF, turn OFF the Power Switch first and then the Main Power Switch.*

Cause/Action

1. Turn the power OFF and ON.
2. Turn the power OFF and check the following:
   - The connection between the MD PWB J528 and the Drum CRUM Coupler Assembly (C) P114 for open circuit, short circuit, and poor contact
   - The connection terminals between the Drum (C) CRUM PWB and the Drum CRUM Coupler Assembly (C) CRUM for damage and foreign substances
   - The Drum (C) CRUM PWB for contamination or disengagement
   - The Drum (C) for improper installation

   If no problems are found, replace the following parts in sequence:
   - Drum (C) (PL 8.1)
   - Drum CRUM Coupler Assembly (C) (PL 8.1)
   - MD PWB (7525/30/35) (PL 18.2A)
   - MD PWB (7545/56) (PL 18.2B)
   - MCU PWB (7525/30/35) (PL 18.2A)
   - MCU PWB (7545/56) (PL 18.2B)

391-920 Drum CRUM Y Data Broken

BSD-ON:BSD 9.5 Drum Life Control (Y,M)

The system detected that the data written to the Drum (Y) CRUM and the data read from the Drum (Y) CRUM do not match.

NOTE: *When turning the power OFF, turn OFF the Power Switch first and then the Main Power Switch.*

Cause/Action

Remove and reinstall the Drum (Y) and check for improper installation. If no problems are found, replace the Drum (Y) (PL 8.1).

391-921 Drum CRUM K Not In Position

BSD-ON:BSD 9.6 Drum Life Control (C,K)

The Drum (K) CRUM is not in the proper position (loose CRUM).

NOTE: *When turning the power OFF, turn OFF the Power Switch first and then the Main Power Switch.*

Cause/Action

1. Remove and reinstall the Drum (K).
2. Polish the connection terminals between the Drum (K) CRUM PWB and the Drum CRUM Coupler Assembly (K) CRUM with dry cloth. (When cleaning, do not use Drum cleaner, etc.)
3. Check the following:
   - The connection between the MD PWB J528 and the Drum CRUM Coupler Assembly (K) P115 for open circuit, short circuit, and poor contact
   - The connection terminals between the Drum (K) CRUM PWB and the Drum CRUM Coupler Assembly (K) CRUM for damage and foreign substances
   - The Drum (K) for improper installation

   If no problems are found, replace the following parts in sequence:
   - Drum (K) (PL 8.1)
   - Drum CRUM Coupler Assembly (K) (PL 8.1)
   - MD PWB (7525/30/35) (PL 18.2A)
   - MD PWB (7545/56) (PL 18.2B)
   - MCU PWB (7525/30/35) (PL 18.2A)
   - MCU PWB (7545/56) (PL 18.2B)

391-922 Drum CRUM M Data Broken

BSD-ON:BSD 9.5 Drum Life Control (Y,M)

The system detected that the data written to the Drum (M) CRUM and the data read from the Drum (M) CRUM do not match.

NOTE: *When turning the power OFF, turn OFF the Power Switch first and then the Main Power Switch.*

Cause/Action

Remove and reinstall the Drum (M) and check for improper installation. If no problems are found, replace the Drum (M) (PL 8.1).

391-923 Drum CRUM C Data Broken

BSD-ON:BSD 9.6 Drum Life Control (C,K)

The system detected that the data written to the Drum (C) CRUM and the data read from the Drum (C) CRUM do not match.

NOTE: *When turning the power OFF, turn OFF the Power Switch first and then the Main Power Switch.*

Cause/Action

Remove and reinstall the Drum (C) and check for improper installation. If no problems are found, replace the Drum (C) (PL 8.1).

391-924 Drum CRUM Y Data Mismatch

BSD-ON:BSD 9.5 Drum Life Control (Y,M)

Incorrect authentication area data was detected in Drum (Y) CRUM.

NOTE: *When turning the power OFF, turn OFF the Power Switch first and then the Main Power Switch.*

Cause/Action

Remove and reinstall the Drum (Y) and check for improper installation. If no problems are found, replace it with the correct Drum (Y) (PL 8.1).

391-925 Drum CRUM M Data Mismatch

BSD-ON:BSD 9.5 Drum Life Control (Y,M)

Incorrect authentication area data was detected in Drum (M) CRUM.

NOTE: *When turning the power OFF, turn OFF the Power Switch first and then the Main Power Switch.*

Cause/Action

Remove and reinstall the Drum (M) and check for improper installation. If no problems are found, replace it with the correct Drum (M) (PL 8.1).

391-926 Drum CRUM C Data Mismatch

BSD-ON:BSD 9.6 Drum Life Control (C,K)

Incorrect authentication area data was detected in Drum (C) CRUM.

NOTE: *When turning the power OFF, turn OFF the Power Switch first and then the Main Power Switch.*

Cause/Action

Remove and reinstall the Drum (C) and check for improper installation. If no problems are found, replace it with the correct Drum (C) (PL 8.1).

391-927 Drum CRUM Y Not In Position

BSD-ON:BSD 9.5 Drum Life Control (Y,M)

The Drum (Y) CRUM is not in the proper position (loose CRUM).

NOTE: *When turning the power OFF, turn OFF the Power Switch first and then the Main Power Switch.*

Cause/Action

1. Remove and reinstall the Drum (Y).
2. Polish the connection terminals between the Drum (Y) CRUM PWB and the Drum CRUM Coupler Assembly (Y) CRUM with dry cloth. (When cleaning, do not use Drum cleaner, etc.)
3. Check the following:
   - The connection between the MD PWB J528 and the Drum CRUM Coupler Assembly (Y) P112 for open circuit, short circuit, and poor contact
   - The connection terminals between the Drum (Y) CRUM PWB and the Drum CRUM Coupler Assembly (Y) CRUM for damage and foreign substances
   - The Drum (Y) for improper installation

   If no problems are found, replace the following parts in sequence:
   - Drum (Y) (PL 8.1)
   - Drum CRUM Coupler Assembly (Y) (PL 8.1)
   - MD PWB (7525/30/35) (PL 18.2A)
   - MD PWB (7545/56) (PL 18.2B)
   - MCU PWB (7525/30/35) (PL 18.2A)
   - MCU PWB (7545/56) (PL 18.2B)

391-928 Drum CRUM M Not In Position

BSD-ON:BSD 9.5 Drum Life Control (Y,M)

The Drum (M) CRUM is not in the proper position (loose CRUM).

NOTE: *When turning the power OFF, turn OFF the Power Switch first and then the Main Power Switch.*

Cause/Action

1. Remove and reinstall the Drum (M).
2. Polish the connection terminals between the Drum (M) CRUM PWB and the Drum CRUM Coupler Assembly (M) CRUM with dry cloth. (When cleaning, do not use Drum cleaner, etc.)
3. Check the following:
   - The connection between the MD PWB J528 and the Drum CRUM Coupler Assembly (M) P113 for open circuit, short circuit, and poor contact
   - The connection terminals between the Drum (M) CRUM PWB and the Drum CRUM Coupler Assembly (M) CRUM for damage and foreign substances
   - The Drum (M) for improper installation

   If no problems are found, replace the following parts in sequence:
   - Drum (M) (PL 8.1)
   - Drum CRUM Coupler Assembly (M) (PL 8.1)
   - MD PWB (7525/30/35) (PL 18.2A)
   - MD PWB (7545/56) (PL 18.2B)
   - MCU PWB (7525/30/35) (PL 18.2A)
   - MCU PWB (7545/56) (PL 18.2B)

391-929 Drum CRUM C Not In Position

BSD-ON:BSD 9.6 Drum Life Control (C,K)

The Drum (C) CRUM is not in the proper position (loose CRUM).

NOTE: *When turning the power OFF, turn OFF the Power Switch first and then the Main Power Switch.*

Cause/Action

1. Remove and reinstall the Drum (C).
2. Polish the connection terminals between the Drum (C) CRUM PWB and the Drum CRUM Coupler Assembly (C) CRUM with dry cloth. (When cleaning, do not use Drum cleaner, etc.)
3. Check the following:
   - The connection between the MD PWB J528 and the Drum CRUM Coupler Assembly (C) P114 for open circuit, short circuit, and poor contact
   - The connection terminals between the Drum (C) CRUM PWB and the Drum CRUM Coupler Assembly (C) CRUM for damage and foreign substances
   - The Drum (C) for improper installation

   If no problems are found, replace the following parts in sequence:
   - Drum (C) (PL 8.1)
   - Drum CRUM Coupler Assembly (C) (PL 8.1)
   - MD PWB (7525/30/35) (PL 18.2A)
   - MD PWB (7545/56) (PL 18.2B)
   - MCU PWB (7525/30/35) (PL 18.2A)
   - MCU PWB (7545/56) (PL 18.2B)

392-312 ATC Fault [Y]

BSD-ON:BSD 9.15 Development (Y) (7525,7530,7535)

BSD-ON:BSD 9.16 Development (Y) (7545,7556)

The frequency at which the ATC Average Fail [Y] or the ATC Amplitude Fail [Y] has been occurring has exceeded the threshold value.

NOTE: *•Although this failure can be cleared by turning the power OFF and ON and it will be possible to output a few sheets of printouts, when this failure has occurred a certain number of times, it will no longer be clearable by turning the power OFF and ON. To clear it, clear the value of DC131 [752-346] (ATC Fail [Y]) or DC131 [752-350] (ATC Fail Continuous Count [Y]) to "0". If the machine is not repaired back to normal status, this failure will occur again during the operation.*

- *When turning the power OFF, turn OFF the Power Switch first and then the Main Power Switch.*

Procedure

Check the following:

- The connection between the ATC Sensor (Y) and the ATC PWB J124 for open circuit, short circuit, and poor contact
- The connection between the ATC PWB J633 and the MD PWB J528 for open circuit, short circuit, and poor contact
- The Toner Dispense Motor (Y) for revolution failure: DC330 [093-001] (PL 5.1)
- The Drum/Dev Drive Motor (Y, M, C) for revolution failure (7525/30/35): DC330 [091-026] (PL 3.3A)
- The Drum Drive Motor (Y, M, C) for revolution failure (7545/56): DC330 [091-027] (PL 3.3B)
- The Dev Drive Motor (Y, M, C) for revolution failure (7545/56): DC330 [093-022] (PL 3.3B)
- The path from Toner Cartridge (Y) to Developer (Y) for toner blockage
- The Developer (Y) for internal toner blockage
- The Toner Cartridge (Y) for internal toner blockage

If no problems are found, replace the following parts in sequence:

- ATC Sensor (Y) (PL 5.2)
- ATC PWB (PL 5.2)
- MD PWB (7525/30/35) (PL 18.2A)
- MD PWB (7545/56) (PL 18.2B)
- MCU PWB (7525/30/35) (PL 18.2A)
- MCU PWB (7545/56) (PL 18.2B)

392-313 ATC Fault [M]

BSD-ON:BSD 9.17 Development (M) (7525,7530,7535)

BSD-ON:BSD 9.18 Development (M) (7545,7556)

The frequency at which the ATC Average Fail [M] or the ATC Amplitude Fail [M] has been occurring has exceeded the threshold value.

NOTE: *•Although this failure can be cleared by turning the power OFF and ON and it will be possible to output a few sheets of printouts, when this failure has occurred a certain number of times, it will no longer be clearable by turning the power OFF and ON. To clear it, clear the value of DC131 [752-347] (ATC Fail [M]) or DC131 [752-351] (ATC Fail Continuous Count [M]) to "0". If the machine is not repaired back to normal status, this failure will occur again during the operation.*

- *When turning the power OFF, turn OFF the Power Switch first and then the Main Power Switch.*

Procedure

Check the following:

- The connection between the ATC Sensor (M) and the ATC PWB J125 for open circuit, short circuit, and poor contact
- The connection between the ATC PWB J633 and the MD PWB J528 for open circuit, short circuit, and poor contact
- The Toner Dispense Motor (M) for revolution failure: DC330 [093-006] (PL 5.1)
- The Drum/Dev Drive Motor (Y, M, C) for revolution failure (7525/30/35): DC330 [091-026] (PL 3.3A)
- The Drum Drive Motor (Y, M, C) for revolution failure (7545/56): DC330 [091-027] (PL 3.3B)
- The Dev Drive Motor (Y, M, C) for revolution failure (7545/56): DC330 [093-022] (PL 3.3B)
- The path from Toner Cartridge (M) to Developer (M) for toner blockage
- The Developer (M) for internal toner blockage
- The Toner Cartridge (M) for internal toner blockage

If no problems are found, replace the following parts in sequence:

- ATC Sensor (M) (PL 5.2)
- ATC PWB (PL 5.2)
- MD PWB (7525/30/35) (PL 18.2A)
- MD PWB (7545/56) (PL 18.2B)
- MCU PWB (7525/30/35) (PL 18.2A)
- MCU PWB (7545/56) (PL 18.2B)

392-314 ATC Fault [C]

BSD-ON:BSD 9.19 Development (C) (7525,7530,7535)

BSD-ON:BSD 9.20 Development (C) (7545,7556)

The frequency at which the ATC Average Fail [C] or the ATC Amplitude Fail [C] has been occurring has exceeded the threshold value.

NOTE: *•Although this failure can be cleared by turning the power OFF and ON and it will be possible to output a few sheets of printouts, when this failure has occurred a certain number of times, it will no longer be clearable by turning the power OFF and ON. To clear it, clear the value of DC131 [752-348] (ATC Fail [C]) or DC131 [752-352] (ATC Fail Continuous Count [C]) to "0". If the machine is not repaired back to normal status, this failure will occur again during the operation.*

- *When turning the power OFF, turn OFF the Power Switch first and then the Main Power Switch.*

Procedure

Check the following:

- The connection between the ATC Sensor (C) and the ATC PWB J126 for open circuit, short circuit, and poor contact
- The connection between the ATC PWB J633 and the MD PWB J528 for open circuit, short circuit, and poor contact
- The Toner Dispense Motor (C) for revolution failure: DC330 [093-011] (PL 5.1)
- The Drum/Dev Drive Motor (Y, M, C) for revolution failure (7525/30/35): DC330 [091-026] (PL 3.3A)
- The Drum Drive Motor (Y, M, C) for revolution failure (7545/56): DC330 [091-027] (PL 3.3B)
- The Dev Drive Motor (Y, M, C) for revolution failure (7545/56): DC330 [093-022] (PL 3.3B)
- The path from Toner Cartridge (C) to Developer (C) for toner blockage
- The Developer (C) for internal toner blockage
- The Toner Cartridge (C) for internal toner blockage

If no problems are found, replace the following parts in sequence:

- ATC Sensor (C) (PL 5.2)
- ATC PWB (PL 5.2)
- MD PWB (7525/30/35) (PL 18.2A)
- MD PWB (7545/56) (PL 18.2B)
- MCU PWB (7525/30/35) (PL 18.2A)
- MCU PWB (7545/56) (PL 18.2B)

392-315 ATC Fault [K]

BSD-ON:BSD 9.21 Development (K) (7525,7530,7535)

BSD-ON:BSD 9.22 Development (K) (7545,7556)

The frequency at which the ATC Average Fail [K] or the ATC Amplitude Fail [K] has been occurring has exceeded the threshold value.

NOTE: *•Although this failure can be cleared by turning the power OFF and ON and it will be possible to output a few sheets of printouts, when this failure has occurred a certain number of times, it will no longer be clearable by turning the power OFF and ON. To clear it, clear the value of DC131 [752-349] (ATC Fail [K]) or DC131 [752-353] (ATC Fail Continuous Count [K]) to "0". If the machine is not repaired back to normal status, this failure will occur again during the operation.*

- *When turning the power OFF, turn OFF the Power Switch first and then the Main Power Switch.*

Procedure

Check the following:

- The connection between the ATC Sensor (K) and the ATC PWB J127 for open circuit, short circuit, and poor contact
- The connection between the ATC PWB J633 and the MD PWB J528 for open circuit, short circuit, and poor contact
- The Toner Dispense Motor (K) for revolution failure: DC330 [093-016] (PL 5.1)
- The Drum/Dev Drive Motor (K) for revolution failure (7525/30/35): DC330 [091-033] (PL 3.3A)
- The Drum/Dev Drive Motor (K) for revolution failure (7545/56): DC330 [091-033] (PL 3.3B)
- The path from Toner Cartridge (K) to Developer (K) for toner blockage
- The Developer (K) for internal toner blockage
- The Toner Cartridge (K) for internal toner blockage

If no problems are found, replace the following parts in sequence:

- ATC Sensor (K) (PL 5.2)
- ATC PWB (PL 5.2)
- MD PWB (7525/30/35) (PL 18.2A)
- MD PWB (7545/56) (PL 18.2B)
- MCU PWB (7525/30/35) (PL 18.2A)
- MCU PWB (7545/56) (PL 18.2B)

392-649 ADC Shutter Open Fault

BSD-ON:BSD 9.27 ADC and Environment Sensing

The ADC Sensor shutters is open (cannot be closed). (This is a hidden failure. Data is only recorded in history.)

NOTE: *When turning the power OFF, turn OFF the Power Switch first and then the Main Power Switch.*

Procedure

Check the connection between the ADC Sensor (MOB ADC Assembly) J153 and the MCU PWB J415 for open circuit, short circuit, and poor contact. Also check whether there is opening/closing failure due to foreign substances/burrs, etc. at the shutter section of the ADC Sensor.

If no problems are found, replace the following parts in sequence:

- MOB ADC Assembly (PL 18.5)
- MCU PWB (7525/30/35) (PL 18.2A)
- MCU PWB (7545/56) (PL 18.2B)

392-650 ADC Shutter Close Fault

BSD-ON:BSD 9.27 ADC and Environment Sensing

The ADC Sensor shutters is closed (cannot be opened). (This is a hidden failure. Data is only recorded in history.)

NOTE: *When turning the power OFF, turn OFF the Power Switch first and then the Main Power Switch.*

Procedure

Check the connection between the ADC Sensor (MOB ADC Assembly) J153 and the MCU PWB J415 for open circuit, short circuit, and poor contact. Also check whether there is opening/closing failure due to foreign substances/burrs, etc. at the shutter section of the ADC Sensor.

If no problems are found, replace the following parts in sequence:

- MOB ADC Assembly (PL 18.5)
- MCU PWB (7525/30/35) (PL 18.2A)
- MCU PWB (7545/56) (PL 18.2B)

392-651 ADC Sensor Fault

BSD-ON:BSD 9.27 ADC and Environment Sensing

The ADC Sensor read value of the density reference patch is abnormal. (This is a hidden failure. Data is only recorded in history.)

NOTE: *When turning the power OFF, turn OFF the Power Switch first and then the Main Power Switch.*

Procedure

Check the connection between the ADC Sensor (MOB ADC Assembly) J153 and the MCU PWB J415 for open circuit, short circuit, and poor contact. Also check whether there is poor connection or foreign substances at the detection section of the ADC Sensor.

If no problems are found, replace the following parts in sequence:

- MOB ADC Assembly (PL 18.5)
- IBT Assembly (PL 6.1)
- MCU PWB (7525/30/35) (PL 18.2A)
- MCU PWB (7545/56) (PL 18.2B)

392-653 ATC Average Fault [Y]

BSD-ON:BSD 9.15 Development (Y) (7525,7530,7535)

BSD-ON:BSD 9.16 Development (Y) (7545,7556)

The average measured value of ATC Sensor (Y) is out of the range of appropriate values. (This is a hidden failure. Data is only recorded in history.)

NOTE: *When turning the power OFF, turn OFF the Power Switch first and then the Main Power Switch.*

Procedure

Check the following:

- The connection between the ATC Sensor (Y) and the ATC PWB J124 for open circuit, short circuit, and poor contact
- The connection between the ATC PWB J633 and the MD PWB J528 for open circuit, short circuit, and poor contact
- The Toner Dispense Motor (Y) for revolution failure: DC330 [093-001] (PL 5.1)
- The Drum/Dev Drive Motor (Y, M, C) for revolution failure (7525/30/35): DC330 [091-026] (PL 3.3A)
- The Drum Drive Motor (Y, M, C) for revolution failure (7545/56): DC330 [091-027] (PL 3.3B)
- The Dev Drive Motor (Y, M, C) for revolution failure (7545/56): DC330 [093-022] (PL 3.3B)
- The path from Toner Cartridge (Y) to Developer (Y) for toner blockage
- The Developer (Y) for internal toner blockage
- The Toner Cartridge (Y) for internal toner blockage

If no problems are found, replace the following parts in sequence:

- ATC Sensor (Y) (PL 5.2)
- ATC PWB (PL 5.2)
- MD PWB (7525/30/35) (PL 18.2A)
- MD PWB (7545/56) (PL 18.2B)
- MCU PWB (7525/30/35) (PL 18.2A)
- MCU PWB (7545/56) (PL 18.2B)

392-654 ATC Average Fault [M]

BSD-ON:BSD 9.17 Development (M) (7525,7530,7535)

BSD-ON:BSD 9.18 Development (M) (7545,7556)

The average measured value of ATC Sensor (M) is out of the range of appropriate values. (This is a hidden failure. Data is only recorded in history.)

NOTE: *When turning the power OFF, turn OFF the Power Switch first and then the Main Power Switch.*

Procedure

Check the following:

- The connection between the ATC Sensor (M) and the ATC PWB J125 for open circuit, short circuit, and poor contact
- The connection between the ATC PWB J633 and the MD PWB J528 for open circuit, short circuit, and poor contact
- The Toner Dispense Motor (M) for revolution failure: DC330 [093-006] (PL 5.1)
- The Drum/Dev Drive Motor (Y, M, C) for revolution failure (7525/30/35): DC330 [091-026] (PL 3.3A)
- The Drum Drive Motor (Y, M, C) for revolution failure (7545/56): DC330 [091-027] (PL 3.3B)
- The Dev Drive Motor (Y, M, C) for revolution failure (7545/56): DC330 [093-022] (PL 3.3B)
- The path from Toner Cartridge (M) to Developer (M) for toner blockage
- The Developer (M) for internal toner blockage
- The Toner Cartridge (M) for internal toner blockage

If no problems are found, replace the following parts in sequence:

- ATC Sensor (M) (PL 5.2)
- ATC PWB (PL 5.2)
- MD PWB (7525/30/35) (PL 18.2A)
- MD PWB (7545/56) (PL 18.2B)
- MCU PWB (7525/30/35) (PL 18.2A)
- MCU PWB (7545/56) (PL 18.2B)

392-655 ATC Average Fault [C]

BSD-ON:BSD 9.19 Development (C) (7525,7530,7535)

BSD-ON:BSD 9.20 Development (C) (7545,7556)

The average measured value of ATC Sensor (C) is out of the range of appropriate values. (This is a hidden failure. Data is only recorded in history.)

NOTE: *When turning the power OFF, turn OFF the Power Switch first and then the Main Power Switch.*

Procedure

Check the following:

- The connection between the ATC Sensor (C) and the ATC PWB J126 for open circuit, short circuit, and poor contact
- The connection between the ATC PWB J633 and the MD PWB J528 for open circuit, short circuit, and poor contact
- The Toner Dispense Motor (C) for revolution failure: DC330 [093-011] (PL 5.1)
- The Drum/Dev Drive Motor (Y, M, C) for revolution failure (7525/30/35): DC330 [091-026] (PL 3.3A)
- The Drum Drive Motor (Y, M, C) for revolution failure (7545/56): DC330 [091-027] (PL 3.3B)
- The Dev Drive Motor (Y, M, C) for revolution failure (7545/56): DC330 [093-022] (PL 3.3B)
- The path from Toner Cartridge (C) to Developer (C) for toner blockage
- The Developer (C) for internal toner blockage
- The Toner Cartridge (C) for internal toner blockage

If no problems are found, replace the following parts in sequence:

- ATC Sensor (C) (PL 5.2)
- ATC PWB (PL 5.2)
- MD PWB (7525/30/35) (PL 18.2A)
- MD PWB (7545/56) (PL 18.2B)
- MCU PWB (7525/30/35) (PL 18.2A)
- MCU PWB (7545/56) (PL 18.2B)

392-656 ATC Average Fault [K]

BSD-ON:BSD 9.21 Development (K) (7525,7530,7535)

BSD-ON:BSD 9.22 Development (K) (7545,7556)

The average measured value of ATC Sensor (K) is out of the range of appropriate values. (This is a hidden failure. Data is only recorded in history.)

NOTE: *When turning the power OFF, turn OFF the Power Switch first and then the Main Power Switch.*

Procedure

Check the following:

- The connection between the ATC Sensor (K) and the ATC PWB J127 for open circuit, short circuit, and poor contact
- The connection between the ATC PWB J633 and the MD PWB J528 for open circuit, short circuit, and poor contact
- The Toner Dispense Motor (K) for revolution failure: DC330 [093-016] (PL 5.1)
- The Drum/Dev Drive Motor (K) for revolution failure (7525/30/35): DC330 [091-033] (PL 3.3A)
- The Drum/Dev Drive Motor (K) for revolution failure (7545/56): DC330 [091-033] (PL 3.3B)
- The path from Toner Cartridge (K) to Developer (K) for toner blockage
- The Developer (K) for internal toner blockage
- The Toner Cartridge (K) for internal toner blockage

If no problems are found, replace the following parts in sequence:

- ATC Sensor (K) (PL 5.2)
- ATC PWB (PL 5.2)
- MD PWB (7525/30/35) (PL 18.2A)
- MD PWB (7545/56) (PL 18.2B)
- MCU PWB (7525/30/35) (PL 18.2A)
- MCU PWB (7545/56) (PL 18.2B)

392-657 ATC Amplitude Fault [Y]

BSD-ON:BSD 9.15 Development (Y) (7525,7530,7535)

BSD-ON:BSD 9.16 Development (Y) (7545,7556)

The difference between the maximum and minimum values in the ATC Sensor (Y) measurement set is lower than the threshold value. (This is a hidden failure. Data is only recorded in history.)

NOTE: *When turning the power OFF, turn OFF the Power Switch first and then the Main Power Switch.*

Procedure

Check the following:

- The connection between the ATC Sensor (Y) and the ATC PWB J124 for open circuit, short circuit, and poor contact
- The connection between the ATC PWB J633 and the MD PWB J528 for open circuit, short circuit, and poor contact
- The Toner Dispense Motor (Y) for revolution failure: DC330 [093-001] (PL 5.1)
- The Drum/Dev Drive Motor (Y, M, C) for revolution failure (7525/30/35): DC330 [091-026] (PL 3.3A)
- The Drum Drive Motor (Y, M, C) for revolution failure (7545/56): DC330 [091-027] (PL 3.3B)
- The Dev Drive Motor (Y, M, C) for revolution failure (7545/56): DC330 [093-022] (PL 3.3B)
- The path from Toner Cartridge (Y) to Developer (Y) for toner blockage
- The Developer (Y) for internal toner blockage
- The Toner Cartridge (Y) for internal toner blockage

If no problems are found, replace the following parts in sequence:

- ATC Sensor (Y) (PL 5.2)
- ATC PWB (PL 5.2)
- MD PWB (7525/30/35) (PL 18.2A)
- MD PWB (7545/56) (PL 18.2B)
- MCU PWB (7525/30/35) (PL 18.2A)
- MCU PWB (7545/56) (PL 18.2B)

392-658 ATC Amplitude Fault [M]

BSD-ON:BSD 9.17 Development (M) (7525,7530,7535)

BSD-ON:BSD 9.18 Development (M) (7545,7556)

The difference between the maximum and minimum values in the ATC Sensor (M) measurement set is lower than the threshold value. (This is a hidden failure. Data is only recorded in history.)

NOTE: *When turning the power OFF, turn OFF the Power Switch first and then the Main Power Switch.*

Procedure

Check the following:

- The connection between the ATC Sensor (M) and the ATC PWB J125 for open circuit, short circuit, and poor contact
- The connection between the ATC PWB J633 and the MD PWB J528 for open circuit, short circuit, and poor contact
- The Toner Dispense Motor (M) for revolution failure: DC330 [093-006] (PL 5.1)
- The Drum/Dev Drive Motor (Y, M, C) for revolution failure (7525/30/35): DC330 [091-026] (PL 3.3A)
- The Drum Drive Motor (Y, M, C) for revolution failure (7545/56): DC330 [091-027] (PL 3.3B)
- The Dev Drive Motor (Y, M, C) for revolution failure (7545/56): DC330 [093-022] (PL 3.3B)
- The path from Toner Cartridge (M) to Developer (M) for toner blockage
- The Developer (M) for internal toner blockage
- The Toner Cartridge (M) for internal toner blockage

If no problems are found, replace the following parts in sequence:

- ATC Sensor (M) (PL 5.2)
- ATC PWB (PL 5.2)
- MD PWB (7525/30/35) (PL 18.2A)
- MD PWB (7545/56) (PL 18.2B)
- MCU PWB (7525/30/35) (PL 18.2A)
- MCU PWB (7545/56) (PL 18.2B)

392-659 ATC Amplitude Fault [C]

BSD-ON:BSD 9.19 Development (C) (7525,7530,7535)

BSD-ON:BSD 9.20 Development (C) (7545,7556)

The difference between the maximum and minimum values in the ATC Sensor (C) measurement set is lower than the threshold value. (This is a hidden failure. Data is only recorded in history.)

NOTE: *When turning the power OFF, turn OFF the Power Switch first and then the Main Power Switch.*

Procedure

Check the following:

- The connection between the ATC Sensor (C) and the ATC PWB J126 for open circuit, short circuit, and poor contact
- The connection between the ATC PWB J633 and the MD PWB J528 for open circuit, short circuit, and poor contact
- The Toner Dispense Motor (C) for revolution failure: DC330 [093-011] (PL 5.1)
- The Drum/Dev Drive Motor (Y, M, C) for revolution failure (7525/30/35): DC330 [091-026] (PL 3.3A)
- The Drum Drive Motor (Y, M, C) for revolution failure (7545/56): DC330 [091-027] (PL 3.3B)
- The Dev Drive Motor (Y, M, C) for revolution failure (7545/56): DC330 [093-022] (PL 3.3B)
- The path from Toner Cartridge (C) to Developer (C) for toner blockage
- The Developer (C) for internal toner blockage
- The Toner Cartridge (C) for internal toner blockage

If no problems are found, replace the following parts in sequence:

- ATC Sensor (C) (PL 5.2)
- ATC PWB (PL 5.2)
- MD PWB (7525/30/35) (PL 18.2A)
- MD PWB (7545/56) (PL 18.2B)
- MCU PWB (7525/30/35) (PL 18.2A)
- MCU PWB (7545/56) (PL 18.2B)

392-660 ATC Amplitude Fault [K]

BSD-ON:BSD 9.21 Development (K) (7525,7530,7535)

BSD-ON:BSD 9.22 Development (K) (7545,7556)

The difference between the maximum and minimum values in the ATC Sensor (K) measurement set is lower than the threshold value. (This is a hidden failure. Data is only recorded in history.)

NOTE: *When turning the power OFF, turn OFF the Power Switch first and then the Main Power Switch.*

Procedure

Check the following:

- The connection between the ATC Sensor (K) and the ATC PWB J127 for open circuit, short circuit, and poor contact
- The connection between the ATC PWB J633 and the MD PWB J528 for open circuit, short circuit, and poor contact
- The Toner Dispense Motor (K) for revolution failure: DC330 [093-016] (PL 5.1)
- The Drum/Dev Drive Motor (K) for revolution failure (7525/30/35): DC330 [091-033] (PL 3.3A)
- The Drum/Dev Drive Motor (K) for revolution failure (7545/56): DC330 [091-033] (PL 3.3B)
- The path from Toner Cartridge (K) to Developer (K) for toner blockage
- The Developer (K) for internal toner blockage
- The Toner Cartridge (K) for internal toner blockage

If no problems are found, replace the following parts in sequence:

- ATC Sensor (K) (PL 5.2)
- ATC PWB (PL 5.2)
- MD PWB (7525/30/35) (PL 18.2A)
- MD PWB (7545/56) (PL 18.2B)
- MCU PWB (7525/30/35) (PL 18.2A)
- MCU PWB (7545/56) (PL 18.2B)

392-661 Temperature Sensor Fault

BSD-ON:BSD 9.27 ADC and Environment Sensing

Abnormal value was detected by the ENVIRONMENT SENSOR (Temperature). (This is a hidden failure. Data is only recorded in history.)

NOTE: *When turning the power OFF, turn OFF the Power Switch first and then the Main Power Switch.*

Procedure

Check the connection between the Environment Sensor (MOB ADC Assembly) J154 and the MCU PWB J415 for open circuit, short circuit, and poor contact. Also check whether there is poor connection or foreign substances at the detection section of the Environment Sensor.

If no problems are found, replace the following parts in sequence:

- MOB ADC Assembly (PL 18.5)
- MCU PWB (7525/30/35) (PL 18.2A)
- MCU PWB (7545/56) (PL 18.2B)

392-662 Humidity Sensor Fault

BSD-ON:BSD 9.27 ADC and Environment Sensing

Abnormal value was detected by the ENVIRONMENT SENSOR (Humidity). (This is a hidden failure. Data is only recorded in history.)

NOTE: *When turning the power OFF, turn OFF the Power Switch first and then the Main Power Switch.*

Procedure

Check the connection between the Environment Sensor (MOB ADC Assembly) J154 and the MCU PWB J415 for open circuit, short circuit, and poor contact. Also check whether there is poor connection or foreign substances at the detection section of the Environment Sensor.

If no problems are found, replace the following parts in sequence:

- MOB ADC Assembly (PL 18.5)
- MCU PWB (7525/30/35) (PL 18.2A)
- MCU PWB (7545/56) (PL 18.2B)

392-670 ADC Patch Fault [Y]

BSD-ON:BSD 9.27 ADC and Environment Sensing

The ADC patch of Y color is abnormally light. (This is a hidden failure. Data is only recorded in history.)

NOTE: *When turning the power OFF, turn OFF the Power Switch first and then the Main Power Switch.*

Procedure

Enter DC122 Fail History. Check whether ADC Sensor Fail or ATC Fail [Y] has occurred.

Has Fail 392-651 or 392-312 occurred?

Y **N**

Turn the power OFF and check the following:

- The Drum (Y) for contamination
- The LPH (Y) for contamination
- The 1st BTR (Y) for contamination
- The Transfer Belt for contamination
- The connection and board springs between the HVPS (1st/2nd/DTC) and the 1st BTR (Y) for open circuits, short circuits, and poor contacts

(7525/30/35)

- The connection and board springs between the HVPS (Dev/BCR) and the Magnet Roll (Y) for open circuits, short circuits, and poor contacts

(7545/56)

- The connection and board springs between the HVPS (Dev) and the Magnet Roll (Y) for open circuits, short circuits, and poor contacts

If no problems are found, replace the following parts in sequence:

- Drum (Y) (PL 8.1)
- LPH Assembly (Y) (PL 2.1)
- HVPS (Dev/BCR) (7525/30/35) (PL 18.6A)
- HVPS (Dev) (7545/56) (PL 5.3)
- HVPS (1st/2nd/DTC) (PL 6.2)
- MCU PWB (7525/30/35) (PL 18.2A)
- MCU PWB (7545/56) (PL 18.2B)

Go to the appropriate RAP

392-671 ADC Patch Fault [M]

BSD-ON:BSD 9.27 ADC and Environment Sensing

The ADC patch of M color is abnormally light. (This is a hidden failure. Data is only recorded in history.)

NOTE: *When turning the power OFF, turn OFF the Power Switch first and then the Main Power Switch.*

Procedure

Enter DC122 Fail History. Check whether ADC Sensor Fail or ATC Fail [M] has occurred.

Has Fail 392-651 or 392-313 occurred?

Y N

Turn the power OFF and check the following:

- The Drum (M) for contamination
- The LPH (M) for contamination
- The 1st BTR (M) for contamination
- The Transfer Belt for contamination
- The connection and board springs between the HVPS (1st/2nd/DTC) and the 1st BTR (M) for open circuits, short circuits, and poor contacts

(7525/30/35)

- The connection and board springs between the HVPS (Dev/BCR) and the Magnet Roll (M) for open circuits, short circuits, and poor contacts

(7545/56)

- The connection and board springs between the HVPS (Dev) and the Magnet Roll (M) for open circuits, short circuits, and poor contacts

If no problems are found, replace the following parts in sequence:

- Drum (M) (PL 8.1)
- LPH Assembly (M) (PL 2.1)
- HVPS (Dev/BCR) (7525/30/35) (PL 18.6A)
- HVPS (Dev) (7545/56) (PL 5.3)
- HVPS (1st/2nd/DTC) (PL 6.2)
- MCU PWB (7525/30/35) (PL 18.2A)
- MCU PWB (7545/56) (PL 18.2B)

Go to the appropriate RAP

392-672 ADC Patch Fault [C]

BSD-ON:BSD 9.27 ADC and Environment Sensing

The ADC patch of C color is abnormally light. (This is a hidden failure. Data is only recorded in history.)

NOTE: *When turning the power OFF, turn OFF the Power Switch first and then the Main Power Switch.*

Procedure

Enter DC122 Fail History. Check whether ADC Sensor Fail or ATC Fail [C] has occurred.

Has Fail 392-651 or 392-314 occurred?

Y N

Turn the power OFF and check the following:

- The Drum (C) for contamination
- The LPH (C) for contamination
- The 1st BTR (C) for contamination
- The Transfer Belt for contamination
- The connection and board springs between the HVPS (1st/2nd/DTC) and the 1st BTR (C) for open circuits, short circuits, and poor contacts

(7525/30/35)

- The connection and board springs between the HVPS (Dev/BCR) and the Magnet Roll (C) for open circuits, short circuits, and poor contacts

(7545/56)

- The connection and board springs between the HVPS (Dev) and the Magnet Roll (C) for open circuits, short circuits, and poor contacts

If no problems are found, replace the following parts in sequence:

- Drum (C) (PL 8.1)
- LPH Assembly (C) (PL 2.1)
- HVPS (Dev/BCR) (7525/30/35) (PL 18.6A)
- HVPS (Dev) (7545/56) (PL 5.3)
- HVPS (1st/2nd/DTC) (PL 6.2)
- MCU PWB (7525/30/35) (PL 18.2A)
- MCU PWB (7545/56) (PL 18.2B)

Go to the appropriate RAP

392-673 ADC Patch Fault [K]

BSD-ON:BSD 9.27 ADC and Environment Sensing

The ADC patch of K color is abnormally light. (This is a hidden failure. Data is only recorded in history.)

NOTE: *When turning the power OFF, turn OFF the Power Switch first and then the Main Power Switch.*

Procedure

Enter DC122 Fail History. Check whether ADC Sensor Fail or ATC Fail [K] has occurred.

Has Fail 392-651 or 392-315 occurred?

Y N

Turn the power OFF and check the following:

- The Drum (K) for contamination
- The LPH (K) for contamination
- The 1st BTR (K) for contamination
- The Transfer Belt for contamination
- The connection and board springs between the HVPS (1st/2nd/DTC) and the 1st BTR (K) for open circuits, short circuits, and poor contacts

(7525/30/35)

- The connection and board springs between the HVPS (Dev/BCR) and the Magnet Roll (K) for open circuits, short circuits, and poor contacts

(7545/56)

- The connection and board springs between the HVPS (Dev) and the Magnet Roll (K) for open circuits, short circuits, and poor contacts

If no problems are found, replace the following parts in sequence:

- Drum (K) (PL 8.1)
- LPH Assembly (K) (PL 2.1)
- HVPS (Dev/BCR) (7525/30/35) (PL 18.6A)
- HVPS (Dev) (7545/56) (PL 5.3)
- HVPS (1st/2nd/DTC) (PL 6.2)
- MCU PWB (7525/30/35) (PL 18.2A)
- MCU PWB (7545/56) (PL 18.2B)

Go to the appropriate RAP

392-675 ADC Mini Setup Fault [Y]

BSD-ON:BSD 9.27 ADC and Environment Sensing

The difference in densities among the ADC patches of Y color is abnormal. (This is a hidden failure. Data is only recorded in history.)

NOTE: *When turning the power OFF, turn OFF the Power Switch first and then the Main Power Switch.*

Procedure

Enter DC122 Fail History. Check whether ADC Sensor Fail or ATC Fail [Y] has occurred.

Has Fail 392-651 or 392-312 occurred?

Y N

Turn the power OFF and check the following:

- The Drum (Y) for contamination
- The 1st BTR (Y) for contamination
- The Transfer Belt for contamination
- The connection and board springs between the HVPS (1st/2nd/DTC) and the 1st BTR (Y) for open circuits, short circuits, and poor contacts

(7525/30/35)

- The connection and board springs between the HVPS (Dev/BCR) and the BCR (Y) for open circuits, short circuits, and poor contacts
- The connection and board springs between the HVPS (Dev/BCR) and the Magnet Roll (Y) for open circuits, short circuits, and poor contacts

(7545/56)

- The connection and board springs between the HVPS (BCR) and the BCR (Y) for open circuits, short circuits, and poor contacts
- The connection and board springs between the HVPS (Dev) and the Magnet Roll (Y) for open circuits, short circuits, and poor contacts

If no problems are found, replace the following parts in sequence:

- Drum (Y) (PL 8.1)
- HVPS (Dev/BCR) (7525/30/35) (PL 18.6A)
- HVPS (BCR) (7545/56) (PL 18.6B)
- HVPS (Dev) (7545/56) (PL 5.3)
- HVPS (1st/2nd/DTC) (PL 6.2)
- MCU PWB (7525/30/35) (PL 18.2A)
- MCU PWB (7545/56) (PL 18.2B)

Go to the appropriate RAP

392-676 ADC Mini Setup Fault [M]

BSD-ON:BSD 9.27 ADC and Environment Sensing

The difference in densities among the ADC patches of M color is abnormal. (This is a hidden failure. (Data is only recorded in history.)

NOTE: *When turning the power OFF, turn OFF the Power Switch first and then the Main Power Switch.*

Procedure

Enter DC122 Fail History. Check whether ADC Sensor Fail or ATC Fail [M] has occurred.

Has Fail 392-651 or 392-313 occurred?

Y N

Turn the power OFF and check the following:

- The Drum (M) for contamination
- The 1st BTR (M) for contamination
- The Transfer Belt for contamination
- The connection and board springs between the HVPS (1st/2nd/DTC) and the 1st BTR (M) for open circuits, short circuits, and poor contacts

(7525/30/35)

- The connection and board springs between the HVPS (Dev/BCR) and the BCR (M) for open circuits, short circuits, and poor contacts
- The connection and board springs between the HVPS (Dev/BCR) and the Magnet Roll (M) for open circuits, short circuits, and poor contacts

(7545/56)

- The connection and board springs between the HVPS (BCR) and the BCR (M) for open circuits, short circuits, and poor contacts
- The connection and board springs between the HVPS (Dev) and the Magnet Roll (M) for open circuits, short circuits, and poor contacts

If no problems are found, replace the following parts in sequence:

- Drum (M) (PL 8.1)
- HVPS (Dev/BCR) (7525/30/35) (PL 18.6A)
- HVPS (BCR) (7545/56) (PL 18.6B)
- HVPS (Dev) (7545/56) (PL 5.3)
- HVPS (1st/2nd/DTC) (PL 6.2)
- MCU PWB (7525/30/35) (PL 18.2A)
- MCU PWB (7545/56) (PL 18.2B)

Go to the appropriate RAP

392-677 ADC Mini Setup Fault [C]

BSD-ON:BSD 9.27 ADC and Environment Sensing

The difference in densities among the ADC patches of C color is abnormal. (This is a hidden failure.
Data is only recorded in history.)

NOTE: *When turning the power OFF, turn OFF the Power Switch first and then the Main Power Switch.*

Procedure

Enter DC122 Fail History. Check whether ADC Sensor Fail or ATC Fail [C] has occurred.

Has Fail 392-651 or 392-314 occurred?

Y N

Turn the power OFF and check the following:

- The Drum (C) for contamination
- The 1st BTR (C) for contamination
- The Transfer Belt for contamination
- The connection and board springs between the HVPS (1st/2nd/DTC) and the 1st BTR (C) for open circuits, short circuits, and poor contacts

(7525/30/35)

- The connection and board springs between the HVPS (Dev/BCR) and the BCR (C) for open circuits, short circuits, and poor contacts
- The connection and board springs between the HVPS (Dev/BCR) and the Magnet Roll (C) for open circuits, short circuits, and poor contacts

(7545/56)

- The connection and board springs between the HVPS (BCR) and the BCR (C) for open circuits, short circuits, and poor contacts
- The connection and board springs between the HVPS (Dev) and the Magnet Roll (C) for open circuits, short circuits, and poor contacts

If no problems are found, replace the following parts in sequence:

- Drum (C) (PL 8.1)
- HVPS (Dev/BCR) (7525/30/35) (PL 18.6A)
- HVPS (BCR) (7545/56) (PL 18.6B)
- HVPS (Dev) (7545/56) (PL 5.3)
- HVPS (1st/2nd/DTC) (PL 6.2)
- MCU PWB (7525/30/35) (PL 18.2A)
- MCU PWB (7545/56) (PL 18.2B)

Go to the appropriate RAP

392-678 ADC Mini Setup Fault [K]

BSD-ON:BSD 9.27 ADC and Environment Sensing

The difference in densities among the ADC patches of K color is abnormal. (This is a hidden failure.
Data is only recorded in history.)

NOTE: *When turning the power OFF, turn OFF the Power Switch first and then the Main Power Switch.*

Procedure

Enter DC122 Fail History. Check whether ADC Sensor Fail or ATC Fail [K] has occurred.

Has Fail 392-651 or 392-315 occurred?

Y **N**

Turn the power OFF and check the following:

- The Drum (K) for contamination
- The 1st BTR (K) for contamination
- The Transfer Belt for contamination
- The connection and board springs between the HVPS (1st/2nd/DTC) and the 1st BTR (K) for open circuits, short circuits, and poor contacts

(7525/30/35)

- The connection and board springs between the HVPS (Dev/BCR) and the BCR (K) for open circuits, short circuits, and poor contacts
- The connection and board springs between the HVPS (Dev/BCR) and the Magnet Roll (K) for open circuits, short circuits, and poor contacts

(7545/56)

- The connection and board springs between the HVPS (BCR) and the BCR (K) for open circuits, short circuits, and poor contacts
- The connection and board springs between the HVPS (Dev) and the Magnet Roll (K) for open circuits, short circuits, and poor contacts

If no problems are found, replace the following parts in sequence:

- Drum (K) (PL 8.1)
- HVPS (Dev/BCR) (7525/30/35) (PL 18.6A)
- HVPS (BCR) (7545/56) (PL 18.6B)
- HVPS (Dev) (7545/56) (PL 5.3)
- HVPS (1st/2nd/DTC) (PL 6.2)
- MCU PWB (7525/30/35) (PL 18.2A)
- MCU PWB (7545/56) (PL 18.2B)

Go to the appropriate RAP

393-314 Y Disp Motor Fault

BSD-ON:BSD 9.23 Toner Cartridge Life Control (Y,M)

Regardless of low usage of toner from Y Toner Cartridge, it was detected to be empty.

NOTE: *•If the failure occurs when printing high density images, check whether the Developer Unit Rotating Shutter is completely open. If the Rotating Shutter is not completely open, it might cause the supplied toner to be insufficient, resulting in this failure.*

- *When turning the power OFF, turn OFF the Power Switch first and then the Main Power Switch.*

Cause/Action

1. Turn the power OFF and ON.
2. Replace the Toner Cartridge (Y) (PL 5.1).

   If the problem persists, check the following:
   - The connectors of the MCU PWB P411 and the Toner CRUM Coupler (Y) J120 for damage, foreign substances, bent connector pins, burns, and improper soldering on the PWB
   - The connection between the MCU PWB J411 and the Toner CRUM Coupler (Y) J120 for open circuit, short circuit, and poor contact
   - The Toner Dispense Motor (Y): DC330 [093-002] (PL 5.1)
   - The drive transmission path in the Dispense Assembly
   - The MCU PWB for failure
     - 7525/30/35 (PL 18.2A)
     - 7545/56 (PL 18.2B)

393-315 M Disp Motor Fault

BSD-ON:BSD 9.23 Toner Cartridge Life Control (Y,M)

Regardless of low usage of toner from M Toner Cartridge, it was detected to be empty.

NOTE: *•If the failure occurs when printing high density images, check whether the Developer Unit Rotating Shutter is completely open. If the Rotating Shutter is not completely open, it might cause the supplied toner to be insufficient, resulting in this failure.*

- *When turning the power OFF, turn OFF the Power Switch first and then the Main Power Switch.*

Cause/Action

1. Turn the power OFF and ON.
2. Replace the Toner Cartridge (M) (PL 5.1).

   If the problem persists, check the following:
   - The connectors of the MCU PWB P411 and the Toner CRUM Coupler (M) J121 for damage, foreign substances, bent connector pins, burns, and improper soldering on the PWB
   - The connection between the MCU PWB J411 and the Toner CRUM Coupler (M) J121 for open circuit, short circuit, and poor contact
   - The Toner Dispense Motor (M): DC330 [093-007] (PL 5.1)
   - The drive transmission path in the Dispense Assembly
   - The MCU PWB for failure
     - 7525/30/35 (PL 18.2A)
     - 7545/56 (PL 18.2B)

393-316 C Disp Motor Fault

BSD-ON:BSD 9.24 Toner Cartridge Life Control (C,K)

Regardless of low usage of toner from C Toner Cartridge, it was detected to be empty.

NOTE: *•If the failure occurs when printing high density images, check whether the Developer Unit Rotating Shutter is completely open. If the Rotating Shutter is not completely open, it might cause the supplied toner to be insufficient, resulting in this failure.*

- *When turning the power OFF, turn OFF the Power Switch first and then the Main Power Switch.*

Cause/Action

1. Turn the power OFF and ON.
2. Replace the Toner Cartridge (C) (PL 5.1).

   If the problem persists, check the following:
   - The connectors of the MCU PWB P411 and the Toner CRUM Coupler (C) J122 for damage, foreign substances, bent connector pins, burns, and improper soldering on the PWB
   - The connection between the MCU PWB J411 and the Toner CRUM Coupler (C) J122 for open circuit, short circuit, and poor contact
   - The Toner Dispense Motor (C): DC330 [093-012] (PL 5.1)
   - The drive transmission path in the Dispense Assembly
   - The MCU PWB for failure
     - 7525/30/35 (PL 18.2A)
     - 7545/56 (PL 18.2B)

393-317 K Disp Motor Fault

BSD-ON:BSD 9.24 Toner Cartridge Life Control (C,K)

Regardless of low usage of toner from K Toner Cartridge, it was detected to be empty.

NOTE: *•If the failure occurs when printing high density images, check whether the Developer Unit Rotating Shutter is completely open. If the Rotating Shutter is not completely open, it might cause the supplied toner to be insufficient, resulting in this failure.*

- *When turning the power OFF, turn OFF the Power Switch first and then the Main Power Switch.*

Cause/Action

1. Turn the power OFF and ON.
2. Replace the Toner Cartridge (K) (PL 5.1).

   If the problem persists, check the following:
   - The connectors of the MCU PWB P411 and the Toner CRUM Coupler (K) J123 for damage, foreign substances, bent connector pins, burns, and improper soldering on the PWB
   - The connection between the MCU PWB J411 and the Toner CRUM Coupler (K) J123 for open circuit, short circuit, and poor contact
   - The Toner Dispense Motor (K): DC330 [093-017] (PL 5.1)
   - The drive transmission path in the Dispense Assembly
   - The MCU PWB for failure
     - 7525/30/35 (PL 18.2A)
     - 7545/56 (PL 18.2B)

393-320 (7545/56) Dev Y, M, C Motor Fault

BSD-ON:BSD 9.3 Developer Drive Control (Y,M,C) (7545,7556)

The Dev Motor (Y, M, C) revolution failure was detected.

NOTE: *When turning the power OFF, turn OFF the Power Switch first and then the Main Power Switch.*

Procedure

Turn the power OFF and remove the Front Cover. Remove the Drum (Y, M, C) and the Developer (Y, M, C) and cheat the Front Cover Interlock Switch.
Turn the power ON and enter the Diag mode. Turn ON DC330 [093-022] (Dev Drive Motor Y, M, C). **Does the Dev Drive Motor (Y, M, C) rotate?**

Y N

Turn the power OFF and remove the Rear Upper Cover. Turn the power ON.
Is the voltage between the MD PWB J526-7 (+) and the GND (-) +24VDC?

Y N

Go to +24VDC Power RAP (7545/56) RAP.

Is the voltage between the MD PWB J527-B16 (+) and the GND (-) +5VDC?

Y N

Go to +5VDC Power RAP.

Turn the power OFF and check the connections between the MD PWB J526 and the Dev Drive Motor (Y, M, C) J251, as well as between the MD PWB J527 and the Dev Drive Motor (Y, M, C) J252 for open circuits, short circuits, and poor contacts.
If no problems are found, replace the following parts in sequence:

- Dev Drive Motor (Y, M, C) (PL 3.3B)
- MD PWB (PL 18.2B)
- MCU PWB (PL 18.2B)

Press the Stop button and turn the power OFF. Install the Drum (Y, M, C), the Developer (Y, M, C), and the Front Cover.
Turn the power ON and enter the Diag mode. Turn ON DC330 [093-022] (Dev Drive Motor Y, M, C). **Does the Dev Drive Motor (Y, M, C) rotate?**

Y N

Check the Developer (Y, M, C) for loading.

Press the Stop button and turn the power OFF. Check the connection between the Dev Drive Motor
(Y, M, C) J252-8 and the MD PWB J527-B9 for open circuit, short circuit, and poor contact.
If no problems are found, replace the following parts in sequence:

- MD PWB (PL 18.2B)
- MCU PWB (PL 18.2B)

393-400 Y Toner Cartridge Near Empty RAP

BSD-ON:BSD 9.23 Toner Cartridge Life Control (Y,M)

It was detected that the replacement timing for Toner Cartridge (Y) is closer than Pre Near.

Procedure

The Toner Cartridge (Y) needs to be replaced soon. Replace the Toner Cartridge (Y) (PL 5.1) as required.

393-423 M Toner Cartridge Near Empty RAP

BSD-ON:BSD 9.23 Toner Cartridge Life Control (Y,M)

It was detected that the replacement timing for Toner Cartridge (M) is closer than Pre Near.

Procedure

The Toner Cartridge (M) needs to be replaced soon. Replace the Toner Cartridge (M) (PL 5.1) as required.

393-424 C Toner Cartridge Near Empty RAP

BSD-ON:BSD 9.24 Toner Cartridge Life Control (C,K)

It was detected that the replacement timing for Toner Cartridge (C) is closer than Pre Near.

Procedure

The Toner Cartridge (C) needs to be replaced soon. Replace the Toner Cartridge (C) (PL 5.1) as required.

393-425 K Toner Cartridge Near Empty RAP

BSD-ON:BSD 9.24 Toner Cartridge Life Control (C,K)

It was detected that the replacement timing for Toner Cartridge (K) is closer than Pre Near.

Procedure

The Toner Cartridge (K) needs to be replaced soon. Replace the Toner Cartridge (K) (PL 5.1) as required.

393-912 K Toner Cartridge Empty

BSD-ON: BSD 9.24 Toner Cartridge Life Control (C,K)

The K Toner Cartridge Empty state was detected.

Cause/Action

Replace the Toner Cartridge (K) (PL 5.1). No special action necessary.

393-924 Toner K CRUM Communication Fault

BSD-ON: BSD 9.24 Toner Cartridge Life Control (C,K)

Communication failure with Toner CRUM (K) was detected.

NOTE: *When turning the power OFF, turn OFF the Power Switch first and then the Main Power Switch.*

Cause/Action

1. Turn the power OFF and ON.
2. Check the connection between the MCU PWB J411 and the Toner CRUM Coupler Assembly (K) J123 for open circuit, short circuit, and poor contact. Also, remove and reinstall the Toner Cartridge (K) and check for improper installation.

   If no problems are found, replace the following parts in sequence:
   - Toner Cartridge (K) (PL 5.1)
   - Toner CRUM Coupler Assembly (K) (PL 5.1)
   - MCU PWB (7525/30/35) (PL 18.2A)
   - MCU PWB (7545/56) (PL 18.2B)
   - Go to 393-926 Toner K CRUM Data Mismatch Fault

393-925 Toner K CRUM Data Broken Fault

BSD-ON: BSD 9.24 Toner Cartridge Life Control (C,K)

The system detected that the data written to the Toner CRUM (K) and the data read from the Toner CRUM (K) do not match.

NOTE: *The WC 7556F machine is shipped with "Worldwide Neutral" Toner Cartridges. When the cartridges shipped with the machine are installed, the machine is set to Worldwide Neutral configuration.*

When the first toner cartridge (any color) is replaced in the machine, the Geographic Differentiation Code and Toner Cartridge Type in NVM are automatically changed to the same settings as the replacement cartridge. Once these NVM are set, the toner configuration can only be changed with a CRUM conversion.

One or more Toner Cartridges are of the wrong type (i.e., a "Sold" cartridge installed in a "metered" configured machine.

Initial Actions

Remove and reinstall the Toner Cartridge (K).

Procedure

An Error Message appears on the UI - **Reinsert an improperly seated consumable or replace any consumables with Error. Press Machine Status button and select Supplies tab for details.** Remove and reinstall the Black Toner Cartridge and check for improper installation. **The problem continues**

Y **N**

End

Check the NVM locations in Table 1 .

Table 1 CRUM Data NVM

NVM Location	Name	Values (read-only)
740-053	Geographic Setting	3 = North America/Europe 12 = DMO 15 = Worldwide
740-055	Contract Type	2 = Sold 3 = Metered 31 = Neutral

The NVM values match the expected customer configuration.

Y **N**

Determine correct Contract Type from customer. Contact Technical Support Center or your NTS for the CRUM conversion procedure.

1. Polish the connection terminals between the Toner Cartridge (K) CRUM PWB and the Toner CRUM Coupler Assembly (K) CRUM with dry cloth. (When cleaning, do not use Drum cleaner, etc.)
2. Check the following:

- The connection between the MCU PWB J411 and the Toner CRUM Coupler Assembly (K) P/J123 for open circuit, short circuit, and poor contact
- The connection terminals between the Toner Cartridge (K) CRUM PWB and the Toner CRUM Coupler Assembly (K) CRUM for damage and foreign substances
- The Toner Cartridge (K) for improper installation

If no problems are found, replace the following parts in sequence:

- Toner Cartridge (M) (PL 5.1)
- Toner CRUM Coupler Assembly (M) (PL 5.1)
- MCU PWB (7525/30/35) (PL 18.2A)
- MCU PWB (7545/56) (PL 18.2B)

393-926 Toner K CRUM Data Mismatch Fault

BSD-ON:BSD 9.24 Toner Cartridge Life Control (C,K)

Incorrect authentication area data was detected in the Black Toner CRUM. This fault is displayed if the wrong type of Toner cartridge is installed.

NOTE: *The WC 7556F machine is shipped with "Worldwide Neutral" Toner Cartridges. When the cartridges shipped with the machine are installed, the machine is set to Worldwide Neutral configuration.*

When the first toner cartridge (any color) is replaced in the machine, the Geographic Differentiation Code and Toner Cartridge Type in NVM are automatically changed to the same settings as the replacement cartridge. Once these NVM are set, the toner configuration can only be changed with a CRUM conversion.

One or more Toner Cartridges are of the wrong type (i.e., a "Sold" cartridge installed in a "metered" configured machine.

Initial Actions

Remove and reinstall the Toner Cartridge (K).

Procedure

An Error Message appears on the UI - **Reinsert an improperly seated consumable or replace any consumables with Error. Press Machine Status button and select Supplies tab for details.** Remove and reinstall the Black Toner Cartridge and check for improper installation. **The problem continues**

Y **N**
End

Check the NVM locations in Table 1 .

Table 1 CRUM Data NVM

NVM Location	Name	Values (read-only)
740-053	Geographic Setting	3 = North America/Europe 12 = DMO 15 = Worldwide
740-055	Contract Type	2 = Sold 3 = Metered 31 = Neutral

The NVM values match the expected customer configuration.

Y **N**
Go to GP 16

1. Polish the connection terminals between the Toner Cartridge (K) CRUM PWB and the Toner CRUM Coupler Assembly (K) CRUM with dry cloth. (When cleaning, do not use Drum cleaner, etc.)
2. Check the following:
   - The connection between the MCU PWB J411 and the Toner CRUM Coupler Assembly (K) P/J123 for open circuit, short circuit, and poor contact

- The connection terminals between the Toner Cartridge (K) CRUM PWB and the Toner CRUM Coupler Assembly (K) CRUM for damage and foreign substances
- The Toner Cartridge (K) for improper installation

If no problems are found, replace the following parts in sequence:

- Toner Cartridge (M) (PL 5.1)
- Toner CRUM Coupler Assembly (M) (PL 5.1)
- MCU PWB (7525/30/35) (PL 18.2A)
- MCU PWB (7545/56) (PL 18.2B)

393-927 Toner Y CRUM Communication Fault

BSD-ON:BSD 9.23 Toner Cartridge Life Control (Y,M)

Communication failure with Toner CRUM (Y) was detected.

NOTE: *When turning the power OFF, turn OFF the Power Switch first and then the Main Power Switch.*

Cause/Action

1. Turn the power OFF and ON.
2. Check the connection between the MCU PWB J411 and the Toner CRUM Coupler Assembly (Y) J120 for open circuit, short circuit, and poor contact. Also, remove and reinstall the Toner Cartridge (Y) and check for improper installation.

   If no problems are found, replace the following parts in sequence:

   - Toner Cartridge (Y) (PL 5.1)
   - Toner CRUM Coupler Assembly (Y) (PL 5.1)
   - MCU PWB (7525/30/35) (PL 18.2A)
   - MCU PWB (7545/56) (PL 18.2B)
   - Go to 393-937 Toner Y CRUM Data Mismatch Fault

393-928 Toner M CRUM Communication Fault

BSD-ON:BSD 9.23 Toner Cartridge Life Control (Y,M)

Communication failure with Toner CRUM (M) was detected.

NOTE: *When turning the power OFF, turn OFF the Power Switch first and then the Main Power Switch.*

Cause/Action

1. Turn the power OFF and ON.
2. Check the connection between the MCU PWB J411 and the Toner CRUM Coupler Assembly (M) J121 for open circuit, short circuit, and poor contact. Also, remove and reinstall the Toner Cartridge (M) and check for improper installation.

   If no problems are found, replace the following parts in sequence:
   - Toner Cartridge (M) (PL 5.1)
   - Toner CRUM Coupler Assembly (M) (PL 5.1)
   - MCU PWB (7525/30/35) (PL 18.2A)
   - MCU PWB (7545/56) (PL 18.2B)
   - Go to 393-938 Toner M CRUM Data Mismatch Fault

393-929 Toner C CRUM Communication Fault

BSD-ON: BSD 9.24 Toner Cartridge Life Control (C,K)

Communication failure with Toner CRUM (C) was detected.

NOTE: *When turning the power OFF, turn OFF the Power Switch first and then the Main Power Switch.*

Cause/Action

1. Turn the power OFF and ON.
2. Check the connection between the MCU PWB J411 and the Toner CRUM Coupler Assembly (C) J122 for open circuit, short circuit, and poor contact. Also, remove and reinstall the Toner Cartridge (C) and check for improper installation.

   If no problems are found, replace the following parts in sequence:
   - Toner Cartridge (C) (PL 5.1)
   - Toner CRUM Coupler Assembly (C) (PL 5.1)
   - MCU PWB (7525/30/35) (PL 18.2A)
   - MCU PWB (7545/56) (PL 18.2B)
   - Go to 393-939 Toner C CRUM Data Mismatch Fault

393-933 Toner Y CRUM Data Broken Fault

BSD-ON: BSD 9.23 Toner Cartridge Life Control (Y,M)

The system detected that the data written to the Toner CRUM (Y) and the data read from the Toner CRUM (Y) do not match.

NOTE: *The WC 7556F machine is shipped with "Worldwide Neutral" Toner Cartridges. When the cartridges shipped with the machine are installed, the machine is set to Worldwide Neutral configuration.*

When the first toner cartridge (any color) is replaced in the machine, the Geographic Differentiation Code and Toner Cartridge Type in NVM are automatically changed to the same settings as the replacement cartridge. Once these NVM are set, the machine toner configuration can only be changed with a CRUM conversion.

One or more Toner Cartridges are of the wrong type (i.e., a "Sold" cartridge installed in a "metered" configured machine.

Cause/Action

Remove and reinstall the Toner Cartridge (Y) and check for improper installation. If no problems are found, replace the Toner Cartridge (Y) (PL 5.1).

Go to 393-937 Toner Y CRUM Data Mismatch Fault.

393-934 Toner M CRUM Data Broken Fault

BSD-ON: BSD 9.23 Toner Cartridge Life Control (Y,M)

The system detected that the data written to the Toner CRUM (M) and the data read from the Toner CRUM (M) do not match.

NOTE: *The WC 7556F machine is shipped with "Worldwide Neutral" Toner Cartridges. When the cartridges shipped with the machine are installed, the machine is set to Worldwide Neutral configuration.*

When the first toner cartridge (any color) is replaced in the machine, the Geographic Differentiation Code and Toner Cartridge Type in NVM are automatically changed to the same settings as the replacement cartridge. Once these NVM are set, the machine toner configuration can only be changed with a CRUM conversion.

One or more Toner Cartridges are of the wrong type (i.e., a "Sold" cartridge installed in a "metered" configured machine.

Cause/Action

Remove and reinstall the Toner Cartridge (M) and check for improper installation. If no problems are found, replace the Toner Cartridge (M) (PL 5.1).

Go to 393-938 Toner M CRUM Data Mismatch Fault

393-935 Toner C CRUM Data Broken Fault

BSD-ON:BSD 9.24 Toner Cartridge Life Control (C,K)

The system detected that the data written to the Toner CRUM (C) and the data read from the Toner CRUM (C) do not match.

NOTE: *The WC 7556F machine is shipped with "Worldwide Neutral" Toner Cartridges. When the cartridges shipped with the machine are installed, the machine is set to Worldwide Neutral configuration.*

When the first toner cartridge (any color) is replaced in the machine, the Geographic Differentiation Code and Toner Cartridge Type in NVM are automatically changed to the same settings as the replacement cartridge. Once these NVM are set, the machine toner configuration can only be changed with a CRUM conversion.

One or more Toner Cartridges are of the wrong type (i.e., a "Sold" cartridge installed in a "metered" configured machine.

Cause/Action

Remove and reinstall the Toner Cartridge (C) and check for improper installation. If no problems are found, replace the Toner Cartridge (C) (PL 5.1).

Go to 393-939 Toner C CRUM Data Mismatch Fault

393-937 Toner Y CRUM Data Mismatch Fault

BSD-ON:BSD 9.23 Toner Cartridge Life Control (Y,M)

Incorrect authentication area data was detected in the Yellow Toner CRUM. This fault is displayed if the wrong type of Toner cartridge is installed.

NOTE: *The WC 7556F machine is shipped with "Worldwide Neutral" Toner Cartridges. When the cartridges shipped with the machine are installed, the machine is set to Worldwide Neutral configuration.*

When the first toner cartridge (any color) is replaced in the machine, the Geographic Differentiation Code and Toner Cartridge Type in NVM are automatically changed to the same settings as the replacement cartridge. Once these NVM are set, the machine toner configuration can only be changed with a CRUM conversion.

One or more Toner Cartridges are of the wrong type (i.e., a "Sold" cartridge installed in a "metered" configured machine.

Initial Actions

Remove and reinstall the Toner Cartridge (Y).

Procedure

An Error Message appears on the UI - **Reinsert an improperly seated consumable or replace any consumables with Error. Press Machine Status button and select Supplies tab for details.** Remove and reinstall the Yellow Toner Cartridge and check for improper installation. **The problem continues**

Y **N**
End

Check the NVM locations in Table 1 .

Table 1 NVM Values

NVM Location	Name	Values (read-only)
740-053	Geographic Setting	3 = North America/Europe 12 = DMO 15 = Worldwide
740-055	Contract Type	2 = Sold 3 = Metered 31 = Neutral

The NVM values match the expected customer configuration.

Y **N**
Go to GP 16

1. Polish the connection terminals between the Toner Cartridge (Y) CRUM PWB and the Toner CRUM Coupler Assembly (Y) CRUM with dry cloth. (When cleaning, do not use Drum cleaner, etc.)
2. Check the following:
   - The connection between the MCU PWB P/J411 and the Toner CRUM Coupler Assembly (Y) P/J120 for open circuit, short circuit, and poor contact

- The connection terminals between the Toner Cartridge (Y) CRUM PWB and the Toner CRUM Coupler Assembly (Y) CRUM for damage and foreign substances
- The Toner Cartridge (Y) for improper installation

If no problems are found, replace the following parts in sequence:

- Toner Cartridge (M) (PL 5.1)
- Toner CRUM Coupler Assembly (M) (PL 5.1)
- MCU PWB (7525/30/35) (PL 18.2A)
- MCU PWB (7545/56) (PL 18.2B)

393-938 Toner M CRUM Data Mismatch Fault

BSD-ON:BSD 9.23 Toner Cartridge Life Control (Y,M)

Incorrect authentication area data was detected in the Magenta Toner CRUM. This fault is displayed if the wrong type of Toner cartridge is installed.

NOTE: *The WC 7556F machine is shipped with "Worldwide Neutral" Toner Cartridges. When the cartridges shipped with the machine are installed, the machine is set to Worldwide Neutral configuration.*

When the first toner cartridge (any color) is replaced in the machine, the Geographic Differentiation Code and Toner Cartridge Type in NVM are automatically changed to the same settings as the replacement cartridge. Once these NVM are set, the machine toner configuration can only be changed with a CRUM conversion.

One or more Toner Cartridges are of the wrong type (i.e., a "Sold" cartridge installed in a "metered" configured machine.

Initial Actions

Remove and reinstall the Toner Cartridge (M).

Procedure

An Error Message appears on the UI - **Reinsert an improperly seated consumable or replace any consumables with Error. Press Machine Status button and select Supplies tab for details.** Remove and reinstall the Magenta Toner Cartridge and check for improper installation. **The problem continues**

Y **N**
End

Check the NVM locations in Table 1 .

Table 1 NVM Values

NVM Location	Name	Values (read-only)
740-053	Geographic Setting	3 = North America/Europe 12 = DMO 15 = Worldwide
740-055	Contract Type	2 = Sold 3 = Metered 31 = Neutral

The NVM values match the expected customer configuration.

Y **N**
Go to GP 16

1. Polish the connection terminals between the Toner Cartridge (M) CRUM PWB and the Toner CRUM Coupler Assembly (M) CRUM with dry cloth. (When cleaning, do not use Drum cleaner, etc.)
2. Check the following:
   - The connection between the MCU PWB P/J411 and the Toner CRUM Coupler Assembly (M) P/J121 for open circuit, short circuit, and poor contact

- The connection terminals between the Toner Cartridge (M) CRUM PWB and the Toner CRUM Coupler Assembly (M) CRUM for damage and foreign substances
- The Toner Cartridge (M) for improper installation

If no problems are found, replace the following parts in sequence:

- Toner Cartridge (M) (PL 5.1)
- Toner CRUM Coupler Assembly (M) (PL 5.1)
- MCU PWB (7525/30/35) (PL 18.2A)
- MCU PWB (7545/56) (PL 18.2B)

393-939 Toner C CRUM Data Mismatch Fault

BSD-ON:BSD 9.24 Toner Cartridge Life Control (C,K)

Incorrect authentication area data was detected in the Cyan Toner CRUM. This fault is displayed if the wrong type of Toner cartridge is installed.

NOTE: *The WC 7556F machine is shipped with "Worldwide Neutral" Toner Cartridges. When the cartridges shipped with the machine are installed, the machine is set to Worldwide Neutral configuration.*

When the first toner cartridge (any color) is replaced in the machine, the Geographic Differentiation Code and Toner Cartridge Type in NVM are automatically changed to the same settings as the replacement cartridge. Once these NVM are set, the machine toner configuration can only be changed with a CRUM conversion.

One or more Toner Cartridges are of the wrong type (i.e., a "Sold" cartridge installed in a "metered" configured machine.

Initial Actions

Remove and reinstall the Toner Cartridge (C).

Procedure

An Error Message appears on the UI - **Reinsert an improperly seated consumable or replace any consumables with Error. Press Machine Status button and select Supplies tab for details**. Remove and reinstall the Cyan Toner Cartridge and check for improper installation. **The problem continues**

Y **N**
End

Check the NVM locations in Table 1 .

Table 1 NVM Values

NVM Location	Name	Values (read-only)
740-053	Geographic Setting	3 = North America/Europe 12 = DMO 15 = Worldwide
740-055	Contract Type	2 = Sold 3 = Metered 31 = Neutral

The NVM values match the expected customer configuration.

Y **N**
Go to GP 16

1. Polish the connection terminals between the Toner Cartridge (C) CRUM PWB and the Toner CRUM Coupler Assembly (C) CRUM with dry cloth. (When cleaning, do not use Drum cleaner, etc.)
2. Check the following:
   - The connection between the MCU PWB P/J411 and the Toner CRUM Coupler Assembly (C) P/J122 for open circuit, short circuit, and poor contact

- The connection terminals between the Toner Cartridge (C) CRUM PWB and the Toner CRUM Coupler Assembly (C) CRUM for damage and foreign substances
- The Toner Cartridge (C) for improper installation

If no problems are found, replace the following parts in sequence:

- Toner Cartridge (M) (PL 5.1)
- Toner CRUM Coupler Assembly (M) (PL 5.1)
- MCU PWB (7525/30/35) (PL 18.2A)
- MCU PWB (7545/56) (PL 18.2B)

393-970 Toner Y CRUM Not In Position

BSD-ON: BSD 9.23 Toner Cartridge Life Control (Y,M)

BSD-ON: BSD 9.25 Toner Dispense Control (Y,M)

The Toner CRUM (Y) is not in the proper position.

NOTE: *When turning the power OFF, turn OFF the Power Switch first and then the Main Power Switch.*

NOTE: *The WC 7556F machine is shipped with "Worldwide Neutral" Toner Cartridges. When the cartridges shipped with the machine are installed, the machine is set to Worldwide Neutral configuration.*

When the first toner cartridge (any color) is replaced in the machine, the Geographic Differentiation Code and Toner Cartridge Type in NVM are automatically changed to the same settings as the replacement cartridge. Once these NVM are set, the machine toner configuration can only be changed with a CRUM conversion.

One or more Toner Cartridges are of the wrong type (i.e., a "Sold" cartridge installed in a "metered" configured machine.

Cause/Action

1. Remove and reinstall the Toner Cartridge (Y).
2. Polish the connection terminals between the Toner Cartridge (Y) CRUM PWB and the Toner CRUM Coupler Assembly (Y) CRUM with dry cloth. (When cleaning, do not use Drum cleaner, etc.)
3. Check the following:
   - The connection between the MD PWB J529 and the Toner Dispense Motor J220 for damaged wiring or connectors
   - The connection between the MCU PWB J411 and the Toner CRUM Coupler Assembly (Y) J120 for open circuit, short circuit, and poor contact
   - The connection terminals between the Toner Cartridge (Y) CRUM PWB and the Toner CRUM Coupler Assembly (Y) CRUM for damage and foreign substances
   - The Toner Cartridge (Y) for improper installation

   If no problems are found, replace the following parts in sequence:
   - Toner Cartridge (Y) (PL 5.1)
   - Toner CRUM Coupler Assembly (Y) (PL 5.1)
   - MD PWB (7525/30/35) (PL 18.2A)
   - MD PWB (7545/56) (PL 18.2B)
   - MCU PWB (7525/30/35) (PL 18.2A)
   - MCU PWB (7545/56) (PL 18.2B)
   - Go to 393-937 Toner Y CRUM Data Mismatch Fault

393-971 Toner M CRUM Not In Position

BSD-ON:BSD 9.23 Toner Cartridge Life Control (Y,M)

BSD-ON:BSD 9.25 Toner Dispense Control (Y,M)

The Toner CRUM (M) is not in the proper position.

NOTE: *When turning the power OFF, turn OFF the Power Switch first and then the Main Power Switch.*

NOTE: *The WC 7556F machine is shipped with "Worldwide Neutral" Toner Cartridges. When the cartridges shipped with the machine are installed, the machine is set to Worldwide Neutral configuration.*

When the first toner cartridge (any color) is replaced in the machine, the Geographic Differentiation Code and Toner Cartridge Type in NVM are automatically changed to the same settings as the replacement cartridge. Once these NVM are set, the machine toner configuration can only be changed with a CRUM conversion.

One or more Toner Cartridges are of the wrong type (i.e., a "Sold" cartridge installed in a "metered" configured machine.

Cause/Action

1. Remove and reinstall the Toner Cartridge (M).
2. Polish the connection terminals between the Toner Cartridge (M) CRUM PWB and the Toner CRUM Coupler Assembly (M) CRUM with dry cloth. (When cleaning, do not use Drum cleaner, etc.)
3. Check the following:
   - The connection between the MD PWB J529 and the Toner Dispense Motor J221 for damaged wiring or connectors
   - The connection between the MCU PWB J411 and the Toner CRUM Coupler Assembly (M) J121 for open circuit, short circuit, and poor contact
   - The connection terminals between the Toner Cartridge (M) CRUM PWB and the Toner CRUM Coupler Assembly (M) CRUM for damage and foreign substances
   - The Toner Cartridge (M) for improper installation

   If no problems are found, replace the following parts in sequence:
   - Toner Cartridge (M) (PL 5.1)
   - Toner CRUM Coupler Assembly (M) (PL 5.1)
   - MD PWB (7525/30/35) (PL 18.2A)
   - MD PWB (7545/56) (PL 18.2B)
   - MCU PWB (7525/30/35) (PL 18.2A)
   - MCU PWB (7545/56) (PL 18.2B)
   - Go to 393-938 Toner M CRUM Data Mismatch Fault

393-972 Toner C CRUM Not In Position

BSD-ON:BSD 9.24 Toner Cartridge Life Control (C,K)

BSD-ON:BSD 9.26 Toner Dispense Control (C,K)

The Toner CRUM (C) is not in the proper position.

NOTE: *When turning the power OFF, turn OFF the Power Switch first and then the Main Power Switch.*

NOTE: *The WC 7556F machine is shipped with "Worldwide Neutral" Toner Cartridges. When the cartridges shipped with the machine are installed, the machine is set to Worldwide Neutral configuration.*

When the first toner cartridge (any color) is replaced in the machine, the Geographic Differentiation Code and Toner Cartridge Type in NVM are automatically changed to the same settings as the replacement cartridge. Once these NVM are set, the machine toner configuration can only be changed with a CRUM conversion.

One or more Toner Cartridges are of the wrong type (i.e., a "Sold" cartridge installed in a "metered" configured machine.

Cause/Action

1. Remove and reinstall the Toner Cartridge (C).
2. Polish the connection terminals between the Toner Cartridge (C) CRUM PWB and the Toner CRUM Coupler Assembly (C) CRUM with dry cloth. (When cleaning, do not use Drum cleaner, etc.)
3. Check the following:
   - The connection between the MD PWB J529 and the Toner Dispense Motor J222 for damaged wiring or connectors
   - The connection between the MCU PWB J411 and the Toner CRUM Coupler Assembly (C) J122 for open circuit, short circuit, and poor contact
   - The connection terminals between the Toner Cartridge (C) CRUM PWB and the Toner CRUM Coupler Assembly (C) CRUM for damage and foreign substances
   - The Toner Cartridge (C) for improper installation

   If no problems are found, replace the following parts in sequence:
   - Toner Cartridge (C) (PL 5.1)
   - Toner CRUM Coupler Assembly (C) (PL 5.1)
   - MD PWB (7525/30/35) (PL 18.2A)
   - MD PWB (7545/56) (PL 18.2B)
   - MCU PWB (7525/30/35) (PL 18.2A)
   - MCU PWB (7545/56) (PL 18.2B)
   - Go to 393-939 Toner C CRUM Data Mismatch Fault

393-973 Toner K CRUM Not In Position

BSD-ON: BSD 9.24 Toner Cartridge Life Control (C,K)

BSD-ON:BSD 9.26 Toner Dispense Control (C,K)

The Toner CRUM (K) is not in the proper position.

NOTE: *When turning the power OFF, turn OFF the Power Switch first and then the Main Power Switch.*

NOTE: *The WC 7556F machine is shipped with "Worldwide Neutral" Toner Cartridges. When the cartridges shipped with the machine are installed, the machine is set to Worldwide Neutral configuration.*

When the first toner cartridge (any color) is replaced in the machine, the Geographic Differentiation Code and Toner Cartridge Type in NVM are automatically changed to the same settings as the replacement cartridge. Once these NVM are set, the machine toner configuration can only be changed with a CRUM conversion.

One or more Toner Cartridges are of the wrong type (i.e., a "Sold" cartridge installed in a "metered" configured machine.

Cause/Action

1. Remove and reinstall the Toner Cartridge (K).
2. Polish the connection terminals between the Toner Cartridge (K) CRUM PWB and the Toner CRUM Coupler Assembly (K) CRUM with dry cloth. (When cleaning, do not use Drum cleaner, etc.)
3. Check the following:
   - The connection between the MD PWB J529 and the Toner Dispense Motor J223 for damaged wiring or connectors
   - The connection between the MCU PWB J411 and the Toner CRUM Coupler Assembly (K) J123 for open circuit, short circuit, and poor contact
   - The connection terminals between the Toner Cartridge (K) CRUM PWB and the Toner CRUM Coupler Assembly (K) CRUM for damage and foreign substances
   - The Toner Cartridge (K) for improper installation

   If no problems are found, replace the following parts in sequence:
   - Toner Cartridge (K) (PL 5.1)
   - Toner CRUM Coupler Assembly (K) (PL 5.1)
   - MD PWB (7525/30/35) (PL 18.2A)
   - MD PWB (7545/56) (PL 18.2B)
   - MCU PWB (7525/30/35) (PL 18.2A)
   - MCU PWB (7545/56) (PL 18.2B)
   - Go to 393-926 Toner K CRUM Data Mismatch Fault.

394-120 1st BTR Contact/Retract Fault

BSD-ON:BSD 9.29 1st BTR Contact Retract Control

After the 1st BTR Contact/Retract operation has started, it does not complete within the specified time.

NOTE: *When turning the power OFF, turn OFF the Power Switch first and then the Main Power Switch.*

Procedure

Remove the 1st BTR Contact Retract Sensor Bracket. Turn the power ON and enter the Diag mode.
Turn ON DC330 [094-200]. Use a sheet of paper, etc. to block/clear the light path to the 1st BTR Contact Retract Sensor.
Does the display change between High/Low?

Y **N**

Use OF 99-2 Transmissive Sensor RAP to fix the 1st BTR Contact Retract Sensor.

Press the Stop button and turn the power OFF. Install the 1st BTR Contact Retract Sensor Bracket.
Turn the power ON and enter the Diag mode. Turn ON DC330 [094-012] (Contact) and DC330 [094-013] (Retract) alternately. **Does it contact/retract?**

Y **N**

Remove the IBT and check the following:

- The IBT Assembly for mechanical loading or damage
- The 1st BTR Contact Retract Gear for wear, damage, and operation failure
- The 1st BTR Contact Retract Clutch for improper installation
- The 1st BTR Contact Retract Sensor for improper installation
- The connection between the 1st BTR Contact Retract Clutch J250 and the MCU PWB J417 for open circuit, short circuit, and poor contact

If no problems are found, replace the 1st BTR Contact Retract Clutch (PL 3.2).

Press the Stop button and turn the power OFF.
Replace the MCU PWB.

- MCU PWB (7525/7530/7535) (PL 18.2A)
- MCU PWB (7545/7556) (PL 18.2B)

394-300 IBT Front Cover Open

BSD-ON:BSD 1.10 Power Interlock Switching (1 of 2)

The Front Cover Open was detected by the IBT Front Cover Switch.

NOTE: *When turning the power OFF, turn OFF the Power Switch first and then the Main Power Switch.*

Cause/Action

Check the following:

- The Front Cover for damage or mismatch.
- The IBT Front Cover Switch for failure: DC330 [077-307] (PL 18.5)
- The connection between the IBT Front Cover Switch J272 and the MCU PWB J416 for open circuit, short circuit, and poor contact

If no problems are found, replace the MCU PWB.

- MCU PWB (7525/30/35) (PL 18.2A)
- MCU PWB (7545/56) (PL 18.2B).

394-325 2nd BTR Contact/Retract Fault

BSD-ON:BSD 9.34 2nd BTR Contact Retract Control

After the 2nd BTR Contact/Retract operation has started, it does not complete within the specified time.

NOTE: *When turning the power OFF, turn OFF the Power Switch first and then the Main Power Switch.*

Procedure

Turn the power ON and enter the Diag mode. Turn ON DC330 [094-201]. Move the Shielding Board of the 2nd BTR Contact Retract Sensor manually to block/clear the light path to the 2nd BTR Contact Retract Sensor. **Does the display change between High/Low?**

Y **N**

Use OF 99-2 Transmissive Sensor RAP to fix the 2nd BTR Contact Retract Sensor.

Press the Stop button. Turn ON DC330 [094-003] (Contact) and DC330[094-004] (Retract) alternately. **Does it contact/retract?**

Y **N**

Remove the IBT and check the following:

- The 2nd BTR Contact Retract Gear for wear, damage, and revolution failure
- The 2nd BTR Contact Retract Motor for improper installation
- The 2nd BTR Contact Retract Sensor for improper installation
- The connection between the 2nd BTR Contact Retract Motor J280 and the MD PWB J523 for open circuit, short circuit, and poor contact

If no problems are found, replace the 2nd BTR Contact Retract Motor (PL 14.4).

Press the Stop button and turn the power OFF.
Replace the following parts in sequence:

- MD PWB (7525/30/35) (PL 18.2A)
- MD PWB (7545/56) (PL 18.2B)
- MCU PWB (7525/30/35) (PL 18.2A)
- MCU PWB (7545/56) (PL 18.2B)

394-417 IBT Unit Near End Warning

BSD-ON:-

The IBT Assembly needs to be replaced soon.

NOTE: *When turning the power OFF, turn OFF the Power Switch first and then the Main Power Switch.*

Cause/Action

Replace the IBT Assembly and clear DC135 [954-820] (IBT Unit).

394-418 IBT CLN Unit Near End Warning

BSD-ON:-

The IBT Cleaner needs to be replaced soon.

NOTE: *When turning the power OFF, turn OFF the Power Switch first and then the Main Power Switch.*

Cause/Action

Replace the IBT Cleaner and clear DC135 [954-822] (IBT CLN Unit).

394-419 2nd BTR Unit Near End Warning

BSD-ON:-

The 2nd BTR needs to be replaced soon.

NOTE: *When turning the power OFF, turn OFF the Power Switch first and then the Main Power Switch.*

Cause/Action

Replace the 2nd BTR and clear DC135[954-821] (2nd BTR Unit).

394-420 IBT Unit End Warning

BSD-ON:-

The IBT Assembly must be replaced.

NOTE: *When turning the power OFF, turn OFF the Power Switch first and then the Main Power Switch.*

Cause/Action

Replace the IBT Assembly and clear DC135 [954-820] (IBT Unit).

394-421 IBT CLN Unit End Warning

BSD-ON:-

The IBT Cleaner must be replaced.

NOTE: *When turning the power OFF, turn OFF the Power Switch first and then the Main Power Switch.*

Cause/Action

Replace the IBT Cleaner and clear DC135 [954-822] (IBT CLN Unit).

394-422 2nd BTR Unit End Warning

BSD-ON:-

The 2nd BTR must be replaced.

NOTE: *When turning the power OFF, turn OFF the Power Switch first and then the Main Power Switch.*

Cause/Action

Replace the 2nd BTR and clear DC135[954-821] (2nd BTR Unit).

AC Power RAP

NOTE: *When turning the power OFF, turn OFF the Power Switch first and then the Main Power Switch.*

Initial Actions

If the GFI Breaker is tripped, reset the Breaker. If the Breaker trips again, check the AC circuit for a short circuit.

Procedure

Plug in the Power Cord. **AC line voltage is measured between the GFI Breaker J10 and J11.**

Y N

Unplug the Power Cord from the outlet. AC line voltage is measured at the outlet.

Y N

Check the customer's Breaker

Check the Power Cord for open circuit and poor contact. If no problems are found, replace the GFI (PL 18.4).

Turn the main power ON (turn ON the Main Power Switch). **AC line voltage is measured between the Main LVPS J4-1 and J4-3.**

Y N

Is the voltage between the Main Power Switch J12 and J15 equal to line voltage ?

Y N

Is the voltage between the Main Power Switch J13 and J14 equal to line voltage?

Y N

Unplug the Power Cord and disconnect J4 on the Main LVPS. Check the following circuits for open circuits and poor contacts.

- Between Main Power Switch J13 and Main LVPS J4-4
- Between Main Power Switch J14 and Main LVPS J4-6

If no problems are found, replace the Main LVPS (PL 18.5).

Replace the Main Power Switch (PL 18.5).

Unplug the Power Cord and disconnect J4 on the Main LVPS. Check the following circuits for open circuits and poor contacts.

- Between Main Power Switch J12 and Main LVPS J4-1
- Between Main Power Switch J15 and Main LVPS J4-3

Check the AC circuit to each component by referring to Chapter 7 Wiring Data.

STBY +5VDC Power RAP

NOTE: *When turning the power OFF, turn OFF the Power Switch first and then the Main Power Switch.*

Procedure

Turn the power ON (turn ON the Main Power Switch then turn ON the Power Switch).

Are the voltages between the Main LVPS J501-1/2/3 (+) and the GND (-) +5V?

Y N

Is the voltage between the Main LVPS J4-1 and J4-3 equal to line voltage?

Y N

Go to the AC Power RAP.

Turn the power OFF and disconnect the Main LVPS J501 and J502. Turn ON the machine 15sec later. **Are the voltages between the Main LVPS J501-1/2/3 (+) and the GND (-) +5V?**

Y N

Replace the Main LVPS (PL 18.5).

Check the +5VDC circuit for a short circuit in the Frame by referring to Chapter 7 Wiring Data.

Is the voltage between the Main LVPS J502-1 (+) and the GND (-) +5VDC?

Y N

Replace the Main LVPS (PL 18.5).

Check the wire to the applicable component for an open circuit or poor contact by referring to Chapter 7 Wiring Data.

+5VDC Power RAP

NOTE: *When turning the power OFF, turn OFF the Power Switch first and then the Main Power Switch.*

Procedure

Turn the power ON (turn ON the Main Power Switch then turn ON the Power Switch).

Are the voltages between the Main LVPS J501-4/5 (+) and the GND (-) +5V?

Y N

Is the voltage between the Main LVPS J4-1 and J4-3 100VAC?

Y N

Go to AC Power RAP.

Turn the power OFF and disconnect the Main LVPS J501 and J510. Turn ON the machine 15sec later. **Are the voltages between the Main LVPS J501-4/5 (+) and the GND (-) +5V?**

Y N

Replace the Main LVPS (PL 18.5).

Check the +5VDC circuit for a short circuit in the Frame by referring to Chapter 7 Wiring Data.

Are the voltages between the Main LVPS J510-1/2 (+) and the GND (-) +5V?

Y N

Replace the Main LVPS (PL 18.5).

Check the wire to the applicable component for an open circuit or poor contact by referring to Chapter 7 Wiring Data.

+24VDC Power RAP (7525/30/35)

NOTE: *When turning the power OFF, turn OFF the Power Switch first and then the Main Power Switch.*

Procedure

Turn the power ON (turn ON the Main Power Switch then turn ON the Power Switch).

Is the voltage between the Main LVPS J501-6 (+) and the GND (-) +24VDC?

Y N

Is the voltage between the Main LVPS J4-1 and J4-3 100VAC?

Y N

Go to AC Power RAP.

Turn the power OFF and disconnect the Main LVPS J501, J502, and J510. Turn ON the machine 15sec later. **Is the voltage between the Main LVPS J501-6 (+) and the GND (-) +24VDC?**

Y N

Replace the Main LVPS (PL 18.5).

Check the +24VDC circuit for a short circuit in the Frame by referring to Chapter 7 Wiring Data.

Is the voltage between the Main LVPS J502-2 (+) and the GND (-) +24VDC?

Y N

Replace the Main LVPS (PL 18.5).

Is the voltage between the Main LVPS J510-3 (+) and the GND (-) +24VDC?

Y N

Replace the Main LVPS (PL 18.5).

Check the wire to the applicable component for an open circuit or poor contact by referring to Chapter 7 Wiring Data.

+24VDC Power RAP (7545/56)

NOTE: *When turning the power OFF, turn OFF the Power Switch first and then the Main Power Switch.*

Procedure

Turn the power ON (turn ON the Main Power Switch then turn ON the Power Switch).

Is the voltage between the Main LVPS J510-3 (+) (BSD 1.6) and the GND (-), as well as between the Sub LVPS J504-3 (+) (BSD 1.7) and the GND (-) +24VDC?

Y N

Is the voltage between the Main LVPS J4-1 and J4-3 (BSD 1.2) 100VAC?

Y N

Go to AC Power RAP.

Is the voltage between the Main LVPS J6-2 and J6-4 (BSD 1.2) 100VAC?

Y N

Replace the Main LVPS (PL 18.5).

Turn the power OFF and disconnect the Main LVPS J501, J510, and the Sub LVPS J504. Turn ON the machine 15sec later. **Is the voltage between the Main LVPS J510-3 (+) (BSD 1.6) and the GND (-) +24VDC?**

Y N

Replace the Main LVPS (PL 18.5).

Is the voltage between the Sub LVPS J504-3 (+) (BSD 1.7) and the GND (-) +24VDC?

Y N

Turn the power OFF and unplug the Power Cord from the outlet. Disconnect J6 on the Main LVPS to check the following connections for open circuits and poor contacts.

- Between the Main LVPS J6-2 and the Sub LVPS J8-2
- Between the Main LVPS J6-4 and the Sub LVPS J8-1

If no problems are found, replace the Sub LVPS (PL 18.3).

Check the +24VDC circuit for a short circuit in the Frame by referring to Chapter 7 Wiring Data.

Is the voltage between the Main LVPS J501-6 (+) and the GND (-) +24VDC?

Y N

Replace the Main LVPS (PL 18.5).

Check the wire to the applicable component for an open circuit or poor contact by referring to Chapter 7 Wiring Data.

Machine Not Ready RAP

"Machine not ready" is defined as any condition where the machine is not capable of performing its basic tasks (Copy or Print). "Not ready" ranges from a machine that is totally inert, without any indication of power, to a machine that appears ready but does not respond to either Control Panel commands or Network input.

Initial Actions

Switch off power and disconnect the cord.Disconnect all accessories (Finisher, H-Transport, Fax, HCF, Tray Module, Foreign Interface). Reconnect power and reboot the machine. If the problem is no longer present, then one of the ancillary devices is faulty.

Switch off power, reconnect one of the accessories, and reboot. Repeat until the problem returns. refer to the appropriate BSD and wirenet for that device.

Procedure

The first step is to categorize the problem. Decide which of the following condition best describes the problem:

- Dead Machine
- Does not complete Boot-up
- Boots up; does not respond to Control Panel
- Boots up; does not print (or other Network problem)

Dead Machine

If the machine shows no sign of power (fans or motors running, backlight on UI display, LEDs on Control panel), check for AC line voltage at the Finisher Outlet.

1. If AC is not present, go to the AC Power RAP.
2. If AC is present check for:
   - STBY +5VDC Power
   - +5VDC Power
   - +24VDC Power RAP (7525/30/35) or +24VDC Power RAP (7545/56)

If the UI remains blank, go to OF 3.3 Power On Self Test (POST) RAP.

Does not complete Boot-up

Failure to complete the boot routine can be caused by corrupt software or mismatched software versions. GP 9 explains how to reload s/w.

If the software appears to load, but the IOT and Finisher platforms are missing on the UI display, replace the MD PWB (PL 18.2A: 7525/30/35) or (PL 18.2B: 7545/56).

Boot failures can also be caused by hardware failures in the SBC, or communication failures between the SBC and the rest of the machine. The SBC PWB has a 7-segment LED that changes state as the boot-up progresses. See OF 3.3 Power On Self Test (POST) RAP for details.

Boots up; does not respond to Control Panel

Check the following:

1. Refer to BSD 2.1 User Interface.

2. Check the UI Cable between the SBC PWB and the UI I/F PWB for damage or loose connections.
3. Check the connections of the wiring and PWBs within the Control Panel Assembly.
4. If the check is good, replace the following parts in sequence:
   - Control Panel Assembly (PL 18.3)
   - SBC PWB (PL 35.2)
   - MD PWB
     - PL 18.2A (7525/30/35)
     - PL 18.2B (7545/56)

Boots up; does not print (or other Network problem)

Go to the OF 16-1 Network Printing Problems Entry RAP.

Toner CRUM Mismatch RAP

NOTE: *The WC 7556 Family is shipped with "Worldwide Neutral" Toner Cartridges. When the Cartridges shipped with the machine are installed, the machine is set to Worldwide Neutral configuration.*

When the first toner cartridge (any color) is replaced in the WC 7556F machine, the Geographic Differentiation Code and Toner Cartridge Type in NVM are automatically changed to the same settings as the replacement cartridge. Once these NVM are set, the machine toner configuration can only be changed with a CRUM conversion.

One or more Toner Cartridges are of the wrong type (i.e., a "Sold" cartridge installed in a "metered" configured machine.

Procedure

1. Press the **Machine Status** button on the Control Panel.
2. Select **Supplies**.
3. The UI displays **Cartridge Error** for the mismatched cartridge.
4. Go to the Fault Code for the color that displays an error:
   - 393-937 Toner Y CRUM Data Mismatch Fail RAP
   - 393-938 Toner M CRUM Data Mismatch Fail RAP
   - 393-939 Toner C CRUM Data Mismatch Fail RAP
   - 393-926 Toner K CRUM Data Mismatch Fail RAP

USB Port Disabled

USB Ports can be Enabled/Disabled in Centreware® Internet Services (CWIS) by the System Administrator

Procedure

Log into CWIS as the System Administrator and verify the status of the USB Ports.

No-Run RAP

Machine Model (Speed) information corrupted or not set

Procedure

Machine Speed information must be loaded using the appropriate SIM Card.

1. Insert the SIM containing machine speed information .

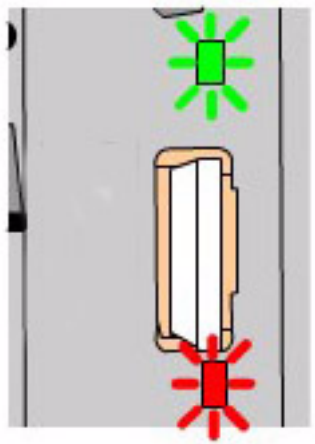

Figure 1 Inserting SIM Card

2. When the SIM is inserted, the status will be indicated by an LED display as shown in Figure 1 . The LEDs are located on the SBC PWB and are visible through small square holes in the frame above (**Green**) and below (**Red**) the SIM socket. The following list describes the LED display status:
   - Solid Green LED indicates correct insertion. It should remain on for 2 seconds.
   - Solid RED Diode indicates incorrect insertion. It will remain on until the SIM is removed.
   - Flashing Green LED indicates activity, and should flash for 5 seconds at half-second intervals.
   - Solid Green LED (until card is removed) indicates **Successful Installation**.
   - Flashing Red LED (at half-second intervals until card is removed) indicates **Incomplete** error or **Failed SIM**.
3. Power off the machine, then switch the power back on after the SIM is installed.

Xerographic Messages RAP

Machine fails to detect Toner dispensing (Replace Toner message) or Drum Cartridge (Drum Cartridge Error message); message can't be cleared, no status codes displayed.

Turn the power off, then on.

Drum Cartridge Error message is displayed on the UI:

Turn the power off.

Inspect the Drum cartridges for damage and ensure that cartridges are firmly inserted into position.

Remove the Drum Cartridge(s) and inspect the Drum CRUM Coupler Assembly at the rear of the machine for proper mounting and possible damage:

- Drum CRUM Coupler (Y) - P/J112
- Drum CRUM Coupler (M) - P/J113
- Drum CRUM Coupler (C) - P/J114
- Drum CRUM Coupler (K) - P/J115

If no problem is found, check the wiring from the MD PWB J528 to the Drum CRUM Coupler Assemblies for an open or short circuit, or physical damage:

- BSD 9.5 Drum Life Control (Y,M)
- BSD 9.6 Drum Life Control (C,K)

If the wiring is OK, replace the following parts in sequence:

- MD PWB (PL 18.2B)
- MCU PWB (PL 18.2B)
- Drum CRUM Coupler (PL 8.1)

Replace Toner message is displayed on the UI:

Turn the power off.

Ensure that the Toner Cartridges contain toner, are not damaged or obstructed, and are firmly seated in place.

Check the wiring from the MD PWB J529 to the Toner Dispense Motor(s) for an open or short circuit, or physical damage:

- J220, J221 - BSD 9.25 Toner Dispense Control (Y,M)
- J222, J223 - BSD 9.26 Toner Dispense Control (C,K)

If the wiring is OK, replace the following parts in sequence:

- MD PWB (PL 18.2B)
- MCU PWB (PL 18.2B)
- Toner Dispense Motor (PL 5.1)

OF 3.3 Power On Self Test (POST) RAP

This procedure uses the 7 segment LED Display located on the Single Board Controller (SBC) to diagnose Power On Self Test (POST) failures.

Procedure

Observe the 7 segment LED Display as you switch on the power.

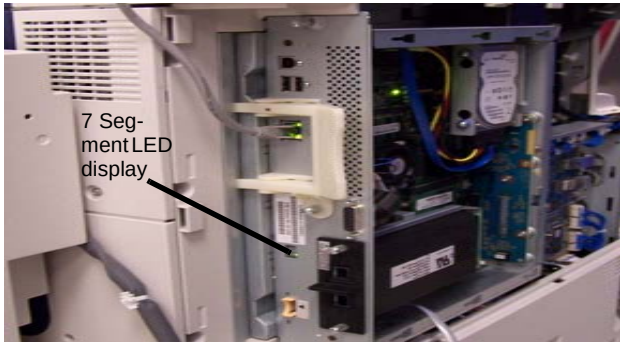

Figure 1 SBC LED

If a failure is detected during POST, the LED will display a numerical code that indicates the malfunctioning component. When the test is completed successfully, the display will go blank.

(Table 1) describes these patterns and the steps to take if they occur. You must repeat the test (power off then on; observe LEDs) until no flash codes occur.

CAUTION

If you replace the Flash Memory, SBC, or System Hard drive, you must perform an AltBoot (GP 9) at the first power-up.

Table 1 Power On Self Test

Test Name	Code	Code Description	Service Action	Comments
Display Test	8	Initial 7-Segment display test		All segments lit (SUCCESS) = power to PWB and display is not faulty. This happens extremely quickly and you must be watching the display the moment of power on to observe this.

Table 1 Power On Self Test

Test Name	Code	Code Description	Service Action	Comments
PWBA	1	Controller Failed	1. Remove and reseat NVM/FLASH Memory Module several times. PO/PO machine several times to make sure issue is resolved. 2. If problem still persists, replace the NVM/FLASH Memory Module (PL 35.2). 3. If problem still persists, replace SBC PWBA (PL 35.2)	Test 1 validates that the Microprocessor can talk to the various ASICs and FPGAs - There are 2 main reasons for this failure. The code on the FLASH module is corrupt or the SBC PWB is bad. If replacing the FLASH module does not resolve the problem, then there is a major PWB failure and the SBC PWB needs to be replaced.
System Memory	2	System Memory Failed	1. Remove and reseat System Memory Module several times. PO/PO machine several times to make sure issue is resolved. 2. If problem still persists, replace the System Memory Module (PL 35.2). 3. If problem still persists, replace SBC PWBA (PL 35.2)	**2** is displayed at start of the System Memory test and then if test is successful this is replaced with 0. Heartbeat will then start flashing 500ms on/500ms off. On failure **2** remains displayed indicating that U-boot cannot execute out of SDRAM. SDRAM not present or faulty.
EPC Memory	3	EPC Memory Failed	1. Remove and reseat SBC EPC Memory Module several times. PO/PO machine several times to make sure issue is resolved. 2. If problem still persists, replace the SBC EPC Memory Module (PL 35.2). 3. If problem still persists, replace SBC PWBA (PL 35.2)	Indicates that EPC memory is not present or faulty, code 3 is displayed on failure, else the screen is left unchanged. U-boot will continue boot process. ***NOTE:*** *UI Frame Buffer Memory (Actual Display video Data) is stored in the EPC memory module. Another indication of BAD EPC is a WHITE screen on the UI panel.*
NVM & RTC Module	4	NVM Memory Failed	1. Remove and reseat Flash/NVM Memory Module several times. PO/PO machine several times to make sure issue is resolved. 2. If problem still persists, replace the Flash/NVM Memory Module (PL 35.2). 3. If problem still persists, replace SBC PWBA (PL 35.2)	NVM read/write sample test. Code **4** is displayed on error, else display is left unchanged. The u-boot continues to load.
Flash Module	5	Flash Memory Failed	1. Remove and reseat Flash/NVM Memory Module several times. PO/PO machine several times to make sure issue is resolved. 2. If problem still persists, replace the Flash/NVM Memory Module (PL 35.2). 3. If problem still persists, replace SBC PWBA (PL 35.2)	Kernel image corrupted - board does not boot. **5** is displayed just before the test start then set to 9 just before jump to kernel. Flash fault could be a h/w or s/w issue.

Table 1 Power On Self Test

Test Name	Code	Code Description	Service Action	Comments
External Hard Drive	6	External Hard Drive Failed	1. Reseat SATA data/power cable on both ends (drive and board) PO/PO machine several times to make sure issue is resolved. 2. If problem persists, replace SATA data/power cable (PL 35.2). 3. If problem still persists, replace the Hard Drive (PL 35.2). 4. If problem still persists, replace SBC PWBA (PL 35.2)	SATA cable and or Hard Disk fault. SATA init function run, 6 code displayed on error.
Machine in Ready Mode	Blank	No Faults Detected	N/A	If 7-segment display is left blank then machine is in Ready mode no faults detected by these tests.

OF 16-1 Network Printing Problems Entry RAP

This Procedure is provided to help identify and diagnose network printing problems.

Initial Actions

- Ensure the machine is online.
- Ensure that no IOT faults exist that prevent the IOT from functioning. That is, copies can be made, or prints can be printed with Print Test Pattern on the PWS or made from the UI in Tools mode.

Determine the following:

- Are any jobs printing on the printer?
- Is the problem related to one workstation?
- Is the problem related to one job?
- Have any changes been made to the network prior to a printing problem?
- Was a backup log of network configuration data created? If so, was it last created by a CSE or the customer/SA?

If there are multiple protocols enabled on the printer, and the problems are ONLY occurring with one network protocol, go to the procedure appropriate for that protocol:

- NOVELL: OF 16-2, Novell Netware Checkout RAP
- TCP/IP: OF 16-3, TCP/IP Checkout RAP
- APPLETALK: OF 16-4, Appletalk Checkout RAP
- NETBIOS: OF 16-5, Netbios Checkout RAP

Procedure

No printing occurs (jobs won't print, can't see printer, or can't connect to printer)

Y N

If, instead of job printing normally, there is a literal printing of the PDL (many pages of code, go, or if the job prints, but looks wrong (wrong fonts, missing fonts, other image quality problems), go to the OF 16-9, Job Prints Incorrectly RAP.

The problem occurs in all print jobs from all clients.

Y N

The problem occurs in a specific job from all clients.

Y N

The problem occurs in all jobs from a specific client or group of clients,

Y N

If the problem is with a specific job from a specific client, the problem is likely with the client; either not connected to the network, wrong or old driver, bad application files or a hardware failure in the client.

If no printing can be done from a specific client or group, while other clients or group function normally, the likely cause is a problem in the customer's network.

If the problem is specific to a single application or group of applications, ensure that current drivers are loaded.

If the problem occurs in only one job, go to the OF 16-8 Problem Printing Job RAP.

A

A

Check that the printer is physically connected to the network cable and that the cable/connections are OK. Disconnect and reseat the cable at both ends. Check to see if the problem is corrected. **The problem continues.**

Y N

Return to Service Call Procedures.

Go to GP 7 (Network Printing Simulation) and send a print job. **An acceptable print is produced.**

Y N

- verify machine settings
- reload system software
- If the problem continues, reseat the SBC System Memory and System Disk Cable.
- If the problem continues, replace the following (PL 35.2) in order until the problem is resolved:
  - System Disk Cable
  - SBC System Memory
  - SBC PWB
  - System Disk

Print out a Configuration Report (GP 6). Review the NetWare, TCP/IP, Apple Talk, and Microsoft Networking (NETBIOS) settings. **At least one networking protocol is enabled.**

Y N

The printer is not installed properly. Inform the customer/system administrator that the printer needs to be installed and setup for the appropriate networking protocol.

Go to dC312 and check for a selectable protocol (not grayed out). **There is at least one selectable protocol.**

Y N

Switch off the machine power to reboot the SBC. When machine is ready, select dC312 again. Check for a selectable protocol (not grayed out). **There is at least one selectable protocol.**

Y N

When machine is ready, select dC312 again. Check for a selectable protocol (not grayed out).

Check for a selectable protocol. (Not grayed out) **There is at least one selectable protocol.**

Y N

Go to GP 9 and perform the Regular AltBoot procedure.

Verify that the problem is corrected. If the problem continues, return to the start of this procedure.

Verify that the problem is corrected. If the problem continues, return to the start of this procedure.

Select **Start**. Observe the test results. **The test passed.**

Y N

Switch the machine power off/on to reboot the SBC. Select Switch off the machine power to reboot the SBC. When machine is ready, select dC312 again. Select the desired protocol and select **Start**. **The test passed.**

B

B

Y **N**

Perform the following:

- There may be a problem with the network port. Ask the system administrator to test the port.
- If the problem continues, reseat the SBC System Memory and System Disk Cable.
- Go to GP 9 and perform the Regular AltBoot procedure.
- If the problem continues, replace the following ((PL 35.2) in order until the problem is resolved:
  - System Disk Cable
  - SBC System Memory
  - SBC PWB
  - System Disk
- If the problem continues, have the customer/System administrator replace the network drop cable.

Go to the appropriate RAP for the network protocol type that failed the Echo test.

- NOVELL: OF 16-2, Novell Netware Checkout RAP
- TCP/IP: OF 16-3, TCP/IP Checkout RAP
- APPLETALK: OF 16-4, Appletalk Checkout RAP
- NETBIOS: OF 16-5, Netbios Checkout RAP

Verify that the problem is corrected. If the problem continues, go to GP 9 and perform the Regular AltBoot procedure.

CAUTION

The AltBoot procedure (GP 9) will delete all stored data on the System Disk Drive, including E-mail addresses, Xerox Standard Accounting data, and network configuration information. ***ALWAYS*** *clone the machine (GP 13), if possible, before performing AltBoot. If the machine failure is such that cloning is not possible, ensure that the customer is aware of the data loss.*

Reload software via AltBoot (GP 9). **The problem continues.**

Y **N**

Return to Service Call Procedures.

Select the most appropriate from the following:

- Jobs Won't Print, Can't See Printer, Can't Connect to Printer
  - NOVELL: OF 16-2, Novell Netware Checkout RAP
  - TCP/IP: OF 16-3, TCP/IP Checkout RAP
  - APPLETALK: OF 16-4, Appletalk Checkout RAP
  - NETBIOS: OF 16-5, Netbios Checkout RAP
- A particular Job Won't Print - go to the OF 16-8 Problem Printing Job RAP, Problem Printing Job RAP
- Instead of job printing normally, there is a literal printing of the PDL (many pages of cryptic code) - Go to the OF 16-9, Job Prints Incorrectly RAP
- Job prints, but looks wrong. Wrong fonts, missing fonts, other image quality problems - Go to the OF 16-9, Job Prints Incorrectly RAP

OF 16-2 Novell Netware Checkout RAP

Use this RAP if the printer is enabled for Novell Netware protocol, but there are problems printing to it.

It is assumed that before entering here that the IOT is known to be OK.

Perform OF 16-1 Network Printing Problems Entry RAP, Network Entry RAP before using this RAP.

Initial Actions

Question the system administrator and determine if any changes have been made to the machine Network Setup or the network.

Procedure

Determine if the problem is occurring on multiple workstations. **Only one workstation is unable to print.**

Y **N**

Have the customer/system administrator run **pconsole.**

Check Print Queue, Attached Print Servers. **The print server is attached to the queue.**

Y **N**

Check Print Queue, Status.

Ensure the flag that indicates that new print servers can attach to queue is set to yes. **The flag is set to Yes.**

Y **N**

Have the customer/system administrator set the flag to Yes.

There may be a problem with the Network and Connectivity Setup on the printer. If a configuration report has not already been run, do so now (GP 6). Consult with the system administrator and ensure that the following Netware settings are correct on the printer:

- IPX Frame Type is correct (Ethernet Only)
- Primary Server name is correct (Bindery Only)
- NDS Tree and Context is correct (Netware 4.x, or later, NDS Only)
- Print Server name is correct
- A Print Server password is set and the same password is set for the print server object on the NDS tree

All settings are OK.

Y **N**

Go to Connectivity and Network Setup. Make Changes as appropriate.

Switch the machine power off/on to reboot the SBC. Check for a reoccurrence of the problem. **The problem continues.**

Y **N**

Done. Return to Service Call Procedures.

Go to GP 9 and perform the Regular AltBoot procedure.

Go to GP 9 and perform the Regular AltBoot procedure.

Check the following:

A

A

- In **pconsole,** check Print Queue, Print Queue Information, Status. Ensure that the following two flags are set to Yes.
  - Print servers can service jobs in the queue
  - Users can add jobs to the queue

  NOTE: *Administrator or Print Queue Operator rights are required to make these changes.*

- Notify customer/system administrator. There may be a network problem or a problem with the client workstation.

The problem occurs only on one job.

Y N

Have the customer or system administrator check the workstation configuration. There may be a network problem or a problem with the client workstation.

Have the customer or system administrator reload the print driver on the affected workstation. Ensure that the problem is corrected. If the problem continues, escalate the call to the Customer Service Center (CSC).

A

OF 16-3 TCP/IP Checkout RAP

Use this RAP if the printer is enabled for TCP/IP protocol, but there are problems printing to it.

Initial Actions

- Perform OF 16-1 Network Printing Problems Entry RAP, Network Entry RAP before using this RAP.
- It is assumed that before entering here that the IOT is known to be OK.
- Ensure that the printer is properly configured for the TCP/IP Network. Verify with the system administrator that the following printer settings are correct:
  - Printer IP address
  - Subnet mask
  - Broadcast Address
  - Default Gateway
- For Solaris 2.5 and above, the key operator or system administrator must have root privilege to install the printer.
- For SunOs, have the system administrator ensure that the /etc/printcap file is properly configured.

Procedure

Determine if problem is occurring on multiple workstations. **Only one workstation is unable to print (answer no if unsure)**

Y N

Print out a configuration report. (GP 6). Review the TCP/IP settings. **TCP/IP is enabled.**

Y N

The printer is not installed for TCP/IP. Inform the customer/system administrator that the printer needs to be installed and setup for TCP/IP.

Select dC312. Check if TCP/IP is selectable. **TCP/IP is selectable (not grayed out).**

Y N

Switch off/on the machine power to reboot the SBC. When machine is ready, select (dC312) again. Check if TCP/IP is selectable. **TCP/IP is selectable (not grayed out).**

Y N

Go to GP 9 and perform the Regular AltBoot procedure.

Verify that the problem is corrected. If the problem continues, return to the start of this procedure.

Select dC312, select **TCP/IP** and select **Start**. Observe the test results. **The test passed.**

Y N

In Echo Test (dC312), select **Internal TCP/IP** and select **Start**.
Observe the test results. **The test passed.**

Y N

Perform the following:

- There may be a problem with the network port. Ask the system administrator to test the port.

A A B C

A B C

- If the problem continues, have the customer/System administrator replace the network drop cable.
- If the problem continues, reseat the SBC System Memory and System Disk Cable.
- Go to GP 9 and perform the Regular AltBoot procedure.
- If the problem continues, replace the following ((PL 35.2) in order until the problem is resolved:
  - System Disk Cable
  - SBC System Memory
  - SBC PWB
  - System Disk

Perform the following:

- There may be a problem with the network port. Ask the system administrator to test the port.
- If the problem continues, have the customer/System administrator replace the network drop cable.
- If the problem continues, reseat the SBC PWB Memory and System Disk Cable.
- If the problem continues, replace the following in order until the problem is resolved:
  - System Disk Cable
  - SBC PWB Memory
  - SBC PWB
  - System Disk

The printer needs to be reinstalled on the network. Have the system administrator reinstall the printer.

- Ensure that all configurations and IP addresses are valid.

The problem occurs only on one job

Y N

Have the customer/system administrator Ping from the affected workstation to the IP address of the printer.

Observe results. **The workstation can ping the printer successfully.**

Y N

Have the customer/system administrator ping to another known good IP address, other than the broadcast address, on the network. **The workstation can successfully ping another IP address on the network.**

Y N

Inform the customer/system administrator there is a problem with the workstation.

Ensure the Subnet Mask, IP address, broadcast address and Default Gateway are set properly at the printer.

Have the system administrator check the workstation configuration. Ensure that the workstation is set-up properly to print to the printer according to the System Administrator Guide.

D

D

The same job prints ok from another workstation.

Y N

Have the customer/system administrator reload the print driver on the affected workstation. If the problem continues, escalate the call to the Customer Service Center (CSC).

There is an application problem. Have the customer contact the Customer Service Center.

OF 16-4 AppleTalk Checkout RAP

Use this RAP if the printer is enabled for AppleTalk protocol, but there are problems printing to it.

Initial Actions

- Perform OF 16-1 Network Printing Problems Entry RAP, Network Entry RAP before using this RAP.
- It is assumed that before entering here that the IOT is known to be OK.

Procedure

Print out a configuration report (GP 6). **AppleTalk is enabled.**

Y N

The printer is not installed for AppleTalk. Inform the customer/system administrator that the printer needs to be installed and setup for AppleTalk.

Select dC312 and select **Start**.

Check if AppleTalk is selectable. **AppleTalk is selectable (not greyed out).**

Y N

Switch off/on the machine power to reboot the SBC. When machine is ready select dC312 and select **Start**. Check if AppleTalk is selectable. **AppleTalk is selectable (not greyed out).**

Y N

Have the system administrator reinstall the printer on the network. When complete, select dC312. Check if AppleTalk is selectable. **AppleTalk is selectable (not greyed out).**

Y N

Go to GP 9 and perform the Regular AltBoot procedure.

Verify that the problem is corrected. If the problem continues, return to the start of this procedure.

Verify that the problem is corrected. If the problem continues, return to the start of this procedure.

Select **AppleTalk** and select **Start**. Observe the test results. **The test passed.**

Y N

Perform the following:

- There may be a problem with the network port. Ask the system administrator to test the port.
- If the problem continues, have the customer/System administrator replace the network drop cable.
- If the problem continues, reseat the SBC System Memory and System Disk Cable.
- Go to GP 9 and perform the Regular AltBoot procedure.
- If the problem continues, replace the following ((PL 35.2) in order until the problem is resolved:
  - System Disk Cable
  - SBC System Memory
  - SBC PWB
  - System Disk

Check the network drop cable for obvious damage. If OK, there may be a network problem. Notify the system administrator.

Perform the following:

- There may be a problem with the network port. Ask the system administrator to test the port.
- If the problem continues, have the customer/System administrator replace the network drop cable.
- Recheck the AppleTalk configuration settings.
- Check the following AppleTalk configuration settings:
  - The Printer name is correct
  - Zone name is correct
  - The proper printer drivers are installed on the clients and that the printer is visible and selected in the chooser.

OF 16-5 NETBIOS Checkout RAP

Use this RAP if the printer is enabled for NETBIOS protocol, but there are problems printing to it.

Initial Actions

- Perform OF 16-1 Network Printing Problems Entry RAP, before using this RAP.
- It is assumed that before entering here that the IOT is known to be OK.
- If running NETBIOS over an TCP/IP network, ensure that the printer is properly configured for TCP/IP network. Verify with the system administrator that the following printer settings are correct:
  - Host Name
  - Printer Name
  - Workgroup (domain)

Procedure

Print out a Configuration Report (GP 6). **NetBIOS is enabled.**

Y N

The printer is not installed for NetBios. Inform the customer/system administrator that the printer needs to be installed and setup for NetBIOS.

Select dC312. Check if NetBIOS is selectable. **NetBIOS is selectable (not grayed out).**

Y N

Switch off/on the machine power to reboot the SBC. When machine is ready, select dC312 again. Check if NetBIOS is selectable. **NetBIOS is selectable (not grayed out).**

Y N

Have the system administrator reinstall the printer on the network. When complete, select **Diagnostics** tab, **SBC/Network** tab, **Echo Test (dC312)**.

Check if NetBIOS is selectable. **NetBIOS is selectable (not grayed out).**

Y N

Go to GP 9 and perform the Regular AltBoot procedure.

Verify that the problem is corrected. If the problem continues, return to the start of this procedure.

Verify that the problem is corrected. If the problem continues, return to the start of this procedure.

Select **NetBIOS** and select **Start**. Observe the test results. **The test passed.**

Y N

Perform the following:

- There may be a problem with the network port. Ask the system administrator to test the port.
- If the problem continues, have the customer/System administrator replace the network drop cable.
- If the problem continues, reseat the SBC System Memory and System Disk Cable.
- Go to GP 9 and perform the Regular AltBoot procedure.
- If the problem continues, replace the following ((PL 35.2) in order until the problem is resolved:

A

  - System Disk Cable
  - SBC System Memory
  - SBC PWB
  - System Disk

Check the network drop cable for obvious damage. If OK, there may be a network problem. Notify the system administrator.

Perform the following:

- There may be a problem with the network port. Ask the system administrator to test the port.

Recheck the NetBIOS configuration settings.

Check fault History for 16.800.46, 16.802.46, or 16.803.46 fault codes. **The fault(s) occurred.**

Y N

Return to the top of this RAP and answer NO to statement that the interface is IP/Ethernet or IP/Token Ring.

Go to the OF 16-3, TCP/IP RAP.

A

OF 16-8 Problem Printing Job RAP

Use this RAP when a particular job won't print. Other jobs print OK.

Procedure

Check the output to see if a PDL error sheet was printed. **An error sheet was printed.**

Y N

On the machine UI, select Job Status, Other Queues, All Completed Jobs, Save. Check the queue for the job in question. **The job is in the log.**

Y N

Select Other Queues, All Incomplete Jobs, Save. **The job is stuck in the queue.**

Y N

Check for a fault listed against the job in question. **There is a fault(s) listed with the job.**

Y N

Go to GP 9 and perform the Regular AltBoot procedure.

Go to the appropriate RAP for the fault(s) listed with the job.

Switch the machine power off/on to reboot the SBC. **The job printed OK.**

Y N

Inform the customer the job must be deleted. Delete the job. Instruct the customer to recreate and re-send the job. **The job printed OK.**

Y N

Go to GP 9 and perform the Regular AltBoot procedure.
If the problem continues, there may be a problem with the job. See if other jobs print OK. If not, instruct the customer/System administrator to reload the print driver on the affected workstation.
If the problem continues have the customer call the Customer Service Center.

Done. Return to Service Call Procedures.

Done. Return to Service Call Procedures.

The job must have been printed. Check for the possibility that the job was removed from the printer by another user.

Go to GP 9 and perform the Regular AltBoot procedure.
If the problem continues, there may be a problem with the job. See if other jobs print OK. If not, instruct the customer/System administrator to reload the print driver on the affected workstation.
If the problem continues have the customer call the Customer Service Center.

OF 16-9 Job Prints Incorrectly RAP

The job prints, but incorrectly.

Procedure

Discuss the problem with the customer and/or inspect the incorrect output. **There is a font problem.**

Y N

The problem is occurring on all jobs from all clients.

Y N

The problem is occurring on jobs from one particular client.

Y N

The problem is related to a particular job. Have the customer call the Customer Support Center.

There may be a problem with the client workstation. Check/perform the following:

- See if problem is related to a particular job. If so, go to the OF 16-8 Problem Printing Job RAP.
- Ensure that the client meets minimum specifications for the Centreware® software drivers.
- Ensure the latest printer drivers are loaded.
- Have the customer/System administrator reload the printer driver.

Have the customer/system administrator replace the print drivers. Ensure that the latest drivers available are loaded. **The problem still continues.**

Y N

Return to Service Call Procedures.

Go to GP 9 and perform the Regular AltBoot procedure.

Have the customer view the job in Print Preview of the application. **The problem appears in Print Preview.**

Y N

There may be a font substitution that is not acceptable to the customer. In the Printer Setup for the print driver, if Always Send to Printer is selected, the actual fonts will be sent to the printer from the workstation. This will slow down the printer performance, but will usually solve the font problem.

There may be a problem with the client workstation. Check/perform the following:

- See if problem is related to a particular job. If so, go to the OF 16-8 Problem Printing Job RAP.
- Ensure that the client meets minimum specifications for the Centreware® software drivers.
- Ensure the latest printer drivers are loaded.
- Have the customer/System administrator reload the printer driver.

OF 17-1 FAX Entry RAP

There is a problem with Embedded FAX. The primary causes of Fax problems, **in order of likelihood**, are:

- Phone line problems
- Customer operation problems
- PBX setup problems
- Machine configuration problems
- Fax hardware problems

Initial Actions

- If the problem is FAX not printing the Date and Time stamp, enter dC131 and change the setting in NVM location 200-143 from a 0 to a 1.
- Verify the presence of the FAX PWB.
- Check the Configuration Sheet to confirm that the FAX PWB is detected.
- Perform GP 1 Fax PWB Internal Selftest.
- Check the phone line connection (GP 14).
- If the FAX icon is not present, check cable (PL 35.2) item 8 on the SBC.

Procedure

NOTE: *Embedded Fax is designed to work over analog lines only. PBX and DSL lines attempt to emulate a PSTN analog line, and must be configured appropriately. Incorrect PBX settings are a major cause of service calls.*

The following line types are supported on a best efforts only basis:

- *xDSL lines with appropriate filtering.*
- *PBX extensions using digital signalling, with an analog speech path.*
- *ISDN lines are not supported.*
- *In a VoIP environment, Embedded Fax devices need separate analog lines or a T.38 Protocol Adapter*

The Fax cannot send or receive.

Y N

The Fax can send but not receive.

Y N

If the Fax receives but does not send, check the FAX set-up menus:

- Enter **Tools** (GP 2). Select **Service Setting**s.
- Select **Fax Service Settings**.
- Select **Line __ Setup**
  - Check that the Fax is set for **Send and Receive**.

If the Fax transmits but cannot receive,

- Check the phone number. To receive a FAX the sender must know the phone number assigned to the phone line connected to the FAX.
- Check the FAX set-up menus.
  - Enter **Tools** (GP 2). Select **Service Setting**s.
  - Select **Fax Service Settings**.
  - Select **Line __ Setup**.

A

Check that the Fax is set for **Send and Receive**.

Print a Configuration Report (GP 6). **The Fax is listed as installed.**

Y N

Switch off the Power.
Disconnect then reconnect the Fax PWB, Riser PWB, and SBC NVM PWB. Switch on the power. If the problem remains, perform the following:
Replace the Fax PWB (PL 35.1).
Reload SW (GP 9).
Replace SBC NVM PWB (PL 35.2).
Replace the SBC PWB (PL 35.2).

Check the FAX set-up menus.

- Enter **Tools** (GP 2). Select **Service Setting**s.
- Select **Fax Service Settings**.
- Select **Fax Setup**.
  - Check that the Fax is enabled.
  - If the **Enable** and **Disable** buttons are not present, then the initial setup at install was not completed correctly. Press **Setup** and complete the setup.
- Line Configuration - be sure pulse or tone selection is correct.
- FAX Transmission Defaults (check closely for FAX transmission problems)
  - Automatic Redial Setups
  - Automatic Resend
  - Audio Line Monitor
  - Transmission Header Text
  - Batch Send
- Receive Defaults (check closely for FAX receive problems)
  - Receive Printing Mode
  - Default Output Options
  - Secure Receive
  - Auto Answer Delay
- FAX Country Setting
- File Management

NOTE: *Though typically the FAX feature is setup for analog transmission, if FoIP is being used, the following may be helpful if there is a problem.*

If the machine fails to receive or transmit fax jobs and the transmit speed drops immediately to 9600 bps or 7200 bps, then do the following:

The transmitting or receiving baud rate can be reduced from 33.6K bps to either 14.k bps, 9600 bps, or 7200 bps by changing the proper NVM locations.

The NVM values are:
3 = 33.6K 11= 14.4K 13 = 9600 14 = 7200

The NVMs are:
Sending NVM 200-087 “T30MaxSpeedL1Tx” (single line)
Sending NVM 200-088 “T30MaxSpeedL2Tx” (for 2 line fax)

A

Receive NVM 200-089 “T30MaxSpeedL1Rx” (single line)
Receive NVM 200-090 “T30MaxSpeedL2Rx” (for 2 line fax)

Otherwise, replace the FAX PWB (PL 35.1).

OF 18-1 Secure Access RAP

Overview

Xerox Secure Access uses an external device, such as a card reader or biometric device, to authorize access to the machine. This reader then passes the information to the controller, which handles the authentication process including, which GUI screens are displayed, accepting GUI responses, that defines their content and order. The controller can pass user identities and passwords directly to the machine after gathering the data from an external server. All communication is via a secure network link, Figure 1 Network Diagram.

Xerox Secure Access shall be controlled via the Centreware® Internet Services GUI. The active status is displayed in tools within Access Control. If communication cannot be established with the Xerox Secure Access Server the service may be temporarily disabled by touching the now enabled Off button within the Xerox Secure Access tools window. Once communication is reestablished the stored Xerox Secure Access setting shall be restored.

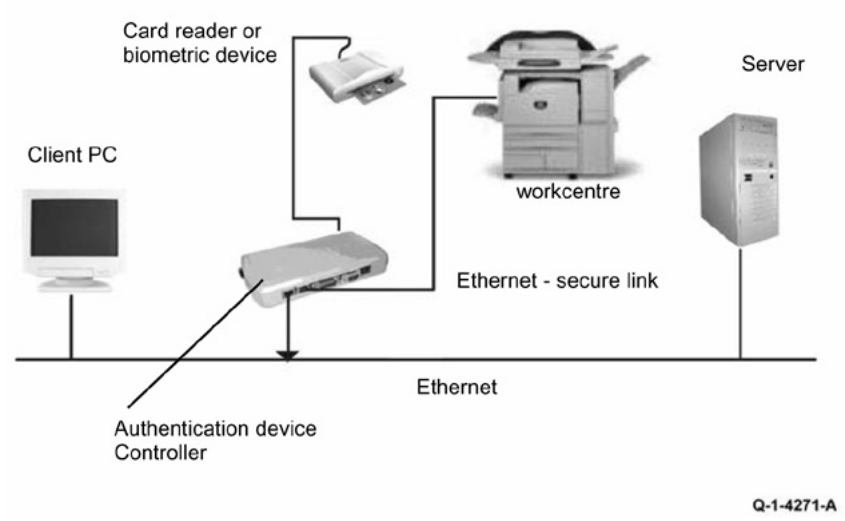

Figure 1 Network Diagram

Initial Action

Before working on the Xerox Secure Access, check out the machine in the service mode to insure no faults are displayed and that the machine is functioning properly. If it is not, repair any problems before proceeding with diagnosing the Secure Access Accessory. Diagnostics can be entered to test copier functionality when Secure Access is installed.

Perform the following steps

- Check the connection between the Card Reader and the Secure Access Authentication Device.
- Check for the LEDs are on or blinking on the Secure Access Authentication Device. If the LEDs on the Secure Access Authentication Device are not operating, go to Secure Access Authentication Device Failure.

- Check for the LEDs are on or blinking on the Card Reader. If the LEDs on the Card Reader are not operating, go to Card Reader Failure.
- If customers have problems of install / setting up, or any other problems related to their Secure Access Administrator, they should refer to the Secure Access System Administrator's Guide or contact Xerox Technical Support.

Secure Access Authentication Device Failure

The primary failure modes are power problems or failed hardware components. The symptom of these failures can be detected by observing the LEDs on the Secure Access Authentication Device, Figure 2.

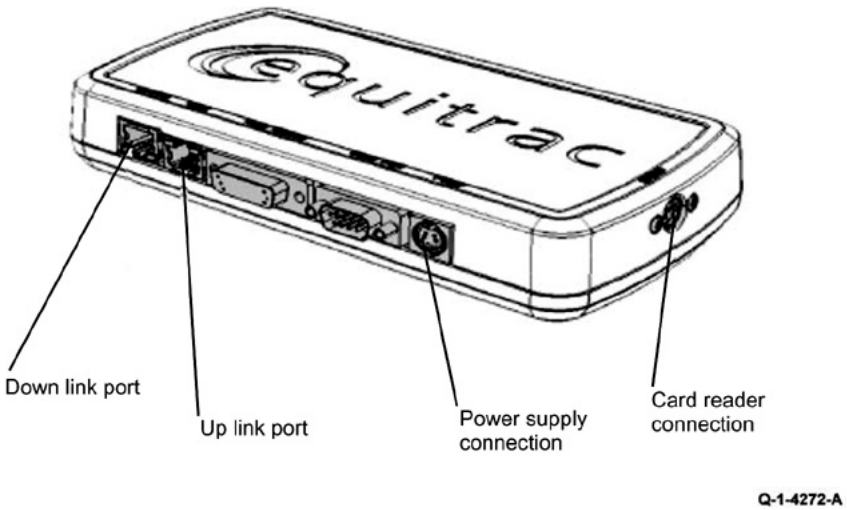

Figure 2 Authentication Device

Check the power to the Secure Access Authentication Device.

- Check the power supply at the wall socket. If there is no power at the wall socket, have the customer restore power and continue when confirmed.
- Disconnect the power cord from the wall socket and the power supply. Check the power cord for continuity and damage. If necessary install a new power cord. Disconnect the power cord from the power supply and plug the power cord into the wall outlet. Using a multi meter, check for line voltage at the end of the power cord disconnected from the power supply. If there is power at the wall but not at the end of the power cord. Install a new power cord.
- Disconnect the small power cord from the Secure Access Authentication Device. Check there is +5V at the connector that plugs into the Secure Access Authentication Device. If there is no +5V, install a new power supply.
- There is a 'Keyed' switch on the end of the Secure Access Authentication Device. Obtain the key from the customer. Insert the key into the 'keyed' switch and cycle the switch 1 quarter turn clockwise and then back to its start position. Observe the LEDs and listen for an audible tone.
- If the LEDs on the Secure Access Authentication Device "Uplink" and "Downlink" Ethernet ports do not cycle on and off as the controller goes through its boot-up process, or if the audible tone is not heard. Install a new Secure Access Authentication Device.

  NOTE: *A new device will require the Secure Access Administrator to reconfigure the server with the new MAC address for the new part. Be sure to inform the Secure Access Administrator of the MAC address of the device being removed and the MAC address of the new device.*

Card Reader Failure

The primary failure modes are power problems or failed hardware components. The symptom of these failures can be detected by observing the LED on the Card Reader. Refer to Figure 2.

- The Green LED on the Card Reader is On
- The Green LED on the Card Reader Flashes Rapidly
- The Red LED on the Card Reader is On
- The Red LED on Card Reader Flashes Slowly
- The Red LED on Card Reader Flashes Rapidly
- The Card Reader LEDs are not On or Blinking

Table 1 Fault Indications

When the LED on the card Reader is	Description
Red	The authentication device is in idle mode; there is no active session.
Green	The authentication device is in ready mode; a session is active.
Slow Flashing Red	The authentication device has no connection to the server.
Slow Flashing Green	The authentication device is communicating to the server.
Fast flashing red	Invalid card / password; access denied.

The Green LED on the Card Reader is On

- This indicates an active Secure Access Session and the Card Read correctly corresponds to a valid Secure Access Account.
- If the UI on the machine is locked, check with the customer for a second PIN number for additional security. This PIN number will need to be entered via the soft keys on the UI.
- Ensure that the card corresponds to a valid Secure Access Account.

The Green LED on the Card Reader Flashes Rapidly

- This indicates a valid card swipe and in the process of authentication on the server.
- If the UI on the machine is locked, check with the customer for a second PIN number for additional security. This PIN number will need to be entered via the soft keys on the UI.

- If the UI on the machine is locked and no secondary PIN is required. Check that the Xerox Secure Access is installed correctly, and ask customer to check the configuration at the server.

The Red LED on the Card Reader is On

- This indicates the Card Reader is in an idle state. If the red LED remains on, and the UI remains locked after a card is swiped, re-orient the card and re-swipe.
- Try a known good card in the reader. If the other card is working on the problem Card Reader. Ask customer to make sure the card corresponds to a valid Secure Access Account.
- Try the card in a known good reader. If the card is working on a known good Card Reader, it may be a problem with the Secure Access Authentication Device. Check to see is the LEDs on the Secure Access Authentication Device are on.

The Red LED on Card Reader Flashes Slowly

- This indicates the reader is connected to the controller but the controller is not connected to the server. Check the Ethernet green LED on the Authentication Device.
- If the Ethernet green LED on the Authentication Device is off, make sure the connectors of the LAN connections are working properly. If the connections are working, this indicates the network may not work properly. Ask customer to check with Network Administrator.
- If the Ethernet green LED on the Authentication Device is either on or flashing, contact the Secure Access Administrator

The Red LED on Card Reader Flashes Rapidly

- This indicates a valid card but does not correspond to a valid Secure Access Account at the server, test with a known valid user's card.
- If all cards react the same way, this indicates the Server Configuration may not be correct. Ask customer to check the Server Configuration.
- If all the card react this way, this indicates the cards are not valid. Ask customer to check the Server Configuration

The Card Reader LEDs are not On or Blinking

- Check to see is the Secure Access is correctly installed.
- If there is still no LED on the Card Reader, install a new the Card Reader.

NOTE: *If there is another working card reader available, the readers can be switched to confirm failure. If the Card Reader is not functioning, the web page of the machine has a setting that will enable UI keypad access. If the users know their card access number, they can use the machine by manually entering their number. The process is as follows:*

1. Go to the machine web page under properties and then security and check the box that says "Allow local user interface initiation".
2. Enable the keypad and test with valid credentials. This will validate the rest of the secure access function.
3. Leave it in this mode until the new card reader can be installed.

OF 99-1 Reflective Sensor RAP

Sensors consist of a light-emitting diode and a photo transistor. When energized, the light from the LED causes the photo transistor to conduct, drawing current through a pull-up resistor. The voltage drop across the resistor causes the input signal to the control logic to change from a high to a low.

Reflective sensors operate by light from the LED being reflected off the paper to the photo transistor, causing the output of the sensor to go to the low (L) state.

Initial Actions

Ensure that the sensor is not actuated.

Procedure

Enter the component control code indicated in the Procedure and/or Circuit Diagram of the RAP that sent you here. Actuate the sensor using a sheet of paper. **The display changes with each actuation.**

Y N

Clean the sensor and then block and unblock it. **The display changes with each actuation.**

Y N

Access to some sensors in this machine is difficult. Follow the **Y** leg if you can access the sensor connector. Follow the **N** leg if access is not possible. **The sensor connector is accessible.**

Y N

Check the voltage at the output of the PWB or power supply (refer to the Circuit Diagram). In the example for this generic procedure, voltage is provided from J533 on the I/F (MDD) PWB. Check for pull-up voltage for the output signal. This voltage will be either +5 VDC or +3.3 VDC depending on the circuit (refer to the Circuit Diagram for the correct voltage). **The voltage corresponds with the voltage shown in the Circuit Diagram.**

Y N

Check for short circuit(s) that may be loading down the line. Check the power input to the PWB(s). If this does not resolve the problem, replace the PWB.

Refer to the Circuit Diagram. Check the wires from the PWB to the sensor for opens, shorts, or loose contacts. If the wires are OK, replace the sensor. If this does not resolve the problem, replace the PWB

The display indicates a constant L.

Y N

Check for +5VDC to the sensor (typically pins 1 and 3 on a 3 pin connector). +5 VDC is present.

Y N

Use the circuit diagram and/or the wirenets in Section 7 to trace the problem.

Disconnect the sensor. Use a jumper wire to connect the output wire from the sensor (typically pin 2 on a 3 pin connector) to DC COM or GND. **The display changes from H to L.**

A B C

A B C

Y N

There is either an open circuit or a failed PWB. Use the Circuit Diagram to trace the output wire to the PWB. If the wire is OK, replace the PWB.

Replace the sensor.

Disconnect the sensor. **The display indicates H.**

Y N

When sensors are unplugged, the input at the PWB should always be high if there is no harness short or PWB failure. Check the output wire from the sensor (typically pin 2 on a 3 pin connector) to the PWB for a short circuit. If the wire is good, replace the PWB.Figure 1 represents a typical sensor for this machine.

The sensor is shorted. Replace the sensor.

Look for unusual sources of contamination.

The sensor and the circuit appear to operate normally. Check the adjustment of the sensor. Clean the sensor. Check for intermittent connections, shorted, or open wires. If the problem continues, replace the sensor.

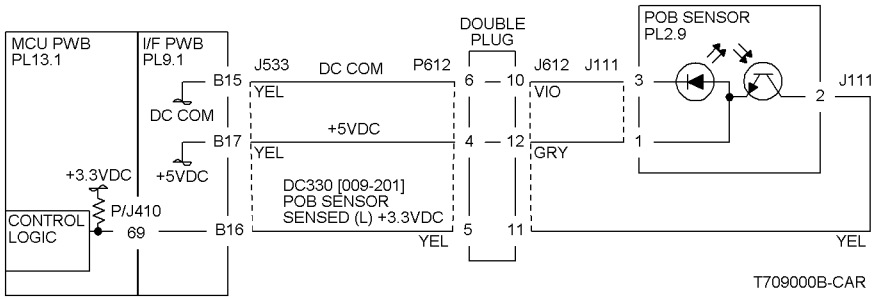

Figure 1 Typical Reflective Sensor Circuit Diagram

OF 99-2 Transmissive Sensor

Sensors consist of a light-emitting diode and a photo transistor. When energized, the light from the LED causes the photo transistor to conduct, drawing current through a pull-up resistor. The voltage drop across the resistor causes the input signal to the control logic to change from a high to a low.

Transmissive sensors have a flag or actuator that is pushed into the space between the LED and transistor, blocking the light beam and causing the output of the sensor to go to the high (H) state. This actuation may be caused by a sheet of paper striking a pivoting flag, or a rotating actuator on a shaft or roll.

Some sensors have built-in inverters and the outputs will go to the low (L) state when the sensors are blocked. In other situations, the processing of the signal in control logic may cause the logic level displayed on the UI or the PWS to be the opposite of the actual voltage output by the sensor. The specific RAP and/or Circuit Diagram will indicate if this is the case. Figure 1 is an example of a typical sensor circuit for this machine

Procedure

Enter the component control code indicated in the specific RAP and/or Circuit Diagram. Block and unblock the sensor. **The display changes with each actuation.**

Y N

Clean the sensor and then block and unblock it. **The display changes with each actuation.**

Y N

Access to some sensors in this machine is difficult. Follow the **Y** leg if you can access the sensor connector. Follow the **N** leg if access is not possible. **The sensor connector is accessible.**

Y N

Check for +5VDC at the output of the PWB or power supply. Refer to the Circuit Diagram. In the example for this generic procedure, voltage is provided from J533 on the I/F (MDD) PWB. Check for pull-up voltage for the output signal. This voltage will be either +5 VDC or +3.3 VDC, depending on the circuit. Refer to the circuit diagram for the correct voltage.

Y N

Check for short circuit(s) that may be loading down the line. Check the power input to the PWB(s). If this does not resolve the problem, replace the PWB.

Refer to the Circuit Diagram. Check the wires from the PWB to the sensor for opens, shorts, or loose contacts. If the wires are OK, replace the sensor. If this does not resolve the problem, replace the PWB

The display indicates a constant L

Y N

Check for +5VDC to the sensor (typically pins 1 and 3 on a 3 pin connector). +5 VDC is present.

Y N

Use the circuit diagram and /or the wirenets in Section 7 to trace the problem.

A B C D

A B C D

Disconnect the sensor. Use a jumper wire to connect the output wire from the sensor (typically pin 2 on a 3 pin connector) to DC COM or GND. **The display changes from H to L.**

Y N

There is either an open circuit or a failed PWB. Use the Circuit Diagram to trace the output wire to the PWB. If the wire is OK, replace the PWB.

Replace the sensor.

Disconnect the sensor. **The display indicates H.**

Y N

When sensors are unplugged, the input at the PWB should always be high if there is no harness short or PWB failure. Check the output wire from the sensor (typically pin 2 on a 3 pin connector) to the PWB for a short circuit. If the wire is good, replace the PWB. Figure 1 represents a typical sensor for this machine

The sensor is shorted. Replace the sensor.

Look for unusual sources of contamination.

The sensor and the circuit appear to operate normally. Check the adjustment of the sensor. Clean the sensor. Check the sensor actuator/flag for proper operation. Check for intermittent connections, shorted, or open wires. If the problem continues, replace the sensor.

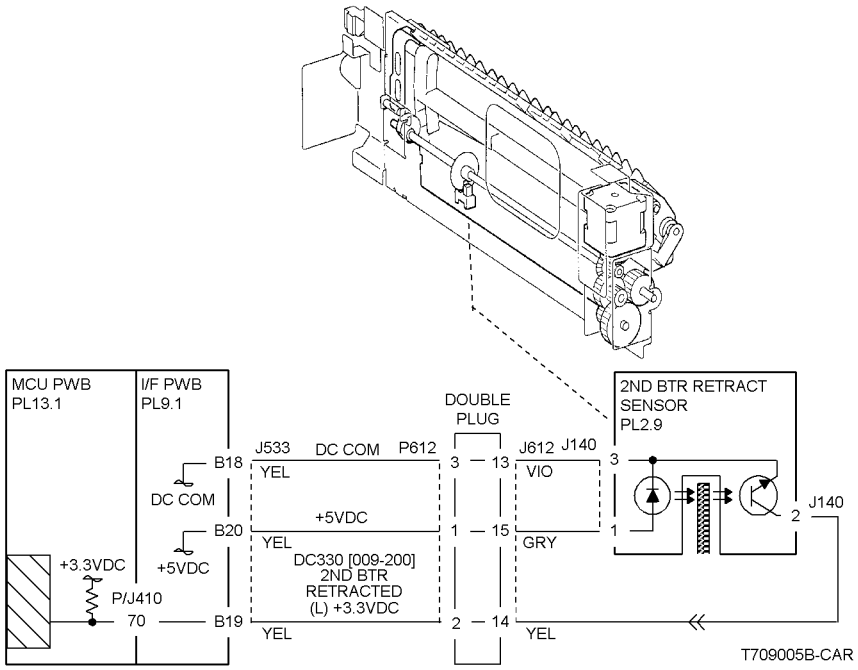

Figure 1 Typical Transmissive Sensor Circuit Diagram

OF 99-3 Switch

Procedure

Enter dC330 [XXX-XXX]. Actuate the switch. **The display changed.**

Y N

There is +3.5 / 5VDC measured between Pin 2(+) of the Switch and GND(-).

Y N

Check the wire between the switch Pin 2 and the PWB Pin 3 for an open circuit and poor contact. If the check is OK, replace the PWB.

There is +3.5 / 5VDC measured between Pin 1(+) of the Switch and GND(-).

Y N

Replace the switch.

Check the wire between the PWB Pin 4 and the switch Pin 1 for an open circuit and poor contact. If the check is OK, replace the PWB.

De-actuate the switch. **The display changed.**

Y N

Disconnect the connector on the switch. **The display changed.**

Y N

Check for a short between the switch Pin 2 and the PWB Pin 3. If the check is OK, replace the PWB.

Replace the switch.

Replace the switch.

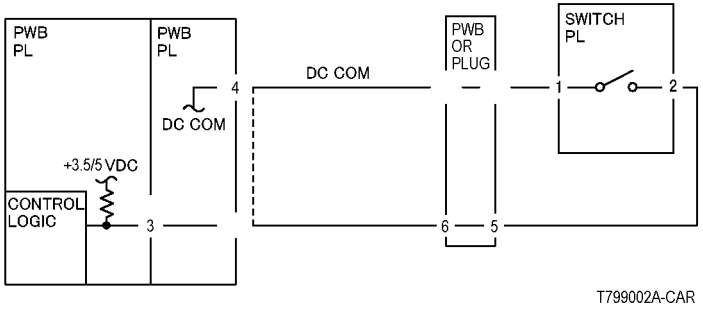

Figure 1 2003

OF 99-4 Generic Solenoid/Clutch RAP

Solenoids and electric clutches are essentially electromagnets. Typically, a positive voltage is applied to one end of a coil, and a current driver is connected to the other end. Control Logic switches this driver to GND potential, actuating the magnet. Bidirectional solenoids have a bipolar driver connected to each end. One leg is switched to 24 VDC and the other to GND.

Figure 1 is a circuit diagram of a typical solenoid.

Initial Actions

Ensure that there is no damage or binding in the solenoid or in any mechanical linkage. If there is an Adjustment for the clutch or solenoid, make sure that the procedure was performed correctly

Procedure

The clutch/solenoid is always energized.

Y N

Enter the component control code (dC330) given in the RAP or the Circuit Diagram. Press the **Start** button **The Clutch or solenoid energizes.**

Y N

Press the **Stop** button **There is +24 VDC between the switched leg (J407 pin A6 in the example, Figure 1) of the control PWB and GND.**

Y N

There is +24 VDC between the powered leg (J407 pin A7 in the example, Figure 1) of the control PWB and GND.

Y N

Disconnect the connector (J407 in the example, Figure 1). **There is +24 VDC between the powered leg of the control PWB and GND.**

Y N

Refer to the 24 VDC wirenets. check the input power to the control PWB. **+24 VDC is present.**

Y N

Use the 24 VDC wirenets to troubleshoot the problem.

Replace the control PWB.

Check the wire in the powered leg of the circuit, (J407 pin A7 in the example, Figure 1) for a short circuit to GND. If the wire is OK, replace the clutch or solenoid.

Disconnect the connector (J407 in the example, Figure 1). Check continuity through the two wires and the clutch or solenoid. **There is less than 100 ohms between the two legs of the circuit.**

Y N

Disconnect the clutch or solenoid. Check continuity through the two wires and the clutch or solenoid. **There is less than 100 ohms across the clutch or solenoid.**

Y N

Replace the clutch or solenoid.

A B C D E

One of the two wires between the control PWB and the clutch or solenoid is open. Repair or replace the wiring as required.

Replace the control PWB.

Press the **Start** button. **There is less than 1 VDC between the switched leg of the control PWB and GND.**

Y N

Replace the PWB.

Replace the clutch or solenoid.

The clutch or solenoid appears to be functioning correctly. Refer to the Circuit Diagram for the RAP that sent you here. Check the wires for loose connections or damage that may cause intermittent operation. Perform any required adjustments.

There is a short circuit on the switched leg (J407 pin A6 in the example) from the solenoid or clutch. Check the wire for a short circuit to GND. If the wire is OK, replace the solenoid. If the problem persists, replace the controlling PWB.

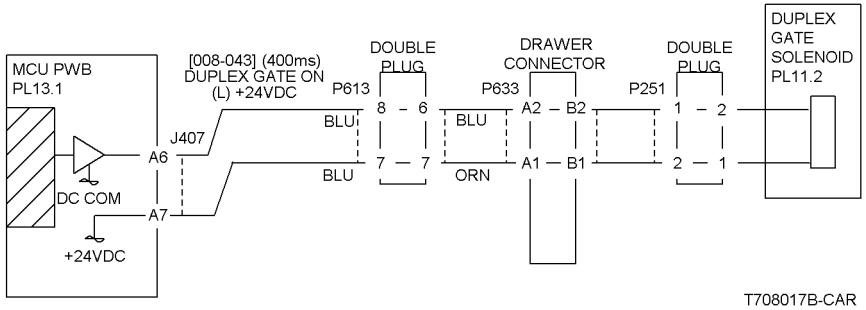

Figure 1 Typical Solenoid/Clutch Circuit Diagram

A B C D E

OF 99-6 2 Wire Motor Open

Procedure

NOTE: *Before performing this RAP, ensure that the motor is free to rotate.*

Enter the dC330 [XXX-XXX].
There is +24VDC measured between Pin 3(+) of the PWB and GND(-).

Y N

There is +24VDC measured between the Motor Pin 2(+) of the Motor and GND(-).

Y N

There is +24VDC measured between the Motor Pin 1(+) of the Motor and GND(-).

Y N

There is +24VDC measured between the PWB Pin 4(+) of the PWB and GND(-).

Y N

Replace the PWB.

Check the wire between the PWB Pin 4 and the Motor Pin 1 for an open circuit or poor contact.

Replace the motor.

Check the wire between the PWB Pin 3 and the Motor Pin 2 for an open circuit or poor contact.

Replace the PWB.

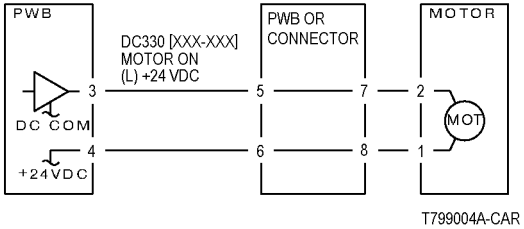

Figure 1 Motor CD

OF 99-7 2 Wire Motor On

Procedure

Turn off the power. Remove the PWB connector. **There is 10 Ohm's or less measured between the connector Pin 3 and the frame.**

Y N

Replace the PWB.

Check the wire between the connector Pin 3 and the motor Pin 2 for a short circuit.
If the check is OK, replace the motor.

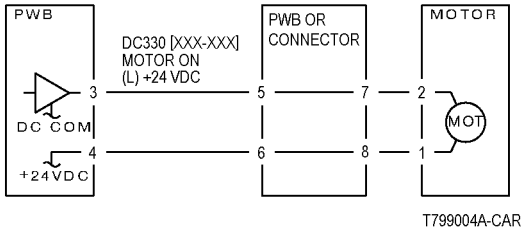

Figure 1 Motor CD

OF 99-8 Set Gate Solenoid Open

Procedure

There is +24VDC measured between the Nip/Release Solenoid Pin 1 (+) and GND (-).

Y N

There is +24VDC measured between the PWB Pin 5 (+) and GND(-).

Y N

Check +24VDC inputs on the PWB. If the check is OK, replace the PWB.

Check the wire between the PWB Pin 5 and the Nip/Release Solenoid Pin 1 for an open circuit or poor contact.

Enter dC330 [XXX-XXX]. **There is +24VDC measured between the PWB Pin 4 (+) and GND(-).**

Y N

There is +24VDC measured between the Nip/Release Solenoid Pin 3 (+) and GND (-).

Y N

Replace the Nip/Release Solenoid.

Check the wire between the PWB Pin 4 and the Nip/Release Solenoid Pin 3 for an open circuit and poor contact.

Follow the following when the release caused a problem.

Go to the dC330 [XXX-XXX]. **There is +24VDC measured between the PWB Pin 6 (+) and GND(-).**

Y N

There is +24VDC measured between the Nip/Release Solenoid Pin 2 (+) and GND (-)

Y N

Replace the Nip/Release Solenoid.

Check the wire between the PWB Pin 6 and the Nip/Release Solenoid Pin 2 for an open circuit or poor contact.

Replace the PWB.

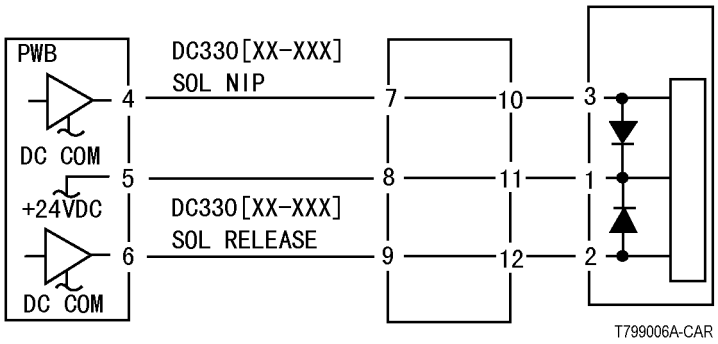

Figure 1 Nip Solenoid CD

OF 99-9 Multiple Wire Motor

For use on DC motors that:

- have 1 or 2 DC power inputs
- are controlled by 2 or more drivers
- have no DC COM connections for return power
- have no specific feedback circuits

Procedure

Connect black meter lead to ground. Measure voltage at each pin of J2 (example only, refer to the actual Circuit Diagram for the correct voltage and connector designation). **+24 VDC is measured at each pin.**

Y N

Disconnect J2. Measure voltage at P2-1 and P2-6. **+24 VDC is measured.**

Y N

Switch machine off then on. Measure voltage at P2-1 and P2-6. **+24 VDC is measured.**

Y N

If an interlock circuit is present, check the interlock circuit. Repair as required. If the interlock circuit is good, replace the PWB.

Check the motor wires for a short circuit. If the wires are good, replace the Motor.

Check the motor wires for obvious damage. If the wires are good, replace the Motor.

Replace the PWB.

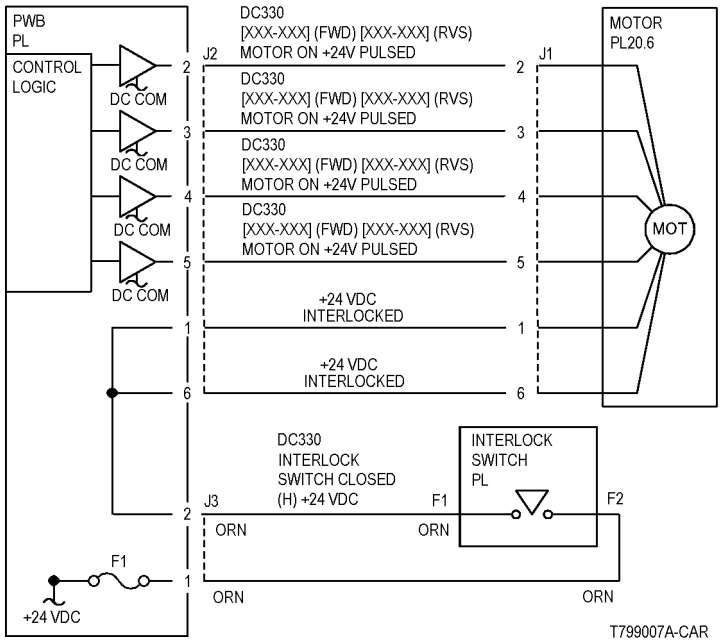

Figure 1 Motor CD

3 Image Quality

Image Quality RAPs

IQ1 IOT Image Quality Entry RAP 3-3
IQ2 IIT Image Quality Entry RAP 3-6
IQ3 1mm Lines RAP 3-7
IQ4 Image Shift in Process Direction RAP 3-8
IQ5 White Lines RAP 3-8
IQ6 SLED Transfer Cycle Lines RAP 3-9
IQ7 IN-OUT Density Difference RAP 3-10
IQ9 Video Data/Crosstalk RAP 3-10
IQ10 Image Shift in Inboard-to Outboard Direction RAP 3-11
IQ11 Edge-less Image RAP 3-12
IQ12 Contamination Lines RAP 3-13
IQ13 Chip/Half Chip Blanks RAP 3-14
IQ14 SLED Transfer Failure RAP 3-14
IQ15 Tapes Not Peeled RAP 3-15
IQ16 Charging Roll Pitch White Lines (type 1) 3-15
IQ17 Charging Roll Pitch White Lines (type 2) 3-16
IQ18 Photoreceptor Pitch Color Lines 3-16
IQ19 Background on Gloss RAP 3-17
IQ20 Toner Empty Detection Color Lines RAP 3-17
IQ21 Toner Droplet Contamination RAP 3-18
IQ22 Smear on Heavyweight RAP 3-18
IQ23 Rough Black RAP 3-19
IQ24 Moist Paper Transfer Failure RAP 3-19
IQ25 Toner Contamination at Lead/Trail Edge RAP 3-20
IQ27 Trail Edge Transfer Failure RAP 3-21
IQ29 Color Lines RAP 3-21
IQ30 Transfer Blank Areas (Partially Moist Paper) RAP 3-22
IQ31 Nip Marks RAP 3-23
IQ32 Moisture RAP 3-23
IQ33 Low Image Density RAP 3-24
IQ34 Wrinkled Image RAP 3-25
IQ36 IOT Background RAP 3-25
IQ38 Color-to-Color Misregistration RAP 3-27
IQ39 Skew/Misregistration RAP 3-27
IQ40 Process Direction Bands, Streaks, and Smears RAP 3-28
IQ41 Unfused Copy/Toner Offset RAP 3-29
IQ42 Repeating Bands, Streaks, Spots, and Smears RAP 3-30
IQ44 Spots RAP 3-31
IQ45 Missing Colors RAP 3-31
IQ46 Background on Coated Paper 3-32
IQ47 Multi Color Transfer Failure 3-32
IQ48 Lines on Coated Paper (EXIT) 3-33
IQ49 Caterpillar Mark (Transfer) 3-34
IQ50 White Stripes Due to Trimmer Jam (DEV) 3-34
IQ51 Heat Haze/Mock Heat Haze 3-35
IQ52 Poor Reproducibility of Fine Lines (IOT Image Quality) 3-36
IQ53 Outboard Deletion in All Colors 3-37
Image Quality Specifications 3-38
Things to Note for Image Quality Restrictions 3-41

IQ1 IOT Image Quality Entry RAP

The purpose of this RAP is to serve as the entrance vehicle into the Image Quality RAPs section. All Image Quality RAPs must be accessed through this RAP.

The RAP will have you evaluate the copies made during the Call Flow procedure for image quality defects. It will refer you to the Image Quality Analysis RAPs, the Image Quality Defect section in order to diagnose and repair any image quality problems.

Initial Actions

1. Check for the presence of the defect in Copy mode and in Print mode. If the problem occurs in Copy mode only, go to the IQ2 RAP.

NOTE: *Color Calibration Adjustment (customer should refer to* ***Color Calibration in the SA Guide****) (SAG) is a color calibration for the copier and printer. It compensates for differences between the actual and the expected (target) toner densities for each color. This procedure should be performed whenever there is a noticeable change in the appearance (quality) of the output, particularly changes in color tones or densities. Performing a Color Calibration Adjustment on a regular basis will help to maintain consistent color quality over time. Since this procedure can affect all jobs for all users, it is recommended that this procedure be performed only by the Machine Administrator.*

Ask the customer SA to perform the Color Calibration Adjustment if any of the following problems are reported:

- Incorrect colors
- Poor gray balance
- Colors have shifted over time
- Color densities too high or low

Continue with the procedure if the problem remains.

Procedure

Go to Table 1. Examine the prints for any of the listed defects. Perform the corrective action that is listed.

Table 1 Image Quality Defects

Defect	Description	Corrective Action
1mm Lines	At Cin50% and Cin30%, the lines in the process direction have reversed black and white colors. Width approximately. 1mm.	Go to the RAP IQ3
Image Shift in Process Direction	The image is shifted in the process direction.	Go to the RAP IQ4
White Lines	White lines appear in the process direction for all densities.	Go to the RAP IQ5
SLED Transfer Cycle Lines	Cyclical matte lines or black lines appear in the process direction. The cycle changes depending on the process speed. (175mm/s: 9.5mm, 121mm/s: 6.1mm, 79mm/s: 4.2mm)	Go to the RAP IQ6
IN/OUT Density Difference	The densities between the IN and OUT sides are different.	Go to the RAP IQ7
Video Data/Crosstalk	An image with different color overlaps another.	Go to the RAP IQ9
Image Shift in Inboard-to Outboard Direction	The image lands on the blank area and gets dragged in the Inboard-to Outboard direction.	Go to the RAP IQ10
Edge-less Image	An image is printed on the edges.	Go to the RAP IQ11
Contamination Lines	There are blank areas. Their size is proportional to the size of contaminants.	Go to the RAP IQ12
Chip/Half Chip Blanks	Blank areas in sizes of 2.7mm or 5.4mm.	Go to the RAP IQ13
SLED Transfer Failure	Black lines and blank areas (lines) appear repeatedly in units of 2.7mm. They appear by half chip units.	Go to the RAP IQ14
Tapes Not Peeled	The highlight portions are too obvious. The whole paper seems to be filled with lines.	Go to the RAP IQ15
Charging Roll Pitch White Lines - 1	If the BCR is deformed at the BCR and Photoreceptor NIP sections, the trace may appear as thin white lines in the Inboard-to Outboard direction on the highlight portion at the Charging Roll Pitch.	Go to the RAP IQ16
Charging Roll Pitch White Lines - 2	If the substances contained in the CLN-Roll get stuck to the BCR at the BCR and CLN-Roll NIP sections, the resistance on the BCR gets reduced and may cause the appearance of white lines in the Inboard-to Outboard direction.	Go to the RAP IQ17
Photoreceptor Pitch Color Lines	Vibrations during the Drum CRU transportation may cause scrapes and friction in the BCR and the Photoreceptor, resulting in leftover electrostatic memory on the Photoreceptor that generates thin white streaks in the Inboard-to Outboard direction on the highlight portion at the Photoreceptor Pitch. Limit sample: SIR.84.00, < (incl.) G3 level	Go to the RAP IQ18

Table 1 Image Quality Defects

Defect	Description	Corrective Action
Toner Empty Detection Color Lines	At Pre Near or Near Empty state, if a customer had removed the Cartridge and knocked on it to collect the toner towards the exit in attempt to use the very last bit of toner, it may cause color stripe deterioration.	Go to the RAP IQ20
Toner Droplet Contamination	A contamination consisting of random spatters of toner in sizes of a few millimeters.	Go to the RAP IQ21
Smear on Heavyweight	When the lead edge of paper reaches the Secondary Transfer, it immediately increases the Secondary Transfer section load and causes the IBT Drive Roll speed to change (decrease in speed). This change in speed changes the difference in relative speed between the Photoreceptor and the Transfer Belt surface in the K-color Primary Transfer section, hence creating a smear (distorted image).	Go to the RAP IQ22
Rough Black	On paper that is not flat or has poor hue, the toner may not have been transferred properly due to the irregular paper surface, creating a rough transferred image.	Go to the RAP IQ23
Moist Paper Transfer Failure	The resistance is lowered because the paper is moist. The K color contains carbon that causes it to have larger dielectric loss, and hence it requires a different electrical field from the other colors. There is no latitude because the difference in required electrical field between multi color and K color is larger than the difference between paper resistance and toner resistance.	Go to the RAP IQ24
Toner Contamination at Lead/Trail Edge	Lead Edge: Paper lead edge contacts the Belt when it is transported from REGI to Transfer. Trail Edge: The trail edge of Paper that loops between the Transfer-Fusing sections, at the release of the Secondary Transfer NIP, moves opposite to the feed direction and contacts the BTR surface, or bounds up and contacts the Belt.	Go to the RAP IQ25
Trail Edge Transfer Failure	The paper trail edge, after the Secondary Transfer NIP has been released, bounded up due to the fusing stroke effect and re-transfers to the Transfer Belt.	Go to the RAP IQ27
Color Lines	Presence of paper dust in between the Transfer Belt and the CLN Blade causes poor cleaning.	Go to the RAP IQ29
Transfer Blank Areas (Partially Moist Paper)	Ripples in partially moist paper becomes wrinkles in the Transfer section, causing blank areas to appear.	Go to the RAP IQ30
Nip Marks	When using transparencies, slight lines may appear at the Fuser Heat Roll Pitch.	Go to the RAP IQ31
Wetting	Distorted image may appear at one side or both sides of the paper trail edge when printing halftone fill.	Go to the RAP IQ32
Background	Undesirable toner deposits on the copy or print. The toner deposits can be localized or may cover the entire copy or print. Depending on the density of the background, it is referred to as low, medium, high, or very high background. It may occur in all colors, single colors, or any combination of single colors.	Go to the RAP IQ36
Color Misregistration	Multi-colored images that should be superimposed are offset. This offset may be in the process direction or perpendicular to process direction.	Go to the RAP IQ38
Fuser Offset	Areas of poorly-fused toner are lifted from one area of a print and deposited on a different area, or onto a subsequent print.	Go to the RAP IQ41
High Frequency Bands	Repeating interval bands that are most noticeable in low density (20-30%) halftone areas of the copy. These bands run perpendicular to process direction.	Go to the RAP IQ42
Irregular Process Direction Streak	Streaks: Usually medium-width streaks of (or shifts in) color most noticeable in low density 20-30%) halftone areas of the copy. A deletion in the form of a single streak that runs from the lead edge to the trail edge of the copy.	Go to the RAP IQ40
Lead Edge Toner Smear (fused)	Smears of fused toner on the lead edge of prints	Go to the RAP IQ40
Lead Edge Toner Smear (unfused)	Smears of unfused toner on the lead edge of prints	Go to the RAP IQ41
Low Image Density	A condition that results when too little toner of a single color or combination of colors is developed on the copy or print. This results in lighter copies or prints for the single-color toner or the color that results from the combination of color toners.	Go to the RAP IQ33
Misregistration/Skew	The position and/or alignment of the image relative to the top edge and side edge of the paper is not within specification.	Go to the RAP IQ39
Missing Colors	One or more of the primary colors are missing from the image.	Go to the RAP IQ45

Table 1 Image Quality Defects

Defect	Description	Corrective Action
Regular (Repeating) Bands, Streaks, Spots, or Smears	A defect that repeats at an interval from14 to 264 mm, is most noticeable in low density (20-40%) halftone areas of the copy, and runs perpendicular to process direction. Lines and bands are generally uniform in shape from one end to the other. Streaks are generally shorter than lines and are of nonuniform width along their length. They may have a more ragged or fuzzy appearance than lines.	Go to the RAP IQ42
Spots	Generally circular in shape, these defects can be caused by an absence of toner in a desired area, or a deposit of toner in an undesired area	Go to the RAP IQ44
Unfused prints	Image can be rubbed off with little or no pressure	Go to the RAP IQ41
Wrinkled Image	Areas of 11x17 in./A3 prints have distinctive “worm track” patterns, and/or wrinkles in the paper itself	Go to the RAP IQ34
Background on Coated Paper	Compared to Plain Paper, background is a lot more visible on Coated Paper.	Go to the RAP IQ46
Multi Color Transfer Failure	Paper that has had its Side 1 fused has a reduced percentage of moisture content, which increases its electric resistance. Since the resistance in the Secondary Transfer section also increases by lower humidity or over time, the required electrical field may not be attained, especially in the early mornings (low humidity environment).	Go to the RAP IQ47
Lines on Coated Paper	Lines are generated on Side 1 in 2 Sided mode.	Go to the RAP IQ48
Caterpillar Mark	This is caused by low electric charge in toner.	Go to the RAP IQ49
White Stripes do to Trimmer Jam	When foreign substances such as dirt, dust, toner aggregate (including the case of heated one) exist in the Toner Cartridge, on the Toner Supply Path, or in the Developer Housing Assy and they reach the section between the Developer Roll and the Trimmer, it could obstruct the formation of developer layer.	Go to the RAP IQ50
Heat Haze/Mock Heat Haze	The heat haze occurs at the place where paper is peeled off from the Transfer Belt. The mock heat haze occurs when the transported paper rubs against the Holder DTS (Chute at the Transfer EXIT) as shown in the figure, which charges it electrically and causes the toner to scatter at the Lead and Tail edges of the Solid section. This might form streaks in some parts.	Go to the RAP IQ51
Poor Reproducibility of Fine Lines	The Thin Line Correction Mode is the mode for correcting the poor reproducibility of 600dpi/1200dpi thin lines.	Go to the RAP IQ52
Deletions (outboard, all colors)	There is a light (faded or deleted) area along the outboard side of all prints, due to buildup on the outboard side of all the first BTRs, which is best viewed on halftone test patterns (all colors).	Go to the RAP IQ53

IQ2 IIT Image Quality Entry RAP

This RAP is for troubleshooting IIT (Scanner/ADF) problems only. Before proceeding, verify that the defect is present in Copy mode only. If the defect is present in Print mode, go to the IQ1 RAP.

Initial Actions

Clean the Lens, the top and bottom surface of the Platen Glass, and all Mirrors with Lens and Mirror Cleaner and a soft, lint-free cloth.

Procedure

Compare the defective copies with the descriptions listed in Table 1. Perform the corrective action listed for that defect.

Table 1 IIT Image Quality Problems

Defect	Corrective Action
Background	**Clean the Platen Belt.** **Calibrate the IIT (dC945).**
Blurred or Streaked Copy	Ensure that the Platen Glass is installed correctly. Check/adjust the carriage alignment (ADJ 6.1).
Deletions	Clean the Lens, the top and bottom surface of the Platen Glass, and all Mirrors with Lens and Mirror Cleaner and a soft, lint-free cloth. If the problem persists, replace the CCD/Lens Assembly (PL 1.5).
Misregistration/Skew	Go to the IQ39 RAP.
Moire Patterns in the image areas of the print that have the appearance of a screen or grid overlaying the image. The pattern may be uniform or nonuniform in area or shape.	• Switch between photo modes and, if necessary, original types, to determine which mode minimizes the defect. • Decrease the **Sharpness** level. • Reduce or enlarge the copy slightly. • Rotate the original on the platen by 90 degrees.
Newton Rings Repetitive, irregular-shaped marks that occur when making copies of glossy photographs. These marks are most noticeable in large low-density or highlight areas.	Clean the Document Glass. Place a transparency between the document and the glass.

IQ3 1mm Lines RAP

This RAP troubleshoots parts failure or contamination on the LPH surface.

At Cin50% and Cin30%, the lines in the process direction have reversed black and white colors. Width approximately. 1mm.

Figure 1 1mm Lines Defect Sample

Initial Actions

1. Check customer print to verify 1mm lines or Print Cin50% and Cin30% half tones using print test pattern -13 (dC612), and check for a 1mm line as in Figure 1.
2. Check fault history for any LPH (chain 061) fault(s). Resolve any faults.
3. Replace the paper in use with fresh, dry paper of the correct specification.
4. Use the LPH Cleaner to clean the LPH surface (PL 2.1).

NOTE: *This must be separated from Developer trimmer jam. Do not replace the LPH without consideration.*

5. Perform IQ40 Process Direction Bands, Streaks, and Smears RAP. If this does not resolve the problem, continue with this RAP.

Procedure

Check power to LPH from MD PWB. **There is +5v at P/J532.**

Y **N**

Check power to MD PWB from MCU PWB. **There is +5v at P/J452.**

Y **N**

Check power to MCU PWB from +5VDC LVPS. **There is +5v at P/J401.**

Y **N**

Check power from +5VDC LVPS. **There is +5v at P/J510**

A B C

Y **N**

Go to +5VDC Power RAP.

Check wire harness between the LVPS and MCU PWB for damage. Repair or replace as required (REP 9.11).

Check the F6 2A fuse located on the MCU PWB (PL 18.2A).
If check is ok. Replace the MCU PWB (REP 1.4).
If check reveals blown F6 2A fuse. Replace the fuse.

Replace the MD PWB (REP 1.5).

Go to IQ45.

IQ4 Image Shift in Process Direction RAP

This RAP troubleshoots for corrupt LPH EEPROM data that results in an image shift in the process direction.

Initial Actions

Check the EEPROM data.

1. Access UI Diagnostics (UI Diagnostic (CSE) Mode).
2. Select the **Diagnostics** tab.
3. Select **LPH EEPROM Self Test** (dC304).

Procedure

The EEPROM data is OK.

Y **N**

Replace the LPH Assembly for the affected color (REP 9.10).

Check power to LPH from MD PWB. **There is +5v at P/J532.**

Y **N**

Check power to MD PWB from MCU PWB. **There is +5v at P/J452.**

Y **N**

Check power to MCU PWB from +5VDC LVPS. **There is +5v at P/J401.**

Y **N**

Check power from +5VDC LVPS. **There is +5v at P/J510**

Y **N**

Go to +5VDC Power RAP.

Check wire harness between the LVPS and MCU PWB for damage. Repair or replace as required (REP 9.11).

Check the F6 2A fuse located on the MCU PWB.
If check is ok. Replace the MCU PWB (REP 1.4).
If check reveals blown F6 2A fuse. Replace the fuse.

Replace the MD PWB (REP 1.5).

Go to IQ45.

IQ5 White Lines RAP

This RAP is used to eliminate white lines that appear in the process direction for all densities.

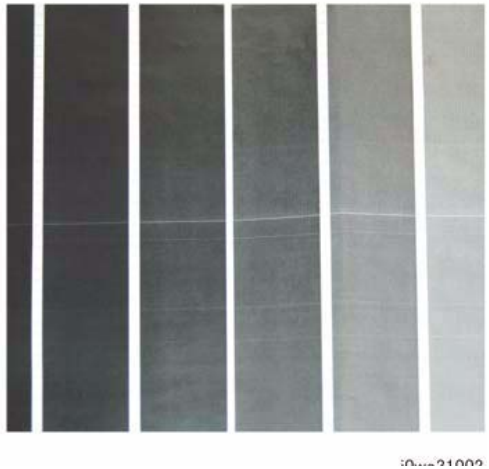

Figure 1 White Lines Defect Sample

Initial Actions

1. Check customer print to verify white lines appear in the process direction for all densities as in Figure 1.
2. Use the LED Print Head (LPH) Cleaner to clean the LPH surface (PL 2.1).

NOTE: *This must be separated from Developer trimmer jam. Do not replace the LPH without consideration.*

3. Perform IQ40 Process Direction Bands, Streaks, and Smears RAP. If this does not resolve the problem, continue with this RAP.

Procedure

White lines still appear after cleaning the LPH surface

Y **N**

Go to Final Actions.

Clean and inspect the LPH Cleaner (PL 2.1). **The LPH Cleaner is damaged or broken.**

Y **N**

Replace the LPH Assembly (REP 9.10).

NOTE: *This must be differentiated from Developer trimmer jam. Do not replace the LPH without consideration.*

Replace the LPH Cleaner (PL 2.1).

IQ6 SLED Transfer Cycle Lines RAP

This RAP is used to eliminate cyclical matte lines or black lines that appear in the process direction.

The pitch changes depending on the process speed. Refer to Table 1.

Table 1 Pitch

Process Speed	Pitch
175mm	9.5mm
121mm	6.1mm
79mm	4.2mm

j0wa31003

Figure 1 Defect Sample

Initial Actions

1. Check customer print to verify cyclical matte lines or black lines appear in the process direction as in Figure 1.
2. Use the LED Print Head (LPH) Cleaner to clean the LPH surface (PL 2.1).

NOTE: *This must be separated from Developer trimmer jam. Do not replace the LPH without consideration.*

3. Perform IQ40 Process Direction Bands, Streaks, and Smears RAP. If this does not resolve the problem, continue with this RAP.
4. Print test pattern -12 (dC612).
5. Print test pattern -13 (dC612).

Procedure

NOTE: *The scale is 5.4mm pitch in print test pattern -12 and 2.7mm pitch in print test pattern -13. These are used as the identification guideline.*

The problem occurs at dC612 (Test Pattern Print)-15.

Y N

Check power to LPH from MD PWB. **There is +5v at P/J532.**

Y N

Check power to MD PWB from MCU PWB. **There is +5v at P/J452.**

Y N

Check power to MCU PWB from +5VDC LVPS. **There is +5v at P/J401.**

Y N

Check power from +5VDC LVPS. **There is +5v at P/J510**

Y N

Go to +5VDC Power RAP.

Check wire harness between the LVPS and MCU PWB for damage. Repair or replace as required (REP 9.11).

Check the F6 2A fuse located on the MCU PWB (PL 18.2A , PL 18.2B).
If check is ok, replace the MCU PWB (REP 1.4).
If check reveals blown F6 2A fuse, replace the fuse.

Replace the MD PWB (REP 1.5).

Replace the LPH (REP 9.10).

Go to IQ45.

IQ7 IN-OUT Density Difference RAP

The densities vary from the inboard to outboard edges.

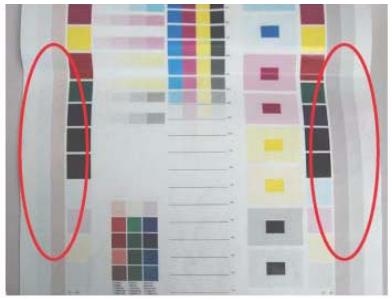

Figure 1 IN-OUT Density Difference Defect Sample

Primary Causes

- The LPH Z direction positioning pin is not in contact with the Photoreceptor.
- Failure in the retract mechanism.
- The positioning plate cannot fit in.
- The LPH positioning pin is bent.
- The tip of the pin is contaminated.
- The LPH positioning pin is not in contact with the Drum bearing surface.
- The gap between the Photoreceptor and the Developer Housing is different at In and Out.

NOTE: *The retract mechanism for the LPH also acts as the Retract Mechanism for the Developer, it may also cause Developer positioning failure.*

Initial Actions

1. Check customer print to verify the densities vary from the inboard to outboard edges as in Figure 1.
2. Use the LPH Cleaner to clean the LPH surface (PL 2.1).
3. Check the EEPROM data (dC304).
4. Check whether the section that contacts the Drum bearing surface of the Developer Housing Assembly is abnormal.
5. Check for dirt or debris between the LPH and the Xero CRU.
6. Check for foreign substances on the tip of the LPH positioning pin (In/Out). (REP 9.15)

Procedure

Perform the following based on the outcome of the above checks:

1. Perform LPH Exposure (“Smile”) Adjustment (ADJ 9.6).
2. Replace Developer Housing Assembly (REP 9.14).
3. Replace DRUM. (see CRUs and Consumables)
4. Replace 1st BTR. (REP 9.2)

IQ9 Video Data/Crosstalk RAP

A different color image overlaps another.

Poor connection of Flat Cable between the MCU and the LPH

Figure 1 Video Data/Crosstalk Defect Sample

Initial Actions

1. Check customer print to verify a different color image overlaps another as in Figure 1.
2. Use the LPH Cleaner to clean the LPH surface (PL 2.1).
3. Print test pattern -12 (dC612).
4. Print test pattern -13 (dC612).

Procedure

NOTE: *The scale is 5.4mm pitch in print test pattern -12 and 2.7mm pitch in print test pattern -13. These are used as the identification guideline.*

The problem occurs at dC612 (Test Pattern Print)-15.

Y **N**

Check power to LPH from MD PWB. **There is +5v at P/J532.**

Y **N**

Check power to MD PWB from MCU PWB. **There is +5v at P/J452.**

Y **N**

Check power to MCU PWB from +5VDC LVPS. **There is +5v at P/J401.**

Y **N**

Check power from +5VDC LVPS. **There is +5v at P/J510.**

Y **N**

Go to +5VDC Power RAP.

Check wire harness between the LVPS and MCU PWB for damage. Repair or replace as required (REP 9.11).

Check the F6 2A fuse located on the MCU PWB (PL 18.2A , PL 18.2B).
If check is ok. Replace the MCU PWB (REP 1.4).

A B C

A B C

If check reveals blown F6 2A fuse. Replace the fuse.

Replace the MD PWB (REP 1.5).

Go to IQ45.

Go to IQ45.

IQ10 Image Shift in Inboard-to Outboard Direction RAP

This RAP is used when an image defect appears as an image landing on the blank area and getting dragged in the Inboard-to Outboard direction as in Figure 1.

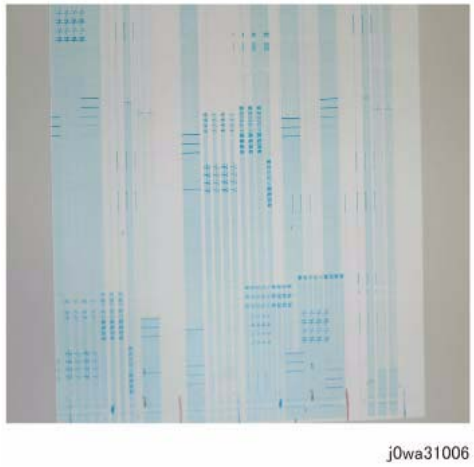

Figure 1 Image Shift in Inboard-to Outboard Direction Defect Sample

Initial Actions

1. Print test pattern -12 (dC612).
2. Print test pattern -13 (dC612).

Procedure

NOTE: *The scale is 5.4mm pitch in print test pattern -12 and 2.7mm pitch in print test pattern -13. These are used as the identification guideline.*

The problem occurs at dC612 (Test Pattern Print)-13.

Y N

There is poor connection between the MCU and the LPH. Check the connection between the MCU and the LPH for open circuit, short circuit, and poor contact. Check the FFC cable connected to the LED Print Head Cable Assembly for damage (PL 2.2). **The above checks are ok.**

Y N

Replace the LED Print Head Cable Assembly (REP 9.11). (PL 2.2)

Check the power to the MCU. **There is +5v at P/J401.**

Y N

Go to +5VDC Power RAP.

Replace the MCU PWB (REP 1.4). **The defect is still present.**

A

A

Y **N**

Go to Final Actions.

Check the power to the LPH. **There is +5v at P/J532.**

Y **N**

Go to +5VDC Power RAP.

Replace the LPH (REP 9.10).

Go to IQ45.

IQ11 Edge-less Image RAP

An image is printed on the margins as in Figure 1.

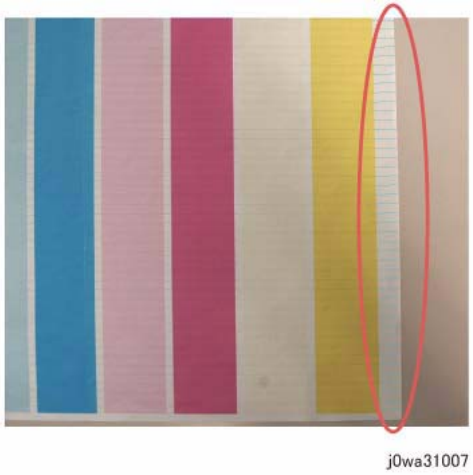

Figure 1 Edge-less Image Defect Sample

Initial Actions

1. Print test pattern -12 (dC612).
2. Print test pattern -13 (dC612).

Procedure

NOTE: *The scale is 5.4mm pitch in print test pattern -12 and 2.7mm pitch in print test pattern -13. These are used as the identification guideline.*

The problem occurs at dC612 (Test Pattern Print)-13.

Y **N**

There is poor connection between the MCU and the LPH. Check the connection between the MCU and the LPH for open circuit, short circuit, and poor contact. Check the LPH Print Head Cable Assembly for damage (PL 2.2). **The above checks are ok.**

Y **N**

Replace the LED Print Head Cable Assembly (REP 9.11). (PL 2.2)

Check the power to the MCU. **There is +5v at P/J401.**

Y **N**

Go to +5VDC Power RAP.

Replace the MCU PWB (REP 1.4). **The defect is still visible.**

Y **N**

Go to Final Actions.

Check the power to the LPH. **There is +5v at P/J532.**

A

A

Y **N**

Go to +5VDC Power RAP.

Replace the LPH (REP 9.10).

Go to IQ45.

IQ12 Contamination Lines RAP

There are blank areas. Their size is proportional to the size of the contaminants as in Figure 1.

NOTE: *Be careful because this phenomenon is very similar to that of the process direction bands, streaks, and smears.*

Figure 1 Contamination Lines Defect Sample

Initial Actions

Use the LPH Cleaner to clean the LPH surface (PL 2.1).

Procedure

Contamination Lines are still present after cleaning the LPH surface.

Y **N**

Go to Final Actions.

Check for process direction bands, streaks, and smears. Go to IQ40. **The defect is still visible.**

Y **N**

Go to Final Actions.

There is failure in the LPH. Check power to the LPH. **There is +5v at P/J532.**

Y **N**

Go to +5VDC Power RAP.

Go to IQ45.

IQ13 Chip/Half Chip Blanks RAP

Blank areas with sizes of 2.7mm or 5.4mm.

Figure 1 Chip/Half Chip Blanks Defect Sample

Initial Actions

1. Check fault history for 061-374, 061-375, 061-376, 061-377 faults. If found go to the appropriate RAP.
2. Check customer print or Print using print test pattern -13 (dC612) to verify 2.7mm or 5.4mm blank areas as in Figure 1.

Procedure

Go to IQ45.

IQ14 SLED Transfer Failure RAP

Black lines and blank areas (lines) appear repeatedly in half chip units of 2.7mm,

Figure 1 SLED Transfer Failure Defect Sample

Procedure

Enter Service Rep. mode. Under the **Diagnostics** tab, select dC304 (LPH EEPROM Selftest).
The EEPROM data is OK.

Y **N**

Replace the LPH Assembly for the affected color (REP 9.10).

Check power to LPH from MD PWB. **There is +5v at P/J532.**

Y **N**

Check power to MD PWB from MCU PWB. **There is +5v at P/J452.**

Y **N**

Check power to MCU PWB from +5VDC LVPS. **There is +5v at P/J401.**

Y **N**

Check power from +5VDC LVPS. **There is +5v at P/J510**

Y **N**

Go to +5VDC Power RAP.

Check wire harness between the LVPS and MCU PWB for damage. Repair or replace as required (REP 9.11).

Replace the MCU PWB (REP 1.4).

Replace the MD PWB (REP 1.5).

Go to IQ45.

IQ15 Tapes Not Peeled RAP

The highlight portions are too obvious. The whole paper seems to be filled with lines.

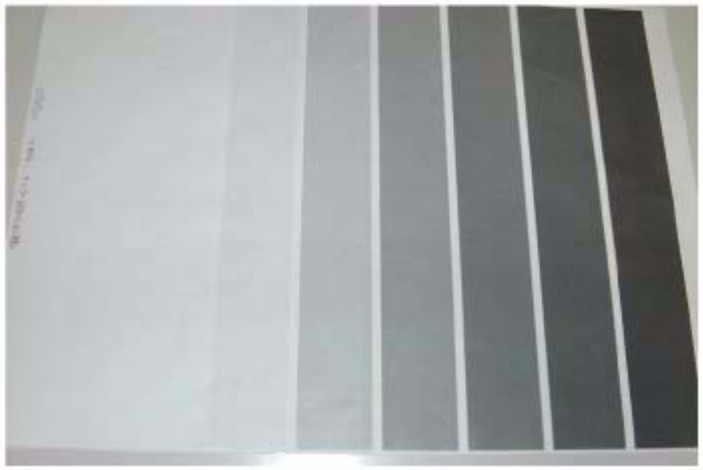

Figure 1 Tapes Not Peeled Defect Sample

Initial Actions

1. Check customer print to compare problem to Figure 1.
2. Check if any protective tape remains on the LPH. Remove the LPH Assembly. (REP 9.10)

Procedure

Ensure no protective tape remains on the LPH. Peel off the protective tape.

NOTE: *Do not forget to check for and peel off any tape when replacing the LPH (spare part).*

IQ16 Charging Roll Pitch White Lines (type 1)

This image quality defect occurs in the BCR and Photoreceptor NIP sections. The defect may appear as thin white lines in the Inboard-to Outboard direction on the highlight portion at the Charging Roll Pitch as in Figure 1.

This problem may occur with New Drum CRU that has been stored for a long time. It also occurs when the MC has rested in a high temperature environment for a long time. (Halftone image)

Figure 1 Charging Roll Pitch White Lines (type 1) Defect Sample

Procedure

Print test pattern -11 (dC612). **Lines with 38mm pitch appear in the Inboard-to Outboard direction.**

Y **N**

Have the customer re-evaluate affected jobs and re-send.

1. Make approximately. 10 to 30 printouts.
2. Verify that no lines appear.

IQ17 Charging Roll Pitch White Lines (type 2)

If contamination from the Cleaner roll gets stuck to the BCR, the resistance on the BCR gets reduced and may cause the appearance of white stripes in the FS direction. This may occur when the machine has been resting for a long time or in the early mornings as in Figure 1.

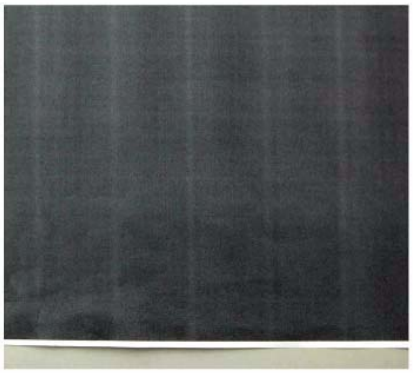

j0wa31014

Figure 1 Charging Roll Pitch White Lines (type 2) Defect Sample

Procedure

NOTE: *If the machine has been resting (Wait state) or the machine is being utilized in the early morning, this image quality defect will occur because the BCR and Photoreceptor NIP sections are not properly warmed up to operating temperature. Printing 10 to 30 prints will be sufficient to allow the BCR and Photoreceptor to warm up to operating temperature.*

1. Check customer print or Print test pattern -9 (dC612) Make approximately. 10 to 30 printouts.
2. Verify that no lines appear.I f the problem persists after you make approximately. 10 to 30 printouts, this may be a case of "IQ-15 White Stripes". Perform the solution in IQ-15. → This disappears over time
3. Check dC120 and/or dC122 for Chain 094-xxx Faults.
4. Perform 2nd Transfer Voltage Offset Adjustment (see dC909).
5. Replace:
   - HVPS (Dev/BCR)7525/7530/7535 (REP 1.7).
   - HVPS (BCR) 7545/7556 (REP 1.7)
6. Replace the 2nd BTR (CRUs and Consumables).
7. Replace the BTR/Detack HVPS (REP 1.1) (PL 6.2).

IQ18 Photoreceptor Pitch Color Lines

Vibrations during the Drum CRU transportation may cause scrapes and friction in the BCR and the Photoreceptor, resulting in leftover electrostatic memory on the Photoreceptor that generates thin white streaks in the Inboard-to Outboard direction on the highlight portion at the Photoreceptor Pitch. This problem may occur right after the replacement of Drum CRU. (Occurs at Halftone image quality).

j0wa31015

Figure 1 Photoreceptor Pitch Color Lines Defect Sample

Initial Actions

Check customer print or Print test pattern -9 (dC612), check that lines with 94mm pitch appear in the Inboard-to Outboard direction as in Figure 1.

Procedure

Make approximately. 10 to 30 printouts.

- If the fault lies with the Y, M, or C Drum, print full-color images.
- If it is with the K Drum, print either full-color or B/W images.

IQ19 Background on Gloss RAP

Use this RAP when the background level on Gloss paper is worse than the background level of Plain paper.

Initial Actions

Verify that the background level is worse than that on Plain Paper.

NOTE: *Increasing the value of the NVM from the default will sacrifice the reproducibility of fine lines and highlight sections.*

Procedure

1. Changing these NVM values should be performed only for the color exhibiting the problem.
   - 753-054: Reference CF [Y]
   - 753-055: Reference CF [M]
   - 753-056: Reference CF [C]
   - 753-057: Reference CF [K]
2. Change the NVM for the target color from “110” (default value) to “120” if high background was observed when printing onto coated paper.
3. After changing NVM, power Off/On the machine. Enter the Diagnostics mode and execute ProCon On Print (ADJ 9.7).
4. Check the image quality on the test print (coated paper).
5. If the image quality is good, then the procedure is completed.
6. If the image quality is still not good, then change the NVM value to “130”. Power Off/On the machine. Enter the Diagnostics mode and execute ProCon On Print (ADJ 9.3).
7. Check the image quality on the test print (coated paper).
8. If the image quality is good, then the procedure is completed.
9. If high background becomes worse after changing the NVM, return the NVM back to it’s original (Default) value.

IQ20 Toner Empty Detection Color Lines RAP

At Pre Near or Near Empty state, if a customer had removed the Cartridge and knocked on it to collect the toner towards the exit in attempt to use the very last bit of toner, it may cause color stripe deterioration.

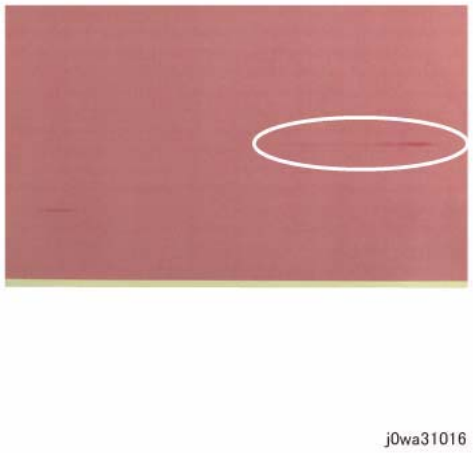

Figure 1 Toner Empty Detection Color Lines Defect Sample

Initial Actions

Check customer print to verify color stripe deterioration as in Figure 1.

Procedure

Use a new Cartridge.

IQ21 Toner Droplet Contamination RAP

This RAP troubleshoots for contamination consisting of random spatters of toner in sizes of a few millimeters.

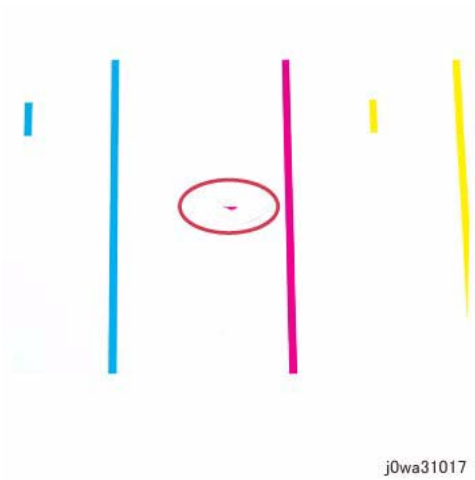

Figure 1 Toner Droplet Contamination Defect Sample

Initial Actions

Check customer print to verify contamination consisting of random spatters of toner in sizes of a few millimeters as in Figure 1.

Procedure

Clean the upper cover and trimmer cover of the Developer Housing Assembly (REP 9.14).

IQ22 Smear on Heavyweight RAP

When the lead edge of paper reaches the Secondary Transfer, it immediately increases the Secondary Transfer section load and causes the IBT Drive Roll speed to decrease. This change in speed changes the difference in relative speed between the Photoreceptor and the Transfer Belt surface in the K-color Primary Transfer section, hence creating a smear (distorted image).

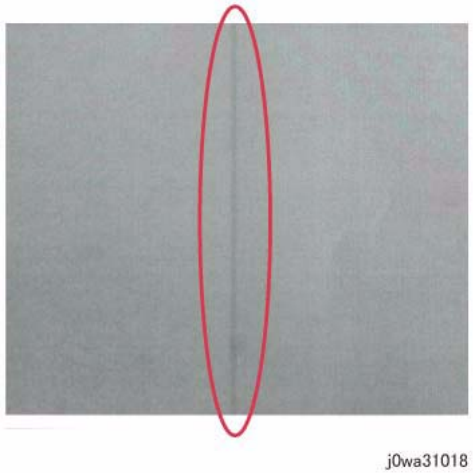

Figure 1 Smear on Heavyweight Defect Sample

Initial Actions

Check customer print to verify smear or print test pattern -10 (dC612), and check for a smear as in Figure 1.

Procedure

NOTE: *Changing NVM Read/Write (dC131) location [740-130] (Heavyweight Smear Countermeasure SW) from **1** to **0** causes the IOT to operate in the FC mode, regardless of the color mode setting (Color Priority, B/W Priority, ACS) in the Controller, when performing monochrome printing for Extra Heavyweight and HW Gloss in 35-sheet models and Extra Heavyweight, HW Gloss, and Transparencies in 25-sheet models.*

Change the value of NVM Read/Write (dC131) location [740-130] (Heavyweight Smear Countermeasure SW) from **1** to **0**.

IQ23 Rough Black RAP

On paper that is not flat, has a rough surface, or has poor hue, the toner is not transferred onto paper well.

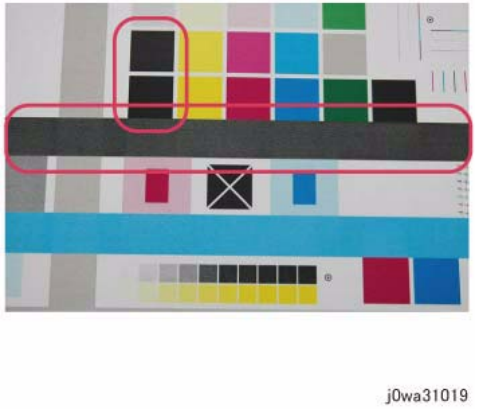

Figure 1 Rough Black Defect Sample

Initial Actions

Check customer print to verify that the same problem does not occur for the same job printed on paper that is flatter, smoother, or has a better hue as in Figure 1.

Procedure

Go to **2nd Transfer Voltage Offset Adjustment** (dC909).

IQ24 Moist Paper Transfer Failure RAP

The resistance is lowered because the paper is moist. The K color contains carbon that causes it to have larger dielectric loss, and hence it requires a different electrical field from the other colors. There is no latitude because the difference in required electrical field between multi color and K color is larger than the difference between paper resistance and toner resistance.

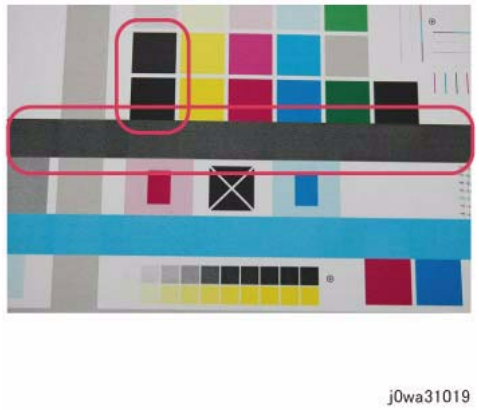

Figure 1 Defect Sample

Initial Actions

Print using freshly unpacked paper of the same type as the defective paper, then compare the roughness and blank areas for K color and single color as in Figure 1.

Procedure

Be sure to use freshly unpacked paper.

IQ25 Toner Contamination at Lead/Trail Edge RAP

Toner contamination suddenly appears on the 2nd BTR or Belt (background) while in color mode.

Lead Edge: Paper lead edge contacts the Belt when it is transported from Registration to Transfer.

Trail Edge: The trail edge of Paper that loops between the Transfer-Fusing sections, at the release of the Secondary Transfer NIP, moves opposite to the feed direction and contacts the BTR surface, or bounds up and contacts the Belt

j0wa31020

Figure 1 Toner Contamination at Lead/Trail Edge Defect Sample

Initial Actions

Run 1 Sided print to check on which side (transfer side or side 2) does the contamination exists as in Figure 1.

Procedure

NOTE: *Since increasing the charge voltage for background area causes the repeatability of fine lines to deteriorate, take the balance into consideration.*

1. Access UI Diagnostics. (UI Diagnostic (CSE) Mode).
2. Change the value of dC131 NVM Read/Write location [753-054 to 753-057] from “110” (default value) to “120” for the target color.
   - 753-054: Reference CF [Y]
   - 753-055: Reference CF [M]
   - 753-056: Reference CF [C]
   - 753-057: Reference CF [K]
3. After changing NVM, power off/on the machine.
4. Execute ProCon On Print (ADJ 9.3) on coated paper. If the image quality is good, go to Final Actions.
5. If the image quality is still not good, change the value of NVM locations 753-054 to 753-057 from “120” to “130” for the target color.

   NOTE: *By changing NVM, fine line reproduction and highlight reproduction may get worse. (worse when the value is changed to “130”)*

   - 753-054: Reference CF [Y]
   - 753-055: Reference CF [M]
   - 753-056: Reference CF [C]
   - 753-057: Reference CF [K]
6. If high background becomes worse after changing NVM, put NVM back to original.

IQ27 Trail Edge Transfer Failure RAP

This RAP troubleshoots for an image defect that looks like a rough image or blank area (in Lead Edge-to Trail Edge direction) that occurs for images within 10mm (including margins) from the paper trail edge.

The paper trail edge, after the Secondary Transfer NIP has been released, bounded up due to the fusing stroke effect and re-transfers to the Transfer Belt.

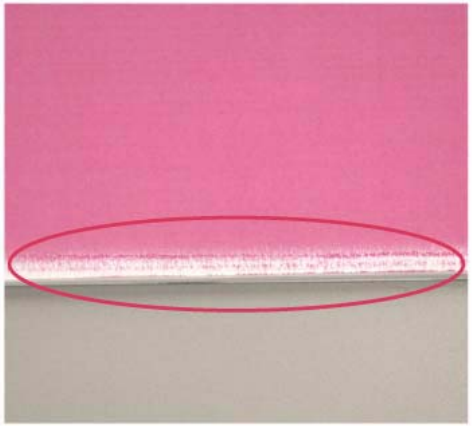

Figure 1 Trail Edge Transfer Failure Defect Sample

Initial Actions

Check customer print to verify an image defect that looks like a rough image or blank area (in Lead Edge-to Trail Edge direction) that occurs for images within 10mm (including margins) from the paper trail edge as in Figure 1.

Procedure

There is no corrective action.

IQ29 Color Lines RAP

If customer uses paper which causes a lot of paper debris and also run long run-length jobs, paper debris will adhere to the IBT cleaner, which may result in poor cleaning of residual toner on the Transfer Belt. Transfer Belt reverse rotation is needed to remove such residual toner from the Transfer Belt.

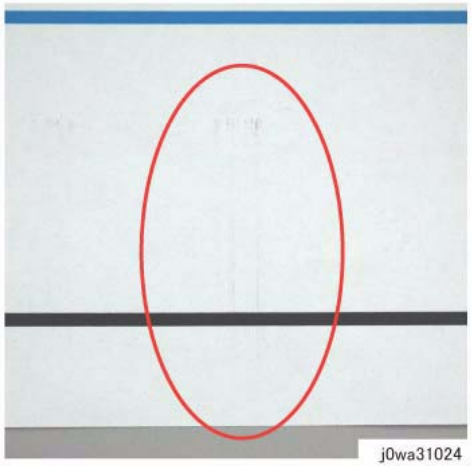

Figure 1 Color Lines Defect Sample

Primary Causes

Presence of paper dust in between the Transfer Belt and the Transfer Belt Cleaner Assembly blade causes poor cleaning.

Initial Actions

1. Check customer print to verify presence of paper dust in between the Intermediate Belt Transfer and the Transfer Belt Cleaner Assembly blade as in Figure 1.
2. Remove the Transfer Belt Cleaner Assembly to check if foreign substances exist at the tip of the cleaner blade. (REP 9.1)

   If check is true, clean the tip of the Transfer Belt Cleaner Assembly blade.
3. If the side that is opposite to the Intermediate Belt Transfer has toner scrapes or if the color lines disappear after the tip of the blade is cleaned, Follow the procedure below.

Procedure

NOTE: *By default, NVM 746-020 is "0" Transfer Belt reverse rotation is only performed at end of job (e.g. if a job is for 1000 pages, Transfer Belt reverse rotation is performed after printing 1000 pages).*

When NVM 746-020 is "1" Transfer Belt reverse rotation is performed after a number of pages, determined by the value in location 746-125 (default is 7000 = 70 pages). NVM location 746-021 controls the length of time that the transfer belt is reversed. The machine always cycles down after printing 70 pages and performs Transfer Belt reverse rotation to remove residual toner on the Transfer Belt.

1. Change the dC131 NVM Read/Write location [746-020] to "1" to change the frequency and amount of Transfer Belt reverse rotation.
2. If Transfer Belt reverse rotation needs to be performed more often, then the value in NVM 746-125 should be a smaller value.

IQ30 Transfer Blank Areas (Partially Moist Paper) RAP

Ripples in partially moist paper becomes wrinkles in the Transfer section, causing blank areas to appear.

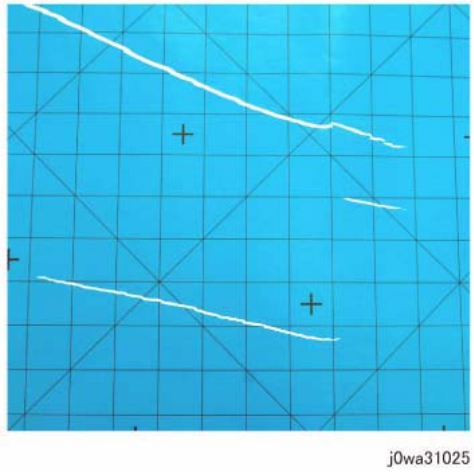

Figure 1 Transfer Blank Areas (Partially Moist Paper) Defect Sample

Initial Actions

Check customer print to verify paper that has uneven moisture content as in Figure 1.

Procedure

Replace the paper in use with fresh, dry paper of the correct specification. Ensure that the loaded media matches the UI or print driver settings.

IQ31 Nip Marks RAP

When using transparencies, slight lines may appear at the Fuser Heat Roll Pitch as in Figure 1.

j0wa31026

Figure 1 Nip Marks Defect Sample

Procedure

No action required. This occurs when a transparency is the first thing printed after starting up a machine that has been left idle for a few days without heating up.

IQ32 Moisture RAP

Distorted image may appear at one side or both sides of the paper trail edge when printing halftone fill as in Figure 1.

j0wa31027

Figure 1 Moisture Defect Sample

Procedure

1. No special actions required.
2. Try not to print in the early mornings.
3. Ask the customer to use fresh paper whenever possible.

IQ33 Low Image Density RAP

This RAP troubleshoots the causes of output images showing image density lower than specification

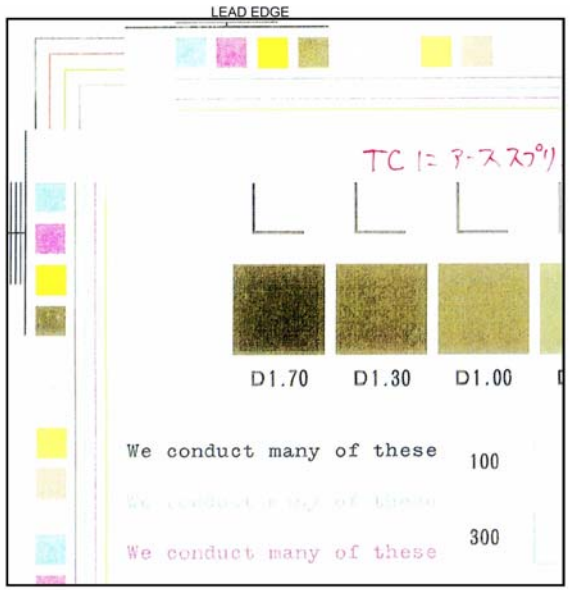

Figure 1 Low Density Defect Sample

Initial Actions

1. Check customer print to verify images showing image density lower than specification as in Figure 1.
2. Use the LPH Cleaner to clean the LPH (PL 2.1).
3. Replace the paper in use with fresh, dry paper of the correct specification
4. Determine if the Drum Cartridge or any of the Toner Cartridges are approaching end-of-life. Replace if necessary.
5. Perform Max Setup (ADJ 9.16). If this does not resolve the problem, continue with this RAP.

Procedure

Print Test pattern -7 (dC612). **The defect involves a single color.**

Y N

Print Test pattern -7 (dC612). Open the Front Door in the middle of the print job (approximately 7 seconds after selecting **Start**). Extend the IBT. **There is a good toner image on the Transfer Belt.**

Y N

Clean the LPH and check for misalignment.

A B

Check the 2nd BTR for damage or incorrect installation. Check the Backup Roll bias. If the problem continues, replace 2nd BTR Assembly . If this does not resolve the problem, replace the Transfer Belt (PL 6.3).

Swap the affected Drum Cartridge with an adjacent unit. Print Test Pattern 7 **The defect moved to the new color.**

Y N

Replace the Developer for the affected color (PL 5.2). If this does not resolve the problem, replace the ATC Sensor for the affected color (PL 5.2).

Replace the Drum Cartridge (see CRUs and Consumables in Section 6).
If the problem continues, replace the LPH Assembly for the effected color CMYK. (REP 9.10).

IQ34 Wrinkled Image RAP

Areas of 11x17 in./A3 prints have distinctive “worm track” patterns in the image, and/or wrinkles in the paper itself.

NOTE: *The following factors will increase the likelihood of this problem:*

- *Lighter weight papers.*
- *Larger papers.*
- *Short-grain 11x17 in / A3 papers.*
- *Old (not freshly opened) paper.*
- *2 sided printing*
- *Fuser with 1100 or more hours of operating life.*

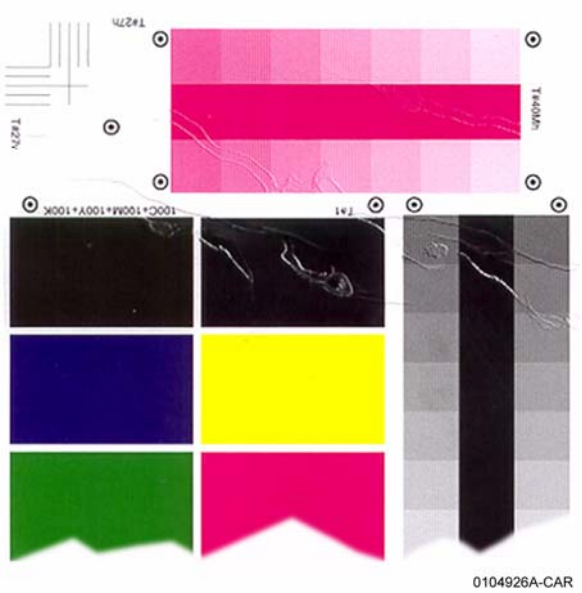

Figure 1 Wrinkled Image Defect Sample

Initial Actions

1. Check customer print to verify distinctive “worm track” patterns in the images in Figure 1.
2. Make the following modifications to the copy/print jobs if possible:
   - Ensure that the paper is dry and fresh.
   - Use heavier weight paper
   - Use long-grain paper.

Procedure

If the problem persists after performing the Initial Actions, replace the Fuser (PL 7.1).

IQ36 IOT Background RAP

Incorrect Electrostatics, high TC, faulty ADC Sensor

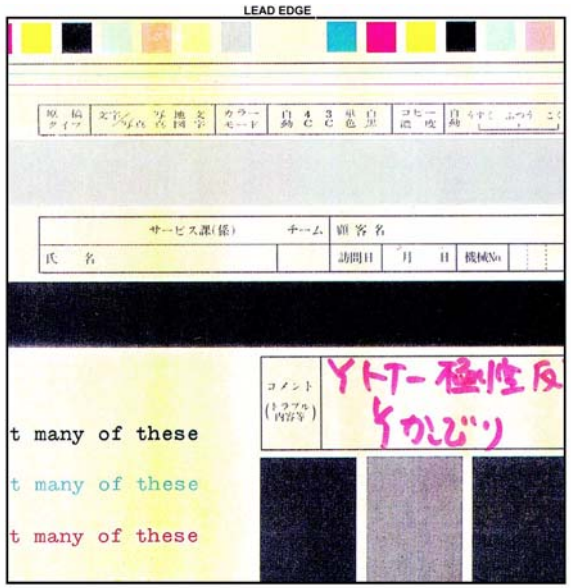

Figure 1 Background Defect Sample

Initial Actions

1. Check customer print to verify image defect as in Figure 1.

NOTE: *Some background is unavoidable on certain media, such as heavyweight paper and transparencies. Ensure that the customer selects the correct settings on the UI and print driver.*

2. Perform Max Setup (ADJ 9.16). If this does not resolve the problem, continue with this RAP.

Procedure

WARNING

Use extreme care when working near electrically energized components and high voltage cables that are exposed during troubleshooting or repair. Contact with electrical components or high voltage cables represents a shock potential that could result in serious personal injury.

DANGER: Faire très attention en travaillant près des éléments sous tension et des câbles HT qui sont exposés pendant le dépannage. Tout contact avec les éléments électriques ou les câbles haute tension représente un risque de choc et de graves blessures.

AVVERTENZA: Fare estrema attenzione quando si lavora vicino a componenti sotto tensione e cavi elettrici esposti durante l'intervento. Il contatto con componenti sotto tensione o cavi elettrici comportano un serio pericolo di scossa elettrica e gravi ferite.

VORSICHT: Während dem Reparieren oder der Fehlerbehebung muss man beim Umgang mit elektonisch aufgeladenen Bauteilen und Hochspannunsgleitungen äußerste Vorsicht walten. Beim Umgang mit elektrischen Bauteilen und Hochspannungsleitungen erhöht sich das Unfallrisiko. Äußerste Vorsicht ist geboten.

AVISO: Use extrema precaución altrabajar cerca de componentes cargados eléctricamente y cables de alto voltaje que estén expuestos mientras soluciona problemas o realiza reparaciones. Todo contacto con componentes eléctricos o cables de alto voltaje representa un peligro que puede ocasionar daños personales graves.

The problem occurs only when scanning or copying with the DADF.

Y N

The problem is Single Color Background.

Y N

Examine the face of the ADC Sensor. **The ADC Sensor is clean.**

Y N

Go to the 392-651 ADC Sensor Fail RAP to troubleshoot the ADC Sensor Solenoid.

Examine the Transfer Belt for excessive dirt, damage, or uncleaned toner. **The Belt is clean.**

Y N

Check the Transfer Belt Cleaner for damage or wear. Clean or replace as required.

Check the Developer bias circuit for -600VDC (Default nominal). **Developer Bias is present.**

Y N

Go to the following BSDs and check the wiring from the MCU PWB to the Deve HVPS:

- BSD 9.15 Development (Y) (7525,7530,7535)
- BSD 9.16 Development (Y) (7545,7556)
- BSD 9.17 Development (M) (7525,7530,7535)
- BSD 9.18 Development (M) (7545,7556)
- BSD 9.19 Development (C) (7525,7530,7535)
- BSD 9.20 Development (C) (7545,7556)
- BSD 9.21 Development (K) (7525,7530,7535)
- BSD 9.22 Development (K) (7545,7556)

If the wiring is OK, replace the Deve HVPS power supply (PL 5.3) .
If the problem still exists, replace the MCU PWB (PL 18.2B) .

If Developer Bias is OK, replace the Transfer Belt (PL 6.3). If this does not solve the problem, replace the 2nd BTR (PL 14.2).

Check the following:

- Check the end-of-life counter for the Toner Cartridge and Drum Cartridge for the affected color. Replace if at or near end-of-life (see CRUs and Consumables in Section 6).
- If the problem continues, examine the Developer Housing for the affected color. Check for toner bridging, uneven brush, or loose High Voltage terminals. Clean, repair, or replace as required (PL 5.2).

White reference settings for CVT mode may be incorrect. Enter Diagnostics dC131 and check that the following NVM locations are set as indicated:
715-097 = 104
715-098 = 105
715-099 = 106
If NVM settings are correct, upgrade to the latest software. If problem still exists, the NVM may be corrupt; initialize the NVM:

1. Enter Diagnostics dC301.
2. Select [Copier] (left), [Scanner] (center), [All] (right).
3. Select [Initialize] and exit Diagnostics.
4. Switch the power off, then on.
5. **See Eureka tip 1078835 if software level is 061.120.200.35301 or higher, for reporting**. Make sure to complete and send the form attached to the tip.

IQ38 Color-to-Color Misregistration RAP

Failure of the IBT “walking” from rear to front or front to rear.

Mechanical problem in the IBT Assembly.

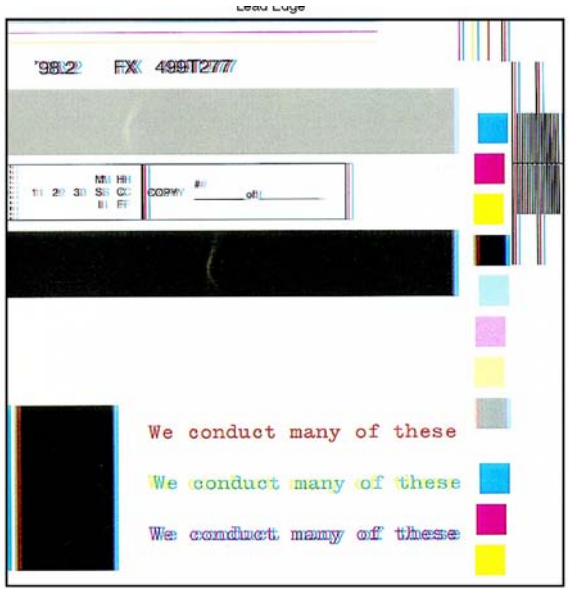

Figure 1 Color Misregistration Defect Sample

Initial Actions

1. Check customer print to verify color to color misregistration as in Figure 1.
2. Adjust the color registration (ADJ 9.6). If the problem remains, continue with this procedure

Procedure

The problem involves a single color.

Go to Registration Control Setup Cycle (ADJ 9.10).

IQ39 Skew/Misregistration RAP

This RAP is used when Skew, System Registration, or Magnification are out of specification. For Color-to-Color-Misregistration, go to the RAP IQ38 RAP.

Initial Actions

Load some new, dry 24 lb. 11X17/A3 Xerox COLOR Xpressions (NASG), or 90 GSM Colortech + (ESG) into each paper tray (use 8.5X11/A4 in Tray 1). Make 3 full color copies from each paper tray. Mark the appropriate paper tray on these copies.

Procedure

The problem is still present when using the proper paper.

Y N

Explain to the customer that new, dry, 24 lb. Xerox COLOR Xpressions (NASG), or 90 GSM Colortech + (ESG) paper is the specified paper to use.

The problem occurs only in the printer mode.

Y N

The defect occurs when the document is manually registered on the platen glass.

Y N

Ensure that the Document Transport Belt is clean. Check the Document Handler Adjustments. If the problem continues, check the DADF drive rolls and pinch rolls for wear or glossing.

The problem is Skew.

Y N

The problem is Misregistration.

Y N

Adjust the IOT Lead Edge/Side Edge Registration (ADJ 9.1).

Enter dC612 (Test Pattern Print), select Pattern 3. **Misregistration is present on the copy**

Y N

Adjust the IOT Lead Edge/Side Edge Registration (ADJ 9.1), then the IIT Lead Edge and Side Edge Registration (ADJ 6.2 and ADJ 6.3).

The defect occurred on copies from all five paper trays.

Y N

Check the IOT Lead Edge/Side Edge Registration (ADJ 9.1) for that tray.
Check the feeder for the affected tray for wear, slipping, damage, or contamination.

- Tray 1 Feeder (PL 9.3)
- Tray 2 Feeder (PL 10.3)
- Tray 3 Feeder (PL 10.5)
- Tray 4 Feeder (PL 10.7)

Registration varies from copy to copy.

Y N

Go to ADJ 9.1, Lead/Side Edge Adjustment.

A B C

A B C

Check the components in the Registration Transport Assembly (PL 15.1) for wear, slipping, damage, or contamination. Clean/replace as required

The defect occurred on copies from all five paper trays.

Y N

Check the components in the Registration Transport Assembly (PL 15.1) for wear, slipping, damage, or contamination. Clean/replace as required

Check the IOT Lead Edge/Side Edge Registration (ADJ 9.1) for that tray.

Check the feeder for the affected tray for wear, slipping, damage, or contamination.

- Tray 1 Feeder (PL 9.3)
- Tray 2 Feeder (PL 10.3)
- Tray 3 Feeder (PL 10.5)
- Tray 4 Feeder (PL 10.7)
- Tray 5 Feed Assembly (PL 13.3)

The problem occurs on all jobs.

Y N

Have the customer re-evaluate affected jobs and re-send.

Refer to the DFE Service Guide.

IQ40 Process Direction Bands, Streaks, and Smears RAP

Contamination of LPH, damage to or contact with Transfer Belt or Drum Cartridge.

Clog in Developer Housing, malfunction of Belt Cleaner, contaminated LPH.

Figure 1 Streak Deletion Defect Sample

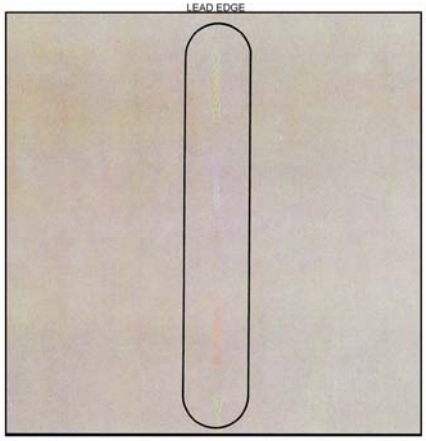

Figure 2 Streak Defect Sample

Initial Actions

- Check customer print to verify Process Direction Bands, Streaks, and Smears as in the following:

- Figure 1
- Figure 2

- Clean the Transfer Belt Cleaner. Check for wear or damage
- Clean the Fuser. Check the metal stripper baffle in the Fuser for contamination.
- Check the 2nd BTR and the Detack Sawtooth (DTS) for Toner contamination.

Procedure

NOTE: *The repetition rate for Transfer Belt defects varies considerably, depending on paper size and mode of operation. The defect may appear as frequently as every 3rd sheet, or may only occur every 14 sheets.*

The defect occurs in approximately the same position on multiple prints.

Y N

If the defect occurs intermittently, examine the Developer Housings for evidence of toner clumping. If clumping is found, replace the Developer (REP 9.15) if this does not resolve the problem.

The defect is a full-width (LE - TE) Figure 1.

Y N

Remove the Fuser Assembly. Examine the Heat Roll for damage or contamination. Clean or replace as required (PL 7.1).

Check the Transfer Belt Cleaner (PL 6.1). Ensure that the blade and the Mylar backing are free from damage. Check that the auger turns freely. Clean repair or replace as required

Check the Developer Housing (PL 5.2). Repair or replace as required. (REP 9.14)

If the problem is related to a single color, replace the Drum Cartridge (see CRUs and Consumables in Section 6).

Enter dC612 (Test Pattern Print). Select Test Pattern 9. Print a 40% coverage pattern for each single color. **The defect is present for all colors.**

Y N

- Use the LPH Cleaner to clean the LPH.
- Check Drum Cartridge for affected color. Check for damage or contamination to the BCR.
- Replace the Developer (REP 9.15) for the affected color. Check the housing for damage or toner clumping.

Remove the Transfer Belt Cleaner (PL 6.1). Inspect the cleaning blade and Mylar seal for damage. Clean or replace as required.

If the Transfer Belt Cleaner is OK, check the Transfer Belt (PL 6.3) for damage or contamination. Ensure that there is no debris or loose wiring, etc. in contact with the belt. Clean or replace as required.

IQ41 Unfused Copy/Toner Offset RAP

Initial Actions

- Replace the paper in use with fresh, dry paper of the correct specification.
- Check the post-Fuser transport areas for dirt.
- Ensure that the media being used matches the settings on the UI screen or print driver. Using the next heavier setting may resolve the problem.
- If the Key Operator/Administrator has configured certain trays for a specific type of media, ensure that the specified media is actually loaded in those trays.

Procedure

Check the following:

- Check the Sensor Assembly (PL 6.2) for contamination or incorrect mounting. Clean, repair, or replace as required.
- Check the Fuser (PL 7.1) for damage, toner offsetting, paper wrap, or incorrect installation. Clean or replace as required.

After resolving the problem, make 10 blank copies (letter size, Black mode) to clean residual toner from the Fuser Heat Roll and Fuser Belt. If the problem persists, or if Lead Edge contamination is present, remove the Fuser Exit Chute (PL 7.1) and clean any toner or paper residue from the Exit Chute and the metal stripper baffle.

IQ42 Repeating Bands, Streaks, Spots, and Smears RAP

Damage, density variation, or deletions caused by rotating component. Spacing equal to effective circumference of part.

Faulty Photoreceptor/Developer Housing gear or bearing problem.

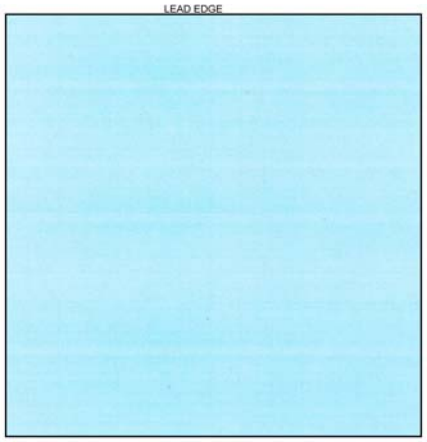

Figure 1 Repeating Defects Sample Image

Figure 2 High Frequency Bands Defect Sample

Initial Actions

Check customer print to verify Repeating Bands, Streaks, Spots, and Smears as in the following:

- Figure 1
- Figure 2

Procedure

Measure the distance between the repeating defects. Locate the distance on the table below. Perform the indicated repair actions

Table 1 Repeating Defects

Repetition spacing	Component(s)	Repair Actions
<4 MM.	High Frequency Banding	
95 MM.	Photoreceptor	Single Color - Replace the Drum Cartridge (see CRUs and Consumables in Section 6).
38 MM.	BCR	
56 MM.	Developer Mag Roll	Check Developer roll bias for floating or shorting out. Replace Developer Housing (PL 5.2) if required.
84 MM.	Fuser Heat Roll	Ensure correct paper type is set for the actual paper in the paper tray. Remove the Fuser Assembly. Check the Heat Roll for damage (nicks, wear, or cuts) or contamination. Clean or replace as required (PL 7.1).
94 MM.	Fuser Pressure Belt	All Colors - Remove the Fuser Assembly. Check the Heat Roll for damage (nicks, wear, or cuts) or contamination. Clean or replace as required (PL 7.1).
25mm	BTR 1 Roll	
55 MM.	BTR 2 Backup Roll BTR 2 Roll	Check the 2nd BTR Assembly for damage or contamination. Clean, repair or replace as required . Replace the Transfer Belt (PL 6.3).
81 MM.	IBT Drive Roller	

IQ44 Spots RAP

Initial Actions

Ensure that the paper in use is fresh, dry, and within specification for weight and quality.

Check print driver and copier control panel settings to ensure the media is being un in the proper mode.

Compare the spots against the samples in the Image Quality Defects supplement. If the defect matches the Debris Centered Deletions sample, go to the RAP IQ39 RAP.

Procedure

The defect occurs in Copy mode only.

Y N

The spots occur at a fixed interval on each print.

Y N

The spots occur in the same location on every letter size print.

Y N

NOTE: *The repetition rate for Transfer Belt defects varies considerably, depending on paper size and mode of operation. The defect may appear as frequently as every 3rd sheet, or may only occur every 14 sheets.*

The defect occurs in approximately the same position on multiple prints.

Y N

The problem is Fuser offset and/or lead edge smears or spots.

Y N

CAUTION

Do not use a vacuum cleaner or any solvents in the following step. Damage to the Transfer Belt Cleaner will result.

Remove the Transfer Belt Cleaner (REP 9.1). Carefully clean the cleaning blade and the Mylar shield with a soft brush or a lint free cloth. Brush away any accumulation of toner on the foam seal and the outside surfaces. Wipe the surface of the Transfer Belt with a lint free cloth.

If the problem continues, replace the Transfer Belt Cleaner (PL 6.1).

Go to the RAP IQ31 RAP.

Check the Transfer Belt (PL 6.3) for dirt or damage. Clean or replace as required.

Check the Drum Cartridge for dirt or damage. Clean or replace as required (see CRUs and Consumables in Section 6).

Go to the RAP IQ42 RAP.

Ensure that the original is free from the defect.
Clean the Platen Glass and Lens.

IQ45 Missing Colors RAP

One or more of the primary (YMCK) colors is missing from the image.

Procedure

Use the LPH Cleaner to clean the LPH.

If the problem continues, replace the LPH Assembly for the effected color CMYK. (REP 9.10)

IQ46 Background on Coated Paper

Compared to Plain Paper, background is a lot more visible on Coated Paper.

Paper types with better surface flatness (better transfer ability) and better toner absorption ability has more stress.

Initial Actions

1. Verify that the background level is worse than that on Plain Paper.

Procedure

1. Increase the background voltage by 10 to 20V to reduce background on the Drum. However, this will sacrifice the reproducibility of fine lines and highlight sections.

Adjust the background voltage. The default voltage is 600V. The Adjustment NVM Read/Write (dC131) locations are:

- NVM 753-006 (Y) Dev Bias DC Output Value for Y (0~700:0~700V)
- NVM 753-007 (M) Dev Bias DC Output Value for M (0~700:0~700V)
- NVM 753-008 (C) Dev Bias DC Output Value for C (0~700:0~700V)
- NVM 753-009 (K) Dev Bias DC Output Value for K (0~700:0~700V)

IQ47 Multi Color Transfer Failure

Paper that has had its Side 1 fused has a reduced percentage of moisture content, which increases its electric resistance. Since the resistance in the Secondary Transfer section also increases by lower humidity or over time, the required electrical field may not be attained, especially in the early mornings (low humidity environment).

Due to the characteristics of the EA-ECO Toner, high Rsys (in the early morning low temperature and low humidity environment) requires a transfer voltage for the areas where multiple transfers and MWS cannot be used at the same time. Because the machine is adjusted for Multiple Transfer Priority by default, MWS may be visible from Side 1.

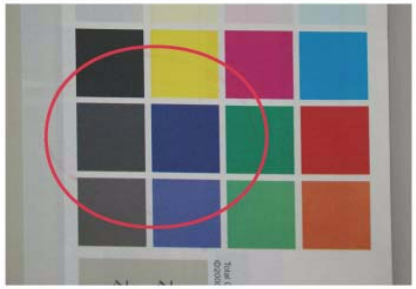

j0wa31021

Figure 1 Multi Color Transfer Failure Defect Sample

Initial Actions

1. Verify that the hue on Side 2 becomes lighter when printing a high density image in a low temperature and low humidity environment as in Figure 1.
2. Change the Secondary Transfer voltage setting up or down, then compare the hue to the paper with defective image.

Procedure

1. Increase the Secondary Transfer voltage by decreasing the single color density or by changing the permissible range for MWS.
2. Apply the Secondary Transfer voltage user offset specifications.

   Reference: UI Operation Instructions for User Offset.

   a. Enter UI Diagnostic (CSE) Mode.

      "Maintenance/Inspection" → "Max Setup" → "User Offset" feature

   b. Select the **Adjustments** tab.

   c. Select **NVM Read/Write** dC131.

   d. While the nominal value is "6", perform variable output (between 1 and 16, low to high voltage) for secondary voltage, and register the optimal value.

   e. Nominal 200V/1 step and NVM Read/Write (dC131) location 747-019/020: Change the step width.

NOTE: *Although the user offset is helpful, it deteriorates multiple transfers because they cannot be used at the same time. Also, because this problem recovers when the Rsys gets lowered as the machine internal temperature rises, the user offset adjustment cannot be recommended. Recovery can be faster by using condensation (plus, Tray Heater).*

IQ48 Lines on Coated Paper (EXIT)

Lines are generated on Side 1 in 2 Sided mode.

When HW Gloss paper is output to Exit 1 using the 2 Sided mode in high temperature/high humidity environment, its Side 1 gets rubbed against the Exit Gate, resulting in lines as in Figure 1.

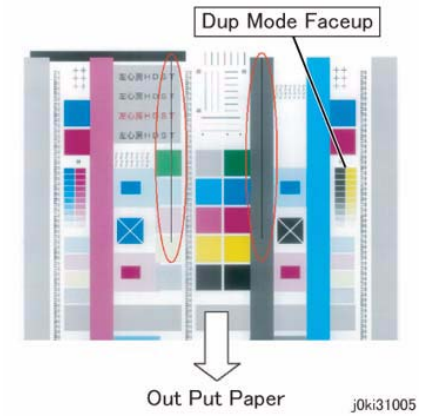

Figure 1 Lines on Coated Paper Defect Sample

Initial Actions

1. Check whether both sides are output to Exit 1.
2. During Side 2 output, check whether the Side 1 output direction is at the Tail Edge.

   If the above two conditions are met, this defect is likely to occur.

Procedure

1. Change the output tray to the Exit 2 Tray or the Side Tray.

- When paper is output to Exit 1 in 2 Sided mode, the convex part of the paper that bowed due to the corrugation of the Exit section makes contact with the Exit Gate, which generates brushed lines from the middle to the Tail Edge on the upper side (Side 1) of the exiting paper.

  This happens when the paper area that bowed due to corrugation makes contact with the Exit Gate.

  Exit Gate

  Output to Exit 1

  Paper output direction

  Upper side of the exiting paper in 2 Sided mode

IQ49 Caterpillar Mark (Transfer)

This is caused by low electric charge in toner.

A bit of changed electricity remains at Side 1 Tail Edge of lightweight paper in the C-Zone.

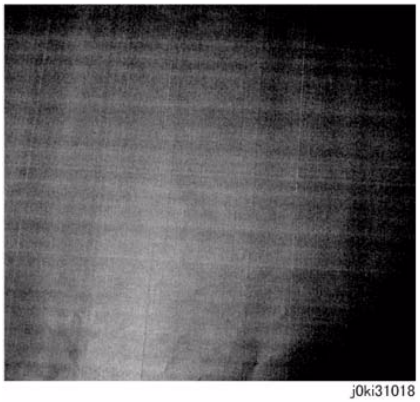

Figure 1 Caterpillar Mark Defect Sample

Initial Actions

1. Compare with the image sample. (Figure 1)

Procedure

1. Lower the TC and increase the primary (same as the heat haze/mock heat haze counter-measure). (IQ51)
2. Because this may get worse during condensation, go through a few dozens of full image 2 Sided sheets to handle it.

IQ50 White Stripes Due to Trimmer Jam (DEV)

When foreign substances such as dirt, dust, toner aggregate (including the case of heated one) exist in the Toner Cartridge, on the Toner Supply Path, or in the Developer Housing Assy and they reach the section between the Developer Roll and the Trimmer, it could obstruct the formation of developer layer.

Initial Actions

1. Clean the LPH.
2. If the white stripes did not disappear, perform the following:

Procedure

1. Scoop and remove the foreign substances by inserting a sheet of paper into the gap between the Developer Roll and the Trimmer.
2. In most cases, the above procedure will not be able to remove the foreign substances. The assured method is to replace the Developer Housing Assy.

IQ51 Heat Haze/Mock Heat Haze

The heat haze/mock heat haze is generated in various places and in different ways.

The heat haze occurs at the place where paper is peeled off from the Transfer Belt as shown in Figure 1.
The toner scatters in small clouds around the Solid Patch.

The mock heat haze occurs when the transported paper rubs against the Holder DTS (Chute at the Transfer EXIT) as shown in the figure, which charges it electrically and causes the toner to scatter at the Lead and Tail edges of the Solid section. This might form streaks in some parts.

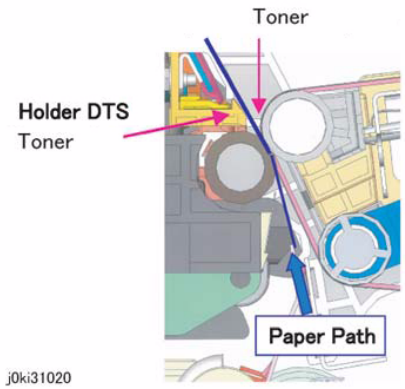

Figure 1 Heat Haze/Mock Heat Haze

Initial Actions

1. Obtain the Chart for Secondary Transfer Voltage Offset Mode to check whether the defect occurs for single K color or multi colors and whether it changes at the secondary voltage.

   CAUTION

   Perform paper (Tray) selection and paper type selection.

2. Adjust Toner Density. Perform checking. If the TC is higher after the installation, lower the TC.

Procedure

1. When a heat haze or mock heat haze occurs during installation, print 25 sheets of test chart, etc. on A3.
2. Increase the secondary voltage.

   Increase the secondary voltage based on the result of 1. (Secondary voltage offset)

   → This is mainly effective for heat haze.
3. Increase the primary transfer current value. Perform the following procedures:

   Corrective action - adjusting the primary transfer current value for toner scattering (mock heat haze) around K color texts

   a. Refer to NVM Read/Write (dC131) location 746-015 (the Environment No. selected based on temperature and humidity) and take note of that value *1.

   *1: This value indicates the machine internal environment (temperature and humidity) and it is stored as an integer value between 1 and 10. The higher the temperature and humidity are, the smaller the value becomes and vice versa.

   b. Change the primary transfer current value (approximate) to the value corresponding to the conditions at which the problem occurs (Model & Output Color + the value in (1) above).
      - Refer to the following table for the NVM address to be changed. (Table 1)
      - Because the machine internal temperature and humidity changes slightly within the day, also change the values before and after the value that was taken note in (1) above (if the value is "5", change "4" and "6" too).
      - Change 103 to 150 for 25/25ppm, 148 to 200 for 35/35ppm, (TBD) for 45/45ppm, or (TBD) for 50/55ppm.

   Example) If this problem occurs for 25/25ppm Full Color print and NVM location 746-015 is a value of "9", change NVM locations 745-405, 406, and 407 from a value of 103 to a value of 150.

Table 1 NVM Address

		746-015 (Environment No.)									
		1	2	3	4	5	6	7	8	9	10
25/25ppm	FC	745-398	745-399	745-400	745-401	745-402	745-403	745-404	745-405	745-407	745-408
	BW	745-408	745-409	745-410	745-411	745-412	745-413	745-414	745-415	745-416	745-417
35/35ppm	FC	745-448	745-449	745-450	745-451	745-452	745-453	745-454	745-455	745-456	745-457
	BW	745-458	745-459	745-460	745-461	745-462	745-463	745-464	745-465	745-466	745-467
45/45ppm	FC	745-498	745-499	745-500	745-501	745-502	745-503	745-504	745-505	745-506	745-507
	BW	745-508	745-509	745-510	745-511	745-512	745-513	745-514	745-515	745-516	745-517
50/55ppm	FC	754-548	754-549	754-550	754-551	754-552	754-553	754-554	754-555	754-556	754-557
	BW	754-568	754-569	754-570	754-571	754-572	754-573	754-574	754-575	754-576	754-577
Initial Value		103		148		169		193		216	
After Change		150		200		220		250		280	

   c. Perform a to b. After performing the test print, refer to NVM Read/Write (dC131) location 746-005 (1st BTR Transfer Bias Last Output Value K) *2 to check that the primary transfer output has changed.

   *2: This stores the current value that was output last. In the case of 25/25ppm, 103 (10.3MicroAmp) is stored before the adjustment and 150 (15.0MicroAmp) is stored after the adjustment.

NOTE: *This adjustment may result in worse ghosting (residual image due to electrostatic record on the photoreceptor).*

Print and check a test pattern. If the level is bad, decrease the value in (2) above.

→ This is effective for heat haze/mock heat haze.

4. Decrease the TC by 1%. Δ ATC target manual correction amount

   Decrease K color by 1%. 752-845: 0 → 35

   Decrease Y color by 1%. 752-842: 0 → 35

   Decrease M color by 1%. 752-843: 0 → 35

   Decrease C color by 1%. 752-844: 0 → 35

   → When the value is changed, the target value for MAX Setup (ADJ 9.16)/Adjust Toner Density also shifts by 35.

CAUTION

Occurrence of both heat haze and mock heat haze are easily influenced by the paper orientation. As final step, copy an image which have solid portions located at various positions to check for them. Especially for the secondary voltage offset chart, only one patch in the area is useful because the Secondary Transfer voltage changes between Lead and Tail edges.

IQ52 Poor Reproducibility of Fine Lines (IOT Image Quality)

The Thin Line Correction Mode is the mode for correcting the poor reproducibility of 600dpi/1200dpi thin lines (Figure 1).

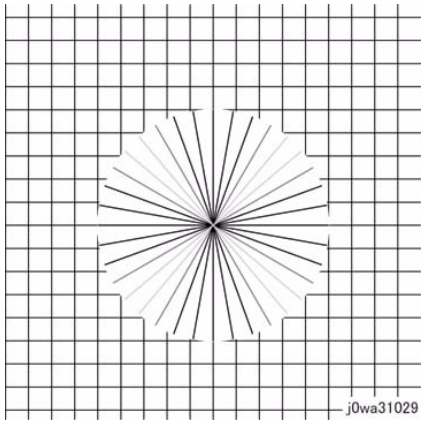

Figure 1 Poor Reproducibility of Fine Lines

Procedure

Because of the dispersion due to the difference in the machines, thin lines, especially slanted ones, tend to break up.

When this happens, use the Thin Line Correction Mode to correct it.

NOTE: *When in use, the Thin Line Correction Mode might cause defects to appear in the images.*

The Thin Line Correction only emphasizes line images and it cannot be used to increase the text density.

1. *Interference in the form of banding in ladder images*
2. *LPH streaks appearing in high temperature environment*

Because of these reasons, keep the adjustment amount as low as possible.

Perform the Thin Line Correction by adjusting the following NVM values:

1. NVM Read/Write (dC131) location 749-006 1200 Only Fine Line Correction - 0: OFF (also perform correction for 600dpi), 15: ON
   (only perform correction for 1200dpi)

   If the Thin Line Correction is also to be performed for 600dpi, use "0". The default value is 15.
2. NVM Read/Write (dC131) location 749-007 Thin Line Correction Switch - 0: Thin Line Correction OFF, 1: Thin Line Correction ON.

   The default value is 0.

3. Thin Line Correction Amount Adjustment (Table 1):

Table 1 Line Adjustment

NVM Address	Contents	Initial Value	Adjustment Range
749-243	Thin Line Correction Amount Y Color	200	140~255
749-244	Thin Line Correction Amount M Color	200	140~255
749-245	Thin Line Correction Amount C Color	200	140~255
749-246	Thin Line Correction Amount K Color	200	140~255

The smaller the value, the more emphasis the thin line gets (amount of exposure is increased).

Amount of exposure is increased by: 30% for 140, 20% for 160, and 10% for 180.
(Default value - Adjustment value)/2 = amount of increased exposure in %.

The recommended value is 160.

4. NVM Read/Write (dC131) location 752-006 Thin Line Correction_ADC_Switch - 0: OFF, 1: ON.

Although this is normally set as 0 (OFF) during use, if the highlight reproduction is over-done, set this to 1 (ON).

Default value is 0.

IQ53 Outboard Deletion in All Colors

These are light areas, faded or deleted, caused by toner buildup on the outboard side of the 1st BTRs.

Figure 1 Outboard Deletion (All Colors)

Initial Actions

1. Compare with the image sample (Figure 1).

Procedure

1. Remove the IBT Assembly (REP 9.2) and Transfer Belt Assembly (PL 6.4, item 5).
2. Clean the 1st BTR rolls (PL 6.4, item 1) in order to correct the problem.
3. Run test prints in order to verify that the problem is corrected.

Image Quality Specifications

The following steps are used to set up the machine for the purpose of making test pattern copies to judge output image color density, balance, and registration.

1. Set the following Customer Mode Settings to the positions listed:
   a. Output Color - Full Color
   b. Original Type - Photo & Text / Halftone
   c. Lighter/Darker - Auto Contrast
   d. Variable Color Balance - Normal
   e. Color Saturation - Normal
   f. Sharpness - Normal
2. Place the Color Test Pattern on the platen. Load 11” X 17 or A3 paper into Tray 1. Make a copy of the test pattern.
3. Compare the copy to the test pattern. Refer to Figure 2 and Table 1 for this evaluation.

Table 1 Color Specifications Check Locations

AREA (Fig. 2)	Check for the Following Results
A	Text Reproduction. Each of the seven sentences in this area are fully reproduced with no missing letters or portions of letters. The sentences are reproduced in Black, Cyan, Magenta, Yellow, Red, Green and Blue.
B	Color Registration. The patterns in location B should be properly registered to provide Black, Red, Green and Blue lines.
C	Front to Rear Density. The density of both the low density and high density bands should be uniform from front to rear. This can be tested by folding the copy in the center and comparing the front side of the copy to the rear side of the copy at location C. Both the high density and low density locations should exhibit even front to rear density.
D	Color Gradation. This area should exhibit a decreasing density of each of the colors from 100% density to 5% density. In a properly adjusted machine, the 10% patches should be visible and the 5% patches should be barely visible or not visible on the test pattern copy (except for the bottom row).
E	Routine Color. Location E represents three general tests for the machine to reproduce colors common to customer originals. Location A is a general skin tone test. Location B represents the color of grass or other common foliage. Location C represents the color of the sky.
F	Photo Gradation. Location F is not used for any copy quality evaluation on this product.
G	IIT Calibration Patches. These patches are scanned for IIT Calibration during the dC945 IIT Calibration portion of Max Setup.
H	100 Lines/Inch Image. A Moire defect will show on this image. Moire on a 100 Line/Inch image is within specification.
I	175 Lines/Inch Image. This image is used to test for Moire. Depending on the degree of the defect, moire seen on this image should be considered out of specification.

Registration and border deletions are checked using the Step Scales on the Geometric Test Pattern, an example of which is shown in Figure 1. All of the scales are 20mm in height, and are made up of four 5mm steps. Step 1 will be described as at the top of the Step Scale, and Step 4 will be described as at the bottom.

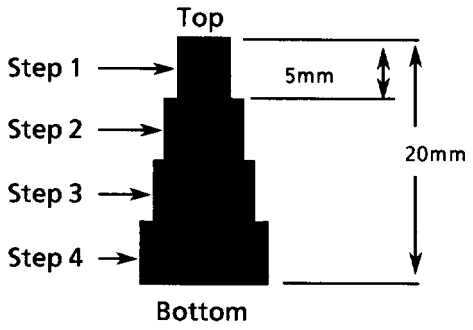

Figure 1 Step Scales

Each Step Scale is positioned for a particular paper size and orientation. Table 2 indicates the appropriate Step Scales to use for the various paper sizes, orientations and measurement locations.

Table 2 Geometric Checkout - Step Scale Data.

Paper Size	Orientation	To check:	Step Scales to use (refer to Figure 1)
11x17	SEF	Lead Edge Side Edge Trail Edge	LE1 through LE3 SE1 through SE4 (top); SE5 and SE8 (bottom) TE3
A3	SEF	Lead Edge Side Edge Trail Edge	LE 1 through LE3 SE1 through SE4 (top); SE6 and SE7 (bottom) TE4
8.5x11	SEF	Lead Edge Side Edge Trail Edge	LE 1 and LE2 SE1 through SE3 (top); SE9 (bottom) TE5
A4	LSEF	Lead Edge Side Edge Trail Edge	LE 1 and LE2 SE1 through SE3 (top); SE10 (bottom) TE6
8.5x11	LEF	Lead Edge Side Edge Trail Edge	LE1 through SE3 SE1 and 2 (bottom) SE6 and SE7 (top) TE 2
A4	LEF	Lead Edge Side Edge Trail Edge	LE1 through SE3 SE5 (top); SE1 and SE2 (bottom) TE1

1. Set the following Customer Mode Settings to the positions listed:
   - Output Color - Full Color

- Original Type - Photo & Text / Halftone
- Lighter/Darker - Auto Contrast
- Color Saturation - Normal
- Variable Color Balance - Normal
- Sharpness - Normal

2. Place Test Pattern 82E8220 on the platen and 24# Xerox Color Xpressions 11 X 17 (USCO), or 90 GSM Colortech A3 (XL) paper in Tray 1. Make a copy of the test pattern.
3. Follow the directions in Table 3 to determine if the machine registration is within specification.

Table 3 Test Pattern Image Data Locations for Geometric Specifications

GEOMETRIC AREA	CHECK PERFORMED
Magnification	Locate the 300mm line running from near LE1 to the trail edge of the 1.8 lp ladder. Locate the 200mm line running from near LE1 to near LE3. Make a copy. The measurements should be:. • Left to Right.: 300mm ±1.8mm • Front to Rear: 200mm ±1.2mm
Resolution	Observing the targets on the test pattern copy at locations R1 through R8, the line pairs specified below are clearly visible for the magnification value indicated: • 70%: 3.0 lp/mm • 100% through 400%: 4.3 lp/mm
Lead Edge Registration	Measure from the lead edge of the paper to the top of Step 3 on the LE2 Step Scale. The measurement should be: • Trays 1 through 4: 10mm ±1.5mm (±1.9mm for 2nd side of duplex job) • Tray 5: 10mm ±2.2mm
Side Edge Registration	Measure from the side edge of the paper to the top of Step 3 on the SE2 and SE3 Step Scales. The distance should be within the following tolerance: • Trays 1 through 4: 10mm ±2.0mm (±2.4mm for 2nd side of duplex job) • Tray 5: 10mm ±2.4mm
Lead Edge Skew	For skew from front to rear, the distance from the lead edge of the paper to the targets at LE1 and LE3 are measured. The measurements must match each other to within the tolerance below. • Trays 1 through 4: within ±1.5mm (±2.0mm for 2nd side of duplex job) • Tray 5: within ±2.0mm
Side Edge Skew	For skew from left to right, the distance from the side edge of the paper to the targets at SE1 and SE4 are measured. They must match each other to within the tolerance below: • Trays 1 through 4: within ±3.0mm (±4.0mm for 2nd side of duplex job) • Tray 5: within ±4.0mm
Line Density	This parameter is measured on the two 0.7G Text Blocks on the test pattern copy. The machine should reproduce all of the characters shown in the block on the output copy.
Solid Reproduction	This specifies the desired standard for reproduction of solid gray images at 1.0 K. The 1.0 K blocks on the output copy should reproduce with minimal mottle or graininess.

Table 3 Test Pattern Image Data Locations for Geometric Specifications

GEOMETRIC AREA	CHECK PERFORMED
Low Contrast Reproduction	This specifies the desired standard for reproduction of low density images. The machine should reproduce all of the text in the 0.2 G Text Blocks on the output copy.

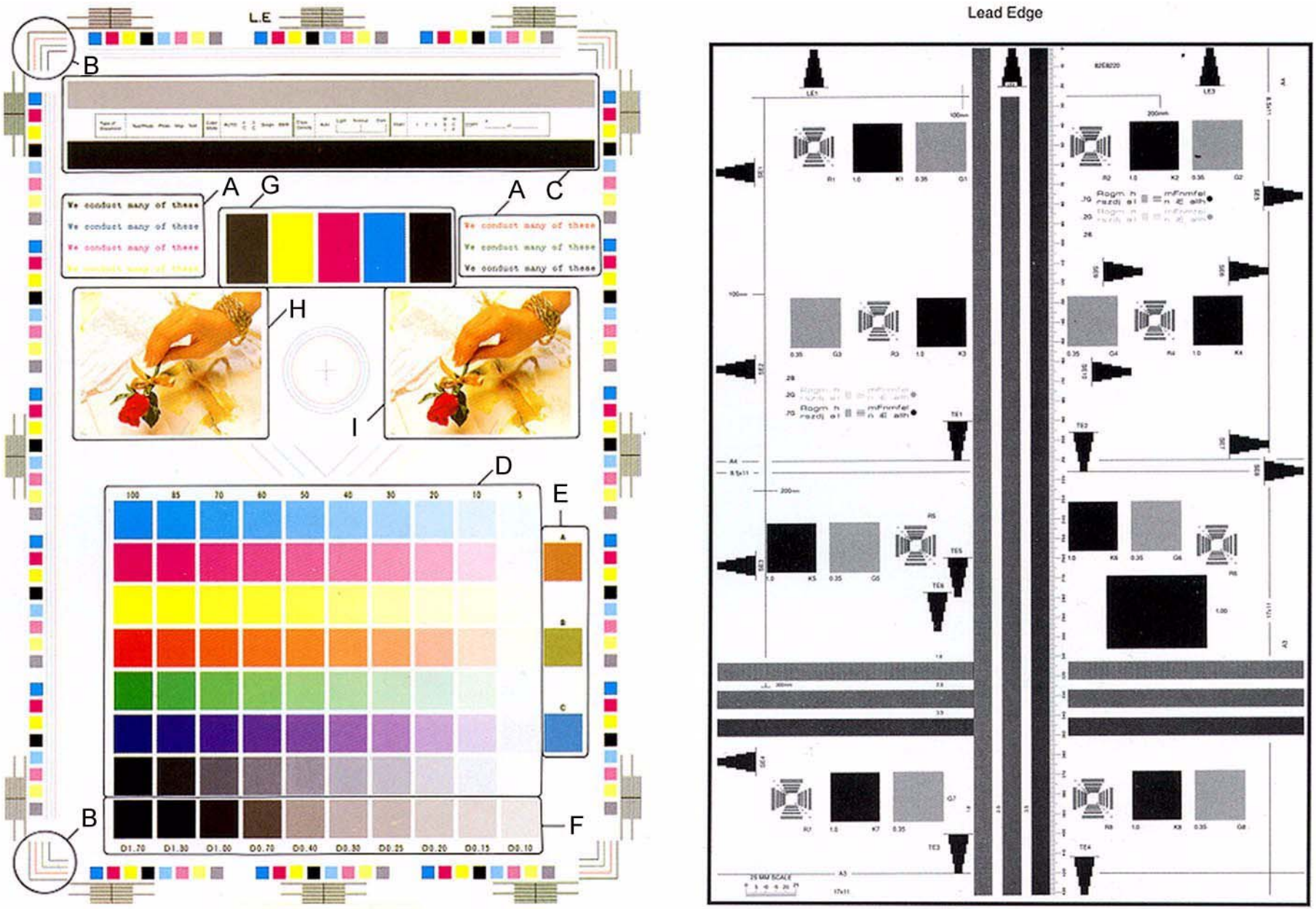

Figure 2 Color and Geometric Test Patterns

Things to Note for Image Quality Restrictions

Table 1 IQ Restrictions

No.	Image Quality Restrictions	Details
1	Roll Marks	Depending on the paper, there may be rubber roll traces or toner wax component stuck in the paper feed direction when performing 2 Sided print or changing the output destination after continuous printing. This is more likely to occur with gloss paper and transparencies.
2	Transparency Blocking	When printing Transparencies continuously and then leaving them on the Exit Tray for a long time, they may adhere to each other and result in uneven gloss or image peel-off. Specifically, it is more likely to occur when printing 20 or more sheets continuously.
3	Condensation Copy	Sometimes patches of water droplets may be found on paper that is printed right after machine start up.
4	Side 2 Blank Areas (caused by water droplets)	These blank areas may appear on Side 2 of A3 paper of 157gsm or more. It is especially visible on gloss paper.
5	Scratched Transparency	When printing on Transparencies, minor scratches may appear in the fast scan direction.
6	Corrugation Lines	Depending on the paper, there may be Pinch Roll traces or minor scratches in the paper feed direction. This is more likely to occur with special paper such as Gloss.
7	Gloss Uneven Side 2	When performing 2 Sided print on Gloss, uneven image may appear on Side 2.
8	Background on Gloss	Background level on Gloss is higher than that on Plain.
9	Smear on Heavyweight	When using Heavyweight, smear may appear at the position 130mm away from the paper lead edge.
10	Rough Black	Depending on the paper type, rough images may occur to some extent.
11	Moist Paper Transfer Failure	This will occur when the paper moisture content increases.
12	Toner Contamination at Lead/ Trail Edge	Slight contamination due to toner has occurred at Lead/Trail Edge.
13	Uneven Streaks in Paper Feed Direction	Uneven streaks may appear in the paper feed direction when performing high volume printing in a low humidity environment.
14	Side 2 Transfer Failure	The hue on Side 2 may become lighter when printing a high density image in a low temperature and low humidity environment.
15	Trail Edge Transfer Failure	Rough image or blank areas may occur for images within 10mm (including margins) from the paper trail edge.
16	MWS (Side2) (Micro White Spots)	Micro white spots may appear on Side 2 in a low humidity environment.
17	Moire	When copying, the Moire may appear due to interference with the halftone document. The appearance of Moire depends on the number of lines and angle of the document, as well as the magnification ratio.

Table 1 IQ Restrictions

No.	Image Quality Restrictions	Details
18	Density Fluctuation Right After Power ON/Change in Environment	In machines set to B/W Priority, the very first color print after power ON may, to some extent, have incorrect color density.
19	Fingerprints	When loading paper, handle it with care and try not to touch the print side. Contamination to the print side will affect the print result. If you wish to obtain the best print results, wear finger cots or gloves so as not to leave any marks on the print side.
20	Color Lines	Color Lines may appear on paper that has lots of paper dust.
21	Vapor	White vapor may leak nearby the top of the LH Cover when printing in a low temperature and low humidity environment using Heavyweight Paper.

4 Repairs & Adjustments

REPAIRS

Chain 1 Electrical Components

REP 1.1 HVPS (1st/2nd/DTC) 4-5
REP 1.2 HVPS (Dev) 7545/7556 4-5
REP 1.3 BP PWB 4-6
REP 1.4 MCU PWB 4-8
REP 1.5 MD PWB 4-10
REP 1.6 IH Driver PWB 4-11
REP 1.7 HVPS (Dev/BCR)7525/30/35 HVPS (BCR)7545/56 4-13
REP 1.9 Control Unit 4-14
REP 1.11 SBC Flash Module/NVM PWB 4-15
REP 1.12 Single Board Controller (SBC) PWB 4-16
REP 1.13 System Disk Drive 4-18

Chain 4 Drive

REP 4.1 Main Drive Assembly (7525/30/35) 4-21
REP 4.2 Main Drive Assembly (7545/56) 4-22
REP 4.3 Drum/Developer Drive Assembly (7525/30/35) 4-24
REP 4.4 Drum/Developer Drive Assembly (7545/56) 4-26

Chain 5 DADF

REP 5.1 DADF 4-29
REP 5.2 DADF Platen Cushion 4-30
REP 5.3 DADF Front Cover 4-31
REP 5.4 DADF Rear Cover 4-31
REP 5.5 DADF Feeder Assembly 4-33
REP 5.6 DADF PWB 4-34
REP 5.7 Left Counter Balance 4-36
REP 5.8 Right Counter Balance 4-37
REP 5.9 DADF Document Tray 4-38
REP 5.10 Top Cover 4-40
REP 5.11 Harness Guide and Wire Harness 4-40
REP 5.12 DADF Registration Motor 4-42
REP 5.13 DADF Feed Motor 4-43
REP 5.14 Reg Chute 4-44
REP 5.15 Retard Chute 4-45
REP 5.16 Takeaway Roll 4-45
REP 5.17 Sensor Bracket 4-48
REP 5.18 Nudger Roll, Feed Roll 4-48
REP 5.19 Retard Roll 4-50

Chain 6 IIT

REP 6.2 Platen Glass 4-51
REP 6.3 Control Panel 4-52
REP 6.4 USB Cable 4-54
REP 6.5 Console Assembly 4-54
REP 6.6 CCD Lens Assembly 4-58
REP 6.7 Front/Rear Carriage Cable 4-60
REP 6.8 Carriage Motor 4-63
REP 6.9 LED Lamp PWB 4-64
REP 6.10 LED Lamp Wire Harness 4-66
REP 6.11 Light Guide 4-68
REP 6.12 IIT PWB 4-69
REP 6.13 USB Connector 4-72

Chain 7 Paper Feed

REP 7.1 Tray 1 Feeder Assembly 4-73
REP 7.2 Tray 1 Feed/Retard/Nudger Roll 4-74
REP 7.3 Tray 2 Feeder Assembly (3TM) 4-74
REP 7.4 Tray 3 Feeder Assembly (3TM) 4-76
REP 7.5Tray 4 Feeder Assembly (3TM) 4-77
REP 7.6 Tray 2 Feed/Retard/Nudger Roll (3TM) 4-78
REP 7.7 Tray 3 Feed/Retard/Nudger Roll (3TM) 4-79
REP 7.8 Tray 4 Feed/Retard/Nudger Roll (3TM) 4-79
REP 7.9 Tray Module PWB (3TM) 4-80
REP 7.10 Tray 3 Assembly (TTM) 4-80
REP 7.11 Tray 4 Assembly (TTM) 4-81
REP 7.12 Tray Cable (TTM) 4-81
REP 7.13 Tray 4 Feeder (TTM) 4-82
REP 7.14 Tray 2 Feeder (TTM) 4-85
REP 7.15 Tray 3 Feeder (TTM) 4-86
REP 7.16 Tray 2 Feed/Retard/Nudger Roll (TTM) 4-88
REP 7.18 Tray 3 Feed/Retard/Nudger Roll (TTM) 4-88
REP 7.19 Tray 4 Feed/Retard/Nudger Roll (TTM) 4-89
REP 7.20 Tray Module PWB (TTM) 4-89
REP 7.21 Tray 5 4-90
REP 7.22 Tray 5 Feed/Retard/Nudger Roll 4-91
REP 7.23 Tray 5 Paper Size Sensor 4-92
REP 7.24 Registration Transport Assembly 4-93

Chain 9 Xerographics

REP 9.1 Transfer Belt Cleaner Assembly 4-95
REP 9.2 IBT Assembly 4-96
REP 9.3 Transfer Belt 4-99
REP 9.4 TR0 Seal 4-101
REP 9.5 Drum 4-102
REP 9.6 Erase Lamp Unit (K) 4-103
REP 9.7 Erase Lamp Unit (Y, M, C) 4-106
REP 9.8 Agitator Motor Assembly 4-110
REP 9.9 2nd BTR Assembly 4-111
REP 9.10 LED Print Head Assembly (Y, M, C, K) 4-112
REP 9.11 LPH Cable Assembly (7525/30/35) 4-112
REP 9.12 LPH Cable Assembly (7545/7556) 4-115
REP 9.13 Toner Dispense Motor Assembly 4-118
REP 9.14 Developer Housing Assembly (Y, M, C, K) 4-120

REP 9.15 Developer 4-125
REP 9.16 MOB ADC Assembly 4-128

Chain 10 Fuser/Post-Fuser Transport

REP 10.1 Fuser 4-131
REP 10.2 Duplex Assembly 4-132

Chain 11 Exit/OCT

REP 11.1 Exit/OCT 1 Assembly 4-135
REP 11.2 Exit 2 Assembly 4-136

Chain 14 Covers

REP 14.1 L/H Cover Unit 4-137
REP 14.2 Top Cover 4-138
REP 14.3 Rear Lower Cover 4-140
REP 14.4 Opening/Closing the PWB Chassis Unit 4-141

Chain 19 High Capacity Feeder

REP 19.1 HCF Tray 6 4-143
REP 19.2 HCF Feeder 4-143
REP 19.3 HCF Un-docking 4-144
REP 19.4 HCF Tray Cables 4-145
REP 19.5 HCF Feed, Nudger, Retard Rolls 4-151
REP 19.6 HCF Feed Shaft 4-152
REP 19.7 HCF Retard Lever Spring 4-153
REP 19.8 HCF Nudger Bracket/Nudger Lever/Torsion Spring 4-154
REP 19.9 HCF Casters 4-154
REP 19.10 HCF Takeaway Roll 4-155
REP 19.11 HCF PWB 4-155
REP 19.12 HCF Feed Motor 4-156

Chain 21 Professional Finisher

REP 21.1 (Pro) Finisher Front Door 4-157
REP 21.2 (Pro) Finisher Rear Upper Cover 4-157
REP 21.3 (Pro) Finisher Rear Lower Cover 4-158
REP 21.4 (Pro) Finisher Top Cover 4-158
REP 21.5 (Pro) Finisher Front Top Cover 4-159
REP 21.6 (Pro) Finisher Top Tray 4-160
REP 21.7 (Pro) Finisher Eject Cover 4-160
REP 21.8 (Pro) Finisher Tray Spring Guide 4-161
REP 21.9 (Pro) Finisher Inner Cover 4-162
REP 21.10 (Pro) Finisher Left Top Cover 4-163
REP 21.11 (Pro) Finisher 4-163
REP 21.12 (Pro) Finisher H-Transport Assembly 4-165
REP 21.13 (Pro) Finisher Punch Frame Assembly 4-166
REP 21.14 (Pro) Finisher Stapler Assembly 4-169
REP 21.15 (Pro) Finisher Stapler Rail 4-170
REP 21.16 (Pro) Finisher Booklet Maker 4-170
REP 21.17 (Pro) Finisher Booklet Stapler 4-171
REP 21.18 (Pro) Finisher Compiler Tray 4-171
REP 21.19 (Pro) Finisher Stacker Tray Position 4-173
REP 21.20 (Pro) Finisher Paddle Shaft 4-173
REP 21.21 (Pro) Finisher Stacker Drive Belt 4-174
REP 21.22 (Pro) Finisher Buffer Path Sensor 4-175
REP 21.23 (Pro) Finisher Gate Sensor 4-175
REP 21.24 (Pro) Finisher Top Tray Full Sensor 4-176
REP 21.25 (Pro) Finisher Buffer Roll 4-176
REP 21.26 (Pro) Finisher Bottom Buffer Chute Assembly 4-178
REP 21.27 (Pro) Finisher H-Transport Drive Belt 4-179
REP 21.28 (Pro) Finisher Eject Chute Assembly 4-180
REP 21.29 (Pro) Finisher PWB 4-181

Chain 22 Integrated Finisher

REP 22.1 Integrated Office Finisher 4-183
REP 22.2 (Int) Paddle Belt 4-184
REP 22.3 (Int) Sub Paddle Solenoid 4-186
REP 22.5 (Int) Staple Assembly 4-188
REP 22.6 (Int) Set Clamp Home Sensor 4-189
REP 22.7 (Int) Exit Roll Assembly 4-190
REP 22.8 (Int) Pinch Roll 4-192
REP 22.9 (Int) Finisher Entrance Sensor 4-192
REP 22.10 (Int) Compiler Exit Sensor 4-194
REP 22.11 (Int) Main Paddle Shaft Assembly 4-195
REP 22.12 (Int) Lower Chute Assembly 4-197
REP 22.13 (Int) Entrance Roll Assembly 4-199
REP 22.14 (Int) Upper Chute Assembly 4-201
REP 22.15 (Int) Finisher PWB 4-203
REP 22.16 (Int) Stacker Tray Assembly 4-203
REP 22.17 (Int) Stacker Shaft Assembly 4-205
REP 22.18 (Int) Stacker Motor 4-207
REP 22.19 (Int) Stacker Sensor 4-209
REP 22.20 (Int) Compiler Assembly 4-209
REP 22.21 (Int) Set Clamp Shaft 4-211
REP 22.22 (Int) Eject Belt 4-213
REP 22.23 (Int) Eject/Set Clamp Motor Assembly 4-214
REP 22.24 (Int) Rear Tamper Home Sensor 4-216
REP 22.25 (Int) Eject Shaft Assembly 4-217
REP 22.26 (Int) Front /Rear Tamper Motor Assembly 4-219
REP 22.27 (Int) Front Tamper Home Sensor 4-220
REP 22.28 (Int) Eject Clamp Home Sensor 4-222
REP 22.29 (Int) Stack Height Sensor 4-223

Chain 23 Office Finisher LX

REP 23.1 (LX) H-Transport Assembly 4-225
REP 23.2 (LX) Hole Punch Assembly 4-225
REP 23.3 (LX) H-Transport Belt 4-226
REP 23.4 (LX) H-Transport Motor 4-226
REP 23.5 (LX) Finisher Undocking 4-227
REP 23.6 (LX) Front Cover Assembly 4-228
REP 23.7 (LX) Rear Upper Cover 4-228
REP 23.8 (LX) Rear Lower Cover 4-229
REP 23.9 (LX) Eject Cover 4-229
REP 23.10 (LX) Foot Cover 4-231
REP 23.11 (LX) Stacker Lower Cover 4-232
REP 23.12 (LX) Stacker Upper Cover 4-232

REP 23.13 (LX) Stack Height Sensors 1 and 2 4-233
REP 23.14 (LX) Sub Paddle Solenoid Assembly 4-233
REP 23.15 (LX) Stapler Motor 4-234
REP 23.16 (LX) Finisher Stapler Assembly 4-235
REP 23.17 (LX) Compiler Tray Assembly 4-236
REP 23.18 (LX) Crease Assembly 4-246
REP 23.19 (LX) Stacker Elevator Motor 4-247
REP 23.20 (LX) Stacker Tray 4-251
REP 23.21 (LX) Eject Belt 4-251
REP 23.22 (LX) Eject Motor Assembly 4-252
REP 23.23 (LX) Finisher PWB 4-252
REP 23.24 (LX) Finisher LVPS 4-253
REP 23.25 (LX) Eject Motor 4-254
REP 23.26 (LX) Front/Rear Tamper Motor 4-254
REP 23.27 (LX) Front/Rear Tamper Home Sensors 4-255
REP 23.28 (LX) Compiler No Paper Sensor 4-255
REP 23.29 (LX) Front/Rear Carriage Assembly 4-256
REP 23.30 (LX) Booklet PWB 4-257
REP 23.31 (LX) Booklet Maker Assembly 4-258
REP 23.32 (LX) Booklet Front Cover 4-260
REP 23.33 (LX) Booklet Rear Cover 4-261
REP 23.34 (LX) Booklet Top Cover 4-262
REP 23.35 (LX) Booklet PWB Cover 4-263
REP 23.36 (LX) Booklet Left Cover 4-263
REP 23.37 (LX) Booklet Front/Rear Stapler 4-264
REP 23.38 (LX) Booklet Stapler Move Motor 4-266

ADJUSTMENTS

Chain 4

ADJ 4.1 UI Diagnostic Tests 4-267

Chain 5 DADF

ADJ 5.1 DADF Lead-Skew Adjustment 4-269
ADJ 5.2 DADF Side Registration 4-271
ADJ 5.4 DADF Lead Edge Registration 4-272

Chain 6 IIT

ADJ 6.1 Full/Half Rate Carriage Position Adjustment 4-275
ADJ 6.2 IIT Lead Edge Registration 4-277
ADJ 6.3 IIT Side Registration 4-278
ADJ 6.5 IIT Calibration 4-279
ADJ 6.6 Optical Axis Correction 4-280

Chain 7 Paper Feed

ADJ 7.1 Tray 5 (MSI) Guide Adjustment 4-281

Chain 9 Electrical/Xerographic

ADJ 9.1 Lead Edge/Side Edge Registration 4-283
ADJ 9.2 Edge Erase Value Adjustment 4-285
ADJ 9.3 ProCon On/Off Print Check 4-285
ADJ 9.5 Thin Line Correction Mode Adjustment 4-287
ADJ 9.6 LPH Exposure Amount Fine Adjustment 4-287
ADJ 9.7 ATC Sensor Setup 4-290
ADJ 9.8 Default Developer ATC Setup 4-291
ADJ 9.9 Registration Measurement Cycle 4-292
ADJ 9.10 Registration Control Setup Cycle 4-292
ADJ 9.11 Registration Control Sensor Check Cycle 4-293
ADJ 9.13 TRC Manual Adjustment 4-293
ADJ 9.14 Toner Density Setup (Tone Up/Down) 4-294
ADJ 9.15 UI Touch Panel Origin Point Correction 4-294
ADJ 9.16 MAX Setup 4-295

Chain 12 Finishers

ADJ 12.1 Professional Finisher Leveling 4-297
ADJ 12.2 Professional Finisher Booklet Fold Skew 4-298
ADJ 12.3 Professional Finisher Booklet Fold Position 4-299
ADJ 12.4 Professional Finisher Booklet Staple Position (Staple on Fold) 4-300
ADJ 12.5 Professional Finisher Booklet Staple Alignment 4-301
ADJ 12.6 Professional Finisher Booklet Wrinkle 4-302
ADJ 12.7 Professional Finisher Booklet Fold Position (Fine Adjustment) 4-305
ADJ 12.8 Professional Finisher Booklet Staple Position (Staple on Fold Fine Adjustment) 4-306
ADJ 12.9 Finisher LX Hole Punch Position 4-307
ADJ 12.10 Finisher LX Booklet Crease/Staple Position 4-308

REP 1.1 HVPS (1st/2nd/DTC)

Parts List on PL 6.2

Removal

NOTE: *When turning the power OFF, turn OFF the Power Switch first and then the Main Power Switch.*

CAUTION

Static electricity may damage electrical parts. Always wear a wrist band during servicing. If a wrist band is not available, touch some metallic parts before servicing to discharge the static electricity.

1. Press the **Job Status** button to check that there are no jobs in progress.
2. Switch off the power and disconnect the power cord.
3. Open the PWB Chassis Unit. (REP 14.4)
4. Remove the HVPS (1st/2nd/DTC). (Figure 1)
   a. Disconnect the connector.
   b. Remove the screws (M3x8: x3).
   c. Remove the screws (M3x6: x2).
   d. Remove the HVPS (1st/2nd/DTC).

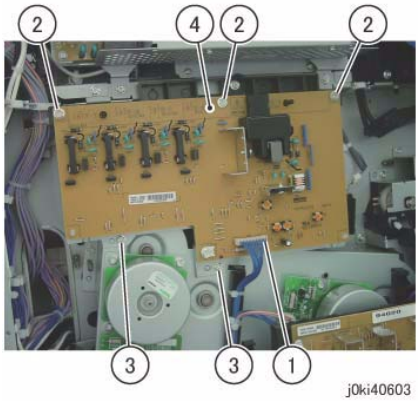

Figure 1 Remove the HVPS

Replacement

1. To install, carry out the removal steps in reverse order.

REP 1.2 HVPS (Dev) 7545/7556

Parts List on PL 5.3

Removal

NOTE: *When turning the power OFF, turn OFF the Power Switch first and then the Main Power Switch.*

1. Press the **Job Status** button to check that there are no jobs in progress.
2. Switch off the power and disconnect the power cord.
3. Open the PWB Chassis Unit. (REP 14.4)
4. Disconnect the connector of the HVPS (Dev). (Figure 1)
   a. Release the wire harness from the Harness Guide.
   b. Disconnect the connector.
   c. Remove the Tapping Screw.

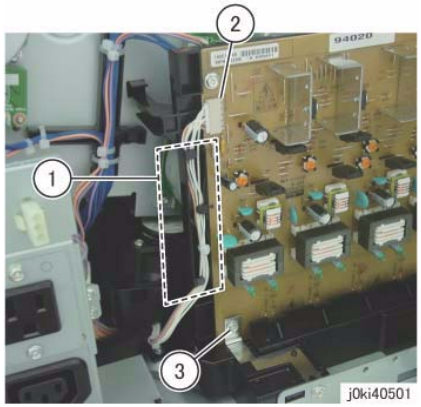

Figure 1 Disconnect the connector

5. Remove the HVPS (Dev). (Figure 2)
   a. Release the hooks (x2).
   b. Remove the HVPS (Dev) in the direction of the arrow.

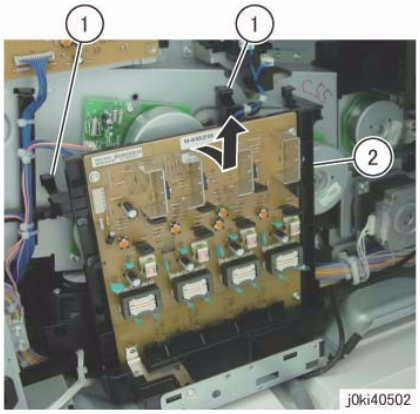

Figure 2 Remove the LVPS

Replacement

1. To install, carry out the removal steps in reverse order.

REP 1.3 BP PWB

Parts List on PL 18.2A/PL 18.2B

Removal

CAUTION

Static electricity may damage electrical parts. Always wear a wrist band during servicing. If a wrist band is not available, touch some metallic parts before servicing to discharge the static electricity.

NOTE: *When turning the power OFF, turn OFF the Power Switch first and then the Main Power Switch.*

NOTE: *Do not replace the BP PWB, MCU PWB and NVM PWB at the same time because they contain information such as Billing.*

1. Press the **Job Status** button to check that there are no jobs in progress.
2. Switch off the power and disconnect the power cord.
3. Remove the Control Unit. (REP 1.9)
4. Remove the MD PWB. (REP 1.5)
5. Remove the MCU PWB. (REP 1.4)
6. Remove the SBC Cover. (PL 18.3)
7. Open the PWB Chassis Unit. (REP 14.4)
8. Disconnect the connector of the BP PWB. (Figure 1)
   a. Disconnect the connectors (x2).

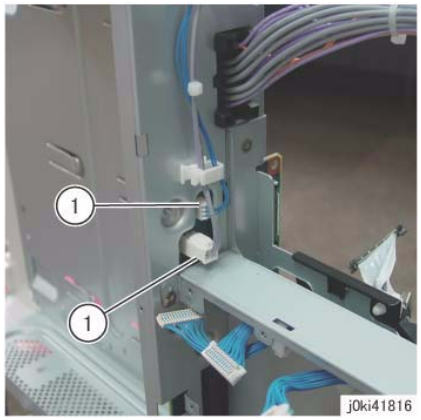

Figure 1 Disconnect the connectors

9. Disconnect the connector of the BP PWB. (Figure 2)
   a. Disconnect the connectors (x2).
   b. Release the hook and disconnect the connectors (x2).
   c. Release the hook and disconnect the connector.

   NOTE: *Take care to not pull too forcefully as it may damage the hook.*

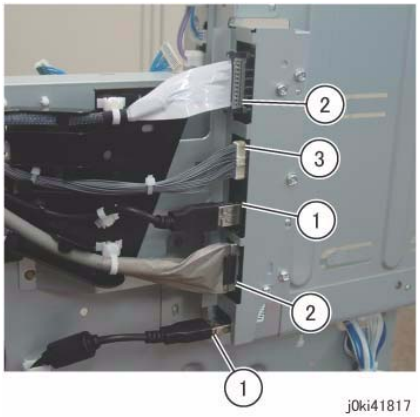

Figure 2 Disconnect the BP PWB connectors

10. Remove the Shield. (Figure 3)
    a. Remove the screws (x2).
    b. Remove the Shield in the direction of the arrow.

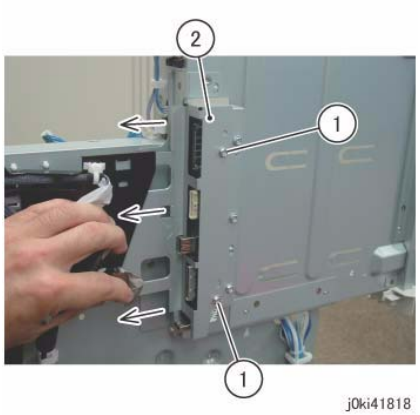

Figure 3 Remove the Shield

11. Remove the Bracket. (Figure 4)
    a. Remove the screws (x6).
    b. Remove the Bracket.

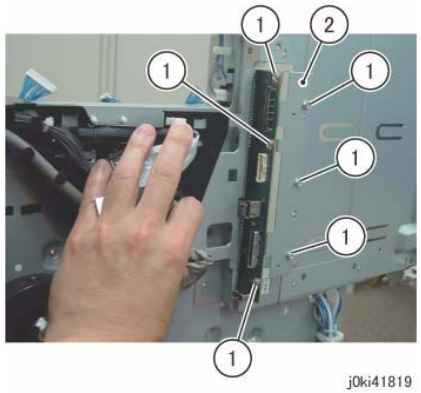

Figure 4 Remove the Bracket

12. Remove the BP PWB. (Figure 5)
    a. Remove the screws (x3).
    b. Remove the BP PWB.

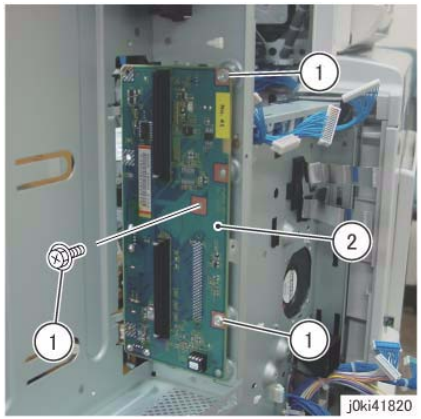

Figure 5 Remove the BP PWB

Replacement

1. When replacing the BP PWB, remove the EEP ROM from the old BP PWB and install it onto the new one. (Figure 6)

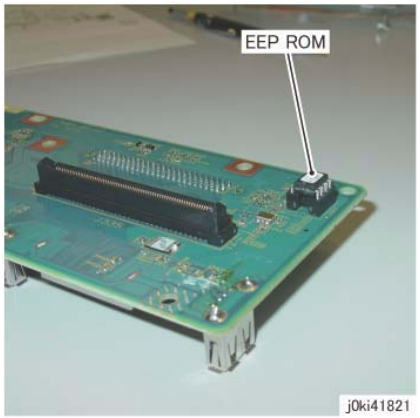

Figure 6 Remove the EEP ROM

2. To install, carry out the removal steps in reverse order.

REP 1.4 MCU PWB

Parts List on PL 18.2A/PL 18.2B

Removal

CAUTION

Serial number data is stored at three locations:

- *MCU NVM PWB*
- *SBC NVM PWB*
- *IIT/IPS PWB.*

If these boards are replaced one-at-a-time, the machine will automatically synchronize the data on the new PWB to match the other two. You must install the new PWB, switch on the power, wait for the numbers to synchronize, then switch off the power before replacing any other PWB.:

If the removal/replacement procedure is not followed correctly, or if data corruption causes one of the following faults:

- *16-801.19*
- *22-352*

then you must perform dC132 to restore serial numbers/billing data.

CAUTION

Static electricity may damage electrical parts. Always wear a wrist band during servicing. If a wrist band is not available, touch some metallic parts before servicing to discharge the static electricity.

NOTE: *When turning the power OFF, turn OFF the Power Switch first and then the Main Power Switch.*

1. Press the **Job Status** button to check that there are no jobs in progress.
2. Switch off the power and disconnect the power cord.
3. Remove the Control Unit Connector Cover. (PL 19.3)
4. Remove the Filter Cover and Rear Upper Cover. (PL 19.3)
5. Remove the Rear Lower Cover. (REP 14.3)
6. Remove the MD PWB. (REP 1.5)
7. Disconnect the Flexible Print Cables. (Figure 1)
   a. Disconnect the Flexible Print Cables (x2).
   b. Disconnect the Flexible Print Cables (x2).

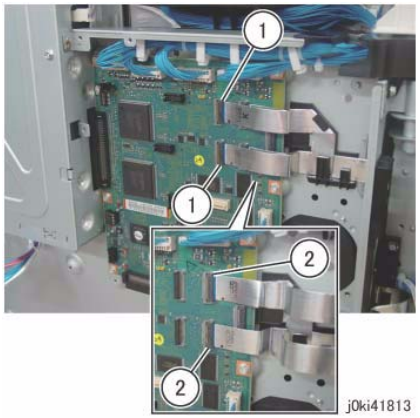

Figure 1 Disconnect the Flexible Print Cables

8. Disconnect the connectors (x8). (Figure 2)

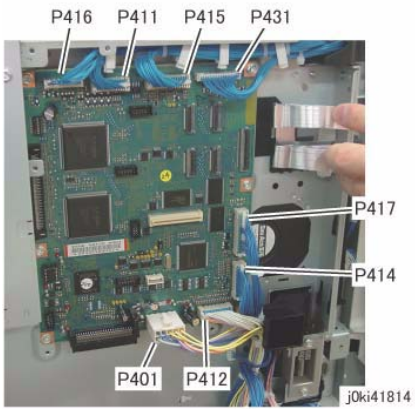

Figure 2 Disconnect the connectors

9. Remove the MCU PWB. (Figure 3)
   a. Remove the screws (x6).
   b. Disconnect the connector and remove the MCU PWB.

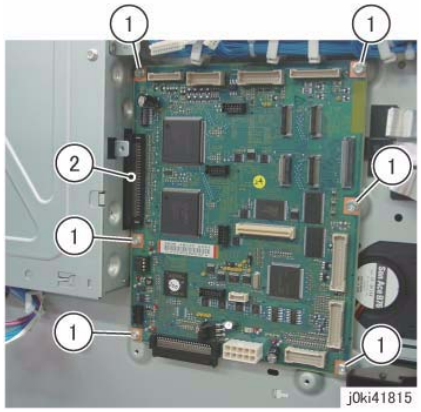

Figure 3 Remove the MCU PWB

Replacement

1. When replacing the MCU PWB, remove the EEP ROM from the old MCU PWB and install it onto the new one. (Figure 4)

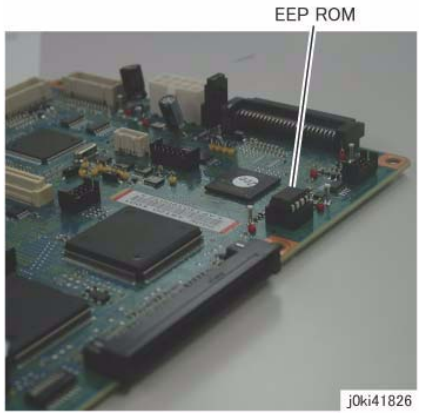

Figure 4 Remove the EEP ROM

2. To install, carry out the removal steps in reverse order.
3. "041-340 (MCU NVM <EEPROM> Data Fail)" is displayed and the IOT initialization will be performed.

REP 1.5 MD PWB

Parts List on PL 18.2A/PL 18.2B

Removal

CAUTION

Static electricity may damage electrical parts. Always wear a wrist band during servicing. If a wrist band is not available, touch some metallic parts before servicing to discharge the static electricity.

NOTE: *When turning the power OFF, turn OFF the Power Switch first and then the Main Power Switch.*

1. Press the **Job Status** button to check that there are no jobs in progress.
2. Switch off the power and disconnect the power cord.
3. Remove the Control Unit Connector Cover. (PL 19.3)
4. Remove the Filter Cover and Rear Upper Cover. (PL 19.3)
5. Remove the Rear Lower Cover. (REP 14.3)
6. Disconnect the connectors (x17). (Figure 1)

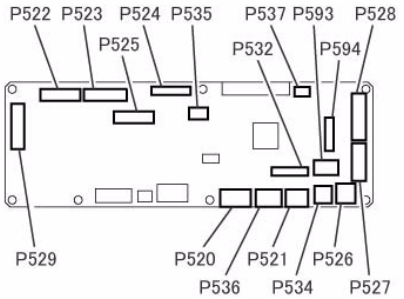

Figure 1 Disconnect the connectors

7. Remove the MD PWB. (Figure 2)
   a. Remove the screws (x8).
   b. Disconnect the connector and remove the MD PWB.

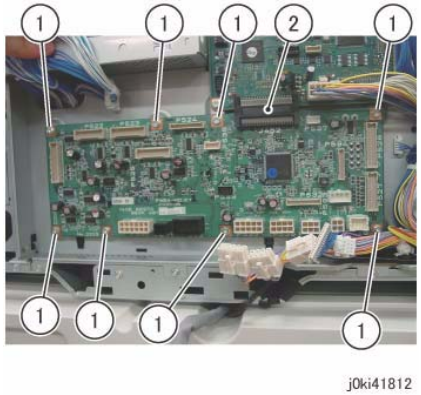

Figure 2 Remove the MD PWB

Replacement

1. To install, carry out the removal steps in reverse order.

REP 1.6 IH Driver PWB

Parts List on PL 18.3

Removal

NOTE: *When turning the power OFF, turn OFF the Power Switch first and then the Main Power Switch.*

1. Press the **Job Status** button to check that there are no jobs in progress.
2. Switch off the power and disconnect the power cord.
3. Open the PWB Chassis Unit. (REP 14.4)
4. Remove the IIT Rear Cover. (Figure 1)
   a. Loosen the screws (x2) and disconnect the connector.
   b. Remove the screws (x2).
   c. Remove the IIT Rear Cover.

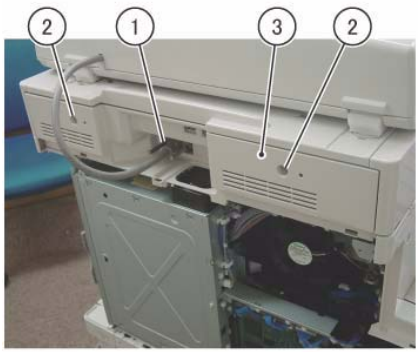

j0ki40139

Figure 1 Remove the IIT Rear Cover

5. [7545/56]:
   Disconnect the connector of the Sub LVPS. (Figure 2)
   a. Disconnect the connector.

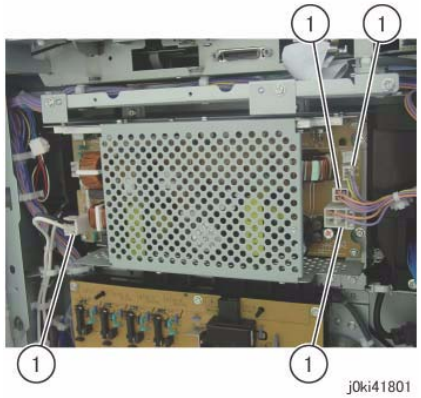

j0ki41801

Figure 2 Disconnect the connectors

6. [7545/56]:
   Remove the Sub LVPS. (Figure 3)
   a. Remove the screws (x4).
   b. Remove Sub LVPS.

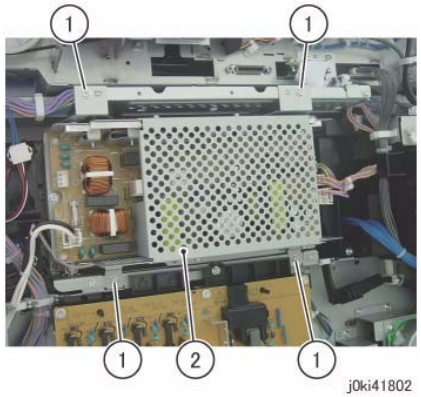

j0ki41802

Figure 3 Remove the Sub LVPS

7. Disconnect the connector of the IH Driver PWB. (Figure 4)
   a. Remove the cable band.
   b. Disconnect the connectors (x2).

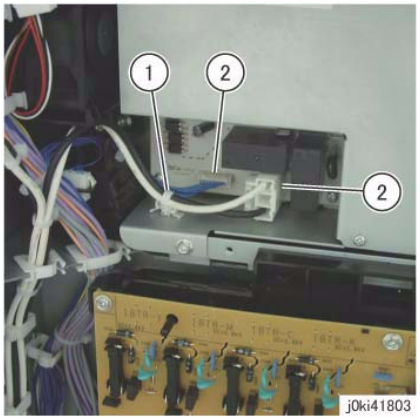

Figure 4 Disconnect the IH Driver PWB connectors

8. Disconnect the connector of the Fuser Drawer Harness. (Figure 5)
   a. Release the wire harness from the clamp.

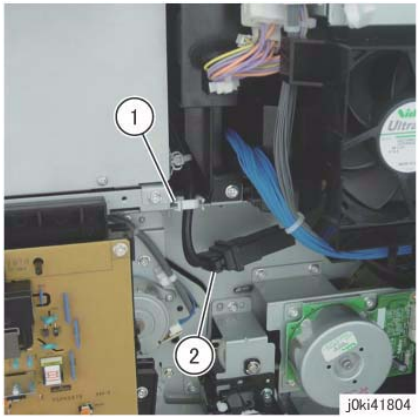

Figure 5 Disconnect the Fuser Drawer Harness connectors

9. Remove the IH Driver PWB. (Figure 6)
   a. Remove the screws (x4).
   b. Remove the IH Driver PWB.

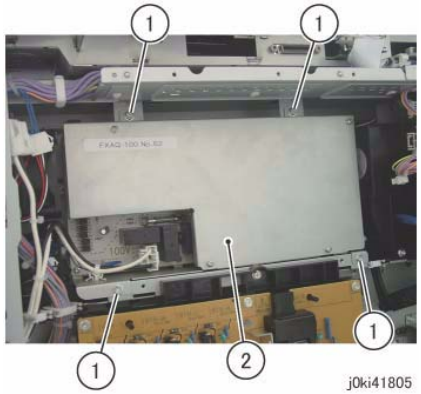

Figure 6 Remove the IH Driver PWB

Replacement

1. To install, carry out the removal steps in reverse order.

REP 1.7 HVPS (Dev/BCR)7525/30/35 HVPS (BCR)7545/56

Parts List on PL 18.6A (7525/7530/7535)

Parts List on PL 18.6B (7545/7556)

Removal

NOTE: *7545/7556 HVPS (Dev) (REP 1.2)*

NOTE: *When turning the power OFF, turn OFF the Power Switch first and then the Main Power Switch.*

1. Press the **Job Status** button to check that there are no jobs in progress.
2. Switch off the power and disconnect the power cord.
3. Remove the following parts:
   - Waste Toner Container (PL 8.2)
   - Right Cover (PL 19.3)
4. Remove the Tie Bar. (Figure 1)
   a. Remove the screws (x4).
   b. Remove the Tie Bar.

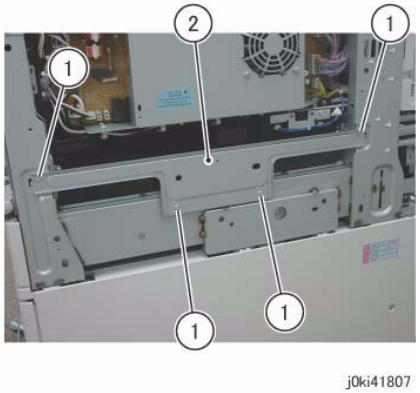

Figure 1 Remove the Tie Bar

5. Disconnect the connectors (x2). (Figure 2)
   a. Remove the cable band.
   b. Disconnect the connectors (x2).

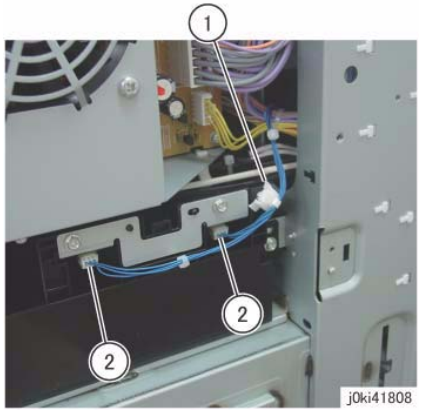

Figure 2 Disconnect the connectors

6. Remove the Bottle Guide Assembly. (Figure 3)
   a. Remove the screws (x4).
   b. Remove the Bottle Guide Assembly.

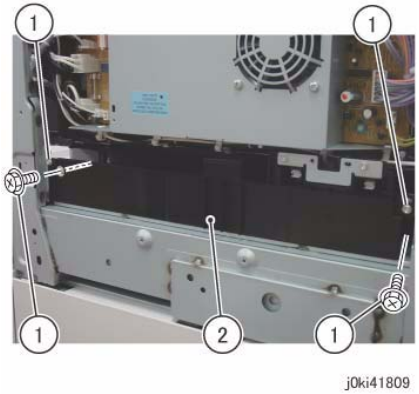

Figure 3 Removing the Bottle Guide Assembly

7. [7525/30/35]:
   Remove the HVPS (Dev/BCR). (Figure 4)
   a. Disconnect the connector.
   b. Remove the screws (x2).
   c. Hold onto the tabs (x2) of the Bracket and pull out the HVPS (Dev/BCR) in the direction of the arrow.

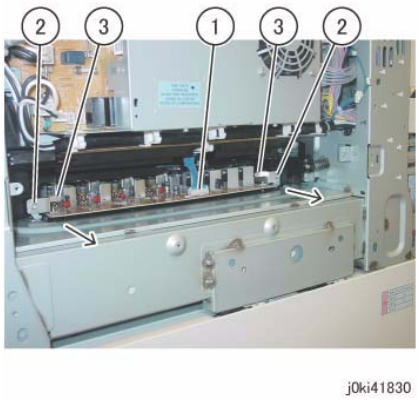

Figure 4 Remove the HVPS (Dev/BCR)

8. [7545/56]:
   Remove the HVPS (BCR). (Figure 5)
   a. Disconnect the connector.
   b. Remove the screws (x2).
   c. Pull out and remove the HVPS (BCR).

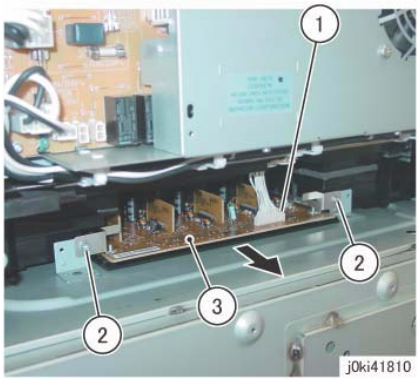

Figure 5 Remove the HVPS (BCR)

Replacement

1. To install, carry out the removal steps in reverse order.

REP 1.9 Control Unit

Parts List on PL 35.1

Removal

NOTE: *When turning the power OFF, turn OFF the Power Switch first and then the Main Power Switch.*

1. Press the **Job Status** button to check that there are no jobs in progress.
2. Switch off the power and disconnect the power cord.
3. Remove the Control Unit Connector Cover. (PL 19.3)
4. Disconnect all cables connected to the Control Unit.
5. Pull out the Control Unit. (Figure 1)
   a. Loosen the Thumbscrews (x2).
   b. Loosen the handle Thumbscrew.
   c. Open the handle and pull out the Control Unit.

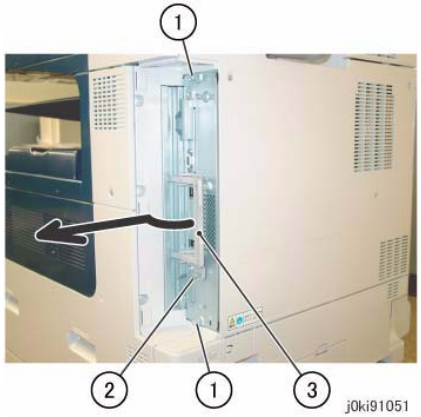

Figure 1 Pull out the Control unit

REP 1.11 SBC Flash Module/NVM PWB

Parts List on PL 35.2

Preparation

1. If possible, go to dC361 and save NVM.
2. If possible, go to GP 13 and Clone Network Configurations.
3. If possible, print a configuration page.
4. If possible, record the Billing Meter contents. Replacing the SBC NVM PWB will clear the Billing meters. You will need to report this (GP 20).

Removal

CAUTION

Serial number data is stored at three locations:

- *MCU NVM PWB*
- *SBC NVM PWB*
- *IIT/IPS PWB.*

If these boards are replaced one-at-a-time, the machine will automatically synchronize the data on the new PWB to match the other two. You must install the new PWB, switch on the power, wait for the numbers to synchronize, then switch off the power before replacing any other PWB.:

If the removal/replacement procedure is not followed correctly, or if data corruption causes one of the following faults:

- *16-801.19*
- *22-352*

then you must perform dC132 to restore serial numbers/billing data.

NOTE: *When turning the power OFF, turn OFF the Power Switch first and then the Main Power Switch.*

1. Press the **Job Status** button to check that there are no jobs in progress.
2. Switch off the power and disconnect the power cord.
3. Remove the Control Unit. (REP 1.9)
4. Remove the SBC NVM PWB (Figure 1).

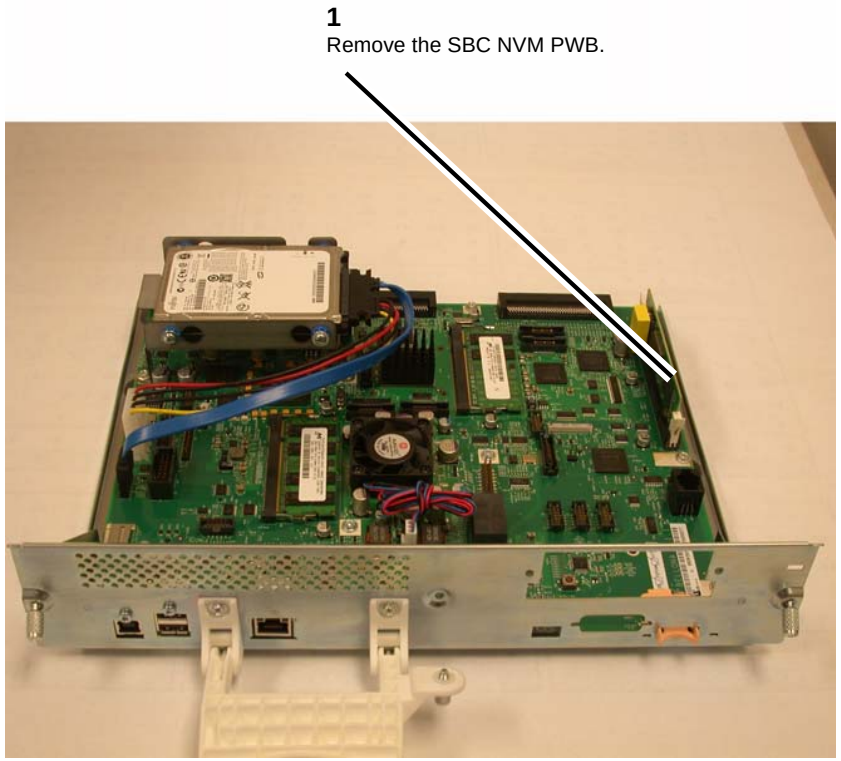

Figure 1 Removing the SBC Flash Module/NVM PWB

Replacement

NOTE: *When replacing the Flash Module/NVM PWB the Machine will boot up in manufacturing mode. To change to a different mode please see below.*

1. *Install the Flash Memory module onto the NVM PWB (Figure 1).*
2. *After reassembling the machine, turn on and run the install Wizard.*
   a. *Change NVM Read/Write (dC131) location 616-014 to a value of 2 and reboot machine.*
   b. *To bypass the Install wizard and go to install complete mode set NVM Read/Write (dC131) location 616-014 to a value of 4 and reboot machine.*
3. *Perform GP 9*
4. *Restore machine settings (dC361).*
5. *Report BIlling Meter resets (GP 20).*

NOTE: *Enablement of optional features may be lost when the SBC NVM PWB is replaced. Go to GP 13 and restore Cloned Network Configurations .*

REP 1.12 Single Board Controller (SBC) PWB

Parts List on PL 35.2

Preparation

CAUTION

The AltBoot procedure (GP 9) that is required when replacing this component will delete all stored data on the System Disk Drive, including E-mail addresses, Xerox Standard Accounting data, and network configuration information. ***ALWAYS*** *clone the machine (GP 13), if possible, before performing AltBoot. If the machine failure is such that cloning is not possible, ensure that the customer is aware of the data loss.*

1. If possible, go to dC361 and save NVM.
2. If possible, print a configuration page

Removal

NOTE: *When turning the power OFF, turn OFF the Power Switch first and then the Main Power Switch.*

1. Press the **Job Status** button to check that there are no jobs in progress.
2. Switch off the power and disconnect the power cord.
3. Remove the Control Unit. (REP 1.9)
4. Remove the FAX PWB if present.
5. Remove the System HDD. (REP 1.13)
6. Remove the Disk Drive chassis (Figure 1).

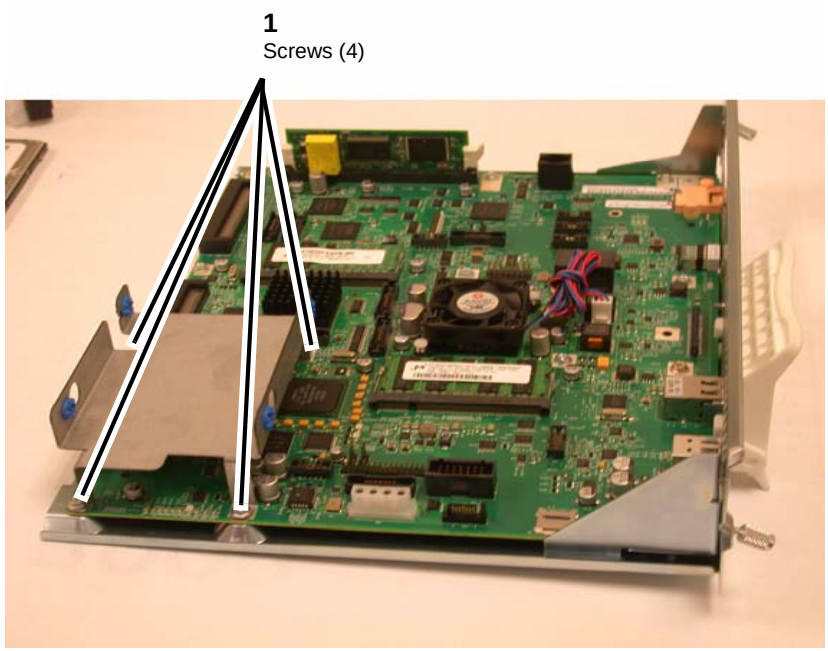

Figure 1 Removing the Disk Drive chassis

7. Unscrew the edge connectors (Figure 2).

   NOTE: *Take note of which mounting screws come from which edge connectors; they are different.*

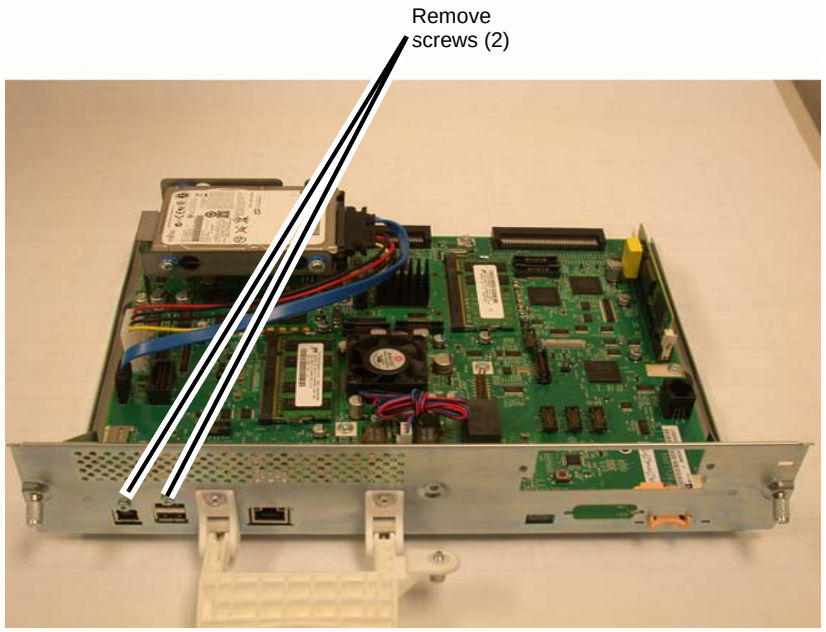

Figure 2 Removing the edge connectors

NOTE: *RAM modules are not interchangeable; take note of the correct location for each.*

8. Remove the System Memory, EPC Memory, Flash ROM and NVM PWBA from the SBC PWB (Figure 3).

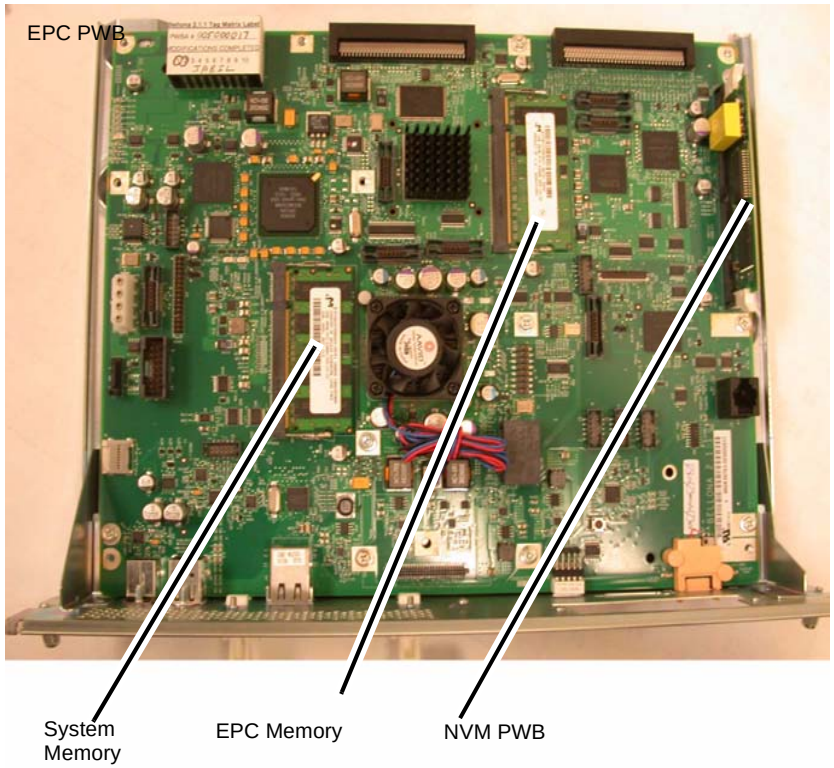

Figure 3 Removing the memory PWBs

9. Remove the SBC PWB (Figure 4).

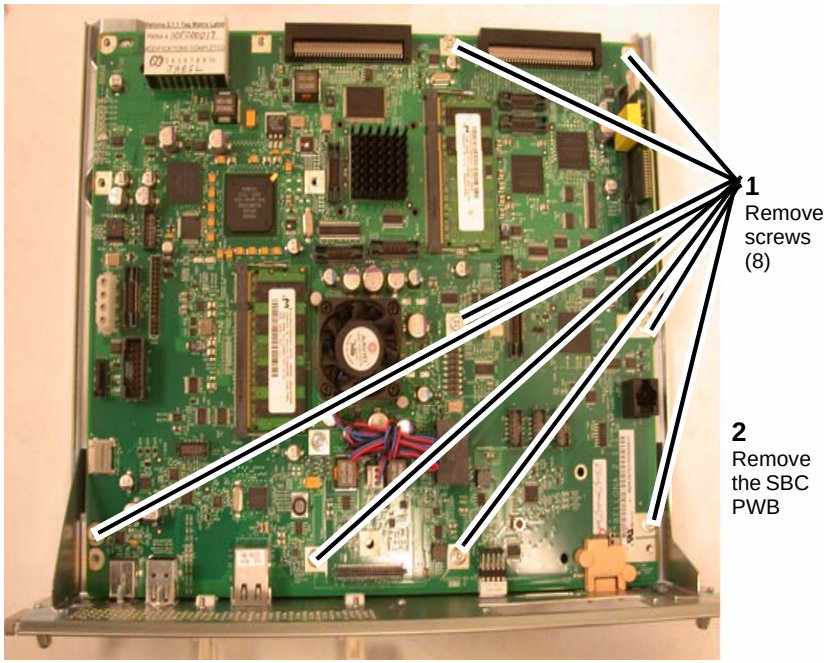

Figure 4 Removing the SBC PWB

Replacement

1. Install the System Memory, EPC Memory, Flash ROM and NVM PWB onto the new SBC PWB (Figure 3).
2. Install the SBC in the SBC Chassis (Figure 4).
3. After reassembling the machine, perform **Regular AltBoot** (GP 9).
4. Print a configuration page. Verify that all options are enabled.
5. Reload saved clone (GP 13).

REP 1.13 System Disk Drive

Parts List on PL 35.2

Removal

NOTE: *When turning the power OFF, turn OFF the Power Switch first and then the Main Power Switch.*

CAUTION

The AltBoot procedure (GP 9) that is required when replacing this component will delete all stored data on the System Disk Drive, including E-mail addresses, Xerox Standard Accounting data, and network configuration information. ***ALWAYS*** *clone the machine (GP 13), if possible, before performing AltBoot. If the machine failure is such that cloning is not possible, ensure that the customer is aware of the data loss.*

1. Press the **Job Status** button to check that there are no jobs in progress.
2. Switch off the power and disconnect the power cord.
3. Remove the Control Unit. (REP 1.9)
4. Disconnect the connector (1) (Figure 1)

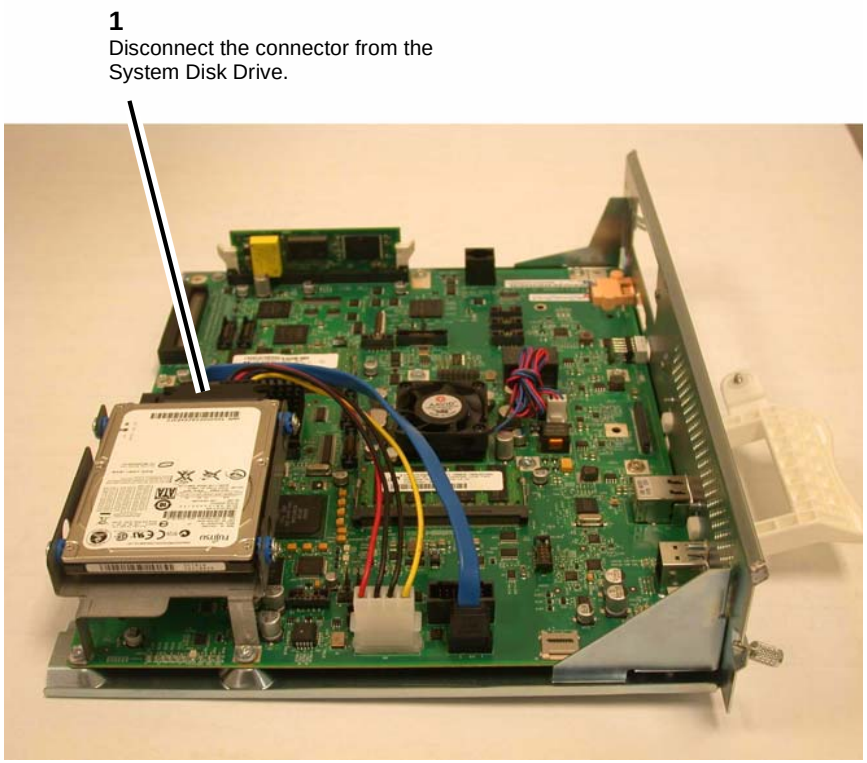

Figure 1 Disconnecting the Disk Drive Connector

5. Remove the screws (4). (Figure 2)

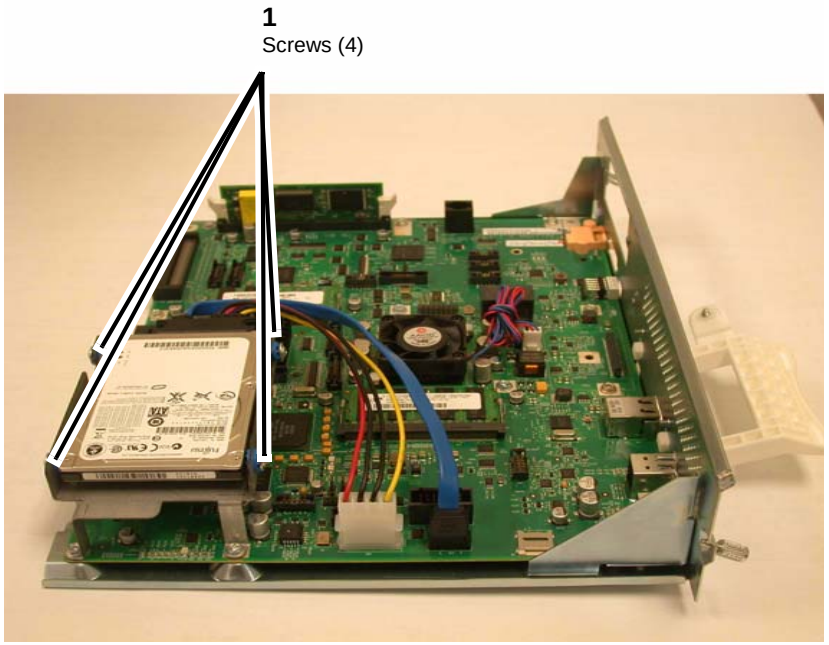

Figure 2 Removing Replacing the Disk Drive

Replacement

1. After positioning the Disk Drive inside the HDD chassis, install the 4 screws (Figure 3).

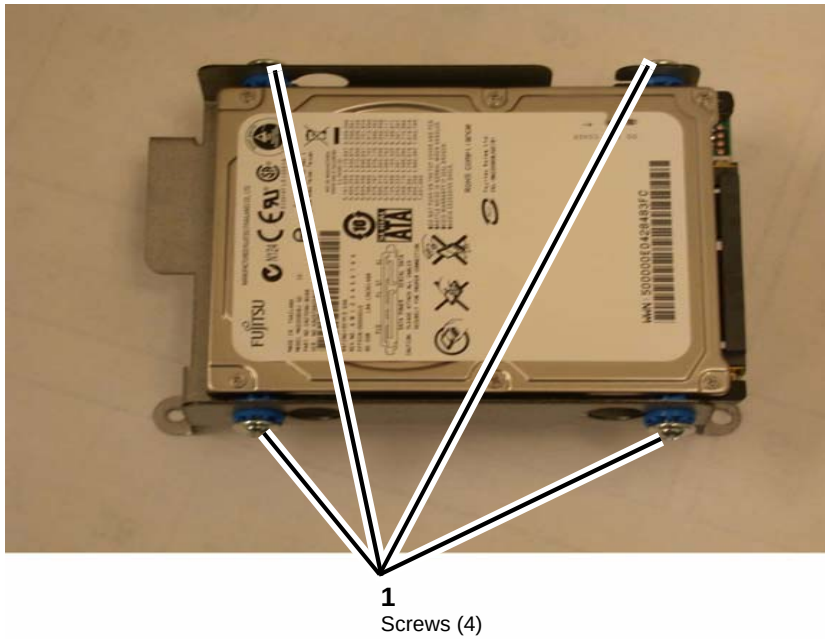

Figure 3 Removing Replacing the Disk Drive from the HDD chassis

2. Connect the connector (Figure 1).
3. After reassembling the machine, perform **Regular AltBoot** (GP 9).
4. Print a configuration page. Verify that all options are enabled.

REP 4.1 Main Drive Assembly (7525/30/35)

Parts List on PL 3.2

Removal

NOTE: *When turning the power OFF, turn OFF the Power Switch first and then the Main Power Switch.*

1. Press the **Job Status** button to check that there are no jobs in progress.
2. Switch off the power and disconnect the power cord.
3. Remove the Rear Lower Cover. (REP 14.3)
4. Open the PWB Chassis Unit. (REP 14.4)
5. Remove the Takeaway Clutch. (Figure 1)
   a. Release the wire harness from the clamp.
   b. Disconnect the connector.
   c. Remove the screws (x2).
   d. Remove the Bracket and Takeaway Clutch.

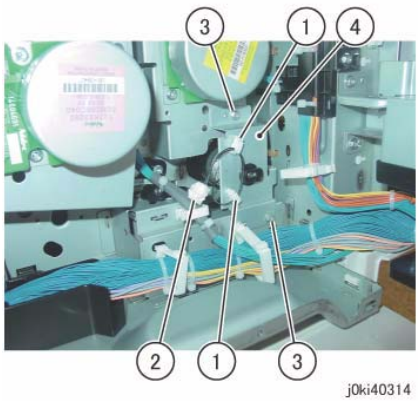

Figure 1 Remove the Takeaway Clutch

6. Remove the Main Drive Assembly. (Figure 2)
   a. Disconnect the connectors (x2).
   b. Remove the screws (x4).
   c. Remove the Main Drive Assembly.

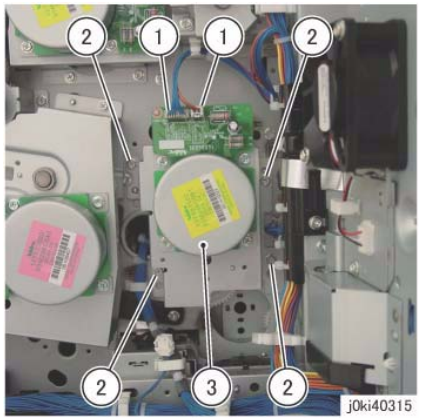

Figure 2 Remove the Main Drive Assy

Replacement

1. To install, carry out the removal steps in reverse order.
2. When installing the Takeaway Clutch, align the bosses (x4) of the bearing to the installation holes. (Figure 3)

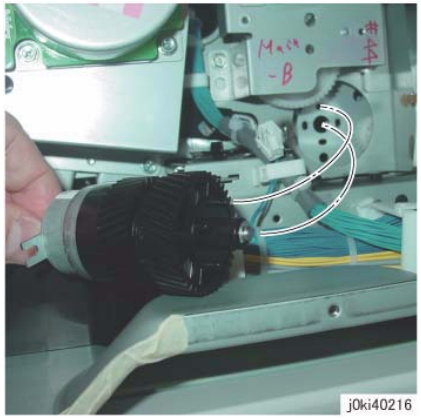

Figure 3 Install the Takeaway Clutch

3. When installing the Bracket, insert the Bracket into the tab of the Takeaway Clutch. (Figure 4)

Figure 4 Install the Bracket

REP 4.2 Main Drive Assembly (7545/56)

Parts List on PL 3.2

Removal

NOTE: *When turning the power OFF, turn OFF the Power Switch first and then the Main Power Switch.*

1. Press the **Job Status** button to check that there are no jobs in progress.
2. Switch off the power and disconnect the power cord.
3. Remove the Rear Lower Cover. (REP 14.3)
4. Open the PWB Chassis Unit. (REP 14.4)
5. Remove the Takeaway Motor. (Figure 1)
   a. Disconnect the connector.
   b. Remove the cable band.
   c. Remove the screws (x3).
   d. Release the clamp.
   e. Move the wire harness in the direction of the arrow.
   f. Remove the screw.
   g. Remove the Takeaway Motor.

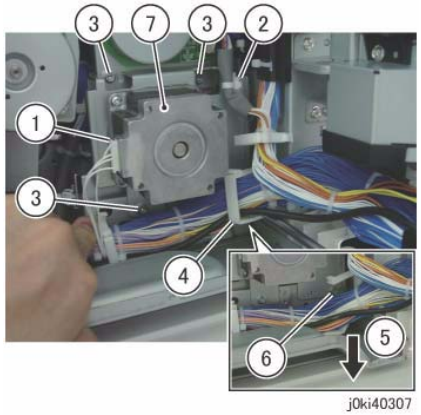

Figure 1 Remove the Takeaway Motor

6. Remove the gear and shaft. (Figure 2)
   a. Remove the gear and shaft.

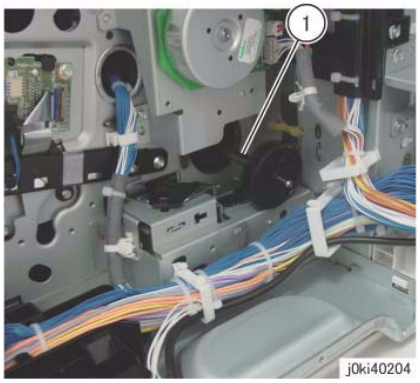

Figure 2 Remove the gear and shaft

7. Remove the Main Drive Assembly. (Figure 3)
   a. Disconnect the connectors (x2).
   b. Remove the screws (x4).
   c. Remove the Main Drive Assembly.

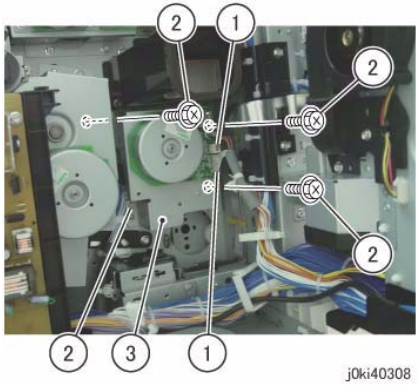

Figure 3 Remove the Main Drive Assy

Replacement

1. To install, carry out the removal steps in reverse order.
2. When installing the gear and shaft, align the bosses (x4) of the bearing to the installation holes. (Figure 4)

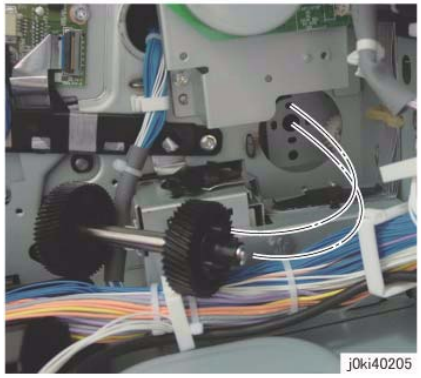

Figure 4 Install the gear and shaft

3. When installing the Takeaway Motor, align the shaft to the hole of the bearing. (Figure 5)

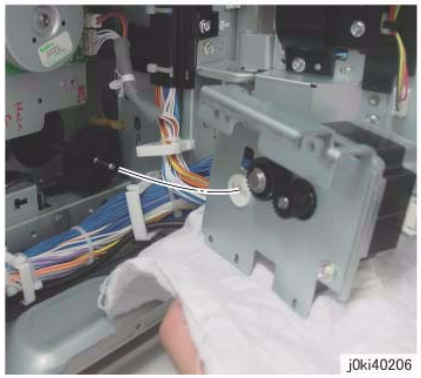

Figure 5 Install the Takeaway Motor

REP 4.3 Drum/Developer Drive Assembly (7525/30/35)

Parts List on PL 3.3A

Removal

NOTE: *When turning the power OFF, turn OFF the Power Switch first and then the Main Power Switch.*

NOTE: *When removing the Drum, cover it with a black sheet, etc. to prevent light fatigue.*

NOTE: *Do not touch the Drum surface with your hands.*

1. Press the **Job Status** button to check that there are no jobs in progress.
2. Switch off the power and disconnect the power cord.
3. Remove the Drum (Y, M, C, K). (REP 9.5)
4. Remove the Rear Lower Cover. (REP 14.3)
5. Open the PWB Chassis Unit. (REP 14.4)
6. Remove the HVPS (06A2). (REP 1.1)
7. Move the Harness Holder. (Figure 1)
   a. Disconnect the connectors (x4).
   b. Release the hook and move the Harness Holder.

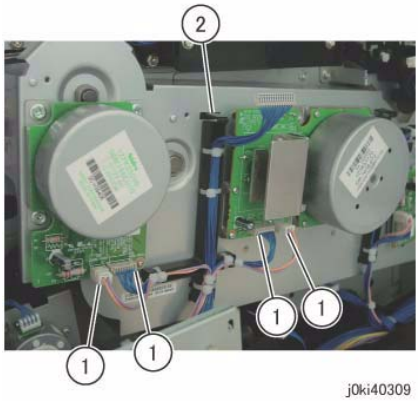

Figure 1 Move the Harness Holder

8. Move the Harness Holder. (Figure 2)
   a. Release the wire harness from the Harness Holder.
   b. Disconnect the connectors (x2).
   c. Disconnect the connectors (x2).
   d. Release the hook and move the Harness Holder.

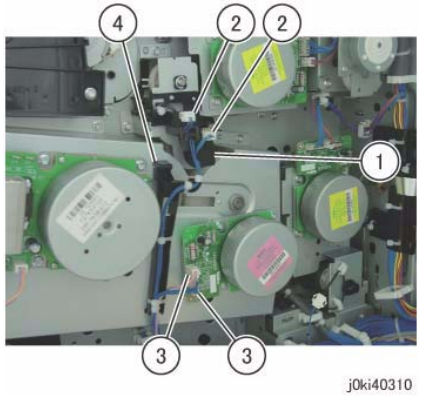

Figure 2 Move the Harness Holder

9. Remove the Rear Bottom Fan. (Figure 3)
   a. Disconnect the connector.
   b. Remove the screws (x2).
   c. Remove the Rear Bottom Fan.

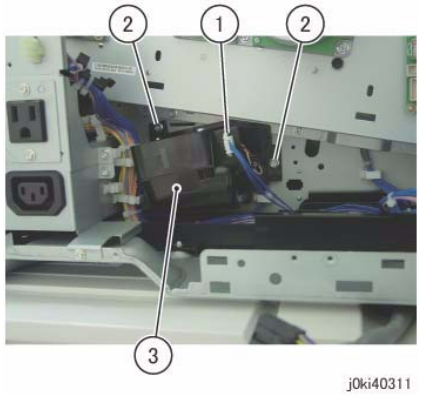

Figure 3 Remove the Rear Bottom Fan

10. Slide the Bracket. (Figure 4)
    a. Remove the screws (x3).
    b. Slide the Bracket.

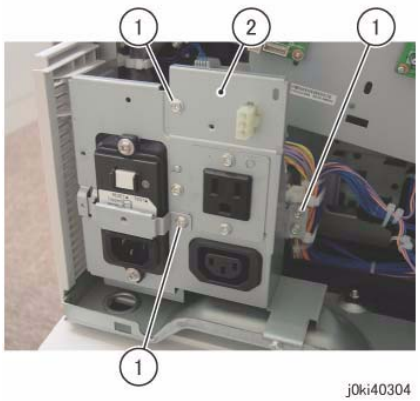

Figure 4 Slide the Bracket

11. Remove the Drum/Dev Drive Assembly. (Figure 5)
    a. Remove the screws (x6).
    b. Remove the Drum/Dev Drive Assembly.

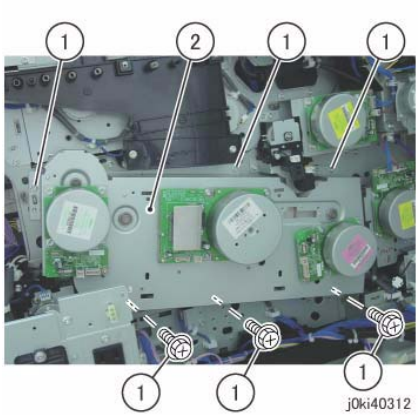

Figure 5 Remove the Drum/Dev Drive Assy

NOTE: *When placing the Drum/Dev Drive Assembly on the floor, place it with its Motor section facing downwards. (Figure 6)*

Figure 6 Place the Motor section facing downwards

Replacement

1. To install, carry out the removal steps in reverse order.

REP 4.4 Drum/Developer Drive Assembly (7545/56)

Parts List on PL 3.3B

Removal

NOTE: *When turning the power OFF, turn OFF the Power Switch first and then the Main Power Switch.*

NOTE: *When removing the Drum, cover it with a black sheet, etc. to prevent light fatigue.*

NOTE: *Do not touch the Drum surface with your hands.*

1. Press the **Job Status** button to check that there are no jobs in progress.
2. Switch off the power and disconnect the power cord.
3. Remove the Drum (Y, M, C, K). (REP 9.5)
4. Remove the Rear Lower Cover. (REP 14.3)
5. Open the PWB Chassis. (REP 14.4)
6. Remove the LVPS (Dev). (REP 1.2)
7. Remove the HVPS (06A2). (REP 1.1)
8. Move the Harness Holder. (Figure 1)
   a. Disconnect the connectors (x4).
   b. Release the hook and move the Harness Holder.

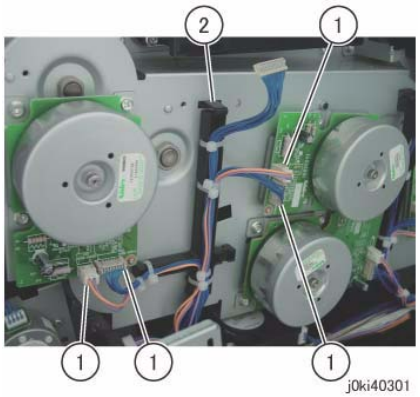

Figure 1 Move the Harness Holder

9. Move the Harness Holder. (Figure 2)
   a. Release the wire harness from the Harness Holder.
   b. Disconnect the connectors (x2).
   c. Disconnect the connectors (x4).
   d. Release the hook and move the Harness Holder.

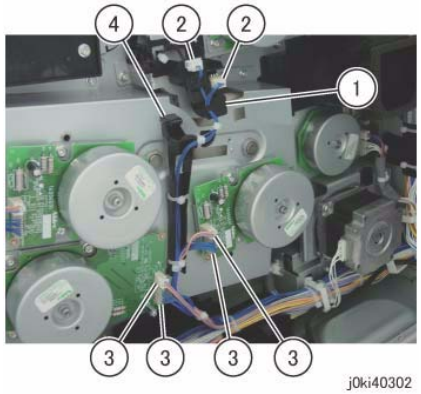

Figure 2 Move the Harness Holder

10. Remove the Rear Bottom Fan. (Figure 3)
    a. Disconnect the connector.
    b. Remove the screws (x2).
    c. Remove the Rear Bottom Fan.

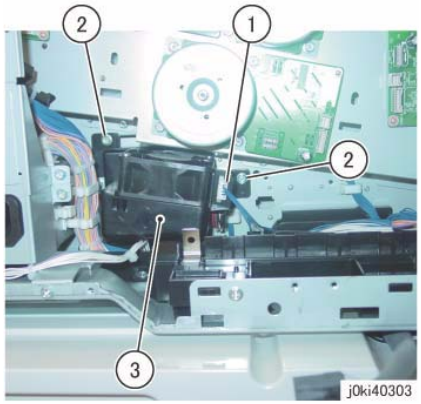

Figure 3 Remove the Rear Bottom Fan

11. Slide the Bracket. (Figure 4)
    a. Remove the screws (x3).
    b. Slide the Bracket.

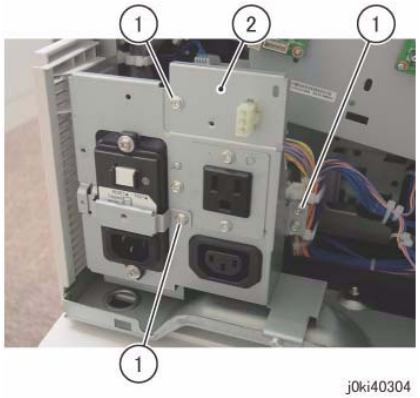

Figure 4 Slide the Bracket

12. Remove the Drum/Dev Drive Assembly. (Figure 5)
    a. Remove the screws (x6).
    b. Remove the Drum/Dev Drive Assembly.

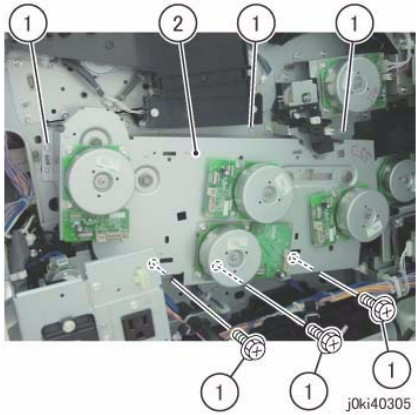

Figure 5 Remove the Drum/Dev Drive Assy

NOTE: *When placing the Drum/Dev Drive Assembly on the floor, place it with its Motor section facing downwards. (Figure 6)*

Figure 6 Place the Motor section facing downwards

Replacement

1. To install, carry out the removal steps in reverse order.

REP 5.1 DADF

Parts List on PL 51.1

Removal

NOTE: *When turning the power OFF, turn OFF the Power Switch first and then the Main Power Switch.*

1. Press the **Job Status** button to check that there are no jobs in progress.
2. Switch off the power and disconnect the power cord.
3. Loosen the screws (x2) and disconnect the connector. (Figure 1)
   a. Disconnect the connector.

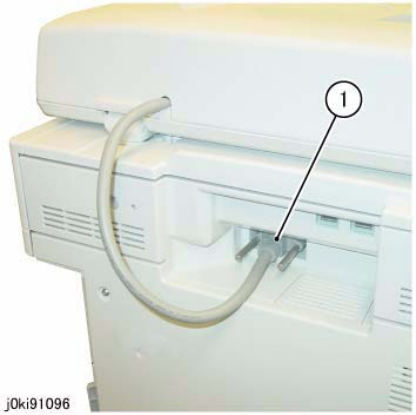

Figure 1 Disconnect the connector

4. Remove the DADF. (Figure 2)
   a. Tilt the Counter Balance in the direction of the arrow and remove it from the installation holes.

Figure 2 Remove the DADF

Replacement

1. To install, carry out the removal steps in reverse order.
2. Install the DADF. (Figure 3)
   a. Insert the tabs of the Counter Balance into the grooves of the installation holes.

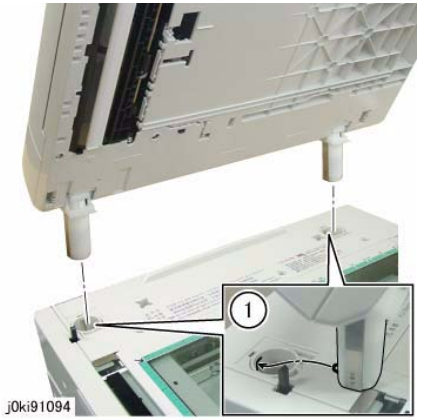

Figure 3 Install the DADF

3. Perform the DADF Original Detection Correction when replacing the DADF. (Refer to ADJ 5.2 DADF Original Detection Correction.)

REP 5.2 DADF Platen Cushion

Parts List on PL 51.1

Removal

NOTE: *When turning the power OFF, turn OFF the Power Switch first and then the Main Power Switch.*

NOTE: *The DADF Platen Cushion is pasted on with double sided adhesive tapes.*

1. Press the **Job Status** button to check that there are no jobs in progress.
2. Switch off the power and disconnect the power cord.
3. Peel off the DADF Platen Cushion. (Figure 1)
   a. Remove the DADF Platen Cushion.

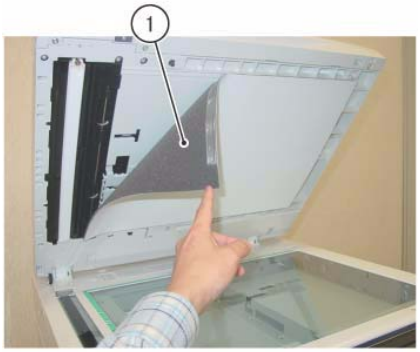

j0ki45107

Figure 1 Remove the DADF Platen Cushion

Replacement

1. Paste on the DADF Platen Cushion. (Figure 2)
   a. Place the DADF Platen Cushion on the Platen Glass.
   b. Set the gap between the Reg Guide and Platen Guide.
   c. Slowly lower the DADF and press it onto the DADF Platen Cushion.

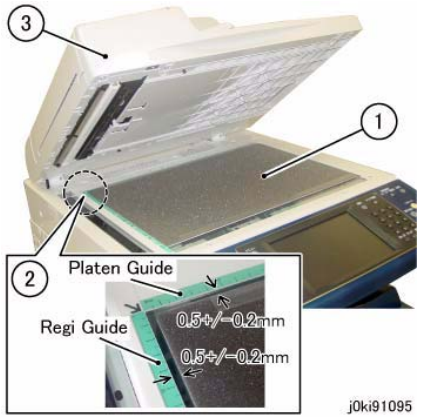

Figure 2 Paste on the DADF Platen Cushion

REP 5.3 DADF Front Cover

Parts List on PL 51.2

Removal

NOTE: *When turning the power OFF, turn OFF the Power Switch first and then the Main Power Switch.*

1. Press the **Job Status** button to check that there are no jobs in progress.
2. Switch off the power and disconnect the power cord.
3. Open the Top Cover.
4. Open the DADF.
5. Remove the DADF Front Cover. (Figure 1)
   a. Remove the Tapping Screws (x4).
   b. Remove the DADF Front Cover.

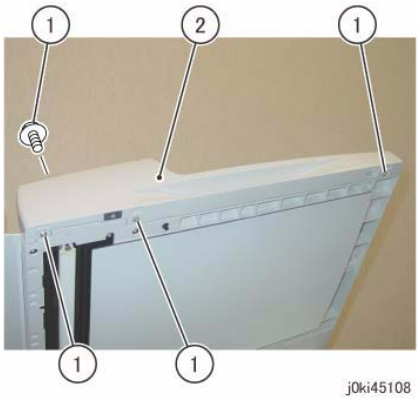

Figure 1 Remove the DADF Front Cover

Replacement

1. To install, carry out the removal steps in reverse order.

REP 5.4 DADF Rear Cover

Parts List on PL 51.2

Removal

NOTE: *When turning the power OFF, turn OFF the Power Switch first and then the Main Power Switch.*

1. Press the **Job Status** button to check that there are no jobs in progress.
2. Switch off the power and disconnect the power cord.
3. Turn the DADF Document Tray upside down. (Figure 1)
   a. Open the Top Cover.
   b. Turn the DADF Document Tray upside down.

Figure 1 Turn the DADF Document Tray upside down

4. Remove the screws that secure the DADF Rear Cover. (Figure 2)
   a. Remove the screws (x2).

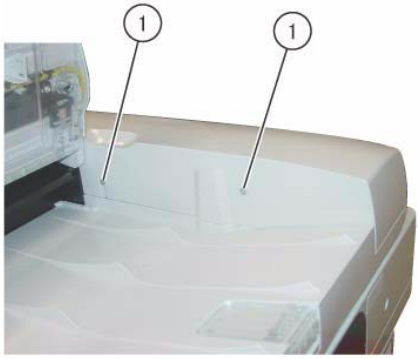

Figure 2 Remove the screws

5. Open the DADF.
6. Release the hooks on the DADF Rear Cover. (Figure 3)
   a. Release the hooks (x2).

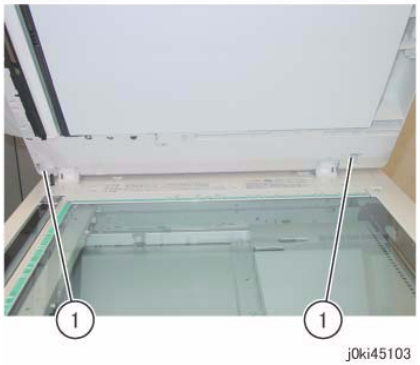

Figure 3 Release the hooks

7. Close the DADF gently.
8. Remove the DADF Rear Cover. (Figure 4)
   a. Remove the DADF Rear Cover in the direction of the arrow.
   (A) Hook

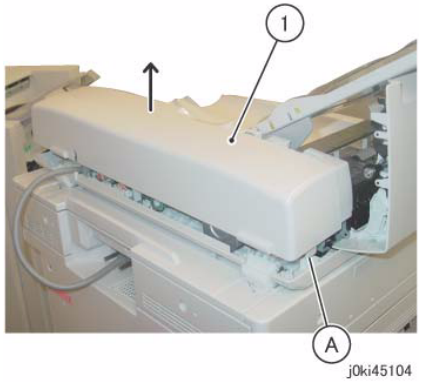

Figure 4 Remove the DADF Rear Cover

Replacement

1. To install, carry out the removal steps in reverse order.

REP 5.5 DADF Feeder Assembly

Parts List on PL 51.2

Removal

NOTE: *When turning the power OFF, turn OFF the Power Switch first and then the Main Power Switch.*

1. Press the **Job Status** button to check that there are no jobs in progress.
2. Switch off the power and disconnect the power cord.
3. Remove the DADF Front Cover. (REP 5.3)
4. Remove the DADF Rear Cover. (REP 5.4)
5. Remove the DADF. (REP 5.1)
6. Remove the DADF Document Tray. (REP 5.19)
7. Disconnect the DADF PWB connectors. (Figure 1)
   a. Disconnect the connectors (x4).
   b. Remove the Tapping Screw and the Ground Wire.

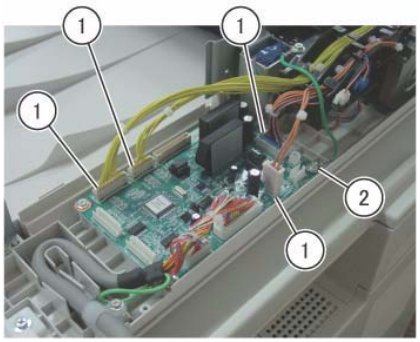

j0ki45113

Figure 1 Disconnect the connectors

8. Remove the DADF Feeder Assembly. (Figure 2)
   a. Remove the Tapping Screw.
   b. Remove the DADF Feeder Assembly in the direction of the arrow.

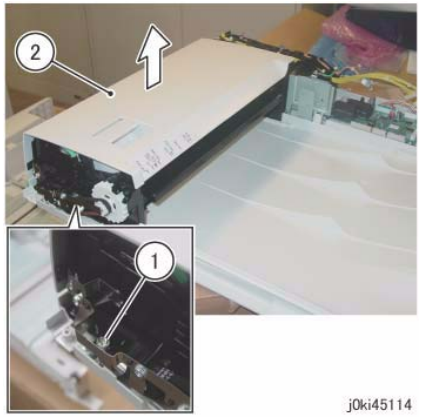

j0ki45114

Figure 2 Remove the DADF Feeder Assy

Replacement

1. To install, carry out the removal steps in reverse order.
2. Align the positioning pin of the Base Frame and the hole of the FADF Feeder Assembly. (Figure 3)

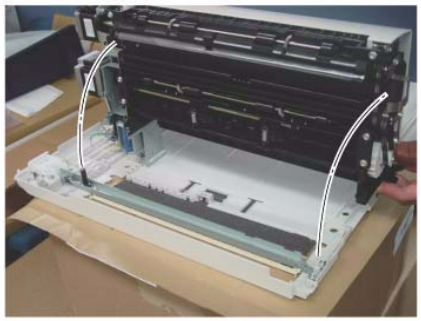

j0ki45115

Figure 3 Align the positioning pin

3. When installing the DADF Feeder Assembly to the Base Frame, check the following A and B.
   Figure 4)
   (A)At the front: The Frame of the DADF Feeder Assembly is attached to the positioning pin of the Base Frame as shown in the figure.
   (B)The Bracket of the DADF Feeder Assembly is attached to the support of the Base Frame as shown in the figure.

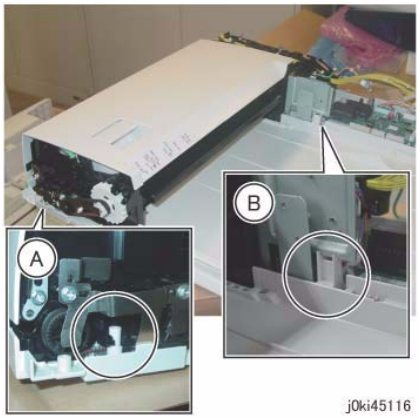

Figure 4 Check the following (A) and (B)

4. After a replacement, enter the Diagnostics Mode and use "Initialize HFSI Counter" to clear the HFSI counter.
   - Chain Link: 955-806

REP 5.6 DADF PWB

Parts List on PL 51.2

Removal

NOTE: *When turning the power OFF, turn OFF the Power Switch first and then the Main Power Switch.*

1. Press the **Job Status** button to check that there are no jobs in progress.
2. Switch off the power and disconnect the power cord.
3. Remove the DADF Rear Cover. (REP 5.4)
4. Remove the Bracket. (PL 51.2)
5. Remove the DADF-IIT Cable from the guide of the Base Frame. (Figure 1)

Figure 1 Remove the DADF-IIT Cable

6. Disconnect the DADF PWB connectors. (Figure 2)
   a. Disconnect the connectors (x7).

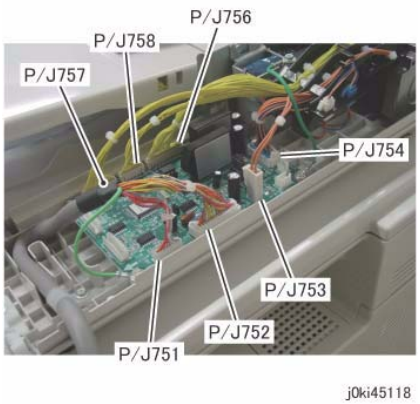

Figure 2 Disconnect the connectors

7. Remove the DADF PWB. (Figure 3)
   a. Remove the Tapping Screws (x2) and the Ground Wires (x2).
   b. Remove the Tapping Screws (x2).
   c. Remove the DADF PWB.

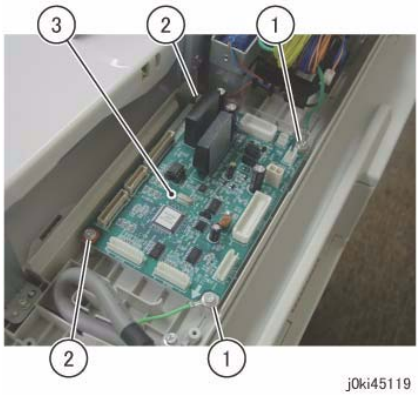

Figure 3 Remove the DADF PWB

Replacement

1. To install, carry out the removal steps in reverse order.
2. Switch the ROM on the new PWB with the EEP ROM from the old PWB. (Figure 4)
   This is because it stores the alignment value of the DADF.

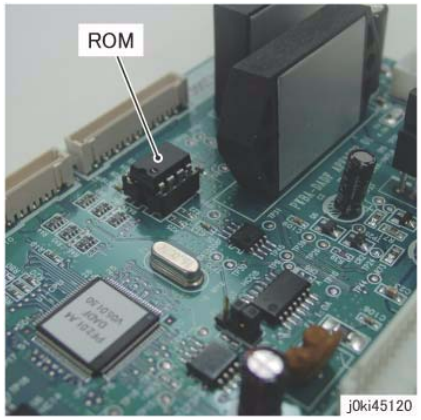

Figure 4 Switching the EEP ROM

3. Check the software version. Update the version if an old software is installed in the new PWB.

REP 5.7 Left Counter Balance

Parts List on PL 51.3

Removal

NOTE: *When turning the power OFF, turn OFF the Power Switch first and then the Main Power Switch.*

CAUTION

Left/Right Counter Balance is identified by its spring pressure.

- *Left Counter Balance: strong spring pressure*
- *Right Counter Balance: weak spring pressure*

1. Press the **Job Status** button to check that there are no jobs in progress.
2. Switch off the power and disconnect the power cord.
3. Remove the DADF Front Cover. (REP 5.3)
4. Remove the DADF Rear Cover. (REP 5.4)
5. Remove the DADF. (REP 5.1)
6. Remove the DADF Document Tray. (REP 5.19)
7. Remove the DADF Feeder Assembly. (REP 5.5)
8. Remove the screws that secure the Tie Plate. (Figure 1)
   a. Remove the Tapping Screw.
   b. Remove the Ground Plate.
   c. Remove the Tapping Screws (x2).

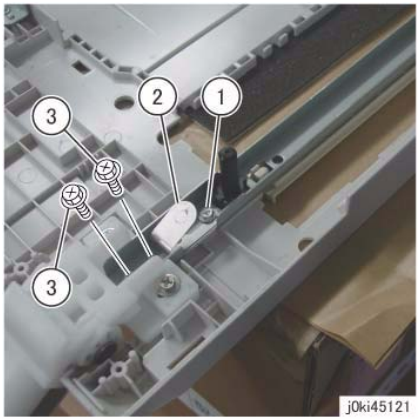

Figure 1 Remove the screws and Ground Plate

9. Remove the Left Counter Balance. (Figure 2)
   a. Remove the Tapping Screws (Large: x2).
   b. Remove the Left Counter Balance.

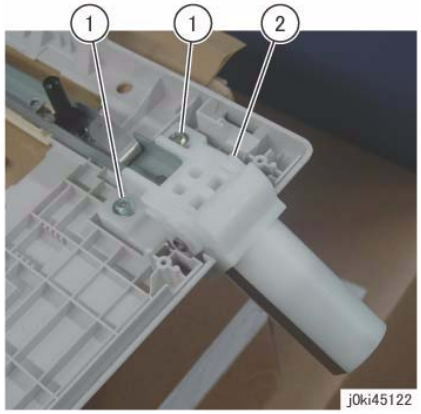

Figure 2 Remove the Left Counter Balance

Replacement

1. To install, carry out the removal steps in reverse order.
2. When installing the Left Counter Balance, align the hole of the Left Counter Balance to the positioning boss of the Frame. (Figure 3)

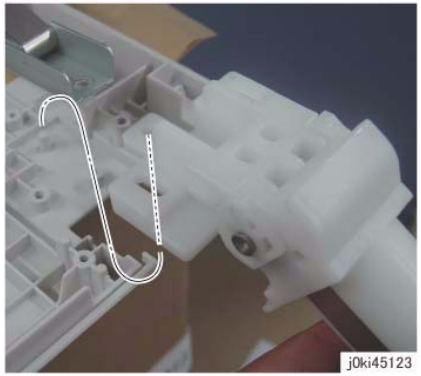

Figure 3 Installing the Left Counter Balance

3. Align the Ground Plate to the positioning boss. (Figure 4)

Figure 4 Align the Ground Plate

REP 5.8 Right Counter Balance

Parts List on PL 51.3

Removal

NOTE: *When turning the power OFF, turn OFF the Power Switch first and then the Main Power Switch.*

CAUTION

Left/Right Counter Balance is identified by its spring pressure.

- *Left Counter Balance: strong spring pressure*
- *Right Counter Balance: weak spring pressure*

1. Press the **Job Status** button to check that there are no jobs in progress.
2. Switch off the power and disconnect the power cord.
3. Remove the DADF Rear Cover. (REP 5.4)
4. Remove the DADF. (REP 5.1)
5. Take note of the graduation of the scale. (Figure 1)

Figure 1 Note the graduation of the scale

6. Remove the Right Counter Balance. (Figure 2)
   a. Remove the Tapping Screws (Large: x3).
   b. Remove the right Counter Balance.

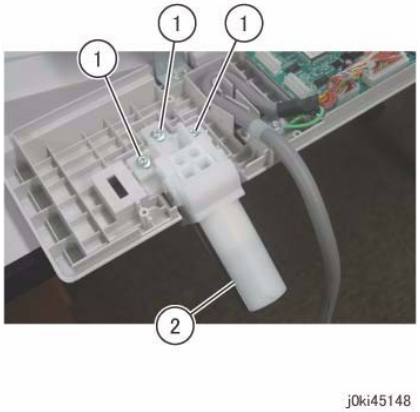

Figure 2 Remove the Right Counter Balance

Replacement

1. To install, carry out the removal steps in reverse order.
2. If it was replaced, perform checking for DADF Lead-Skew Adjustment. (ADJ 5.1)

REP 5.9 DADF Document Tray

Parts List on PL 51.4

Removal

1. Remove the DADF Front Cover. (REP 5.3)
2. Remove the DADF Rear Cover. (REP 5.4)
3. Disconnect the connector of the DADF Document Set LED. (Figure 1)
   a. Remove the Tapping Screw.
   b. Remove the LED Bracket.
   c. Remove the wire harness from the hook.
   d. Disconnect the connector.

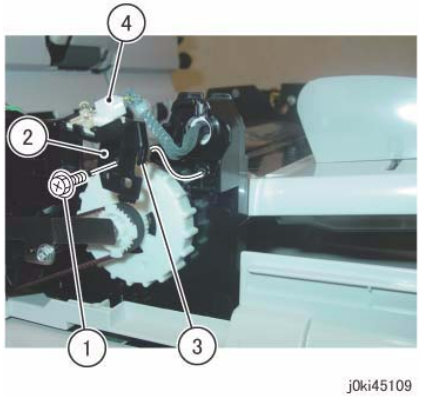

Figure 1 Disconnect the connector

4. Disconnect the connector. (Figure 2)
   a. Remove the clamp.
   b. Disconnect the connector of the P/J756.
   c. Remove the P/J756 wire harness from the Harness Guide.

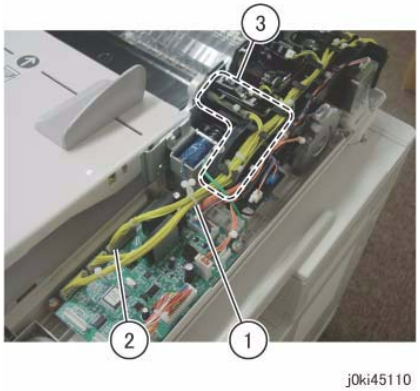

Figure 2 Disconnect the connectors

5. At the front side of the DADF Document Tray, remove the boss of the DADF Document Tray from the installation hole of the Frame. (Figure 3)
   a. Position the DADF Document Tray vertically.
   b. Press the boss of the DADF Document Tray in the direction of the arrow and remove it from the installation hole.
   c. Remove the wire harness of the DADF Document Set LED from the groove of the Frame.

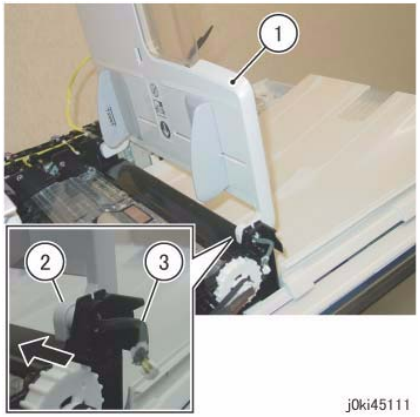

Figure 3 Remove the boss of the DADF Document Tray

6. Pull out and remove the wire harness at the rear side of the DADF Document Tray from the hole of the Frame. (Figure 4)
   a. Pull out and remove the wire harness through the hole on the Frame.

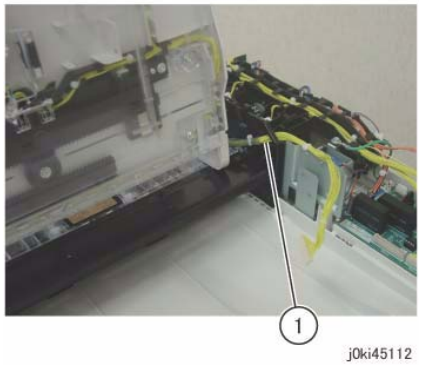

Figure 4 Remove the wire harness from the hole

Replacement

1. To install, carry out the removal steps in reverse order.

REP 5.10 Top Cover

Parts List on PL 51.4

Removal

NOTE: *When turning the power OFF, turn OFF the Power Switch first and then the Main Power Switch.*

1. Press the **Job Status** button to check that there are no jobs in progress.
2. Switch off the power and disconnect the power cord.
3. Remove the DADF Front Cover. (REP 5.3)
4. Remove the DADF Rear Cover. (REP 5.4)
5. Remove the DADF. (REP 5.1)
6. Remove the DADF Document Tray. (REP 5.19)
7. Remove the DADF Feeder Assembly. (REP 5.5)
8. Remove the Reg Chute. (REP 5.14)
9. Open the Top Cover.
10. Remove the Top Cover. (Figure 1)
    a. Remove the Tapping Screw.
    b. Remove the Stud Bracket.
    c. Remove the Top Cover.

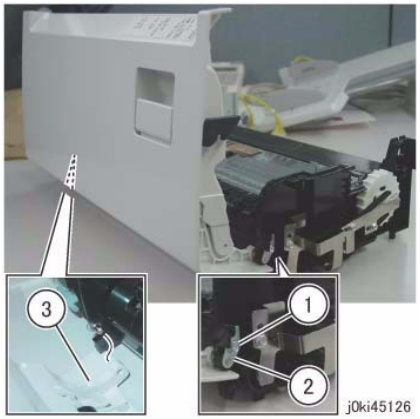

Figure 1 Remove the Top Cover

Replacement

1. To install, carry out the removal steps in reverse order.

REP 5.11 Harness Guide and Wire Harness

Parts List on PL 51.5

Removal

NOTE: *When turning the power OFF, turn OFF the Power Switch first and then the Main Power Switch.*

1. Press the **Job Status** button to check that there are no jobs in progress.
2. Switch off the power and disconnect the power cord.
3. Remove the DADF Front Cover. (REP 5.3)
4. Remove the DADF Rear Cover. (REP 5.4)
5. Remove the DADF. (REP 5.1)
6. Remove the DADF Document Tray. (REP 5.19)
7. Remove the DADF Feeder Assembly. (REP 5.5)
8. Remove the Reg Chute. (REP 5.14)
9. Remove the Top Cover. (REP 5.19)
10. Remove the wire harness from the Harness Guide. (Figure 1)
    a. Disconnect the connectors (x2).
    b. Remove the wire harness from the Harness Guide.

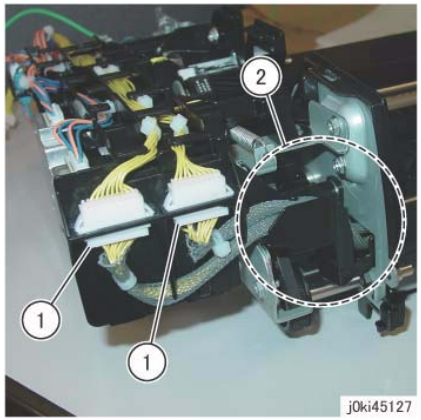

Figure 1 Remove the wire harness from the Harness Guide

11. Remove the wire harness from the Harness Guide. (Figure 2)
    a. Remove the J753 wire harness from the Harness Guide.

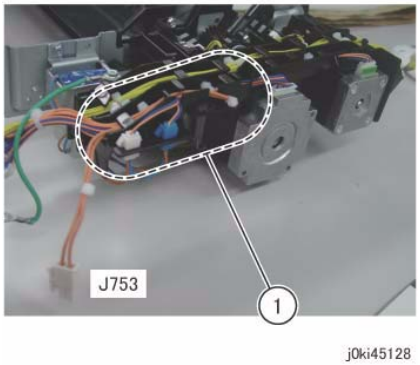

Figure 2 Remove the wire harness from the Harness Guide

12. Remove the wire harness of the solenoid from the Harness Guide. (Figure 3)
    a. Disconnect the connector (Blue).
    b. Disconnect the connector (White).
    c. Remove the wire harness from the Harness Guide.

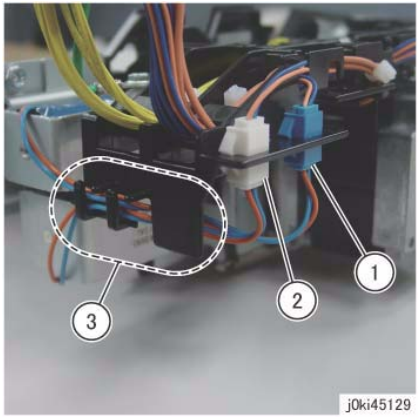

Figure 3 Remove the wire harness from the Harness Guide

13. Disconnect the connector. (Figure 4)
    a. Disconnect the connectors (x4).

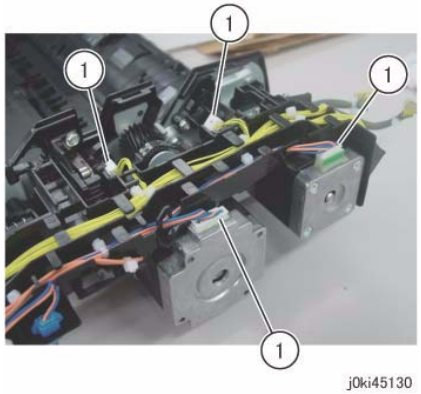

Figure 4 Disconnect the connectors

14. Remove the Harness Guide and the wire harness. (Figure 5)
    a. Remove the screw.
    b. Remove the screw and the Ground Wire.
    c. Remove the Harness Guide and the wire harness.

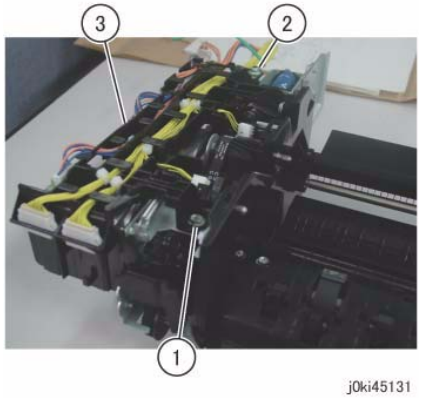

Figure 5 Remove the wire harness from the Harness Guide

Replacement

1. To install, carry out the removal steps in reverse order.
2. Hang the J753 wire harness to the hook (A). (Figure 6)
   (A)Hook

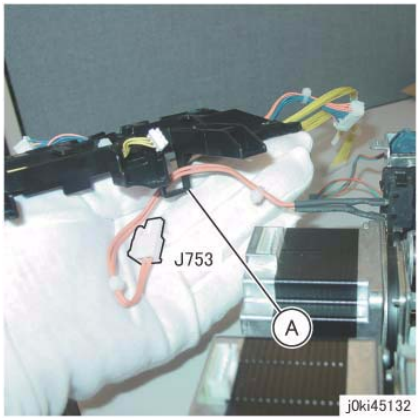

Figure 6 Hang the wire harness on the hook

REP 5.12 DADF Registration Motor

Parts List on PL 51.5

Removal

NOTE: *When turning the power OFF, turn OFF the Power Switch first and then the Main Power Switch.*

1. Press the **Job Status** button to check that there are no jobs in progress.
2. Switch off the power and disconnect the power cord.
3. Remove the DADF Front Cover. (REP 5.3)
4. Remove the DADF Rear Cover. (REP 5.4)
5. Remove the DADF. (REP 5.1)
6. Remove the DADF Document Tray. (REP 5.19)
7. Remove the DADF Feeder Assembly. (REP 5.5)
8. Remove the Reg Chute. (REP 5.14)
9. Remove the Top Cover. (REP 5.19)
10. Remove the Harness Guide and the wire harness. (REP 5.11)
11. Remove the DADF Reg Motor. (Figure 1)
    a. Remove the spring.
    b. Remove the screws (x2).
    c. Remove the DADF Reg Motor.

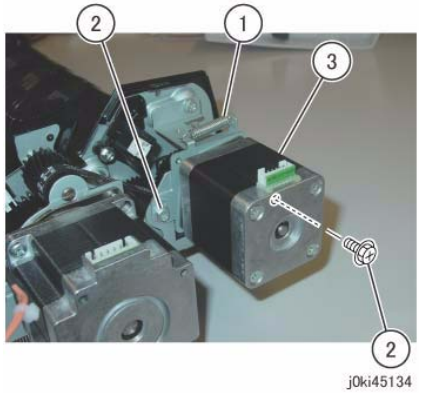

Figure 1 Remove the DADF Reg Motor

Replacement

1. To install, carry out the removal steps in reverse order.
2. Install the Belt (A) to the Pulley of the DADF Reg Motor. (Figure 2)
   (A)Belt

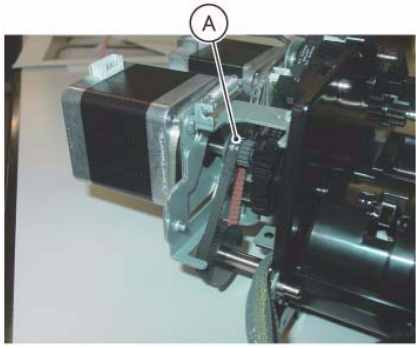

Figure 2 Install the Belt

REP 5.13 DADF Feed Motor

Parts List on PL 51.5

Removal

NOTE: *When turning the power OFF, turn OFF the Power Switch first and then the Main Power Switch.*

1. Press the **Job Status** button to check that there are no jobs in progress.
2. Switch off the power and disconnect the power cord.
3. Remove the DADF Front Cover. (REP 5.3)
4. Remove the DADF Rear Cover. (REP 5.4)
5. Remove the DADF. (REP 5.1)
6. Remove the DADF Document Tray. (REP 5.19)
7. Remove the DADF Feeder Assembly. (REP 5.5)
8. Remove the Reg Chute. (REP 5.14)
9. Remove the Top Cover. (REP 5.19)
10. Remove the Harness Guide and the wire harness. (REP 5.11)
11. Turn the DADF Feeder Assembly upside down.
12. Remove the DADF Feed Motor. (Figure 1)
    a. Remove the spring.
    b. Remove the screws (x2).
    c. Remove the DADF Feed Motor.

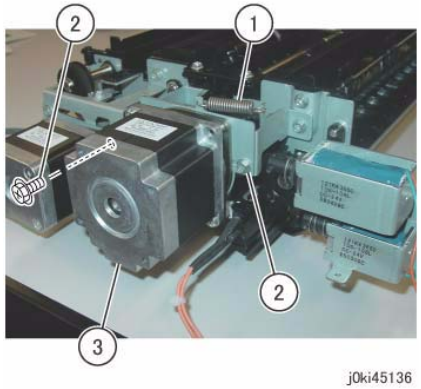

Figure 1 Remove the DADF Feed Motor

Replacement

1. To install, carry out the removal steps in reverse order.
2. Install the Belt to the Pulley of the DADF Feed Motor. (Figure 2)

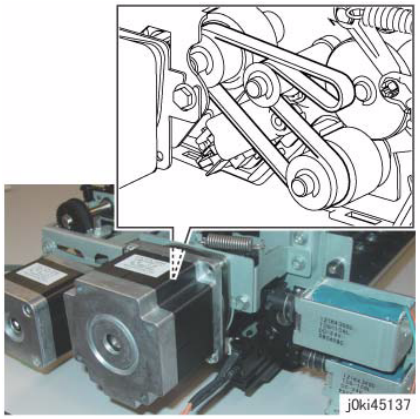

Figure 2 Install the Belt

REP 5.14 Reg Chute

Parts List on PL 51.8

Removal

NOTE: *When turning the power OFF, turn OFF the Power Switch first and then the Main Power Switch.*

1. Press the **Job Status** button to check that there are no jobs in progress.
2. Switch off the power and disconnect the power cord.
3. Remove the DADF Front Cover. (REP 5.3)
4. Remove the DADF Rear Cover. (REP 5.4)
5. Remove the DADF. (REP 5.1)
6. Remove the DADF Document Tray. (REP 5.19)
7. Remove the DADF Feeder Assembly. (REP 5.5)
8. Turn the DADF Feeder Assembly upside down.
9. Remove the Reg Chute. (Figure 1)
   a. Remove the Tapping Screws (x2).
   b. Remove the Reg Chute.

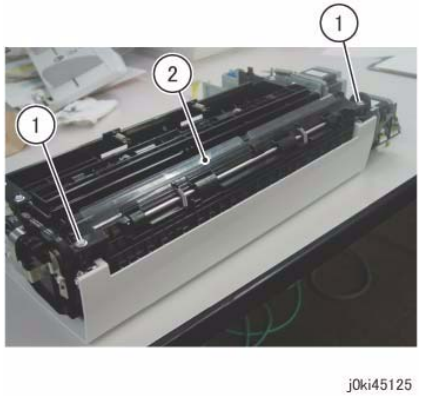

Figure 1 Remove the Reg Chute

Replacement

1. To install, carry out the removal steps in reverse order.

REP 5.15 Retard Chute

Parts List on PL 51.8

Removal

NOTE: *When turning the power OFF, turn OFF the Power Switch first and then the Main Power Switch.*

1. Press the **Job Status** button to check that there are no jobs in progress.
2. Switch off the power and disconnect the power cord.
3. Remove the DADF Front Cover. (REP 5.3)
4. Remove the DADF Rear Cover. (REP 5.4)
5. Remove the DADF Document Tray. (REP 5.19)
6. Open the Retard Chute.
7. Remove the Retard Chute. (Figure 1)
   a. Remove the Retard Chute in the direction of the arrow.

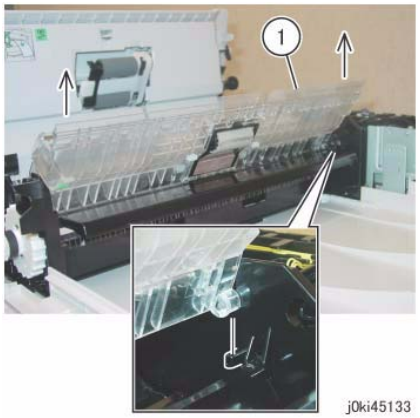

Figure 1 Remove the Retard Chute

Replacement

1. To install, carry out the removal steps in reverse order.

REP 5.16 Takeaway Roll

Parts List on PL 51.9

Removal

NOTE: *When turning the power OFF, turn OFF the Power Switch first and then the Main Power Switch.*

1. Press the **Job Status** button to check that there are no jobs in progress.
2. Switch off the power and disconnect the power cord.
3. Remove the DADF Front Cover. (REP 5.3)
4. Remove the DADF Rear Cover. (REP 5.4)
5. Remove the DADF. (REP 5.1)
6. Remove the DADF Document Tray. (REP 5.19)
7. Remove the DADF Feeder Assembly. (REP 5.5)
8. Remove the Reg Chute. (REP 5.14)
9. Remove the Top Cover. (REP 5.19)
10. Remove the Harness Guide and the wire harness. (REP 5.11)
11. Loosen the Belt tension of the DADF Reg Motor. (Figure 1)
    a. Loosen the screws (x2).

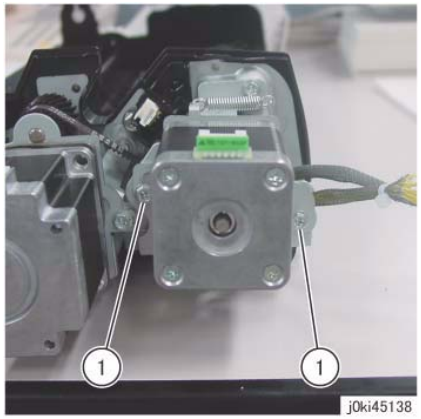

Figure 1 Loosen the Belt tension

12. Remove the DADF Reg Motor and the Bracket. (Figure 2)
    a. Remove the spring.
    b. Remove the screws (x2).
    c. Remove the DADF Reg Motor and the Bracket.
    d. Remove the Belt.

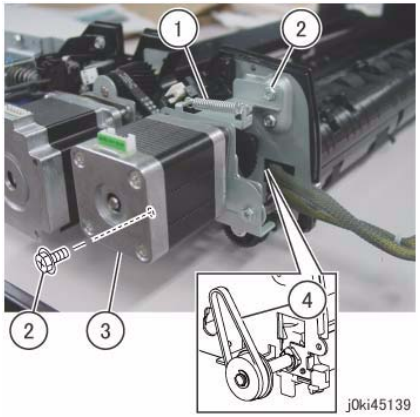

Figure 2 Remove the DADF Reg Motor and Bracket

13. Remove the Invert Chute. (Figure 3)
    a. Remove the Tapping Screws (x2).
    b. Remove the Invert Chute.

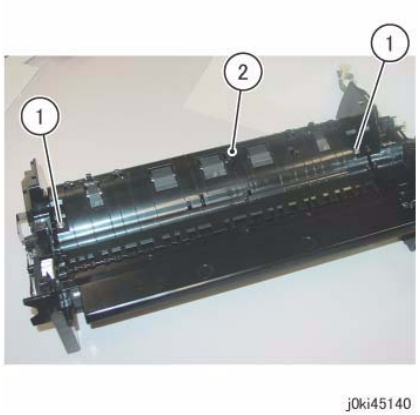

Figure 3 Remove the Invert Chute

14. Remove the gear at the rear. (Figure 4)
    a. Remove the E-Clip.
    b. Remove the gear.

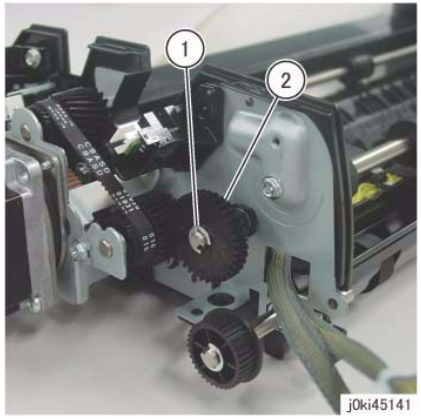

Figure 4 Remove the gear

15. Remove the bearing at the rear. (Figure 5)
    a. Remove the E-Clip.
    b. Remove the bearing.

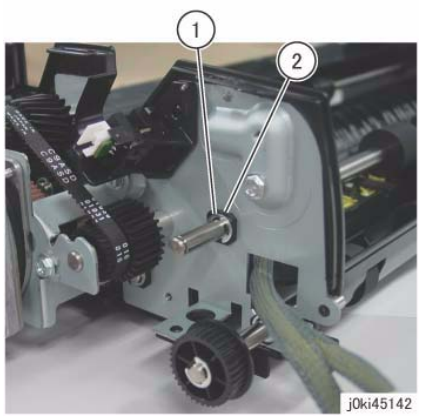

Figure 5 Remove the bearing

16. Remove the Ground Plate at the front. (Figure 6)
    a. Remove the Tapping Screws (x3).
    b. Remove the Ground Plate.

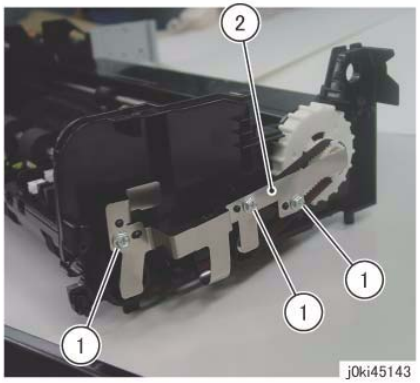

Figure 6 Remove the Ground Plate

17. Remove the bearing at the front. (Figure 7)
    a. Remove the E-Clip.
    b. Remove the bearing.

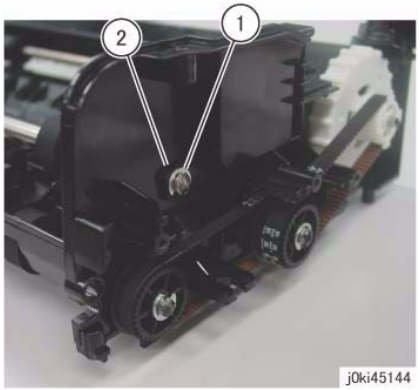

Figure 7 Remove the bearing

18. Remove the Takeaway Roll. (Figure 8)
    a. Remove the Takeaway Roll.

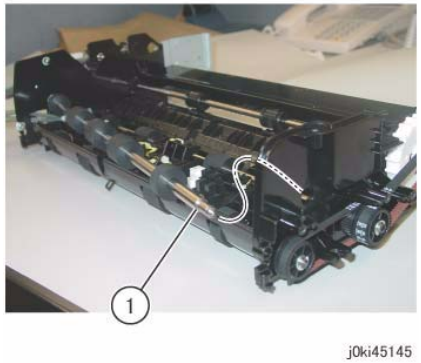

Figure 8 Remove the Takeaway Roll

Replacement

1. To install, carry out the removal steps in reverse order.
2. Install the Belt (A) to the Pulley of the DADF Reg Motor. (Figure 9)
   (A) Belt

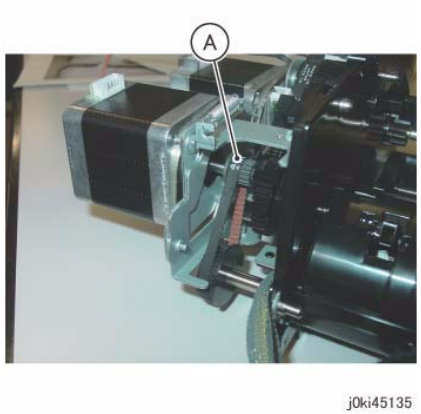

Figure 9 Install the Belt

REP 5.17 Sensor Bracket

Parts List on PL 51.9

Removal

NOTE: *When turning the power OFF, turn OFF the Power Switch first and then the Main Power Switch.*

1. Press the **Job Status** button to check that there are no jobs in progress.
2. Switch off the power and disconnect the power cord.
3. Remove the DADF Front Cover. (REP 5.3)
4. Remove the DADF Rear Cover. (REP 5.4)
5. Remove the DADF. (REP 5.1)
6. Remove the DADF Document Tray. (REP 5.19)
7. Remove the DADF Feeder Assembly. (REP 5.5)
8. Remove the Reg Chute. (REP 5.14)
9. Remove the Top Cover. (REP 5.19)
10. Remove the Harness Guide and the wire harness. (REP 5.11)
11. Remove the Takeaway Roll. (REP 5.16)
12. Remove the Sensor Bracket. (Figure 1)
    a. Remove the Tapping Screws (x4).
    b. Disconnect the connector.
    c. Remove the Sensor Bracket.
    d. Pull out and remove the wire harnesses (x2) through the hole on the Frame.

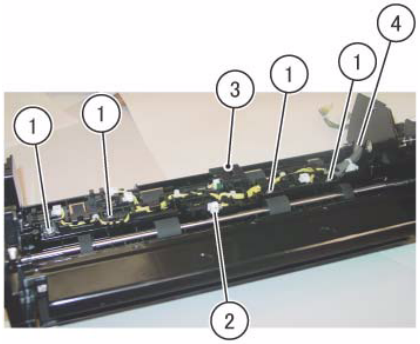

Figure 1 Remove the Sensor Bracket

Replacement

1. To install, carry out the removal steps in reverse order.

REP 5.18 Nudger Roll, Feed Roll

Parts List on PL 51.12

Removal

NOTE: *When turning the power OFF, turn OFF the Power Switch first and then the Main Power Switch.*

1. Press the **Job Status** button to check that there are no jobs in progress.
2. Switch off the power and disconnect the power cord.
3. Open the Top Cover.
4. Open the Feed Upper Chute. (Figure 1)
    a. Release the hook and open the Feed Upper Chute.

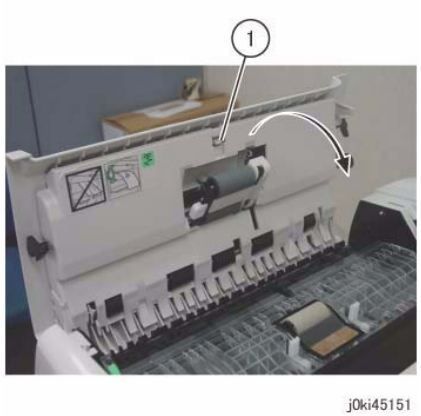

Figure 1 Open the Feed Upper Chute

5. Shift the housing. (Figure 2)
    a. Release the hook and shift the housing in the direction of the arrow.

Figure 2 Shift the housing

6. Remove the housing. (Figure 3)
   a. Remove the housing in the direction of the arrow.

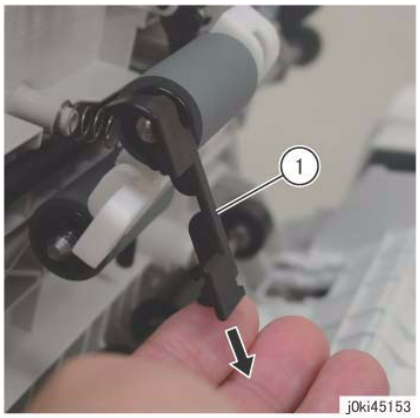

Figure 3 Remove the housing

7. Remove the Nudger Roll and the Feed Roll. (Figure 4)
   a. Remove the Nudger Roll.
   b. Remove the Feed Roll.

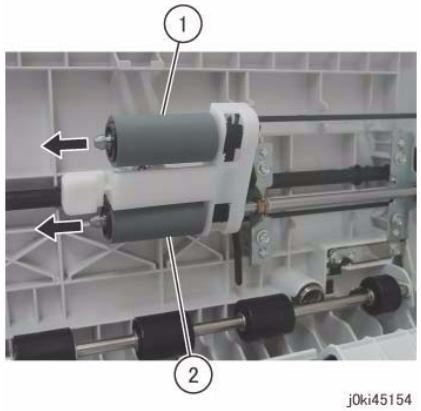

Figure 4 Remove the Nudger Roll and Feed Roll

Replacement

1. To install, carry out the removal steps in reverse order.
2. Install the Nudger/Feed Roll while aligning them as shown (Figure 5)

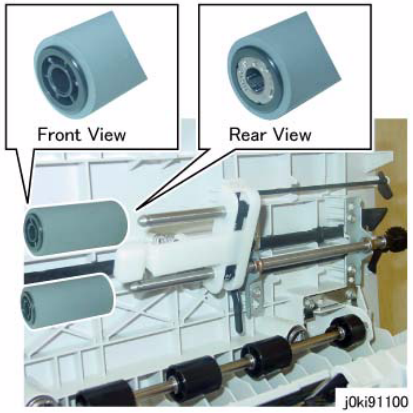

Figure 5 Align and Install the Nudger/Feed Roll

3. After a replacement, enter the Diagnostics Mode and use "Initialize HFSI Counter" to clear the HFSI counter.
   - Chain Link: 955-806

REP 5.19 Retard Roll

Parts List on PL 51.14

Removal

NOTE: *When turning the power OFF, turn OFF the Power Switch first and then the Main Power Switch.*

1. Press the **Job Status** button to check that there are no jobs in progress.
2. Switch off the power and disconnect the power cord.
3. Open the Top Cover.
4. Open the Retard Roll Cover. (Figure 1)
   a. Release the hook and open the Retard Roll Cover in the direction of the arrow.

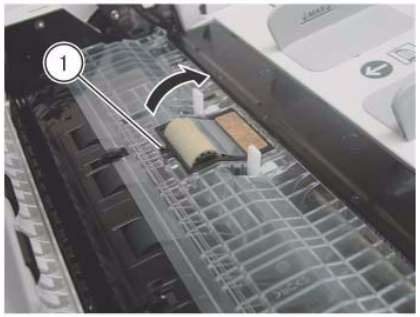

Figure 1 Open the Retard Roll cover

5. Remove the Retard Roll. (Figure 2)
   a. Remove the Retard Roll.

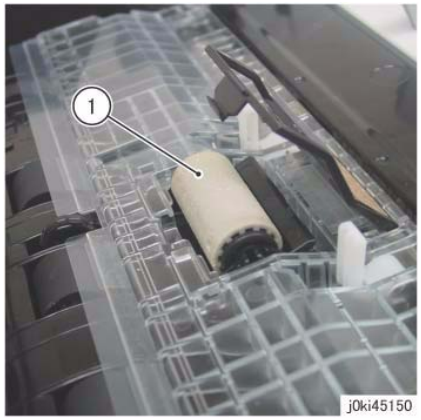

Figure 2 Remove the Retard Roll

Replacement

1. To install, carry out the removal steps in reverse order.
2. After a replacement, enter the Diagnostics Mode and use "Initialize HFSI Counter" to clear the HFSI counter.
   - Chain Link: 955-806

REP 6.2 Platen Glass

Parts List on PL 1.2

Removal

NOTE: *When turning the power OFF, turn OFF the Power Switch first and then the Main Power Switch.*

1. Press the **Job Status** button to check that there are no jobs in progress.
2. Switch off the power and disconnect the power cord.
3. Open the Platen Cover or DADF.
4. Remove the Platen Glass. (Figure 1)
   a. Remove the screws (x2).
   b. Remove the Right Side Plate.
   c. Remove the Platen Glass.

Figure 1 Remove the Platen Glass

Replacement

1. To install, carry out the removal steps in reverse order taking note of the following:

NOTE: *Push the Platen Glass in the direction of arrow A and the Right Side Plate in the direction of arrow B.*

(Figure 2)

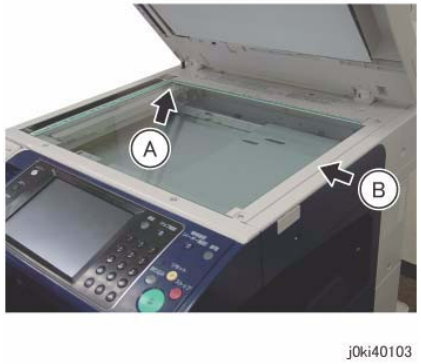

Figure 2 Push the Platen Glass (A) and (B)

REP 6.3 Control Panel

Parts List on PL 1.2

Removal

NOTE: *When turning the power OFF, turn OFF the Power Switch first and then the Main Power Switch.*

1. Press the **Job Status** button to check that there are no jobs in progress.
2. Switch off the power and disconnect the power cord.
3. Open the Platen Cover or DADF.
4. Open the Front Cover.
5. Remove the Front Left Cover. (Figure 1)
   a. Remove the screw.
   b. Remove the Front Left Cover in the direction of the arrow.

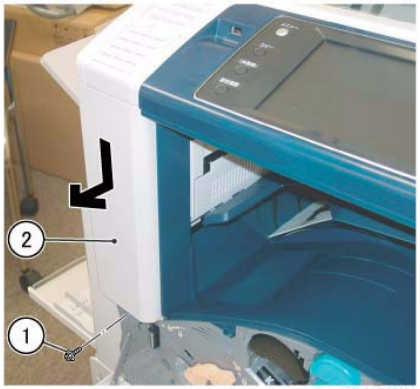

j0ki91083

Figure 1 Remove the Front Left Cover

6. Remove the screws that secure the Control Panel. (Figure 2)
   a. Remove the Stylus Pen.
   b. Remove the screws (x2).

j0ki40104

Figure 2 Remove the screws

7. Remove the screws that secure the Control Panel. (Figure 3)
   a. Remove the screws (x2).

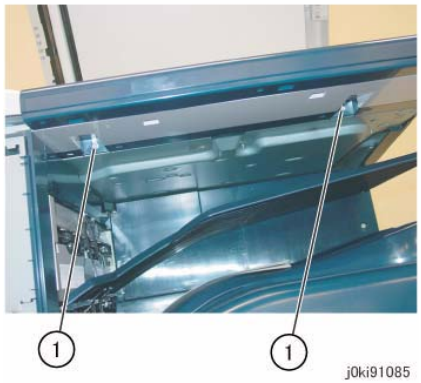

j0ki91085

Figure 3 Remove the screws

8. Remove the Control Panel. (Figure 4)
   a. Hold the Control Panel and slide it slowly to the front.
   b. Release the UI Cable from the hooks (x2).
   c. Release the hook at the bottom of the Connector Housing and disconnect the connector.
   d. Release the USB Cable from the clamp.
   e. Disconnect the connector of the USB Cable at the inner side.

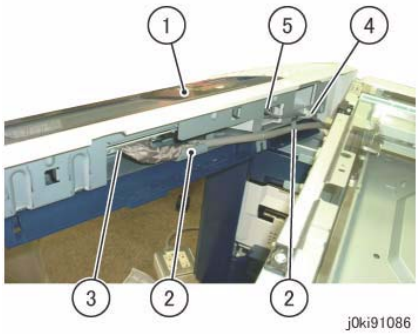

Figure 4 Remove the Control Panel

Replacement

1. To install, carry out the removal steps in reverse order.
2. Align the cable tie of the USB Cable to the right side of the clamp. (Figure 5)

Figure 5 Align the cable

3. Push in the excess length of the USB Cable into the opening. (Figure 6)

Figure 6 Push in the excess length of USB Cable

4. When attaching the UI Cable to the hook, make it so that the coated end of the UI Cable is positioned at the hook. (Figure 7)

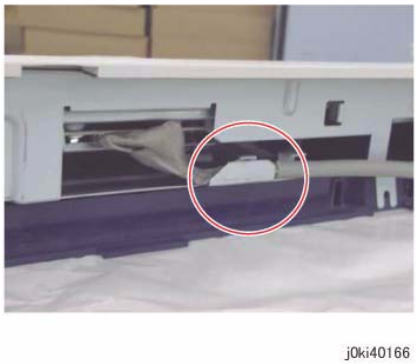

Figure 7 Position the coated end of the UI Cable at the hook

REP 6.4 USB Cable

Parts List on PL 1.2

Replacement

NOTE: *When turning the power OFF, turn OFF the Power Switch first and then the Main Power Switch.*

1. Press the **Job Status** button to check that there are no jobs in progress.
2. Switch off the power and disconnect the power cord.
3. When replacing the USB Cable, store the excess length in between the clamps (x2) as shown in the figure. (Figure 1)

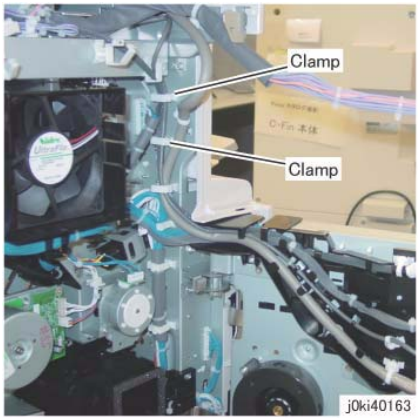

Figure 1 Store the excess USB Cable in between the clamps

REP 6.5 Console Assembly

Parts List on PL 1.3

Removal

NOTE: *When turning the power OFF, turn OFF the Power Switch first and then the Main Power Switch.*

Reference: Cleaning the Touch Panel

- When cleaning the Touch Panel, use soft cloth with mild detergent or alcohol and wipe gently.

1. Press the **Job Status** button to check that there are no jobs in progress.
2. Switch off the power and disconnect the power cord.
3. Open the Platen Cover or DADF.
4. Open the Front Cover.
5. Remove the Front Left Cover. (Figure 1)
   a. Remove the screw.
   b. Remove the Front Left Cover in the direction of the arrow.

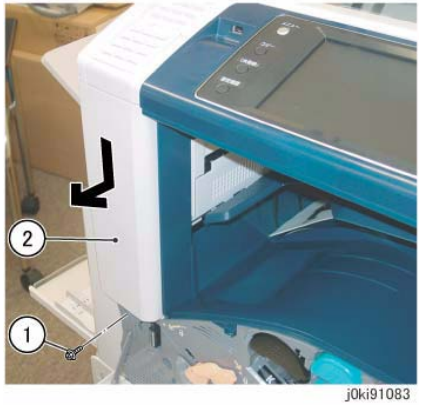

Figure 1 Remove the Front Left Cover

6. Remove the Stylus Pen. (Figure 2)
   a. Remove the Stylus Pen.

Figure 2 Remove the Stylus Pen

7. Remove the One Touch Panel. (Figure 3)
   a. Release the hooks (x2).
   b. Remove the One Touch Panel.
   c. Move the Block of the Connector Housing in the direction of the arrow.
   d. Remove the Flexible Flat Cable.

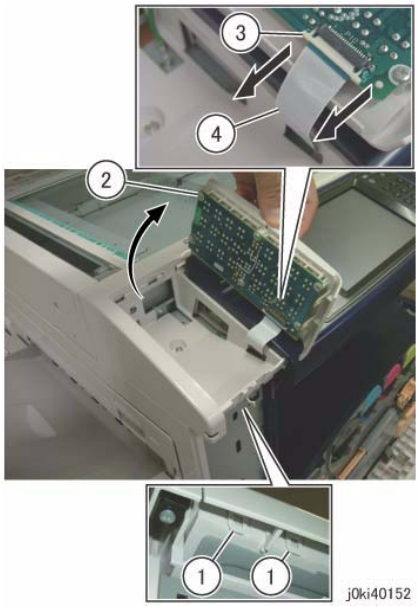

Figure 3 Remove the One Touch Panel

8. Release the hooks of the Overlay Cover. (Figure 4)
   a. Release the hooks (x3).

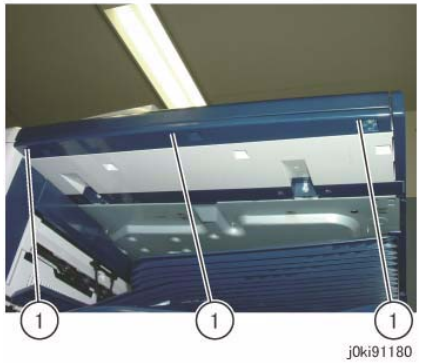

Figure 4 Release the hooks

9. Remove the Overlay Cover. (Figure 5)
   a. Remove the Overlay Cover in the direction of the arrow.

Figure 5 Remove the Overlay Cover

10. Remove the Overlay Cover. (Figure 6)
    a. Release the hooks (x3) and remove the Overlay Cover in the direction of the arrow.

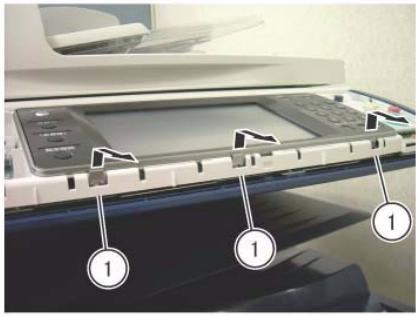

Figure 6 Remove the Overlay Cover

11. Remove the screws that secure the Console Assembly. (Figure 7)
    a. Remove the Tapping Screw.
    b. Remove the screws (x2).

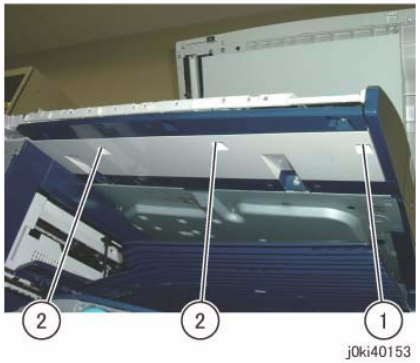

Figure 7 Remove the screws

12. Remove the screws that secure the Console Assembly. (Figure 8)
    a. Remove the Tapping Screws (x2).
    b. Remove the screw.

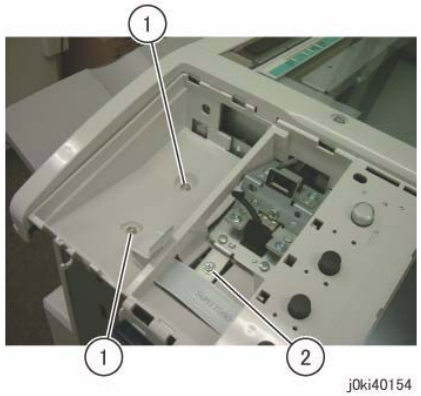

Figure 8 Remove the screws

13. Move the Console Assembly in the direction of the arrow. (Figure 9)
    a. Move the Console Assembly in the direction of the arrow.

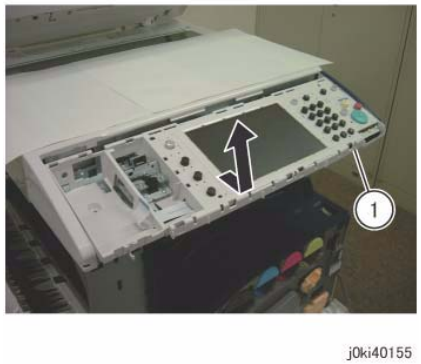

Figure 9 Moving the Console Assembly in the direction of the arrow

14. Remove the UI Cable from the hook. (Figure 10)
    a. Remove the UI Cable from the hook.

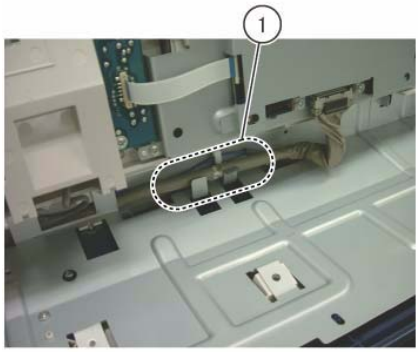

j0ki40156

Figure 10 Remove the UI Cable from the hook

15. Turn the Console Assembly upside down and place it gently on the Platen Glass.
16. Disconnect the connector of the Console Assembly. (Figure 11)
    a. Release the hook and disconnect the connector.
    b. Disconnect the connector of the USB Cable.

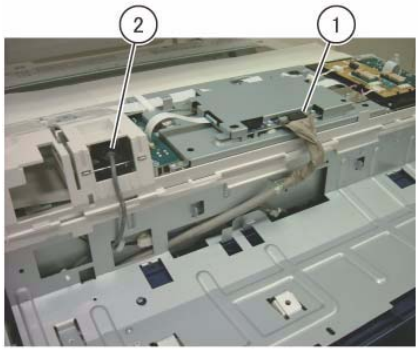

j0ki40157

Figure 11 Disconnect the connectors

Replacement

1. To install, carry out the removal steps in reverse order.
2. When attaching the UI Cable to the hook, make it so that the coated end of the UI Cable is positioned at the hook as shown in the figure. (Figure 12)
   (A) Coated end of UI Cable

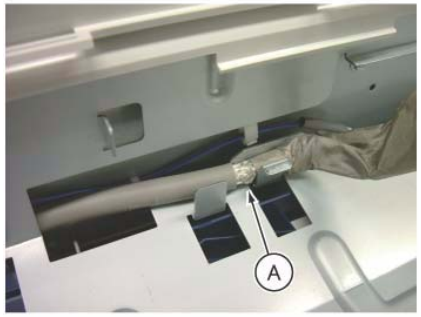

j0ki40158

Figure 12 Position the coated end of the UI Cable (A)

3. Store the excess length of the USB Cable as shown in (A) in the figure. (Figure 13)

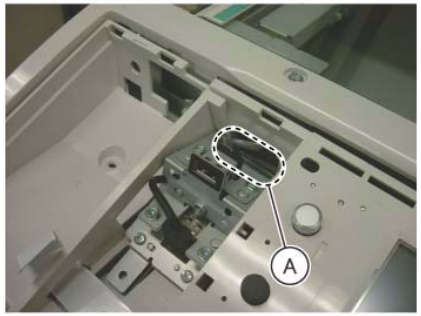

j0ki40159

Figure 13 Store the excess length of USB Cable

REP 6.6 CCD Lens Assembly

Parts List on PL 1.5

Removal

NOTE: *When turning the power OFF, turn OFF the Power Switch first and then the Main Power Switch.*

NOTE: *Light axis correction using UI Diagnostics is required after replacing the parts. After replacement, always check the light axis and perform the light axis correction adjustment where necessary. (The correction steps are described in this procedure.)*

NOTE: *Because the removal procedure for 7525/30/35 and 7545/56 are the same (they differ only by the shape of their CCD Lens Assembly), only the shape for 7545/56 will be described here.*

1. Press the **Job Status** button to check that there are no jobs in progress.
2. Switch off the power and disconnect the power cord.
3. Remove the following parts:
   - Platen Glass (REP 6.2)
   - Lens Cover (PL 1.4)
4. Move the APS Sensor. (Figure 1)
   a. Remove the screw (round).
   b. Release the harness from the clamp.
   c. Move the APS Sensor.

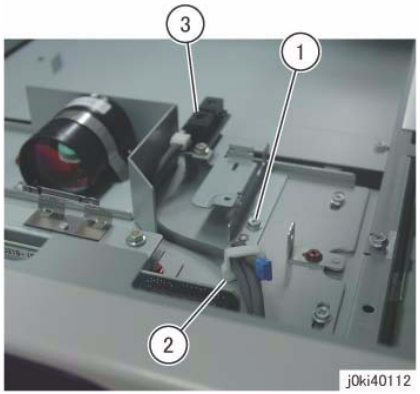

Figure 1 Move the APS Sensor

5. Disconnect the CCD Flexible Print Cable. (Figure 2)
   a. Release the hook and disconnect the connector.

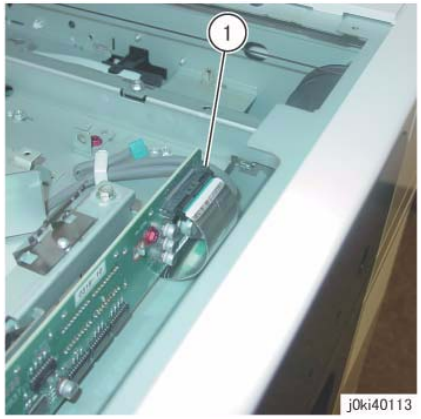

Figure 2 Disconnect the CCD Flexible Print Cable

6. Replace the CCD Lens Assembly. (Figure 3)

   NOTE: *When removing the CCD Lens Assembly, never remove the screws (x2) of the jig pin.*

   a. Remove the screws (x4).
   b. Replace the CCD Lens Assembly.
   c. Secure the CCD Lens Assembly by using the screws (x4).

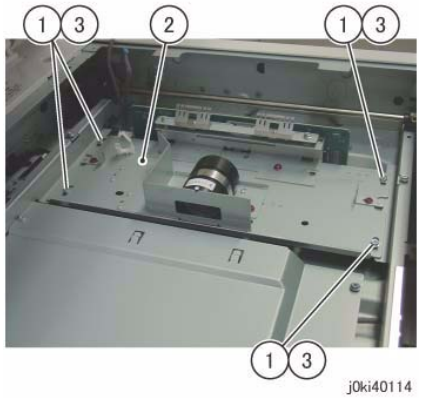

Figure 3 Replace the CCD Lens Assembly

7. Connect the CCD Flexible Print Cable.
8. Install the APS Sensor and Lens Cover.
9. Install the Platen Glass. (No need to install the guide for holding the glass.)
10. Make a copy onto A3 size paper using the Test Chart, and check both Lead and Tail sides.

11. Reinstall the removed parts if no problems are found.

    If any problems are found in images (especially alignment), go to Step 10.

    NOTE: *In the following steps, it is best to work in a condition in which outside light is minimized. If the servicing site is located directly below the fluorescent light, perform the servicing with the Platen (or DADF) somewhat closed to shut out the outside light.*

12. Enter UI Diagnostics.
13. Enter IIT Calibration (White Reference Adjustment, CCD Calibration, Optical Axis Correction).
14. Select [Optical Axis Correction].
15. Follow the instructions shown on the screen. Open the Platen and press the [Start] button.

    The Lamp Carriage moves and the lamp irradiates.
16. Check the following items on the UI screen.

Table 1 Optical Axis Correction

Optical Axis Correction	
Optical Axis Correction Judgment (Result)	NG
Front Nut Correction Angle -: Left rotation	-90
Rear Nut Correction Angle +: Right rotation	-555

Optical Axis Correction Judgment (Result): Displays OK/NG. If OK appears, the operation is complete. If NG appears, correction is needed. Front/Rear Nut Correction Angle: Shows a combination of ± with a numeral.

- Front Nut refers to the nuts at the front of the CCD Lens Assembly.
- Rear Nut refers to the nuts at the rear of the CCD Lens Assembly.
- +: Refers to right rotation.
- -: Refers to left rotation.
- Numeral: Refers to the angle. (Unit: degrees)

  Using the content of the above table as an example:

  The Front Nut must be rotated 90 degrees. to the left.

  The Rear Nut must be rotated 555 degrees. to the left.
- If the value is an abnormal number such as 990, clean the Platen Glass and the mirror, etc. and start again. This may be due to the light path being blocked.

17. Carry out the steps above using the information on the UI screen.
18. Rotate the nut. (Figure 4)

    NOTE: *As it is difficult to control the rotation amount, it is recommended to draw a line on a strip of paper and tape it to the tip of the Box Driver to make a mark as shown in the figure below.(Figure 4)*

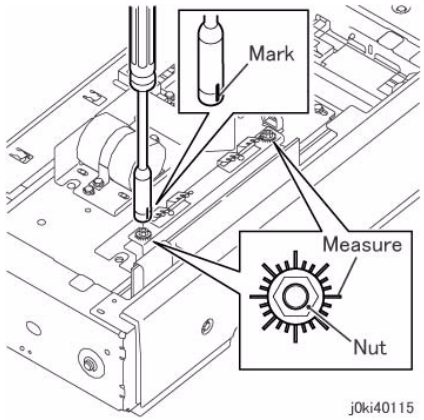

Figure 4 Rotate the nut

19. After the adjustment, enter IIT Calibration (White Reference Adjustment, CCD Calibration, Optical Axis Correction) and perform the Optical Axis Correction again. [Refer to ADJ 6.6]
20. Repeat Steps 10 to 17 until the judgment displays "OK".

    NOTE: *If the result is OK, the operation can be completed even if the number of rotations is still displayed.*

21. Reinstall all removed parts.

REP 6.7 Front/Rear Carriage Cable

Parts List on PL 1.6

Removal

NOTE: *When turning the power OFF, turn OFF the Power Switch first and then the Main Power Switch.*

WARNING

Use extreme care when working with the following components. Some of the components may have very sharp edges and could cause serious personal injury.

DANGER: Manipuler les éléments suivants avec précaution: ils peut comporter des rebords tranchants qui peuvent causer de graves blessures.

AVVERTENZA: Maneggiare i seguenti elementi con la massima precauzione: essi possono avere dei bordi molto affilati che possono causare serie ferite.

VORSICHT: Bei der Verwendung nachfolgender Komponenten ist äußerste Vorsicht geboten. Einige dieser Komponenten können u.U. scharfe Kanten vorweisen und somit zu schweren Schnittverletzungen führen.

AVISO: Manipule los componentes siguientes con mucha precaución. Éstos pueden tener bordes filosos y ocasionar daños personales graves.

NOTE: *The front and rear coatings of the Carriage Cable are different.*

Front: Silver

Rear: Black

NOTE: *Only the replacement procedures for the Rear Carriage Cable is described here. The replacement procedures for the Front Carriage Cable is the same as for the Rear Carriage Cable.*

NOTE: *The Carriage Cables must be replaced one by one. Never remove both front and rear cables at the same time.*

1. Press the **Job Status** button to check that there are no jobs in progress.
2. Switch off the power and disconnect the power cord.
3. Open the DADF or the Platen Cover.
4. Remove the following parts:
   - Platen Glass (REP 6.2)
   - Control Panel (REP 6.3)
   - IIT Left Cover (PL 1.1)
5. Unfasten the Full Rate Carriage from the Carriage Cable. (Figure 1)
   a. Move the Full Rate Carriage to the notch on the Frame.
   b. Remove the screw.

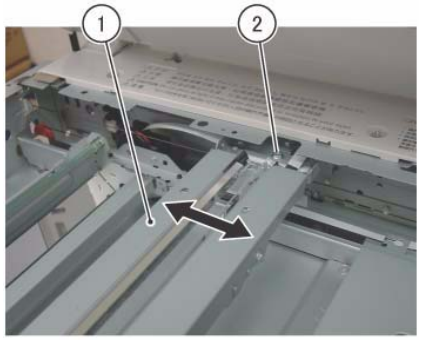

Figure 1 Unfasten the Full Rate Carriage

6. Remove the Carriage Cable. (Figure 2)
   a. Remove the spring from the Frame.
   b. Detach the cable from the spring.

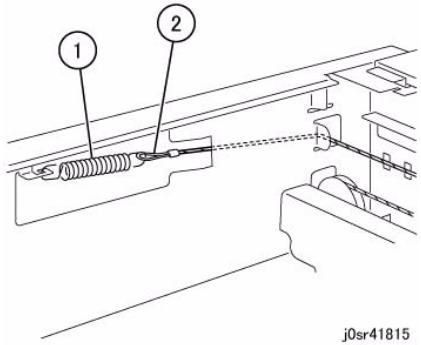

Figure 2 Remove the Carriage Cable

7. Remove the Carriage Cable. (Figure 3)
   a. Pull out the ball from the notch of the Frame and remove the Carriage Cable.

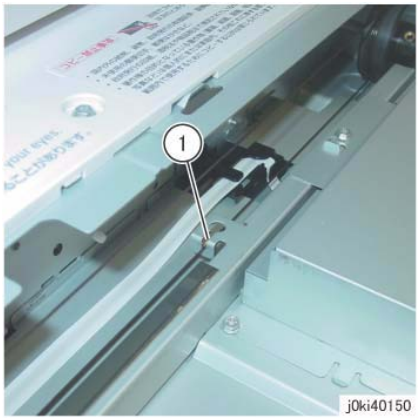

Figure 3 Remove the Carriage Cable

Replacement

1. Insert the ball of the Carriage Cable into the groove of the Pulley. (Figure 4)

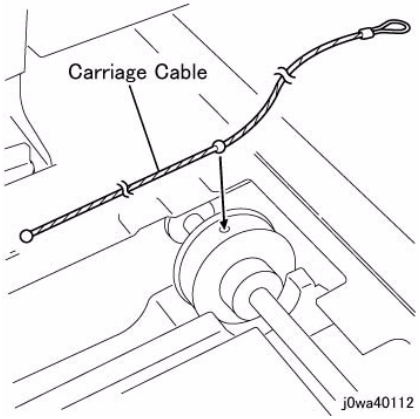

Figure 4 Insert the ball of the Carriage Cable into the groove

2. Wind the Carriage Cable at the spring end around the Pulley for 2 rounds. (Figure 5)
   a. Wind the cable 2 rounds.
   b. Fix the cable at the spring end on the Frame with tape.

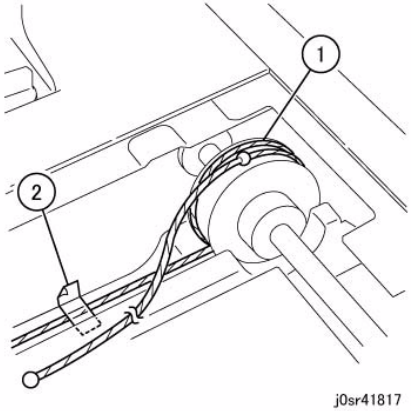

Figure 5 Wind the Carriage Cable around the Pulley for 2 rounds

3. Wind the Carriage Cable at the ball end around the Pulley for 1.5 rounds. (Figure 6)
   a. Wind the cable 1.5 rounds.
   b. Fix the cable wound on the Pulley with tape to prevent it from getting loose.

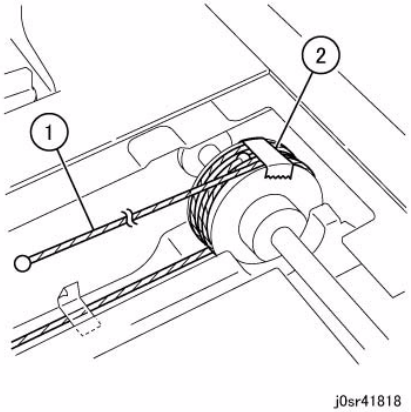

Figure 6 Wind the Carriage Cable around the Pulley 1.5 rounds

4. The figure below shows the number of rounds made by Carriage Cable at the front and rear. (Figure 7)

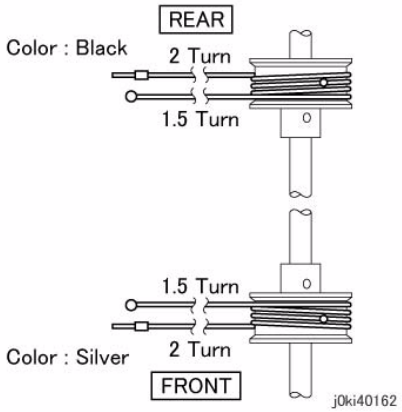

Figure 7 Rounds made by the Carriage Cable

5. Install the ball end of the Carriage Cable. (Figure 8)
   a. Hang the cable on the larger Pulley of the Half Rate Carriage.
   b. Hang the ball on the notch of the Frame.

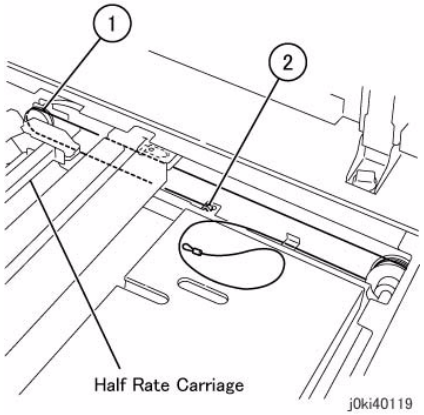

Figure 8 Install the ball end of the Carriage Cable

6. Install the spring end of the Carriage Cable. (Figure 9)
   a. Peel off the tape that secures the cable.
   b. Hang the cable on the Pulley.
   c. Hang it on the Pulley at the rear of Half Rate Carriage.
   d. Hang the spring on the Cable and attach it to the Frame.

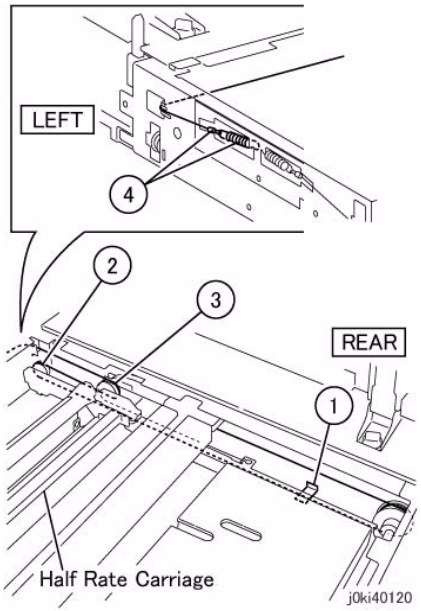

Figure 9 Install the spring end of the Carriage Cable

7. Affix the cable to the Full Rate Carriage. (Figure 10)
   a. Peel off the tape.
   b. Move the Full Rate Carriage to the notch on the Frame.
   c. Affix the cable to the Full Rate Carriage.

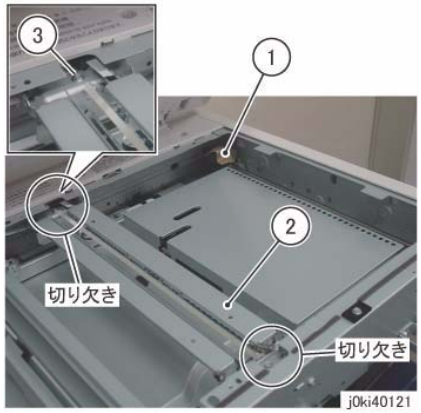

Figure 10 Affix the cable

8. Adjust the position of Full Rate/Half Rate Carriages. (ADJ 6.1)
9. Restore the machine to its original state.

REP 6.8 Carriage Motor

Parts List on PL 1.6

Removal

NOTE: *When turning the power OFF, turn OFF the Power Switch first and then the Main Power Switch.*

1. Press the **Job Status** button to check that there are no jobs in progress.
2. Switch off the power and disconnect the power cord.
3. Remove the following parts:
   - Platen Cover or DADF Assembly (REP 5.1)
   - Filter Cover (PL 19.3)
   - Rear Upper Cover (PL 19.3)
   - IIT Right Cover (PL 1.1)
   - IIT Rear Cover (PL 1.1)
   - IIT Top Cover (PL 1.1)
4. Remove the Carriage Motor. (Figure 1)
   a. Disconnect the connector.
   b. Remove the cable band.
   c. Remove the spring.
   d. Remove the screws (x3).
   e. Remove the Carriage Motor.

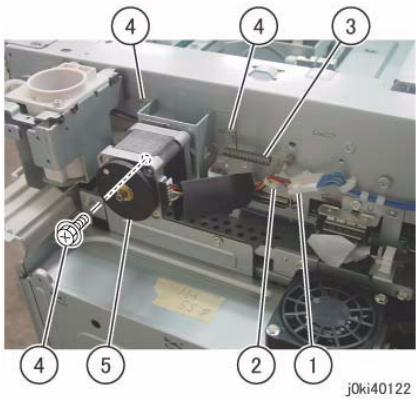

Figure 1 Remove the Carriage Motor

Replacement

1. To install, carry out the removal steps in reverse order.
2. Install the Belt to the Pulley of the Carriage Motor. (Figure 2)

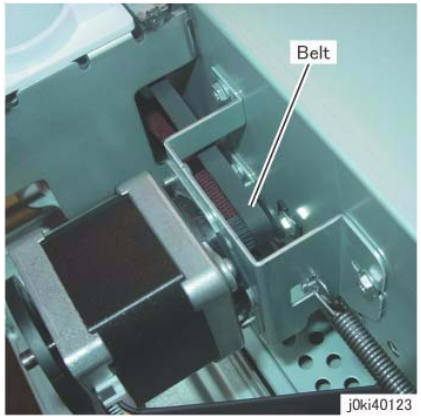

Figure 2 Install the Belt

3. Install the Carriage Motor:
   a. Attach the idler spring.
   b. Move the carriage to fit the Belt.
   c. Secure the Carriage Motor to the Main Unit with the mounting screws.
4. After installing the Carriage Motor, move the Full Rate Carriage back and forth and check that it is moving smoothly.

REP 6.9 LED Lamp PWB

Parts List on PL 1.7

Removal

NOTE: *When turning the power OFF, turn OFF the Power Switch first and then the Main Power Switch.*

NOTE: *Do not touch the chip on the LED Lamp PWB.*

1. Press the **Job Status** button to check that there are no jobs in progress.
2. Switch off the power and disconnect the power cord.
3. Open the Platen Cover or DADF.
4. Remove the Platen Glass. (REP 6.2)
5. Move the Full Rate Carriage to the notch on the Frame.
6. Disconnect the connector. (Figure 1)
   a. Move the Block of the Connector Housing in the direction of the arrow.
   b. Remove the Flexible Flat Cable.

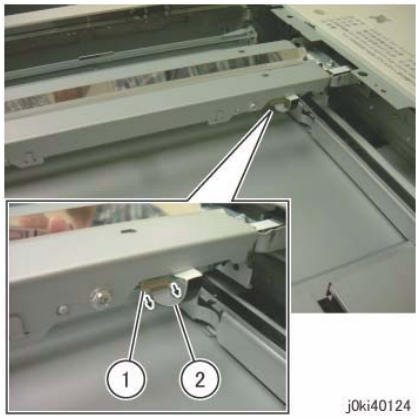

Figure 1 Disconnect the connector

7. Remove the LED Lamp. (Figure 2)
   a. Remove the screws (x2).
   b. Remove the LED Lamp.

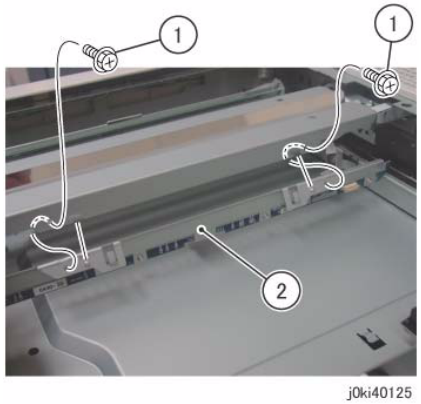

Figure 2 Remove the LED Lamp

8. Remove the LED Lamp PWB. (Figure 3)
   a. Remove the screws (x4).
   b. Remove the LED Lamp PWB.
   (A) Take note so as not to touch the LED chip.

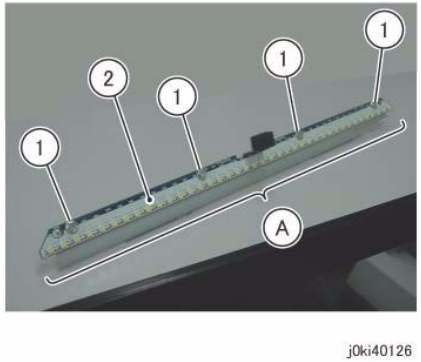

Figure 3 Remove the LED Lamp PWB

Replacement

1. To install, carry out the removal steps in reverse order.
2. When installing the LED Lamp PWB, loosely affix screw A and tighten the screws in order of 1 to 4. (Figure 4)

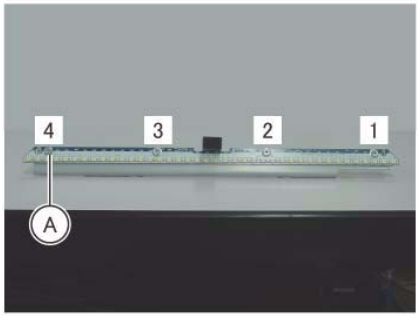

j0ki40127

Figure 4 Install the LED Lamp PWB

3. When installing the LED Lamp, insert the rear side of the LED Lamp PWB into the square hole of the Full Rate Carriage. (Figure 5)

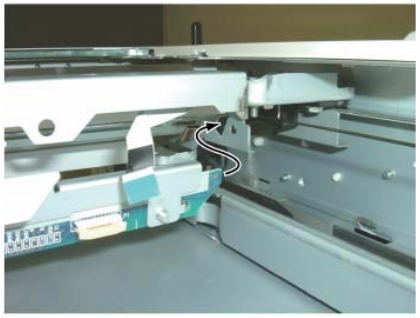

j0ki40128

Figure 5 Install the LED Lamp

4. When installing the LED Lamp, affix the Full Rate Carriage by using the hook of the LED Lamp. (Figure 6)

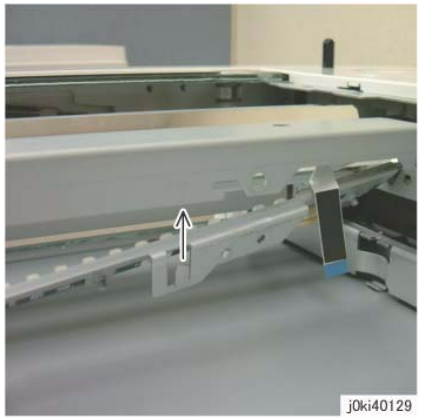

j0ki40129

Figure 6 Use the hook of the LED Lamp

5. After a replacement, enter the Diagnostics Mode and use "Initialize HFSI Counter" to clear the HFSI counter.
   - "Chain Link: 956-803"
   - "Chain Link: 956-804"

REP 6.10 LED Lamp Wire Harness

Parts List on PL 1.7

Removal

NOTE: *When turning the power OFF, turn OFF the Power Switch first and then the Main Power Switch.*

1. Press the **Job Status** button to check that there are no jobs in progress.
2. Switch off the power and disconnect the power cord.
3. Open the Platen Cover or DADF.
4. Remove the following parts:
   - CCD Lens Assembly (REP 6.6)
   - LED Lamp (REP 6.9)
5. Remove the PWB Cover. (Figure 1)
   a. Remove the screw (Blue, x1).
   b. Remove the screws (Round: x2).
   c. Remove the PWB Cover in the direction of the arrow.

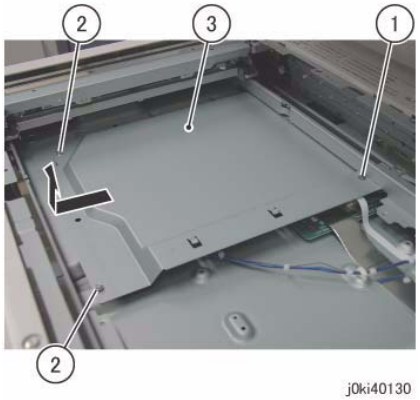

Figure 1 Remove the PWB Cover

6. Disconnect the LED Lamp Wire Harness. (Figure 2)
   a. Move the Block of the Connector Housing in the direction of the arrow.
   b. Disconnect the LED Lamp Wire Harness.
   c. Peel off the LED Lamp Wire Harness from the adhesive tape section.

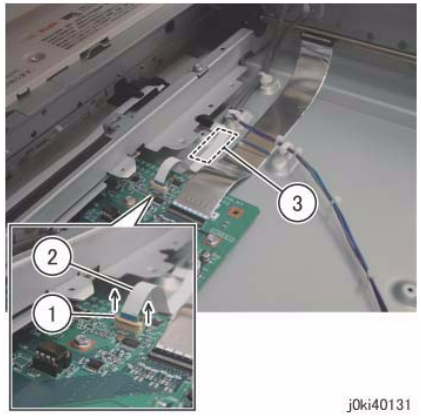

Figure 2 Disconnect the LED Lamp Wire Harness

7. Remove the LED Lamp Wire Harness from the Harness Holder. (Figure 3)
   a. Remove the LED Lamp Wire Harness from the Harness Holder.

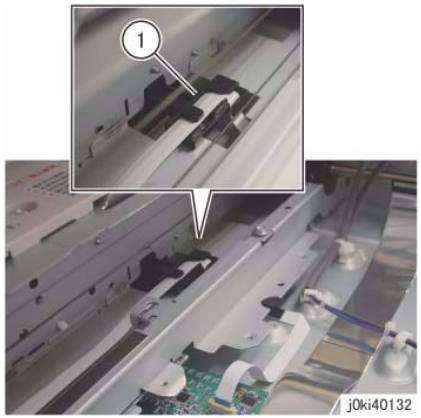

Figure 3 Remove the LED Lamp Wire Harness

8. Remove the Full Rate Carriage. (Figure 4)
   a. Remove the screws (x2).
   b. Move the Full Rate Carriage in the direction of the arrow and remove it.

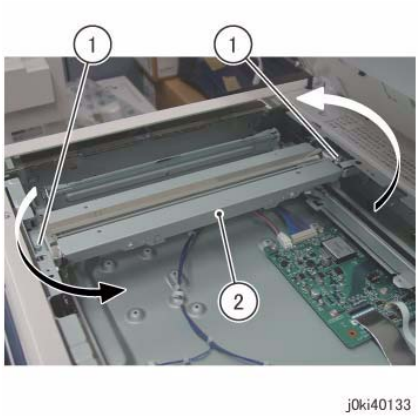

Figure 4 Remove the Full Rate Carriage

9. Turn the Full Rate Carriage upside down.
10. Remove the guide. (Figure 5)
    a. Remove the screw.
    b. Remove the guide.

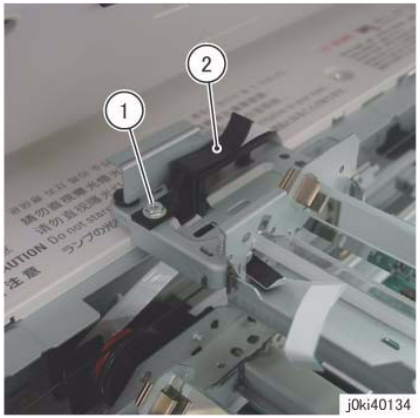

Figure 5 Remove the Guide

11. Remove the LED Lamp Wire Harness from the Full Rate Carriage. (Figure 6)
    a. Remove the LED Lamp Wire Harness.

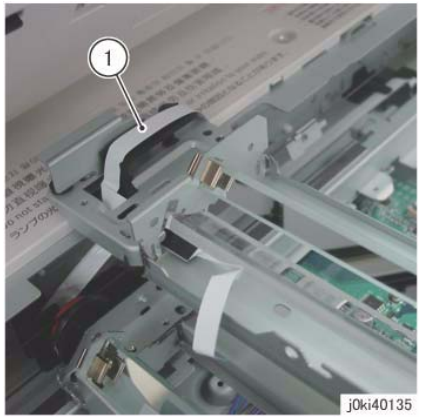

Figure 6 Remove the LED Lamp Wire Harness

Replacement

1. To install, carry out the removal steps in reverse order.
2. The LED Lamp Wire Harness is to be installed to the Harness Guide of the Half Rate Carriage. (Figure 7)
   (A) Harness Guide

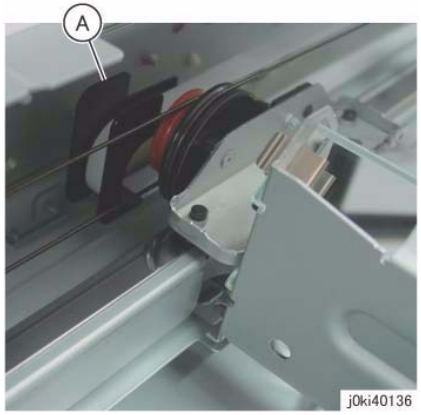

Figure 7 Install the LED Lamp Wire Harness

3. When securing the LED Lamp Wire Harness to the Base Frame using adhesive tape, align it to the mark as shown in the figure to paste it. (Figure 8)

Figure 8 Secure the LED Lamp Wire Harness

4. When installing the PWB Cover, attach the hooks (x4). (Figure 9)

Figure 9 Install the PWB Cover

5. Adjust the position of Full Rate/Half Rate Carriages. (ADJ 6.1)

REP 6.11 Light Guide

Parts List on PL 1.7

Removal

NOTE: *When turning the power OFF, turn OFF the Power Switch first and then the Main Power Switch.*

NOTE: *Do not touch the Light Guide using bare hands.*

1. Press the **Job Status** button to check that there are no jobs in progress.
2. Switch off the power and disconnect the power cord.
3. Remove the DADF. (REP 5.1)
4. Remove the Platen Glass. (REP 6.2)
5. Move the Full Rate Carriage to the notch on the Frame.
6. Remove the Light Guide. (Figure 1)
   a. Remove the screw.
   b. Remove the clip.
   c. Remove the screw.
   d. Remove the clip.
   e. Remove the Light Guide.
   (A) Take note so as to not damage the Lamp Wire Harness.

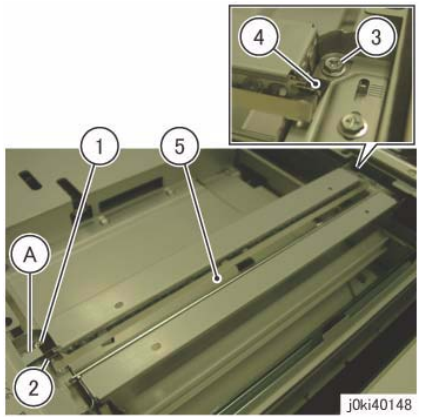

Figure 1 Remove the Light Guide

Replacement

1. To install, carry out the removal steps in reverse order.
2. When installing the Light Guide, insert the boss of the Light guide into the positioning hole of the Full Rate Carriage. (Figure 2)

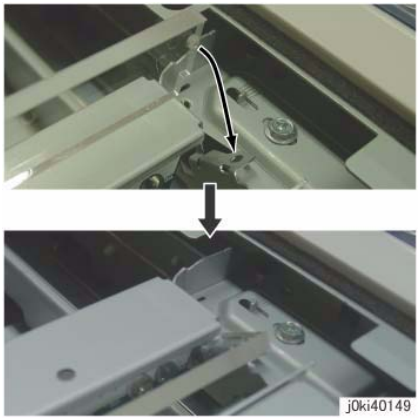

Figure 2 Install the Light Guide

REP 6.12 IIT PWB

Parts List on PL 1.8

Removal

CAUTION

Serial number data is stored at three locations:

- *MCU NVM PWB*
- *SBC NVM PWB*
- *IIT/IPS PWB.*

If these boards are replaced one-at-a-time, the machine will automatically synchronize the data on the new PWB to match the other two. You must install the new PWB, switch on the power, wait for the numbers to synchronize, then switch off the power before replacing any other PWB.:

If the removal/replacement procedure is not followed correctly, or if data corruption causes one of the following faults:

- *16-801.19*
- *22-352*

then you must perform dC132 to restore serial numbers/billing data.

CAUTION

Static electricity can damage electrical parts. Always use an Electrostatic Discharge Kit during servicing. If an ESD kit is not available, touch metallic parts on the machine frame prior to servicing to discharge the static electricity.

NOTE: *When turning the power OFF, turn OFF the Power Switch first and then the Main Power Switch.*

1. Press the **Job Status** button to check that there are no jobs in progress.
2. Switch off the power and disconnect the power cord.
3. Remove the Filter Cover and Rear Upper Cover. (PL 19.3)
4. Remove the IIT Rear Cover. (Figure 1)
   a. Loosen the screws (x2) and disconnect the connector.
   b. Remove the screws (x2).
   c. Remove the IIT Rear Cover.

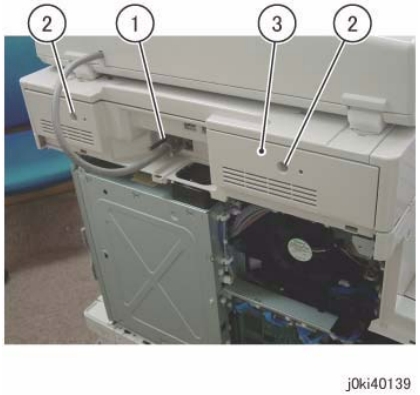

Figure 1 Remove the IIT Rear Cover

5. Disconnect the connectors at the rear side that are connected to the IIT PWB. (Figure 2)
   a. Release the hook and disconnect the connector.
   b. Disconnect the connector.
   c. Remove the Lock Screws (x2).
   d. Remove the screw.

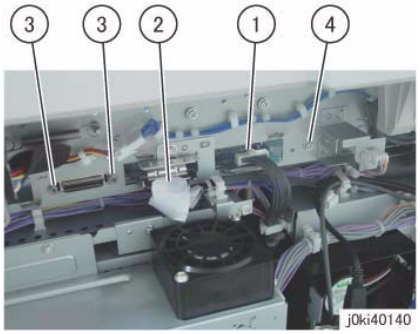

Figure 2 Disconnect the connectors

6. Open the Platen or the DADF.
7. Remove the Platen Glass. (REP 6.2)
8. Remove the Lens Cover. (PL 1.5)
9. Remove the PWB Cover. (Figure 3)
   a. Remove the screw (Blue, x1).
   b. Remove the screws (Round: x2).
   c. Remove the PWB Cover in the direction of the arrow.

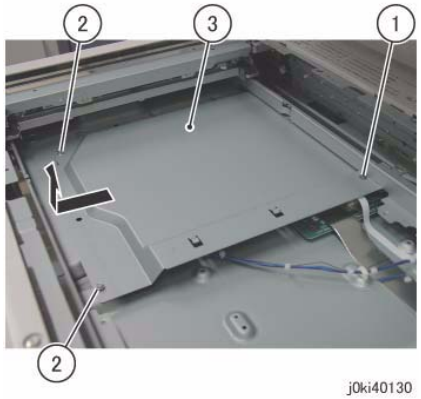

Figure 3 Remove the PWB Cover

10. Disconnect the connectors that are connected to the IIT PWB. (Figure 4)
    a. Move the Block of the Connector Housing in the direction of the arrow.
    b. Remove the Flexible Print Cable.
    c. Open the Plate of the Connector Housing in the direction of the arrow.
    d. Remove the Flexible Print Cable.
    e. Release the hook and disconnect the connector.
    f. Disconnect the connector.

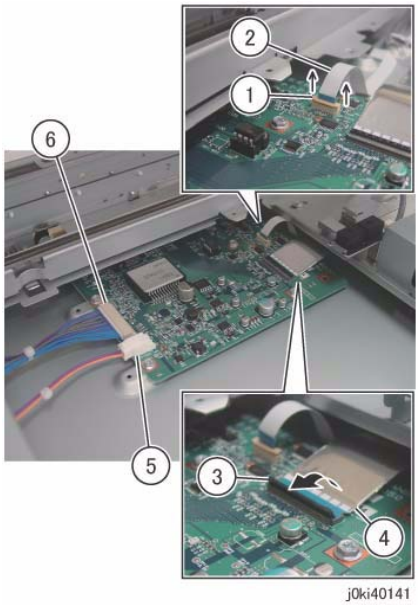

Figure 4 Disconnect the connectors

11. Remove the IIT PWB. (Figure 5)
    a. Remove the screws (x4).
    b. Remove the IIT PWB.

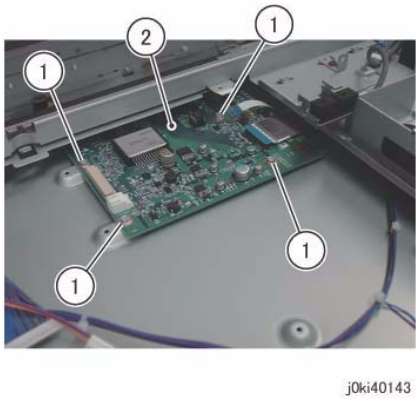

Figure 5 Remove the IIT PWB

Replacement

1. To install, carry out the removed steps in reverse order.
2. When the PWB is replaced, remove the EEP ROM from the old PWB and install it onto the new one. (Figure 6)

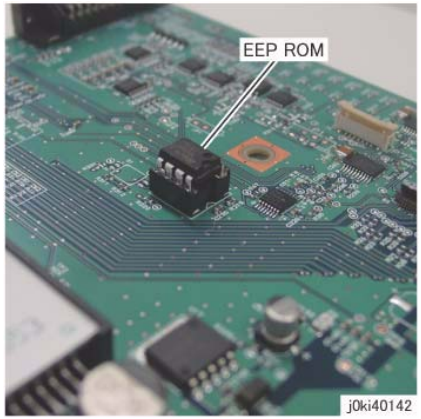

Figure 6 Remove and Replace the EEP ROM from the old PWB

3. When installing the PWB Cover, attach the hooks (x4). (Figure 7)

Figure 7 Install the PWB Cover

REP 6.13 USB Connector

Parts List on PL 1.4

Removal

NOTE: *When turning the power OFF, turn OFF the Power Switch first and then the Main Power Switch.*

1. Press the **Job Status** button to check that there are no jobs in progress.
2. Switch off the power and disconnect the power cord.
3. Release the hooks of the Overlay Cover. (Figure 1)
   a. Release the hooks (x3).

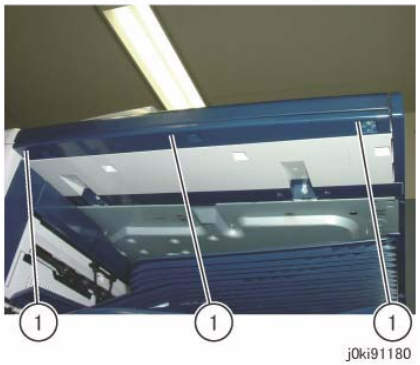

Figure 1 Release the hooks

4. Remove the Overlay Cover. (Figure 2)
   a. Remove the Overlay Cover in the direction of the arrow.

Figure 2 Remove the Overlay Cover

5. Remove the screws that secure the USB Connector. (Figure 3)
   a. Remove the screw.
   b. Remove the Tapping Screws (x2).

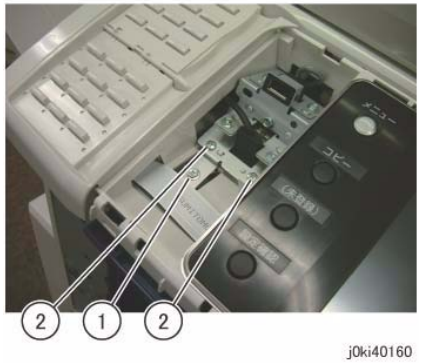

Figure 3 Remove the screws

6. Remove the USB Connector. (Figure 4)
   a. Shift the USB Connector.
   b. Disconnect the connector of the USB Cable.

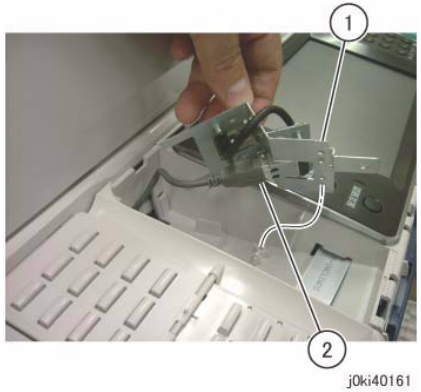

Figure 4 Remove the USB Connector

Replacement

1. To install, carry out the removal steps in reverse order.

REP 7.1 Tray 1 Feeder Assembly

Parts List on PL 9.3

Removal

NOTE: *When turning the power OFF, turn OFF the Power Switch first and then the Main Power Switch.*

1. Press the **Job Status** button to check that there are no jobs in progress.
2. Switch off the power and disconnect the power cord.
3. Remove the Registration Transport Assembly. (REP 7.24)
4. Pull out Tray 1 and remove the paper.
5. Remove Tray 1.
6. Remove the Chute Assembly from the Tray 1 Feeder Unit. (Figure 1)
   a. Remove the Stopper Screw.
   b. Remove the Chute Assembly in the direction of the arrow.

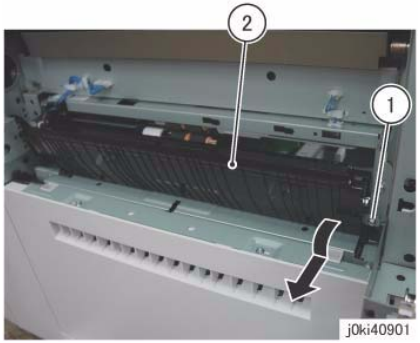

Figure 1 Remove the Chute Assembly

7. Disconnect the connector. (Figure 2)
   a. Release the Wire Harness from the clamps (x2).
   b. Disconnect the connector.
   c. Release the wire harness from the clamp.
   d. Disconnect the connector.

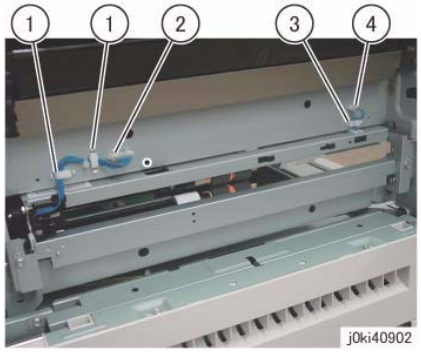

Figure 2 Disconnect the connector

8. Remove the Tray 1 Feeder Unit. (Figure 3)
   a. Remove the screws (x2).
   b. Remove the Tray 1 Feeder Unit.

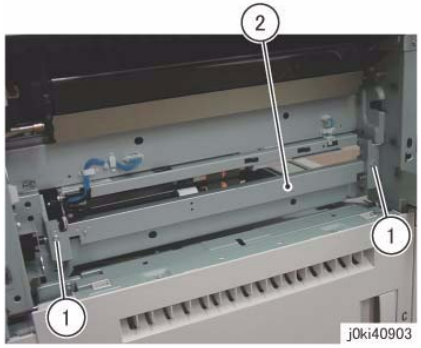

Figure 3 Remove Tray 1 Feeder

Replacement

1. To install, carry out the removal steps in reverse order.
2. After a replacement, enter the Diag. Mode and use "Initialize HFSI Counter" to clear the HFSI counter.
   - "Chain Link: 954-800"

REP 7.2 Tray 1 Feed/Retard/Nudger Roll

Parts List on PL 9.5

Removal

NOTE: *When turning the power OFF, turn OFF the Power Switch first and then the Main Power Switch.*

1. Press the **Job Status** button to check that there are no jobs in progress.
2. Switch off the power and disconnect the power cord.
3. Pull out Tray 1 and remove the paper.
4. Remove Tray 1.
5. Remove the Tray 1 Feed/Retard/Nudger Roll. (Figure 1)
   a. Slide the chute towards you.
   b. Remove the Tray 1 Feed/Retard/Nudger Roll.

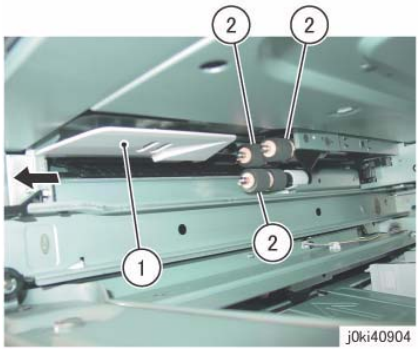

Figure 1 Remove the Tray 1 Feed/Retard/Nudger Rolls

Replacement

1. To install, carry out the removal steps in reverse order.
2. After a replacement, enter the Diag Mode and use "Initialize HFSI Counter" to clear the HFSI counter.
   - "Chain Link: 954-800"

REP 7.3 Tray 2 Feeder Assembly (3TM)

Parts List on PL 10.1

Removal

NOTE: *When turning the power OFF, turn OFF the Power Switch first and then the Main Power Switch.*

1. Press the **Job Status** button to check that there are no jobs in progress.
2. Switch off the power and disconnect the power cord.
3. Remove Tray 2.
4. Open the L/H Cover Unit.
5. Remove the Feed Out Chute. (Figure 1)
   a. Remove the Feed Out Chute.

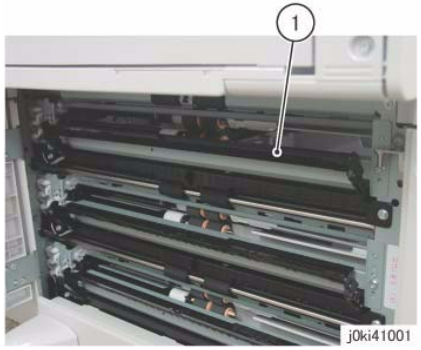

Figure 1 Remove the Feed Out Chute

6. Remove the Bracket Assembly. (Figure 2)
   a. Remove the screw.
   b. Remove the Bracket Assembly.

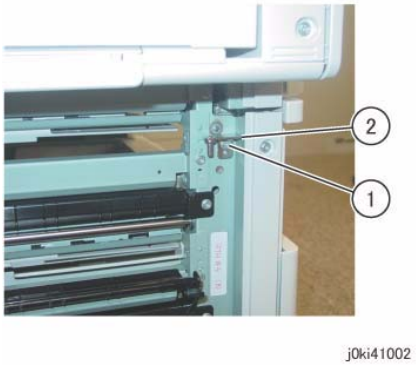

Figure 2 Remove the Bracket Assembly

7. Disconnect the connector. (Figure 3)
   a. Release the wire harness from the clamps (x3).
   b. Disconnect the connectors (x2).

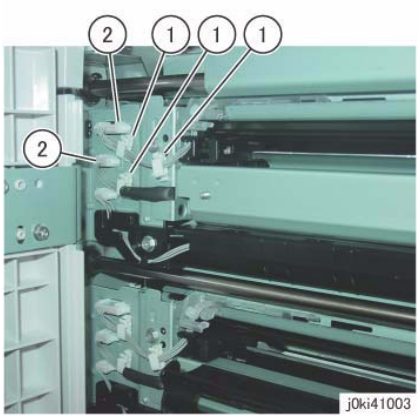

Figure 3 Disconnect the connectors

8. Remove the Tray 2 Feeder Assembly. (Figure 4)
   a. Remove the screws (x2).
   b. Remove Tray 2 Feeder Assembly.

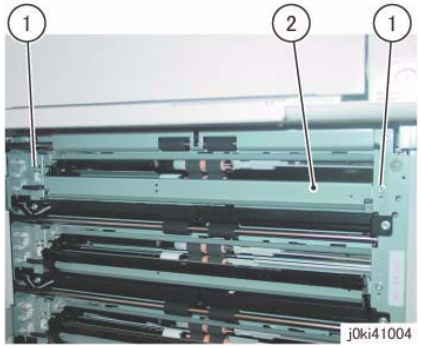

Figure 4 Remove the Tray 2 Feeder Assembly

Replacement

1. To install, carry out the removal steps in reverse order.
2. After a replacement, enter the Diag Mode and use "Initialize HFSI Counter" to clear the HFSI counter.
   - "Chain Link: 954-801"

REP 7.4 Tray 3 Feeder Assembly (3TM)

Parts List on PL 10.1

Removal

NOTE: *When turning the power OFF, turn OFF the Power Switch first and then the Main Power Switch.*

1. Press the **Job Status** button to check that there are no jobs in progress.
2. Switch off the power and disconnect the power cord.
3. Remove Tray 3.
4. Open the L/H Cover Unit.
5. Remove the Feed Out Chute. (Figure 1)
   a. Remove the Feed Out Chute.

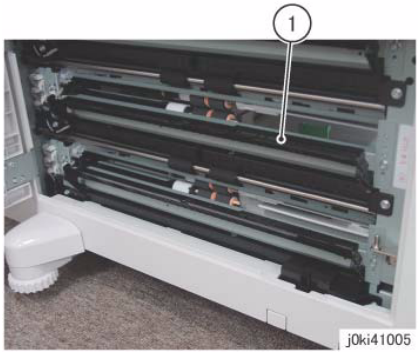

Figure 1 Remove the Feed Out Chute

6. Disconnect the connector. (Figure 2)
   a. Release the wire harness from the clamps (x3).
   b. Disconnect the connectors (x2).

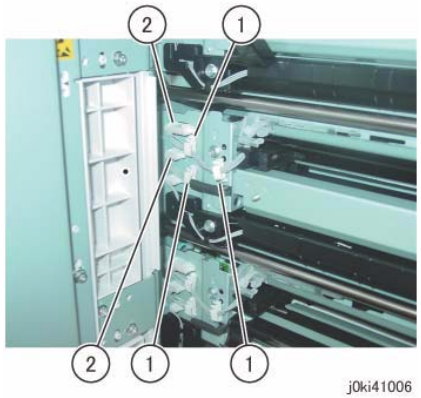

Figure 2 Disconnect the connectors

7. Remove the Tray 3 Feeder Assembly. (Figure 3)
   a. Remove the screws (x2).
   b. Remove Tray 3 Feeder Assembly.

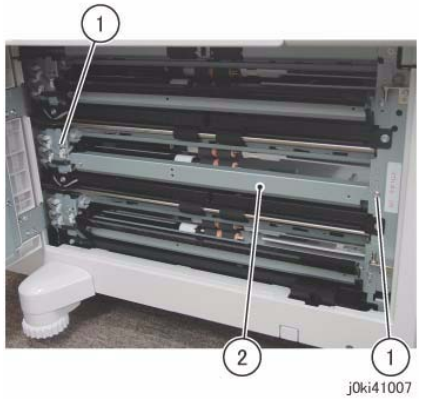

Figure 3 Remove the Tray 3 Feeder Assembly

Replacement

1. To install, carry out the removal steps in reverse order.
2. After a replacement, enter the Diag Mode and use "Initialize HFSI Counter" to clear the HFSI counter.
   - "Chain Link: 954-802"

REP 7.5Tray 4 Feeder Assembly (3TM)

Parts List on PL 10.1

Removal

NOTE: *When turning the power OFF, turn OFF the Power Switch first and then the Main Power Switch.*

1. Press the **Job Status** button to check that there are no jobs in progress.
2. Switch off the power and disconnect the power cord.
3. Remove Tray 4.
4. Open the L/H Cover Unit.
5. Remove the Feed Out Chute. (Figure 1)
   a. Remove the Feed Out Chute.

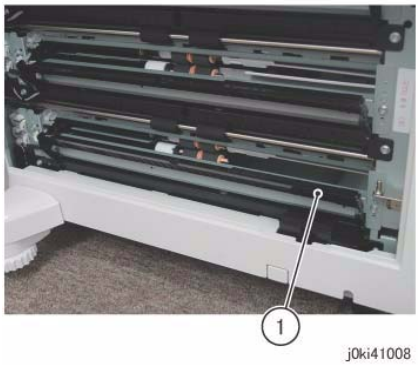

Figure 1 Remove the Feed Out Chute

6. Remove the Bracket Assembly. (Figure 2)
   a. Remove the screw.
   b. Remove the Bracket Assembly.

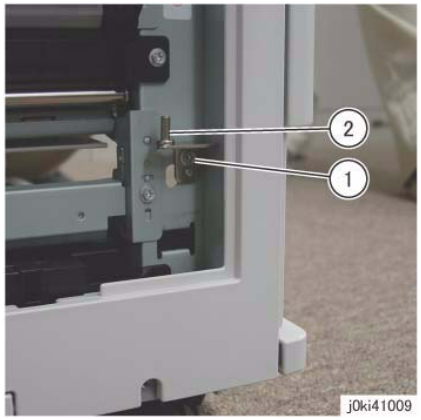

Figure 2 Remove the Bracket Assembly

7. Disconnect the connector. (Figure 3)
   a. Release the wire harness from the clamps (x3).
   b. Disconnect the connectors (x2).

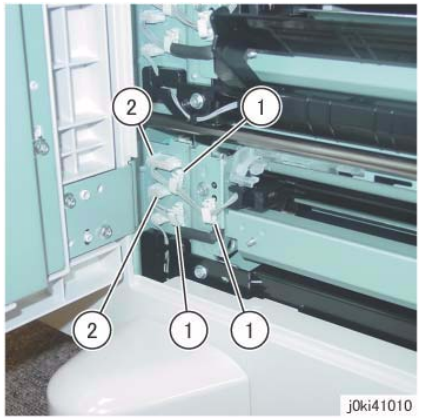

Figure 3 Disconnect the connectors

8. Remove the Tray 4 Feeder Assembly. (Figure 4)
   a. Remove the screws (x2).
   b. Remove Tray 4 Feeder Assembly.

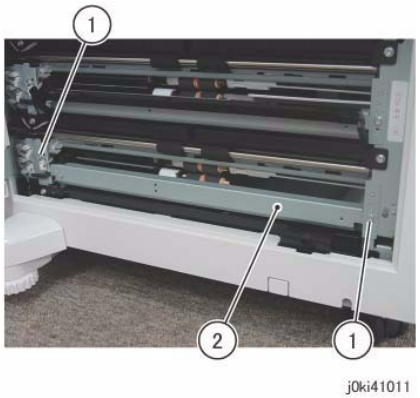

Figure 4 Remove the Tray 4 Feeder Assembly

Replacement

1. To install, carry out the removal steps in reverse order.
2. After a replacement, enter the Diag Mode and use "Initialize HFSI Counter" to clear the HFSI counter.
   - "Chain Link: 954-803"

REP 7.6 Tray 2 Feed/Retard/Nudger Roll (3TM)

Parts List on PL 10.4

Removal

NOTE: *When turning the power OFF, turn OFF the Power Switch first and then the Main Power Switch.*

1. Press the **Job Status** button to check that there are no jobs in progress.
2. Switch off the power and disconnect the power cord.
3. Remove Tray 2/3.
4. Remove the Tray 2 Feed/Retard/Nudger Roll. (Figure 1)
   a. Slide the chute towards you.
   b. Remove the Tray 2 Feed/Retard/Nudger Roll.

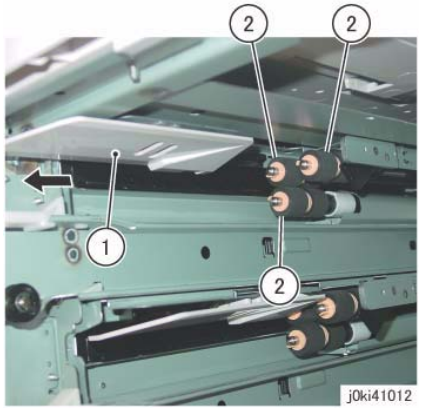

Figure 1 Remove the Tray 2 Feed/Retard/Nudger Rolls

Replacement

1. To install, carry out the removal steps in reverse order.
2. After a replacement, enter the Diag Mode and use "Initialize HFSI Counter" to clear the HFSI counter.
   - "Chain Link: 954-801"

REP 7.7 Tray 3 Feed/Retard/Nudger Roll (3TM)

Parts List on PL 10.6

Removal

NOTE: *When turning the power OFF, turn OFF the Power Switch first and then the Main Power Switch.*

1. Press the **Job Status** button to check that there are no jobs in progress.
2. Switch off the power and disconnect the power cord.
3. Remove Tray 3/4.
4. Remove the Tray 3 Feed/Retard/Nudger Roll. (Figure 1)
   a. Slide the chute towards you.
   b. Remove the Tray 3 Feed/Retard/Nudger Roll.

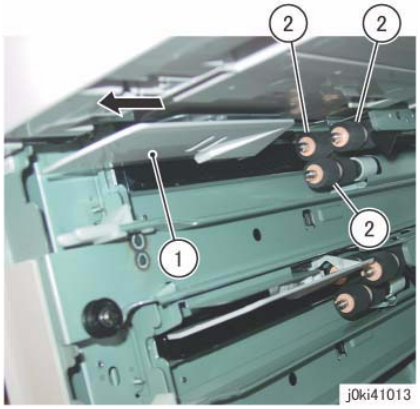

Figure 1 Remove the Tray 3 Feed/Retard/Nudger Rolls

Replacement

1. To install, carry out the removal steps in reverse order.
2. After a replacement, enter the Diag Mode and use "Initialize HFSI Counter" to clear the HFSI counter.
   - "Chain Link: 954-802"

REP 7.8 Tray 4 Feed/Retard/Nudger Roll (3TM)

Parts List on PL 10.8

Removal

NOTE: *When turning the power OFF, turn OFF the Power Switch first and then the Main Power Switch.*

1. Press the **Job Status** button to check that there are no jobs in progress.
2. Switch off the power and disconnect the power cord.
3. Remove Tray 3/4.
4. Remove the Tray 4 Feed/Retard/Nudger Roll. (Figure 1)
   a. Slide the chute towards you.
   b. Remove the Tray 4 Feed/Retard/Nudger Roll.

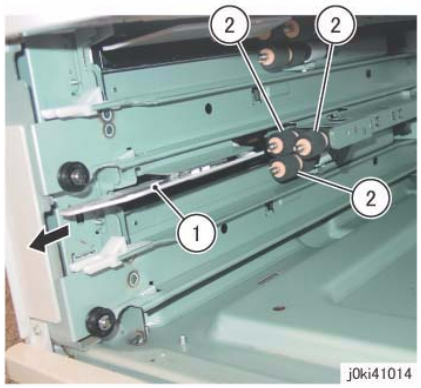

Figure 1 Remove the Tray 4 Feed/Retard/Nudger Rolls

Replacement

1. To install, carry out the removal steps in reverse order.
2. After a replacement, enter the Diag Mode and use "Initialize HFSI Counter" to clear the HFSI counter.
   - "Chain Link: 954-803"

REP 7.9 Tray Module PWB (3TM)

Parts List on PL 10.9

Replacement

NOTE: *When turning the power OFF, turn OFF the Power Switch first and then the Main Power Switch.*

1. Press the **Job Status** button to check that there are no jobs in progress.
2. Switch off the power and disconnect the power cord.
3. After replacement, set the switch of the Tray Module PWB as follows. (Figure 1)

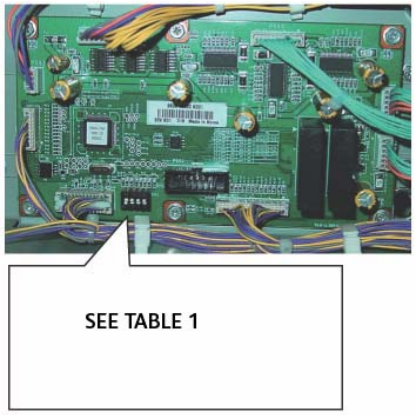

Figure 1 Tray Module PWB switch settings

Table 1 DIP Switch Settings

Tray Type	SW1	SW2	SW3	SW4
3TM	ON	ON	ON	ON

REP 7.10 Tray 3 Assembly (TTM)

Parts List on PL 11.1

Removal

NOTE: *When turning the power OFF, turn OFF the Power Switch first and then the Main Power Switch.*

1. Press the **Job Status** button to check that there are no jobs in progress.
2. Switch off the power and disconnect the power cord.
3. Pull out Tray 3.
4. Remove the paper from Tray 3.
5. Remove the Tray 3 Assembly. (Figure 1)
   a. Remove the screw.
   b. Remove the stopper.
   c. Remove the Tray 3 Assembly.

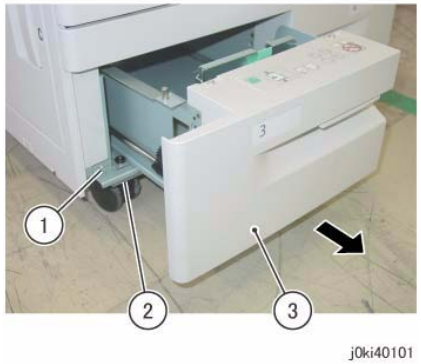

Figure 1 Remove the Tray 3 Assembly

Replacement

1. To install, carry out the removed steps in reverse order.

REP 7.11 Tray 4 Assembly (TTM)

Parts List on PL 11.1

Removal

NOTE: *When turning the power OFF, turn OFF the Power Switch first and then the Main Power Switch.*

1. Press the **Job Status** button to check that there are no jobs in progress.
2. Switch off the power and disconnect the power cord.
3. Pull out Tray 4.
4. Remove the paper from Tray 4.
5. Remove the Tray 4 Assembly. (Figure 1)
   a. Remove the screws (x2).
   b. Store the Tray 4 Transport Assembly.
   c. Remove the screw.
   d. Remove the stopper.
   e. Remove the Tray 4 Assembly.

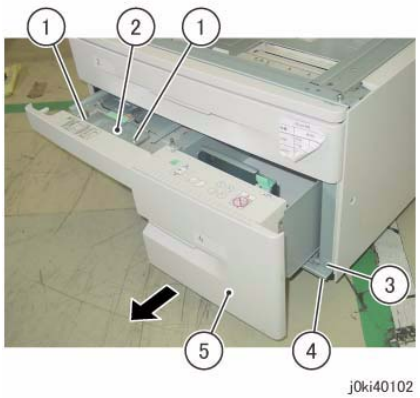

Figure 1 Remove the Tray 4 Assembly

Replacement

1. To install, carry out the removed steps in reverse order.

REP 7.12 Tray Cable (TTM)

Parts List on PL 11.4

Removal

NOTE: *When turning the power OFF, turn OFF the Power Switch first and then the Main Power Switch.*

1. Press the **Job Status** button to check that there are no jobs in progress.
2. Switch off the power and disconnect the power cord.
3. Remove the Tray 4 Assembly. (REP 7.11)
4. Remove the Tray 4 Cover. (Figure 1)
   a. Remove the screws (x2).
   b. Remove the Tray 4 Cover.

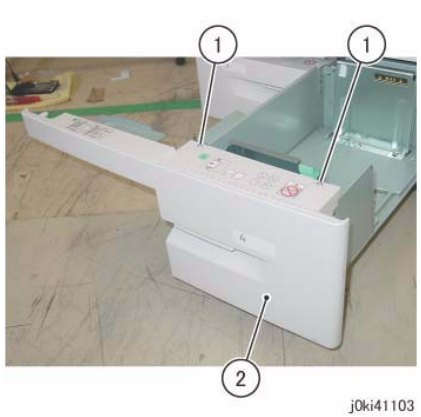

Figure 1 Remove the Tray 4 Cover

5. Remove the Tray Cable. (Figure 2)

   NOTE: *Only the removal procedure for the Tray Cable at the front is described here. The Tray Cable at the rear is removed in the same way.*

   a. Remove the E-Clip and Cable Guide.
   b. Remove the E-Clip and Cable Guide.

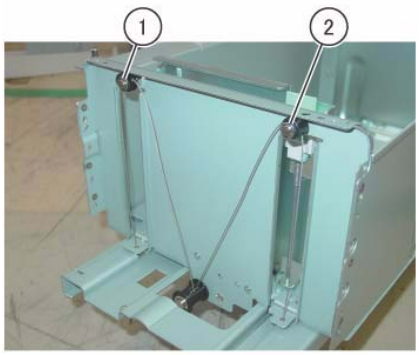

j0ki41104

Figure 2 Remove the Tray Cable

6. Remove the Tray Cable. (Figure 3)

   NOTE: *Only the removal procedure for the Tray Cable at the front is described here. The Tray Cable at the rear is removed in the same way.*

   a. Remove the E-Clip and the Pulley.
   b. Remove the Tray Cable.
   c. Remove the Tray Cable.

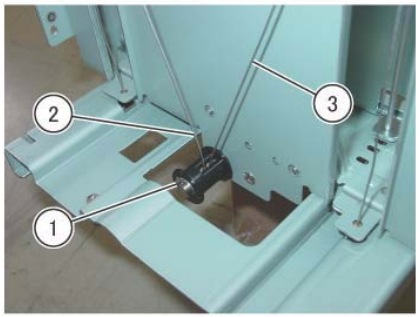

j0ki41105

Figure 3 Remove the Tray Cable

Replacement

1. To install, carry out the removed steps in reverse order.

REP 7.13 Tray 4 Feeder (TTM)

Parts List on PL 11.5

Removal

NOTE: *When turning the power OFF, turn OFF the Power Switch first and then the Main Power Switch.*

1. Press the **Job Status** button to check that there are no jobs in progress.
2. Switch off the power and disconnect the power cord.
3. Remove Tray 1 and Tray 2.
4. Disconnect the connector of the Tray 4 Feeder Assembly. (Figure 1)
   a. Disconnect the connectors (x2).

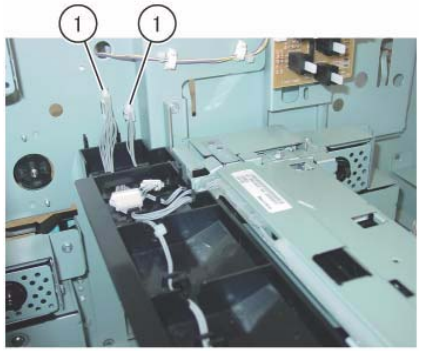

j0ki41106

Figure 1 Disconnect the connectors

5. Pull out the Tray 3/4.
6. Remove the Stud Bracket. (Figure 2)
   a. Remove the screw.
   b. Remove the Stud Bracket.

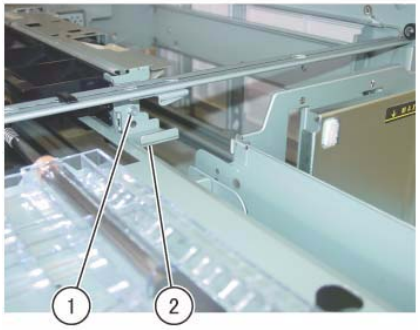

j0ki41107

Figure 2 Remove the Stud Bracket

7. Remove the screws that secure the Tray 4 Feeder Assembly. (Figure 3)
   a. Remove the screws (x2).

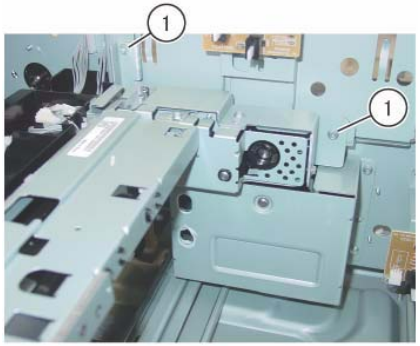

j0ki41108

Figure 3 Remove the screws

8. Remove the Tray 4 Feeder Assembly. (Figure 4)
   a. Lift the Lower Chute in the direction of the arrow.
   b. Move the Tray 4 Feeder Assembly in the direction of the arrow and remove it.

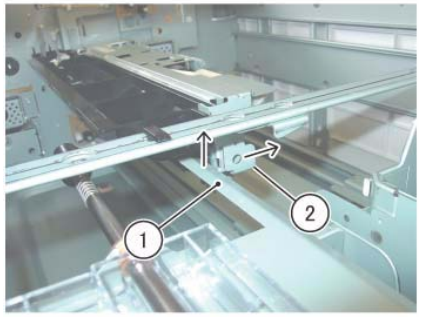

j0ki41109

Figure 4 Remove the Tray 4 Feeder Assembly

9. Disconnect the connector. (Figure 5)
   a. Remove the wire harnesses (x2) from the hooks (x2).
   b. Disconnect the connectors (x2).

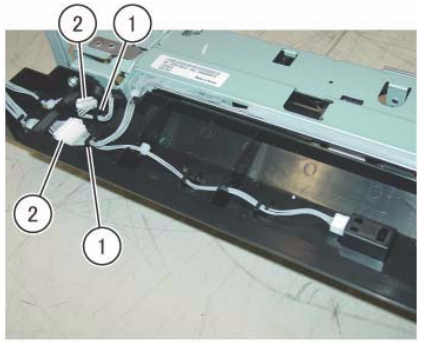

j0ki41110

Figure 5 Disconnect the connectors

10. Remove the Upper Chute. (Figure 6)
    a. Remove the screws (x2).
    b. Remove the Upper Chute.

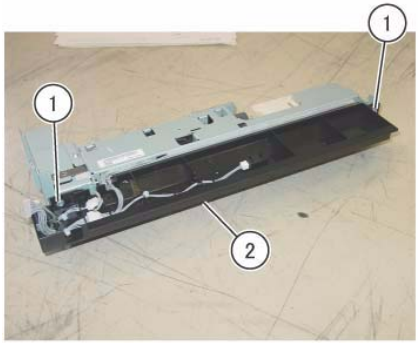

Figure 6 Remove the Upper Chute

11. Remove the Lower Chute. (Figure 7)
    a. Remove the screws (x2).
    b. Remove the Lower Chute.

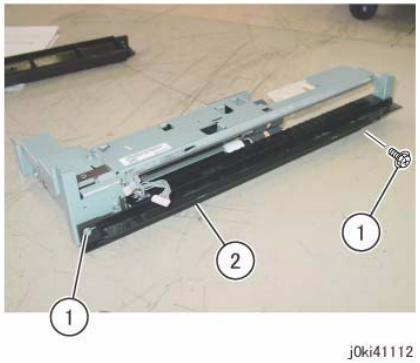

Figure 7 Remove the Lower Chute

12. Remove the various parts from the Tray 4 Feeder Assembly. (Figure 8)
    a. Remove the screws (x2).
    b. Remove the Bracket.
    c. Remove the screw.
    d. Remove the Bracket.
    e. Remove the screw.
    f. Remove the Bracket.

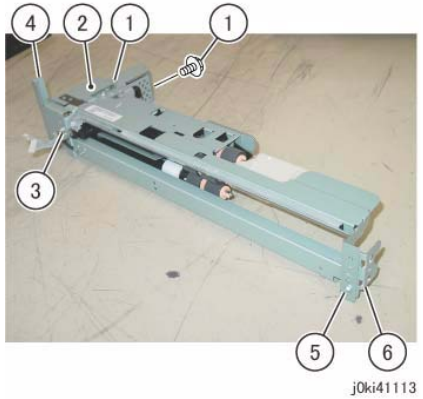

Figure 8 Remove the various Tray 4 Feeder Assembly parts

Replacement

1. To install, carry out the removed steps in reverse order.
2. After a replacement, enter the Diag Mode and use "Initialize HFSI Counter" to clear the HFSI counter.
    - "Chain-Link: 954-803"

REP 7.14 Tray 2 Feeder (TTM)

Parts List on PL 11.6

Removal

NOTE: *When turning the power OFF, turn OFF the Power Switch first and then the Main Power Switch.*

1. Press the **Job Status** button to check that there are no jobs in progress.
2. Switch off the power and disconnect the power cord.
3. Pull out Tray 2.
4. Open the Left Cover.
5. Remove the Feed Out Chute. (Figure 1)
   a. Remove the Feed Out Chute.

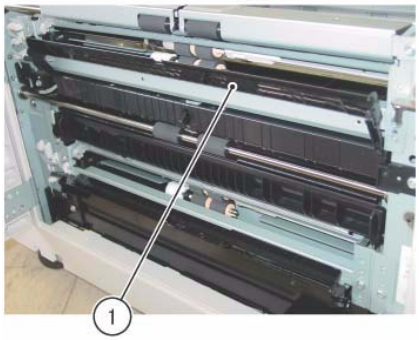

j0ki41114

Figure 1 Remove the Feed Out Chute

6. Remove the Bracket. (Figure 2)
   a. Remove the screw.
   b. Remove the Bracket.

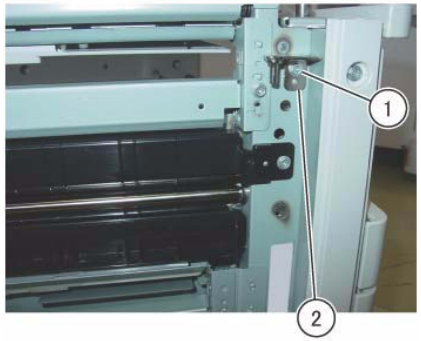

j0ki41115

Figure 2 Remove the Bracket

7. Disconnect the connector. (Figure 3)
   a. Release the wire harnesses (x2) from the clamps (x2).
   b. Disconnect the connectors (x2).

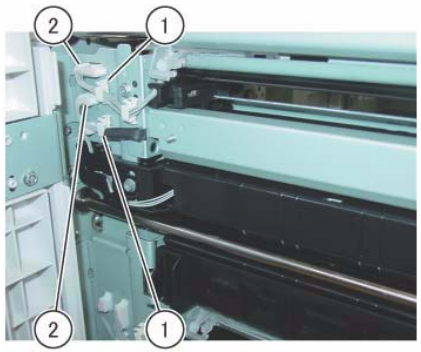

j0ki41116

Figure 3 Disconnect the connectors

8. Remove the Tray 2 Feeder. (Figure 4)
   a. Remove the screws (x2).
   b. Remove the Tray 2 Feeder.

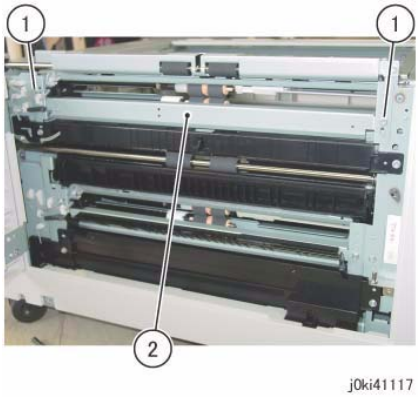

Figure 4 Remove the Tray 2 Feeder

Replacement

1. To install, carry out the removed steps in reverse order.
2. After a replacement, enter the Diag Mode and use "Initialize HFSI Counter" to clear the HFSI counter.
   - "Chain-Link: 954-801"

REP 7.15 Tray 3 Feeder (TTM)

Parts List on PL 11.6

Removal

NOTE: *When turning the power OFF, turn OFF the Power Switch first and then the Main Power Switch.*

1. Press the **Job Status** button to check that there are no jobs in progress.
2. Switch off the power and disconnect the power cord.
3. Remove Tray 2.
4. Pull out Tray 3 and Tray 4.
5. Open the Left Cover.
6. Remove the Lower Chute and the Feed Out Chute. (Figure 1)
   a. Remove the Lower Chute.
   b. Remove the Feed Out Chute.

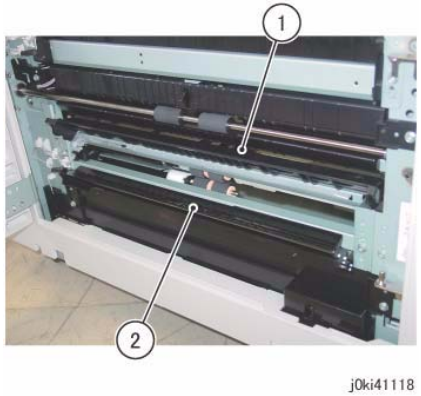

Figure 1 Remove the Lower and Feed Out Chutes

7. Disconnect the connector. (Figure 2)
   a. Release the wire harnesses (x2) from the clamps (x2).
   b. Disconnect the connectors (x2).

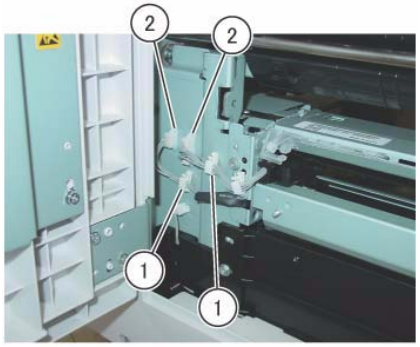

j0ki41119

Figure 2 Disconnect the connectors

8. Remove the screws that secure the Tray 3 Feeder Assembly. (Figure 3)
   a. Remove the screw.

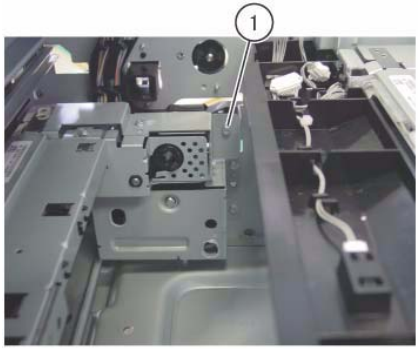

j0ki41120

Figure 3 Remove the screws

9. Remove the Tray 3 Feeder Assembly. (Figure 4)
   a. Remove the screws (x2).
   b. Remove Tray 3 Feeder Assembly.

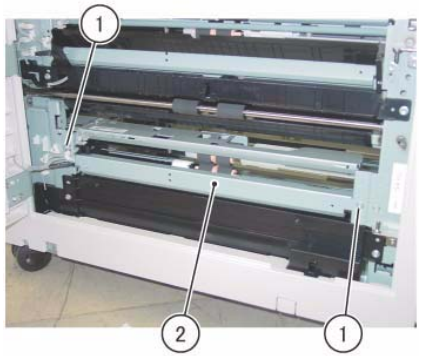

j0ki41121

Figure 4 Remove the Tray 3 Feeder Assembly

10. Remove the Tray 3 Feeder. (Figure 5)
    a. Remove the screws (x2).
    b. Remove the Bracket.

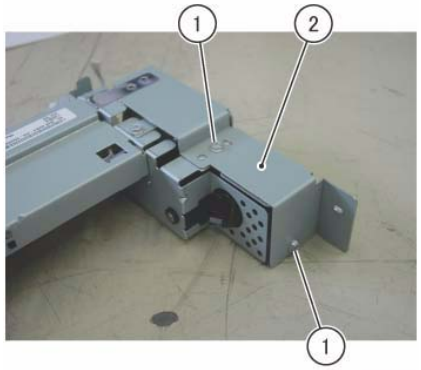

j0ki41122

Figure 5 Remove the Tray 3 Feeder

Replacement

1. To install, carry out the removed steps in reverse order.
2. After a replacement, enter the Diag Mode and use "Initialize HFSI Counter" to clear the HFSI counter.
   - "Chain-Link: 954-802"

REP 7.16 Tray 2 Feed/Retard/Nudger Roll (TTM)

Parts List on PL 11.8

Removal

NOTE: *When turning the power OFF, turn OFF the Power Switch first and then the Main Power Switch.*

NOTE: *Replace Feed, Retard, and Nudger Roll at the same time because they have the same duration of life.*

1. Press the **Job Status** button to check that there are no jobs in progress.
2. Switch off the power and disconnect the power cord.
3. Remove Tray 2.
4. Remove the Feed/Retard/Nudger Roll. (Figure 1)
   a. Slide the Front Chute towards you.
   b. Remove the Retard Roll.
   c. Remove the Nudger Roll.
   d. Remove the Feed Roll.

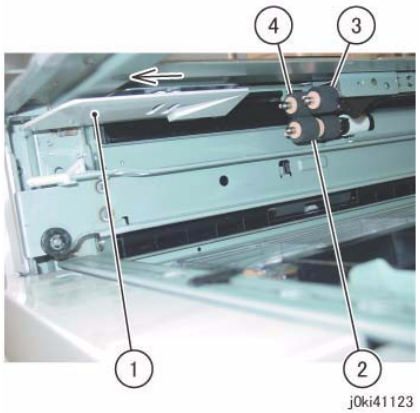

Figure 1 Remove the Feed/Retard/Nudger Rolls

Replacement

1. To install, carry out the removed steps in reverse order.
2. After a replacement, enter the Diag Mode and use "Initialize HFSI Counter" to clear the HFSI counter.
   - "Chain-Link: 954-801"

REP 7.18 Tray 3 Feed/Retard/Nudger Roll (TTM)

Parts List on PL 11.10

Removal

NOTE: *When turning the power OFF, turn OFF the Power Switch first and then the Main Power Switch.*

NOTE: *Replace Feed, Retard, and Nudger Roll at the same time because they have the same duration of life.*

1. Press the **Job Status** button to check that there are no jobs in progress.
2. Switch off the power and disconnect the power cord.
3. Remove Tray 2.
4. Pull out Tray 3 and Tray 4.
5. Remove the Feed/Retard/Nudger Roll. (Figure 1)
   a. Slide the Front Chute towards you.
   b. Remove the Retard Roll.
   c. Remove the Nudger Roll.
   d. Remove the Feed Roll.

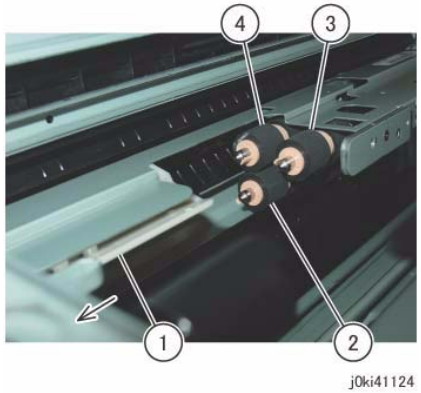

Figure 1 Remove the Feed/Retard/Nudger Rolls

Replacement

1. To install, carry out the removed steps in reverse order.
2. After a replacement, enter the Diag Mode and use "Initialize HFSI Counter" to clear the HFSI counter.
   - "Chain-Link: 954-802"

REP 7.19 Tray 4 Feed/Retard/Nudger Roll (TTM)

Parts List on PL 11.12

Removal

NOTE: *When turning the power OFF, turn OFF the Power Switch first and then the Main Power Switch.*

NOTE: *Replace Feed, Retard, and Nudger Roll at the same time because they have the same duration of life.*

1. Press the **Job Status** button to check that there are no jobs in progress.
2. Switch off the power and disconnect the power cord.
3. Remove Tray 2.
4. Pull out Tray 4.
5. Remove the Feed/Retard/Nudger Roll. (Figure 1)
   a. Slide the Front Chute towards you.
   b. Remove the Retard Roll.
   c. Remove the Nudger Roll.
   d. Remove the Feed Roll.

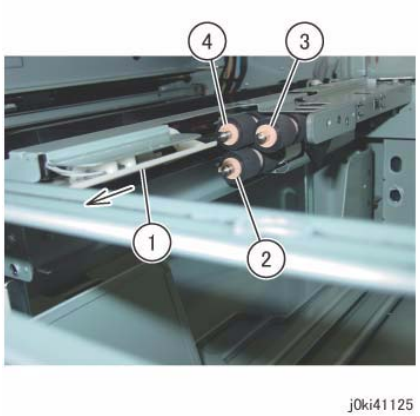

Figure 1 Remove the Feed/Retard/Nudger Rolls

Replacement

1. To install, carry out the removed steps in reverse order.
2. After a replacement, enter the Diag Mode and use "Initialize HFSI Counter" to clear the HFSI counter.
   - "Chain-Link: 954-803"

REP 7.20 Tray Module PWB (TTM)

Parts List on PL 11.17

Replacement

NOTE: *When turning the power OFF, turn OFF the Power Switch first and then the Main Power Switch.*

1. Press the **Job Status** button to check that there are no jobs in progress.
2. Switch off the power and disconnect the power cord.
3. After replacement, set the switch of the Tray Module PWB as follows. (Figure 1)

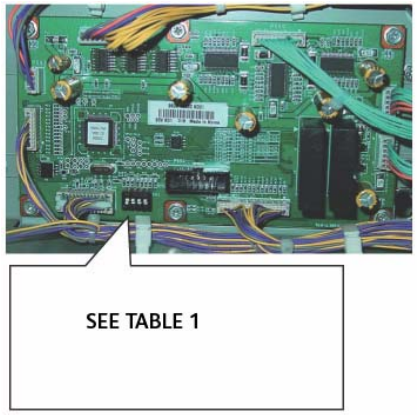

Figure 1 Tray Module PWB switch settings

Table 1 DIP Switch Settings

Tray Type	SW1	SW2	SW3	SW4
1TM	ON	OFF	ON	ON
TTM	ON	ON	OFF	ON

REP 7.21 Tray 5

Parts List on PL 13.1

Removal

NOTE: *When turning the power OFF, turn OFF the Power Switch first and then the Main Power Switch.*

1. Press the **Job Status** button to check that there are no jobs in progress.
2. Switch off the power and disconnect the power cord.
3. Remove the Left Rear Lower Cover. (PL 19.2)
4. Open the L/H Cover Unit.
5. Disconnect the connector. (Figure 1)
   a. Release the wire harness from the clamps (x4).
   b. Remove the cable band.
   c. Disconnect the connector.

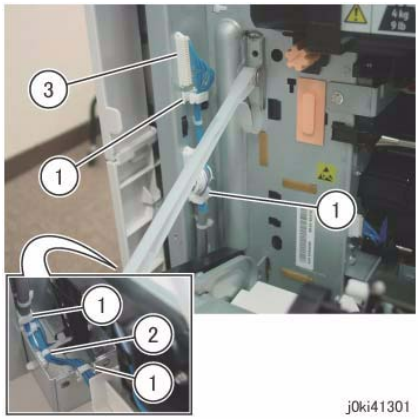

Figure 1 Disconnect the connectors

6. Close the L/H Cover Unit.
7. Remove Tray 5. (Figure 2)
   a. Remove the screws (x2).
   b. Remove Tray 5.

Figure 2 Remove Tray 5

Replacement

1. To install, carry out the removal steps in reverse order taking note of the following:

   NOTE: *Be careful not to pinch the wire harness of the Tray 5 when installing the Left Rear Lower Cover.*

REP 7.22 Tray 5 Feed/Retard/Nudger Roll

Parts List on PL 13.3, PL 13.4

Removal

NOTE: *When turning the power OFF, turn OFF the Power Switch first and then the Main Power Switch.*

1. Press the **Job Status** button to check that there are no jobs in progress.
2. Switch off the power and disconnect the power cord.
3. Remove the Top Cover. (Figure 1)
   a. Release the hooks (x2) and remove the Top Cover.

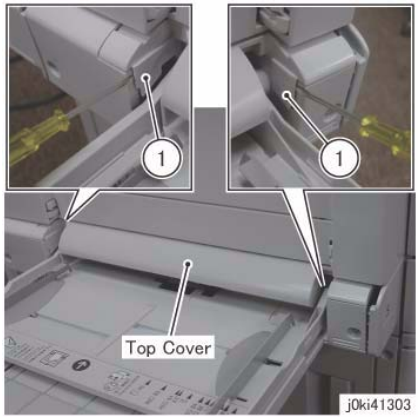

Figure 1 Remove the Top Cover

4. Remove the Nudger Roll. (Figure 2)
   a. Remove the Nudger Roll.

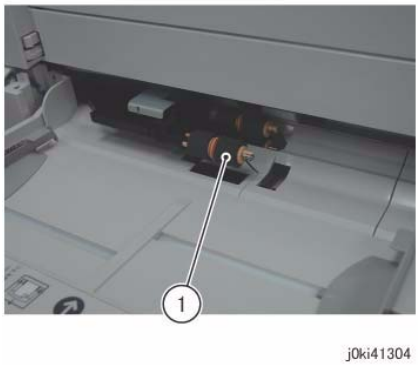

Figure 2 Remove the Nudger roll

5. Remove the Front Chute. (Figure 3)
   a. Remove the Front Chute.

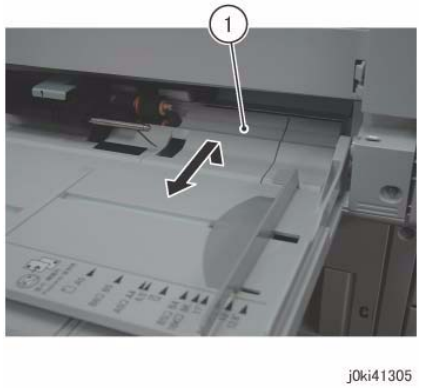

Figure 3 Remove the Front Chute

6. Remove the Feed/Retard Roll. (Figure 4)
   a. Remove the Feed Roll.
   b. Remove the Retard Roll.

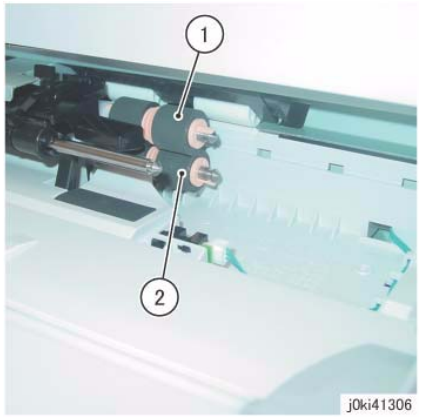

Figure 4 Remove the Feed/Retard Rolls

Replacement

1. To install, carry out the removal steps in reverse order.
2. After a replacement, enter the Diag Mode and use "Initialize HFSI Counter" to clear the HFSI counter.
   - "Chain Link: 954-805"

REP 7.23 Tray 5 Paper Size Sensor

Parts List on PL 13.5

Removal

NOTE: *When turning the power OFF, turn OFF the Power Switch first and then the Main Power Switch.*

1. Press the **Job Status** button to check that there are no jobs in progress.
2. Switch off the power and disconnect the power cord.
3. Gently extend the Extension Tray and pull it out. (Figure 1)
   a. Remove the Extension Tray.

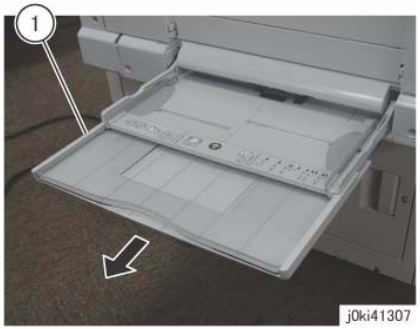

Figure 1 Remove the Extension Tray

4. Remove the Plate. (Figure 2)
   a. Remove the Tapping Screws (x3).
   b. Remove the Plate.

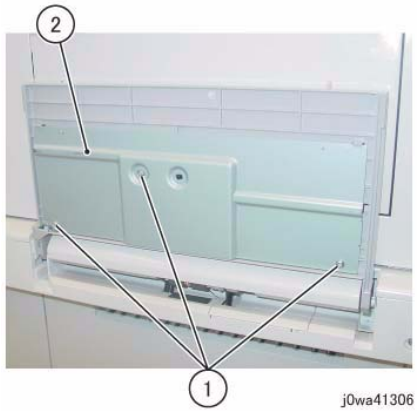

Figure 2 Remove the Plate

5. Remove the Tray 5 Paper Size Sensor. (Figure 3)
   a. Remove the Pinion Gear.
   b. Remove the Tapping Screws (x3).
   c. Remove the Tray 5 Paper Size Sensor.
   d. Release the wire harness from the Tray 5 Paper Size Sensor.
   e. Disconnect the connector.

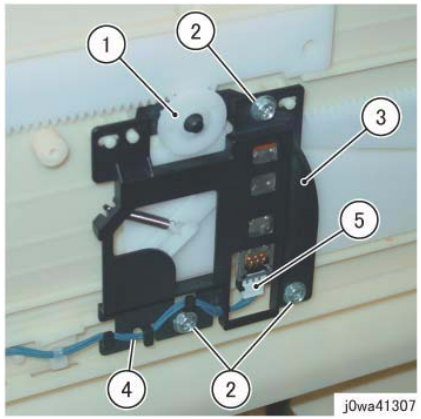

Figure 3 Remove the Tray 5 Paper Size Sensor

Replacement

1. To install, carry out the removal steps in reverse order taking note of the following:

NOTE: *When installing the Tray 5 Paper Size Sensor, make sure that the pin is inserted properly into the long hole of the Link. (Figure 4)*

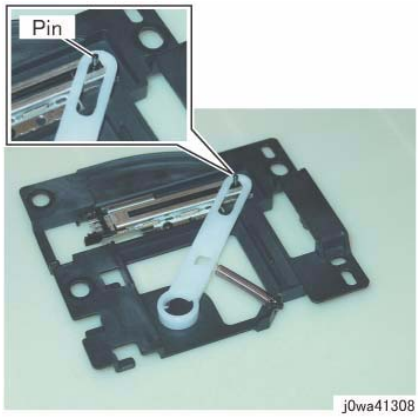

Figure 4 Insert the Pin

NOTE: *When installing the Pinion Gear, align the marks on the Front/Rear Rack to the marks on Tray 5. (Figure 5)*

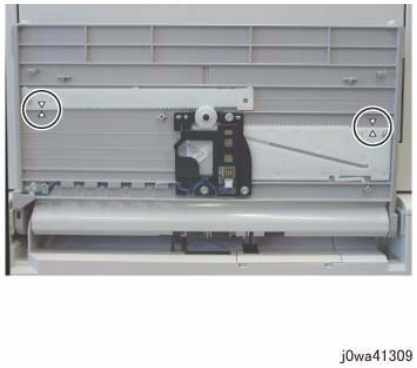

Figure 5 Installing the Pinion Gear

REP 7.24 Registration Transport Assembly

Parts List on PL 15.1

Removal

NOTE: *When turning the power OFF, turn OFF the Power Switch first and then the Main Power Switch.*

1. Press the **Job Status** button to check that there are no jobs in progress.
2. Switch off the power and disconnect the power cord.
3. Remove the L/H Cover Unit. (REP 14.1)
4. Remove the Tray 5. (REP 7.21)
5. Remove the Registration Transport Assembly. (Figure 1)
   a. Disconnect the connector.
   b. Remove the screws (x2).
   c. Remove the Registration Transport Assembly.

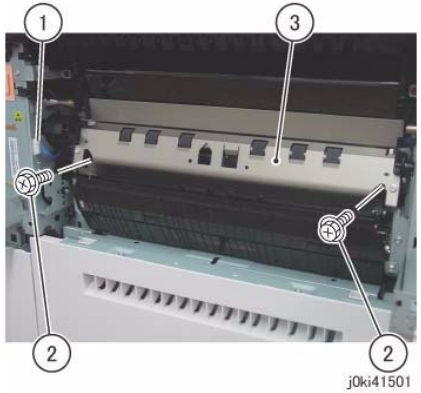

Figure 1 Remove the Registration Transport Assembly

Replacement

1. To install, carry out the removal steps in reverse order.

CAUTION

Make sure you secure the screw (Figure 1) at the rear side of the Registration Transport Assembly. If it is not secured, it may cause the DUP MOT DRIVE of the MD PWB to be damaged.

REP 9.1 Transfer Belt Cleaner Assembly

Parts List on PL 6.1

Removal

NOTE: *When turning the power OFF, turn OFF the Power Switch first and then the Main Power Switch.*

1. Press the **Job Status** button to check that there are no jobs in progress.
2. Switch off the power and disconnect the power cord.
3. Open the Front Cover.
4. Rotate the shutter of the Transfer Belt Cleaner Assembly clockwise. (Figure 1)
   a. Remove the Tapping Screw.
   b. Rotate the shutter in clockwise direction.

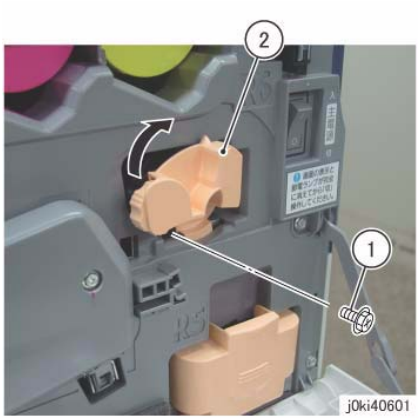

Figure 1 Rotate the shutter clockwise

5. Remove the Transfer Belt Cleaner Assembly. (Figure 2)
   a. Rotate the Knob in the direction of the arrow until it is free.
   b. Remove the Transfer Belt Cleaner Assembly.

Figure 2 Remove the Transfer Belt Cleaner Assembly

Replacement

1. To install, carry out the removal steps in reverse order.
2. After a replacement, enter the Diag Mode and use "Initialize HFSI Counter" to clear the HFSI counter.
   - "Chain Link: 954-822"

REP 9.2 IBT Assembly

Parts List on PL 6.1

Removal

NOTE: *When turning the power OFF, turn OFF the Power Switch first and then the Main Power Switch.*

NOTE: *When removing the Drum, cover it with a black sheet, etc. to prevent light fatigue.*

NOTE: *Do not touch the Drum surface with your hands.*

NOTE: *Do not touch the Transfer Belt surface with your hands.*

NOTE: *When placing the IBT Assembly on the floor, spread paper or sheets, etc. on the floor beforehand to ensure that dirt or dust do not get stuck to the Transfer Belt.*

1. Press the **Job Status** button to check that there are no jobs in progress.
2. Switch off the power and disconnect the power cord.
3. Remove the Drum (Y, M, C, K). (REP 9.5)
4. Remove the Transfer Belt Cleaner Assembly. (REP 9.1)
5. Remove the Tension Lever of the Transfer Belt. (Figure 1)
   a. Remove the screw.
   b. Remove the Tension Lever.

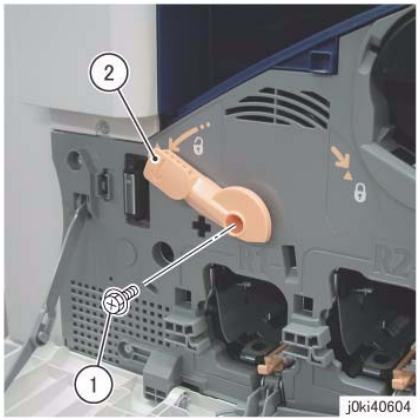

Figure 1 Remove the Tension Lever

6. Remove the Fuser. (REP 10.1)
7. Open the L/H Cover Unit.
8. Remove the Rear Support from the L/H Cover Unit. (Figure 2)
   a. Remove the KL-Clip.
   b. Remove the Rear Support.

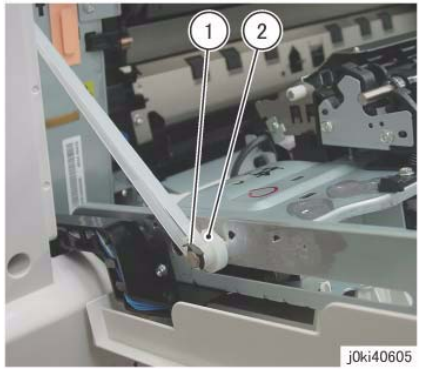

Figure 2 Remove the Rear Support

9. To open the L/H Cover Unit to the service position, rotate the Front Support 90 degree counterclockwise and pull it out one level. (Figure 3)

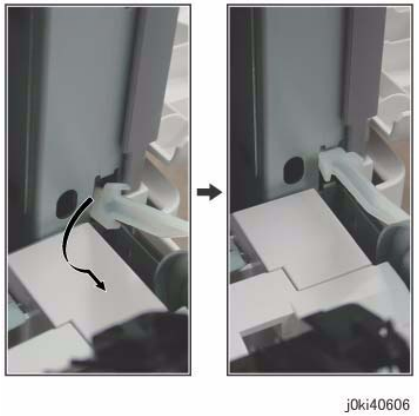

Figure 3 Open the L/H Cover

10. Remove the Front Lock Bracket. (Figure 4)
    a. Remove the screw.
    b. Remove the Front Lock Bracket.

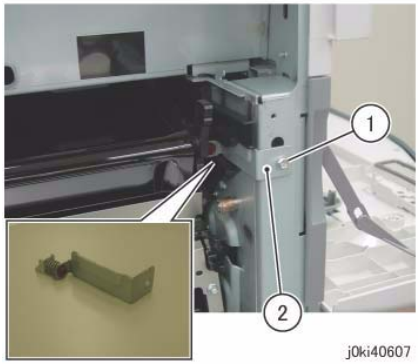

Figure 4 Remove the Front Lock Bracket

11. Remove the Rear Lock Bracket. (Figure 5)
    a. Remove the screw.
    b. Remove the Rear Lock Bracket.

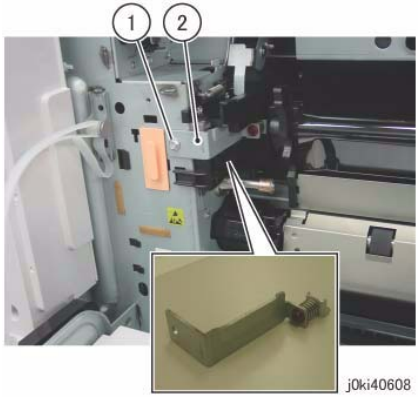

Figure 5 Remove the Rear Lock Bracket

12. Pull the Stopper Lever. (Figure 6)
    a. Pull the Stopper Lever.

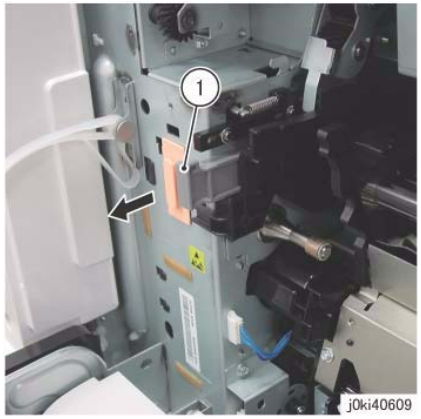

Figure 6 Pull the Stopper Lever

13. Pull out the IBT Assembly by holding onto the indicated sections (A) of the Front/Rear Frame until the Handle at the front/rear become accessible. (Figure 7)

    NOTE: *When pulling out the IBT Assembly, take care because it may drop from the front/ rear rails if pulled too far out.*

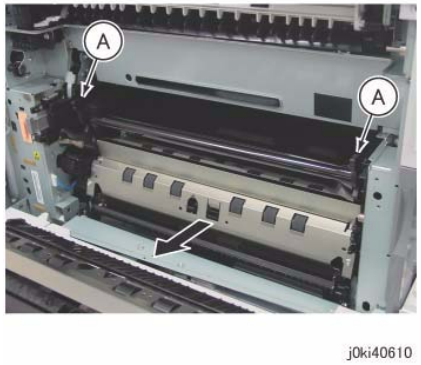

Figure 7 Pull out the IBT Assembly

14. Hold onto the Handle at the front/rear and remove the IBT Assembly. (Figure 8)
    a. Hold onto the handles (x2) and pull it out.

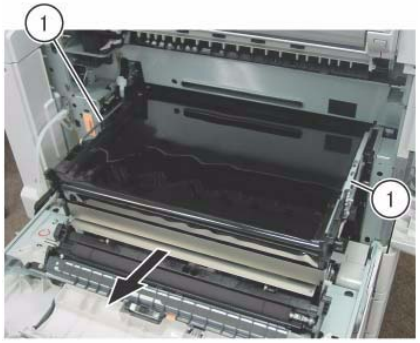

j0ki40611

Figure 8 Hold onto handle and remove the IBT Assembly

15. While holding the IBT Assembly steady with your hand, remove the handle at the rear. (Figure 9)
    a. Remove the KL-Clips (x2).
    b. Remove the handle.

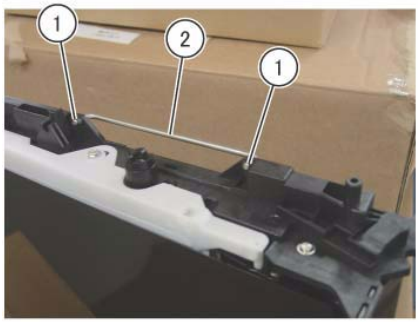

j0ki40612

Figure 9 Remove the handle

16. Push the handle all the way in at the position shown in (Figure 10).
    a. Install the handle.

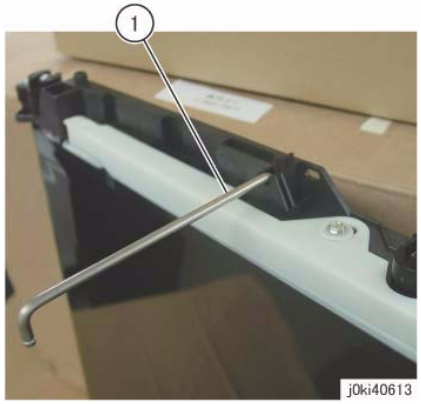

j0ki40613

Figure 10 Push the handle all the way in

17. With the handle at the bottom, place the IBT Assembly into an upright position.

Replacement

1. To install, carry out the removal steps in reverse order taking note of the following:

   NOTE: *When installing the handle at the rear, install the KL-Clip in the orientation shown in (Figure 11)*

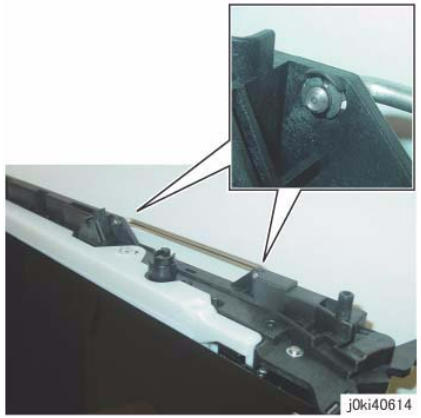

j0ki40614

Figure 11 Install the KL-Clip

NOTE: *Insert the IBT Assembly completely into the Main Unit. After that, the positioning is done by the following procedure.*

a. Secure the Front Lock Bracket.

b. Insert the Stopper Lever while pressing the indicated sections (A in Figure 7) of the Rear Frame against the Main Unit.

c. Secure the Rear Lock Bracket.

2. When replacing the IBT Assembly, switch the Tension Plate of the new IBT Assembly.
   - Remove the Tension Plate. (Figure 12)
     a. Remove the screw.
     b. Remove the Tension Plate.

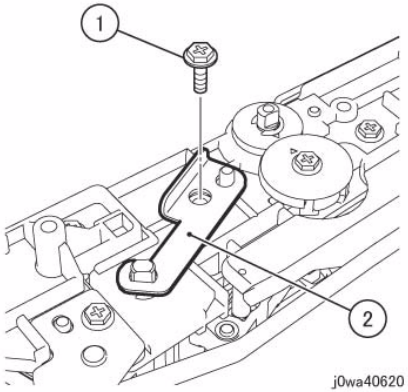

Figure 12 Switch the Tension Plate

   - Install the Tension Plate. (Figure 13)
     a. Install the Tension Plate.
     b. Tighten the screw.

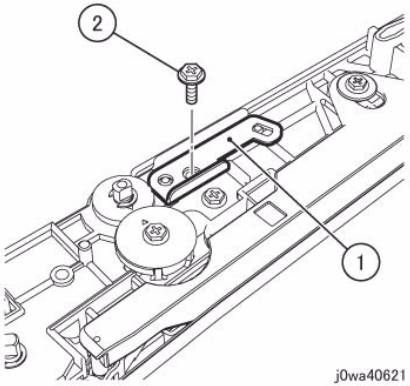

Figure 13 Install the Tension Plate

3. After a replacement, enter the Diag Mode and use "Initialize HFSI Counter" to clear the HFSI counter.
   - "Chain Link: 954-820"

REP 9.3 Transfer Belt

Parts List on PL 6.3

Removal

NOTE: *When turning the power OFF, turn OFF the Power Switch first and then the Main Power Switch.*

NOTE: *When removing the Drum, cover it with a black sheet, etc. to prevent light fatigue.*

NOTE: *Do not touch the Drum surface with your hands.*

NOTE: *Do not touch the Transfer Belt surface with your hands.*

NOTE: *Do not touch the Transfer Drive Roll surface with your hands.*

1. Press the **Job Status** button to check that there are no jobs in progress.
2. Switch off the power and disconnect the power cord.
3. Remove the Drum (Y, M, C, K). (REP 9.5)
4. Remove the Transfer Belt Cleaner Assembly. (REP 9.1)
5. Remove the IBT Assembly. (REP 9.2)
6. Remove the Tension Plate. (Figure 1)
   a. Remove the screw.
   b. Remove the Tension Plate.

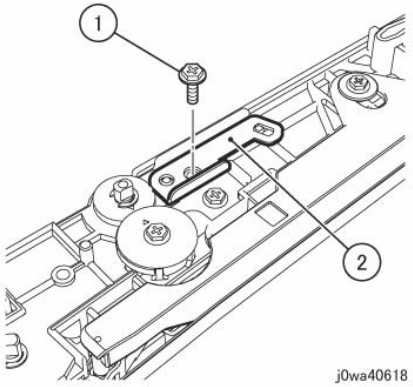

Figure 1 Remove the Tension Plate

7. Switch the Tension Plate that was removed in Step 4. (Figure 2)
   a. Install the Tension Plate.
   b. Tighten the screw.

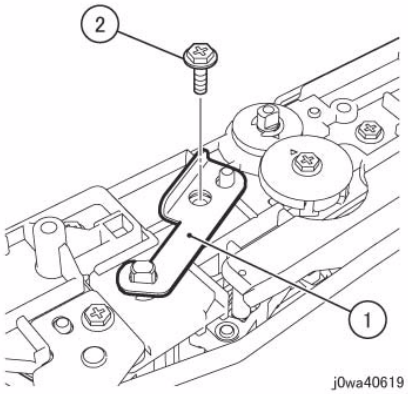

Figure 2 Switch the Tension Plate

8. Remove the Inlet Chute. (Figure 3)
   a. Remove the screw.
   b. Remove the Inlet Chute.

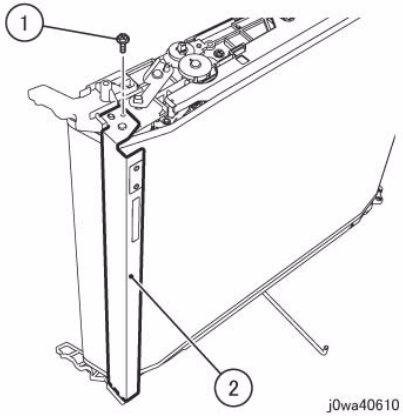

Figure 3 Remove the Inlet Chute

9. Remove the BUR Front Frame. (Figure 4)
   a. Remove the screw.
   b. Remove the BUR Front Frame.

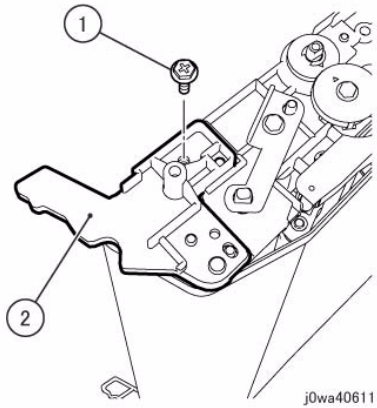

Figure 4 Remove the BUR Front Frame

10. Remove the Backup Roll. (Figure 5)
    a. Remove the Backup Roll.

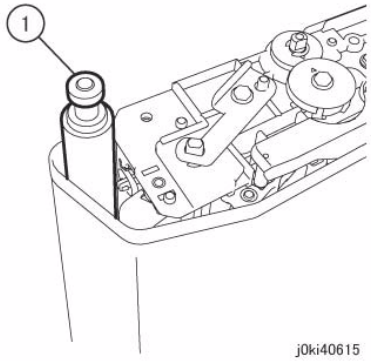

Figure 5 Remove the Backup Roll

11. Remove the Transfer Belt. (Figure 6)

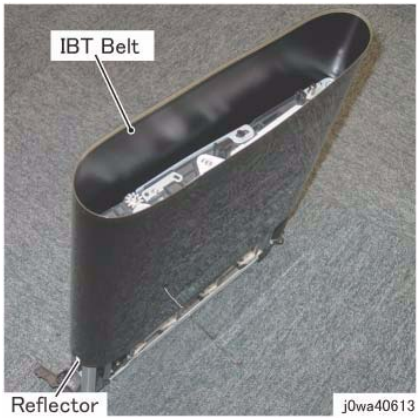

Figure 6 remove the Transfer Belt (IBT)

Replacement

1. To install, carry out the removal steps in reverse order taking note of the following:

   NOTE: *When installing the Transfer Belt, install it with the TR0 Seal at the rear.*

2. After a replacement, enter the Diag Mode and use "Initialize HFSI Counter" to clear the HFSI counter.
   - "Chain Link: 954-820"

REP 9.4 TR0 Seal

Parts List on PL 6.3

Replacement

NOTE: *When turning the power OFF, turn OFF the Power Switch first and then the Main Power Switch.*

NOTE: *When removing the Drum, cover it with a black sheet, etc. to prevent light fatigue.*

NOTE: *Do not touch the Drum surface with your hands.*

NOTE: *Do not touch the Transfer Belt surface with your hands.*

NOTE: *Do not touch the IBT Drive Roll surface with your hands.*

1. Press the **Job Status** button to check that there are no jobs in progress.
2. Switch off the power and disconnect the power cord.
3. Remove the Drum (Y, M, C, K) (REP 9.5).
4. Remove the Transfer Belt Cleaner Assembly. (REP 9.1)
5. Remove the IBT Assembly. (REP 9.2)
6. Remove the Transfer Belt. (REP 9.3)
7. Open the DADF or Platen Cover and place a piece of cloth, etc. on the Platen Glass to create a working space.
8. Using drum cleaner, clean the surface beside the old TR0 Seal (left or right, either one is ok; this will be the position to paste the new TR0 Seal). (Figure 1)

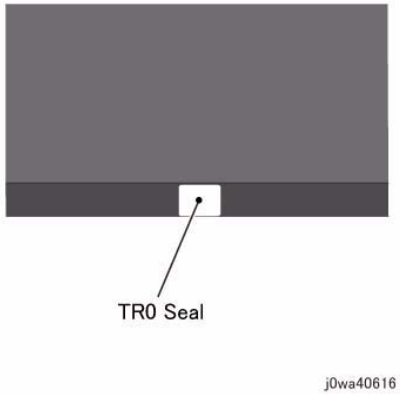

Figure 1 Clean the surface beside the old TR0 Seal

9. Paste the new TR0 Seal at approx. 1mm to 2mm beside the old TR0 Seal and less than 0.5mm away from the edge of the Transfer Belt. (Figure 2)

NOTE: *When peeling off the new TR0 Seal from its backing paper, make sure to do so by first bending the backing paper away to expose the edge. If you attempt to peel off the TR0 Seal directly, it may result in its edges getting bunched up and rendering it unusable.*

NOTE: *If the new TR0 Seal is skewed, or has dirt/air trapped in it, redo the pasting.*

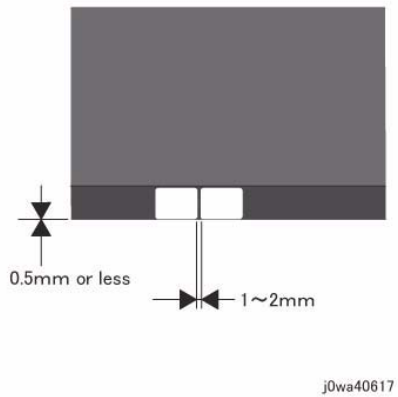

Figure 2 Paste the new TR0 Seal

10. From the top, gently press on the whole surface of the pasted TR0 Seal.

    NOTE: *Do not wipe it with a dry cloth, etc.*

11. Peel off the old TR0 Seal and use drum cleaner to clean off any adhesive that may have remained on the Transfer Belt.
12. Clean the IBT Home Position Sensor by using a piece of dry cloth.

Removal

1. To install, carry out the removal steps in reverse order taking note of the following:

   NOTE: *When installing the Transfer Belt, install it with the TR0 Seal at the rear.*

REP 9.5 Drum

Parts List on PL 8.1

Removal

NOTE: *When turning the power OFF, turn OFF the Power Switch first and then the Main Power Switch.*

NOTE: *When removing the Drum, cover it with a black sheet, etc. to prevent light fatigue.*

NOTE: *Do not touch the Drum surface with your hands.*

1. Press the **Job Status** button to check that there are no jobs in progress.
2. Switch off the power and disconnect the power cord.
3. Open the Front Cover.
4. Rotate the Tension Lever of the Transfer Belt counterclockwise.
5. Open the Drum Cover.
6. Remove the drum. (Figure 1)
   a. Pull the handle of the Drum in the direction of the arrow and remove the Drum.

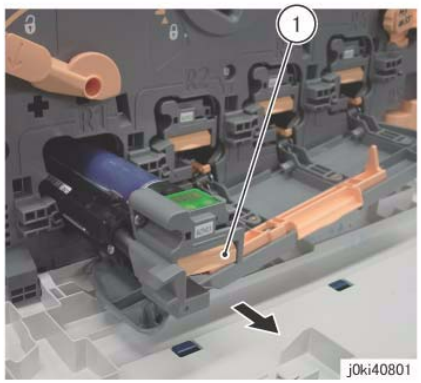

Figure 1 Remove the drum

Replacement

1. To install, carry out the removal steps in reverse order.

REP 9.6 Erase Lamp Unit (K)

Parts List on PL 8.1

Removal

NOTE: *When turning the power OFF, turn OFF the Power Switch first and then the Main Power Switch.*

NOTE: *When removing the Drum, cover it with a black sheet, etc. to prevent light fatigue.*

NOTE: *Do not touch the Drum surface with your hands.*

1. Press the **Job Status** button to check that there are no jobs in progress.
2. Switch off the power and disconnect the power cord.
3. Remove the following parts:
   - Drum (Y, M, C, K) (REP 9.5)
   - Toner Cartridge (Y, M, C, K) (PL 5.1)
   - Waste Box (PL 8.2)
   - Transfer Belt Cleaner Assembly (REP 9.1)
   - IBT Assembly (REP 9.2)
4. Remove the Drum Cover. (Figure 1)
   a. Remove the screws (x2).
   b. Open the Drum Cover up to the position in Figure 1.
   c. Remove the Drum Cover.

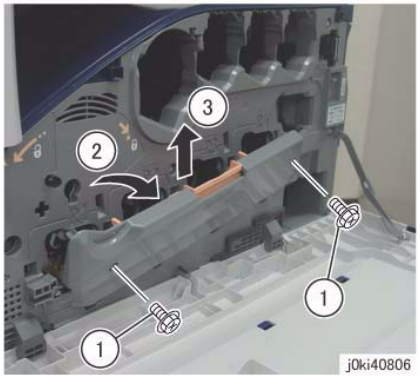

Figure 1 Remove the Drum Cover

5. Open the L/H Cover Unit.
6. Remove the Front Cover together with the Inner Cover. (Figure 2)
   a. Remove the screws (x6).
   b. Remove the Front Cover together with the Inner Cover.

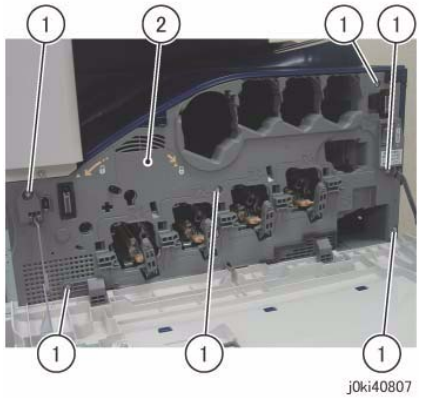

Figure 2 Remove the Front and Inner Cover together

7. [7545/56]:
   Remove the Process 1 Fan and Duct. (Figure 3)
   a. Disconnect the connector.
   b. Remove the screw.
   c. Remove the Process 1 Fan and Duct.
   d. Remove the cable band.

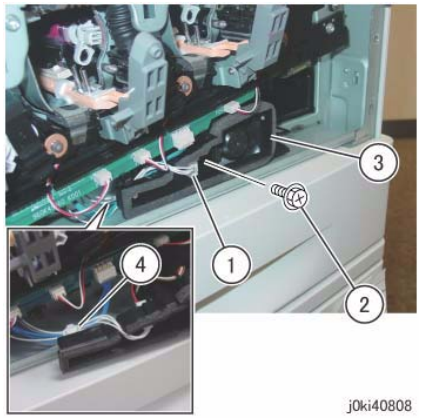

Figure 3 Remove the Process 1 Fan and Duct

8. Disconnect the connectors of the ATC PWB Assembly. (Figure 4)
   a. Release the wire harness from the hooks (x4).
   b. Disconnect the connectors (x5).

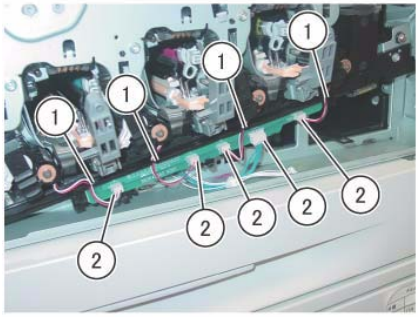

Figure 4 Disconnect the connectors

9. Remove the ATC PWB Assembly. (Figure 5)
   a. Remove the screws (x2).
   b. Remove the ATC PWB Assembly.

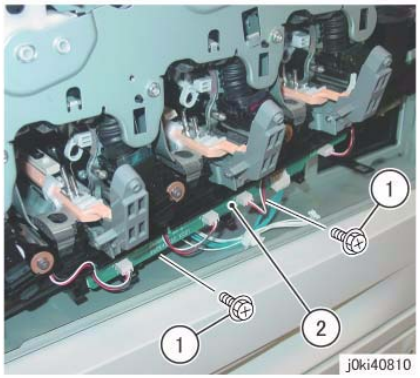

Figure 5 Remove the ATC PWB Assembly

10. Close the shutters of the Dispenser Pipe (Y, M, C, K) and the Dev.eloper Housing Assembly
    (Y, M, C, K). (Figure 6)
    a. Close the shutter.
    b. Turn the Lever counterclockwise and close the shutter.

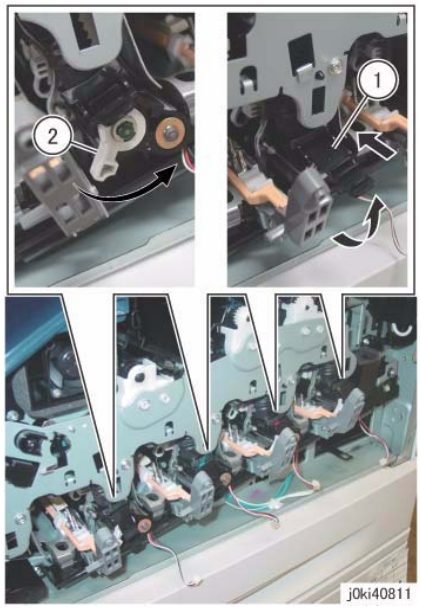

Figure 6 Close the shutters

11. Remove the Waste Toner Pipe Assembly. (Figure 7)
    a. Remove the screws (x3).
    b. Remove the Waste Toner Pipe Assembly.

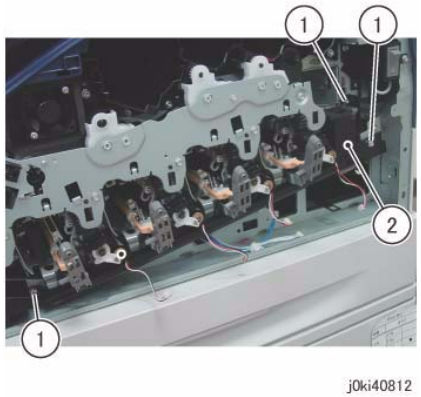

Figure 7 Remove the Waste Toner Pipe Assembly

NOTE: *Make sure that the shutter at the Waste Box side of the Waste Toner Pipe Assembly is closed. Also make sure that the shutter is closed when installing. (Figure 8)*

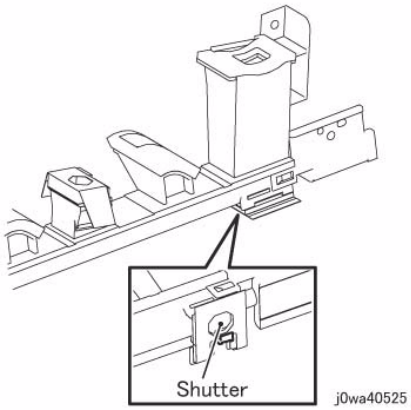

Figure 8 Make sure the shutter is closed during Removal/Install

12. Remove the Plate. (Figure 9)
    a. Remove the screws (x6).
    b. Remove the Plate.

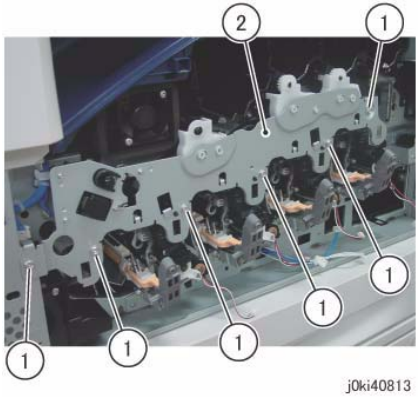

Figure 9 Remove the Plate

13. Remove the Drum/Dev. Drive Unit:
    - 7525/7530/7535 (REP 4.3)
    - 7545/7556 (REP 4.4)
14. Remove the MOB ADC Assembly. (REP 9.16)
15. Remove the screw that secures the Erase Lamp Unit (K) at the rear. (Figure 10)
    a. Remove the screw.

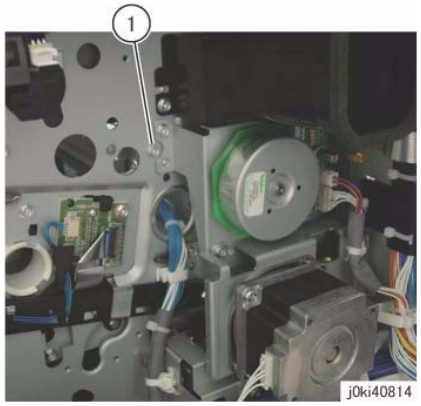

Figure 10 Remove the screw

16. Remove the Erase Lamp Unit (K). (Figure 11)
    a. Disconnect the connector.
    b. Remove the screws (x2).
    c. Remove the Erase Lamp Unit (K).

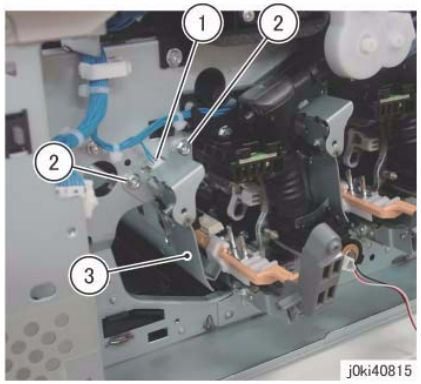

Figure 11 Remove the Erase Lamp Unit (K)

Replacement

1. To install, carry out the removal steps in reverse order.

NOTE: *When cleaning the inner part of the Waste Toner Pipe Assembly, siphon the cleaner from the outlet at the Waste Box side. Rotating the gear indicated in the figure clockwise will result in the toner being ejected. (Figure 12)*

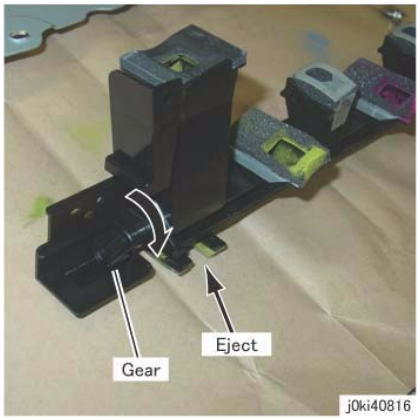

Figure 12 Siphon the cleaner from the outlet at the Waste Box side

NOTE: *After installing the Waste Toner Pipe Assembly, do not forget to open the shutters of the Dispenser Pipe (Y, M, C, K) and the Dev.eloper Housing Assembly (Y, M, C, K) that were closed in Step 8.*

REP 9.7 Erase Lamp Unit (Y, M, C)

Parts List on PL 8.1

Removal

NOTE: *When turning the power OFF, turn OFF the Power Switch first and then the Main Power Switch.*

NOTE: *When removing the Drum, cover it with a black sheet, etc. to prevent light fatigue.*

NOTE: *Do not touch the Drum surface with your hands.*

NOTE: *Because the removal procedure for the Erase Lamp Units (Y, M, C) is the same, the following describes only the procedure for the Erase Lamp Unit (C).*

NOTE: *Place paper under the removed Dispenser Pipe (Y, M, C, K) and on the floor so that the toner, etc. do not dirty the floor and the machine during servicing.*

1. Press the **Job Status** button to check that there are no jobs in progress.
2. Switch off the power and disconnect the power cord.
3. Remove the following parts:
   - Drum (Y, M, C, K) (REP 9.5)
   - Toner Cartridge (Y, M, C, K) (PL 5.1)
   - Waste Box (PL 8.2)
   - Transfer Belt Cleaner Assembly (REP 9.1)
   - IBT Assembly (REP 9.2)
4. Remove the Drum Cover. (Figure 1)
   a. Remove the screws (x2).
   b. Open the Drum Cover up to the position in Figure 1.
   c. Remove the Drum Cover.

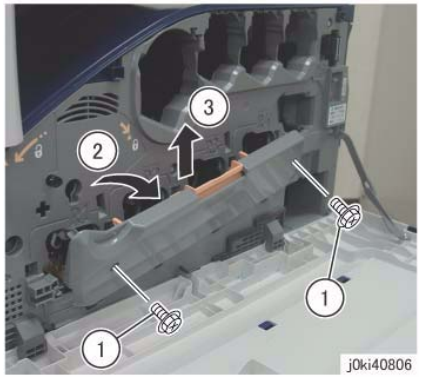

Figure 1 Remove the Drum Cover

5. Open the L/H Cover Unit.
6. Remove the Front Cover together with the Inner Cover. (Figure 2)

a. Remove the screws (x6).
b. Remove the Front Cover together with the Inner Cover.

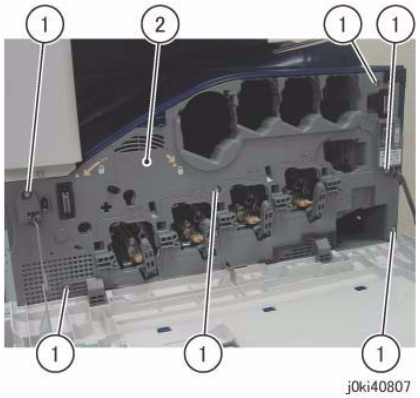

Figure 2 Remove the Front and Inner Covers together

7. [7545/56]:
   Remove the Process 1 Fan and Duct. (Figure 3)
   a. Disconnect the connector.
   b. Remove the screw.
   c. Remove the Process 1 Fan and Duct.
   d. Remove the cable band.

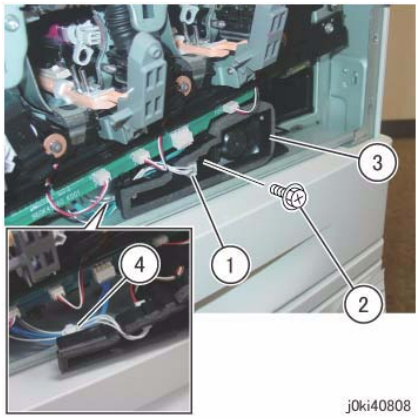

Figure 3 Remove the cable band

8. Disconnect the connectors of the ATC PWB Assembly. (Figure 4)
   a. Release the wire harness from the hooks (x4).
   b. Disconnect the connectors (x5).

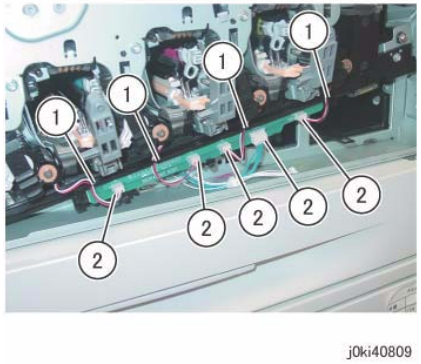

Figure 4 Disconnect the connectors

9. Remove the ATC PWB Assembly. (Figure 5)
   a. Remove the screws (x2).
   b. Remove the ATC PWB Assembly.

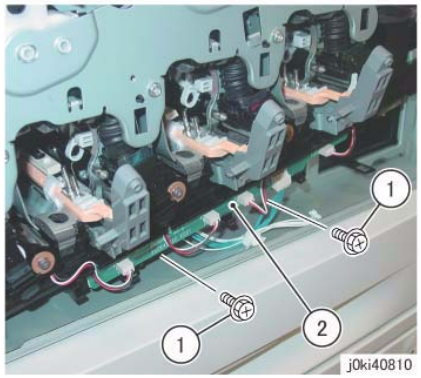

Figure 5 Remove the ATC PWB Assembly

10. Close the shutters of the Dispenser Pipe (Y, M, C, K) and the Dev.eloper Housing Assembly
    (Y, M, C, K). (Figure 6)
    a. Close the shutter.
    b. Turn the Lever counterclockwise and close the shutter.

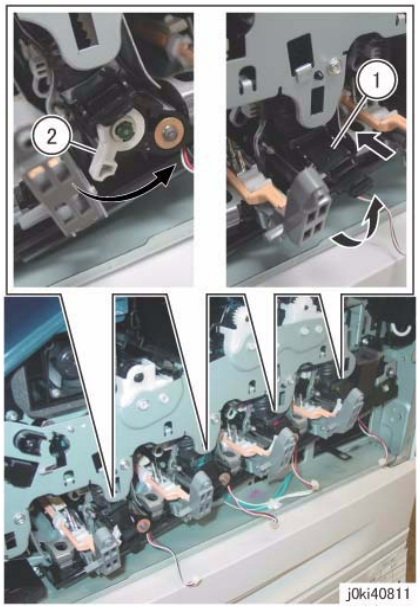

Figure 6 Close the shutters (Y,M,C,K)

11. Remove the Waste Toner Pipe Assembly. (Figure 7)
    a. Remove the screws (x3).
    b. Remove the Waste Toner Pipe Assembly.

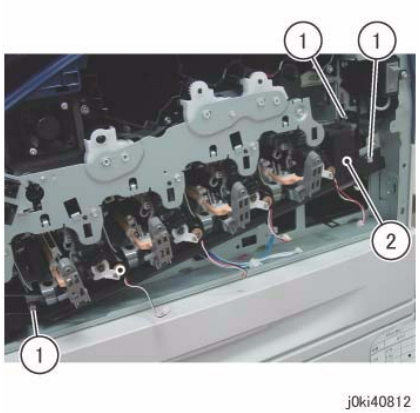

Figure 7 Remove the Waste Toner Pipe Assembly

NOTE: *Make sure that the shutter at the Waste Box side of the Waste Toner Pipe Assembly is closed. Also make sure that the shutter is closed when installing. (Figure 8)*

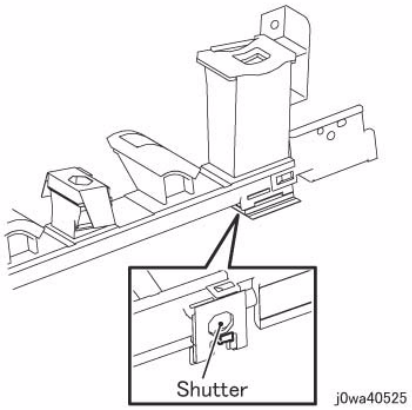

Figure 8 Make sure the shutter is closed during Removal/Install

12. Remove the Plate. (Figure 9)
    a. Remove the screws (x6).
    b. Remove the Plate.

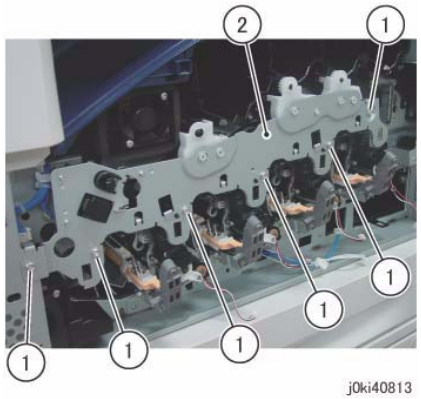

Figure 9 Remove the Plate

13. Remove the Drum/Dev. Drive Unit:
    - 7525/7530/7535 (REP 4.3)
    - 7545/7556 (REP 4.4)
14. Remove the Dispenser Pipe (K). (Figure 10)
    a. Pull the joint section between the Dispenser Pipe (K) and the Guide Assembly (K) towards you.
    b. Release the hooks (x2) and remove the Dispenser Pipe (K).

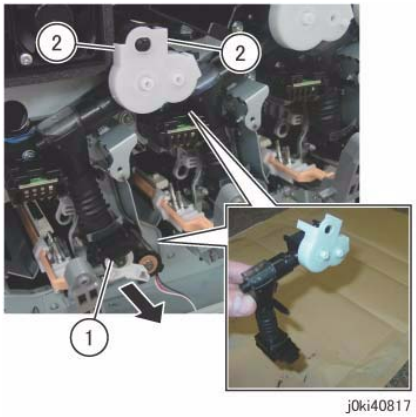

Figure 10 Remove the Dispenser Pipe (k)

15. Remove the screw that secures the Erase Lamp Unit (C) at the rear. (Figure 11)
    a. Remove the screw.

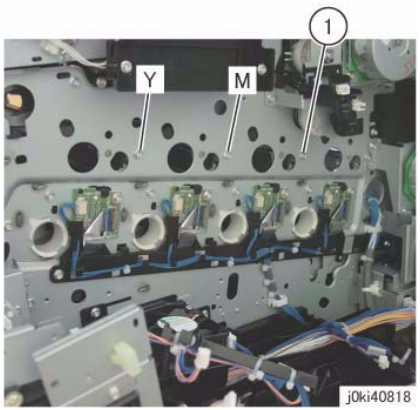

Figure 11 Remove the screw

16. Remove the Erase Lamp Unit (C). (Figure 12)
    a. Disconnect the connector.
    b. Remove the screws (x2).
    c. Remove the Erase Lamp Unit (C).

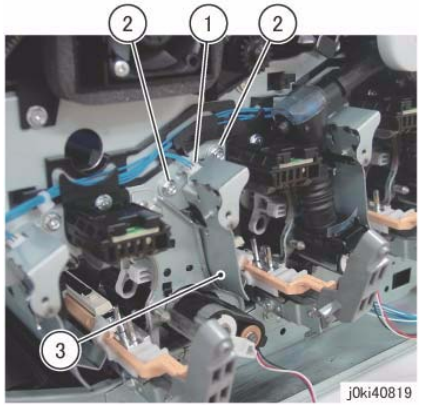

Figure 12 Remove the Erase Lamp Unit (C)

Replacement

1. To install, carry out the removal steps in reverse order.

   NOTE: *When cleaning the inner part of the Waste Toner Pipe Assembly, siphon the cleaner from the outlet at the Waste Box side. Rotating the gear indicated in the figure clockwise will result in the toner being ejected. (Figure 13)*

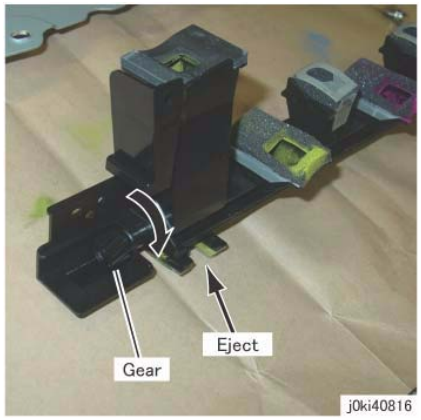

Figure 13 Siphon the cleaner from the outlet at the Waste Box side

NOTE: *After installing the Waste Toner Pipe Assembly, do not forget to open the shutters of the Dispenser Pipe (Y, M, C, K) and the Dev.eloper Housing Assembly (Y, M, C, K) that were closed in Step 8.*

REP 9.8 Agitator Motor Assembly

Parts List on PL 8.2

Removal

NOTE: *When turning the power OFF, turn OFF the Power Switch first and then the Main Power Switch.*

NOTE: *When removing the Drum, cover it with a black sheet, etc. to prevent light fatigue.*

NOTE: *Do not touch the Drum surface with your hands.*

1. Press the **Job Status** button to check that there are no jobs in progress.
2. Switch off the power and disconnect the power cord.
3. Disconnect all cables connected to the Control section on the right of the machine.
4. Remove the following parts:
   - Drum (Y, M, C, K) (REP 9.5)
   - Waste Box (PL 8.2)
   - Rear Lower Cover (REP 14.3)
   - Right Cover (PL 19.3)
   - HVPS (1st/2nd/DTC) (REP 1.1)
   - Remove the Drum/Dev. Drive Unit:
     - 7525/7530/7535 (REP 4.3)
     - 7545/7556 (REP 4.4)
5. Slide the GFI Chassis Assembly. (Figure 1)
   a. Release the wire harness from the clamp.
   b. Remove the screws (x4).
   c. Slide the GFI Chassis Assembly.

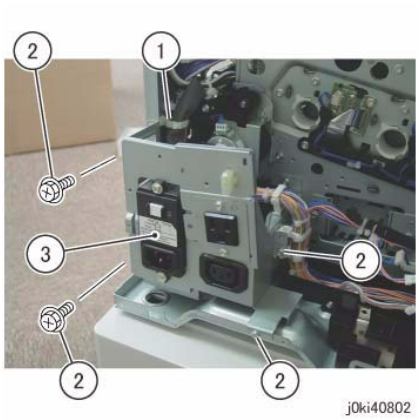

Figure 1 Slide the GFI Chassis Assembly

6. Remove the Harness Holder. (Figure 2)
   a. Disconnect the connectors (x2).
   b. Release the wire harness from the hook.
   c. Remove the cable band.
   d. Remove the screws (x2).
   e. Remove the Harness Holder.

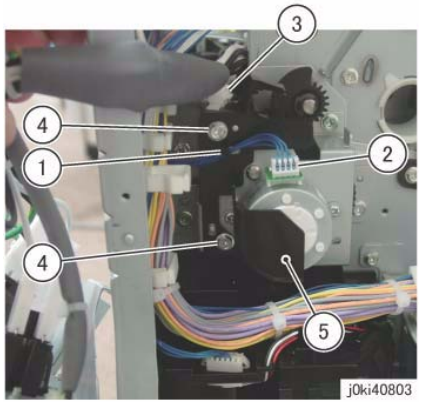

Figure 2 Remove the Harness Holder

7. Remove the gear and the bearing. (Figure 3)
   a. Remove the KL-Clip.
   b. Remove the gear.
   c. Remove the bearing.

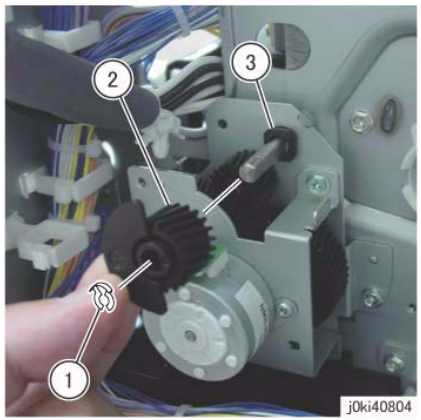

Figure 3 Remove the Gear and bearing

8. Remove the Agitator Motor Assembly. (Figure 4)
   a. Remove the screws (x2).
   b. Remove the Agitator Motor Assembly.

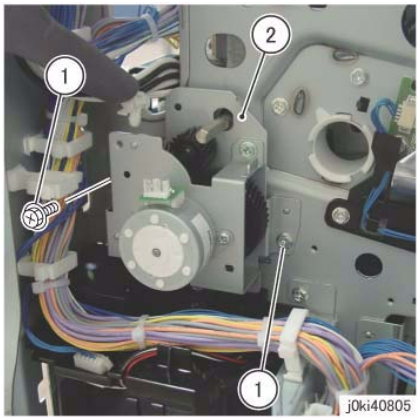

Figure 4 Remove the Agitator Motor Assembly

Replacement

1. To install, carry out the removal steps in reverse order.

REP 9.9 2nd BTR Assembly

Parts List on PL 14.2

Removal

NOTE: *When turning the power OFF, turn OFF the Power Switch first and then the Main Power Switch.*

NOTE: *Do not touch the 2nd BTR Roll surface with your hands.*

1. Press the **Job Status** button to check that there are no jobs in progress.
2. Switch off the power and disconnect the power cord.
3. Open the L/H Cover Unit.
4. Remove the 2nd BTR Assembly. (Figure 1)
   a. Remove the Tapping Screw.
   b. Press the Lever in the direction of the arrow.
   c. Remove the 2nd BTR Assembly.

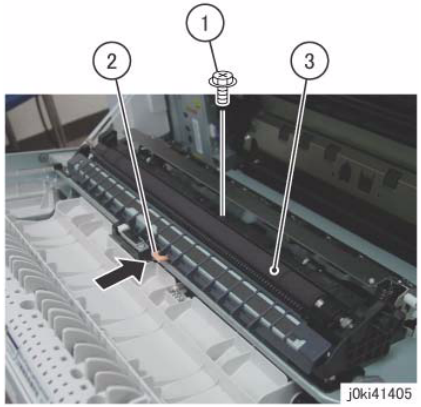

Figure 1 Remove the 2nd BTR Assembly

Replacement

1. To install, carry out the removal steps in reverse order.
2. After a replacement, enter the Diag Mode and use "Initialize HFSI Counter" to clear the HFSI counter.
   - "Chain Link: 954-821"

REP 9.10 LED Print Head Assembly (Y, M, C, K)

Parts List on PL 2.1

Removal

NOTE: *When turning the power OFF, turn OFF the Power Switch first and then the Main Power Switch.*

NOTE: *Because the removal procedure for the LPH Units (Y, M, C, and K) are the same, the following describes only the procedure for the LPH Unit (K).*

NOTE: *When removing the Drum, cover it with a black sheet, etc. to prevent light fatigue.*

NOTE: *Do not touch the Drum surface with your hands.*

NOTE: *Place paper under the Dev.eloper Housing Assembly (Y, M, C, K) and on the floor so that the toner, etc. do not dirty the floor and the machine during servicing.*

1. Press the **Job Status** button to check that there are no jobs in progress.
2. Switch off the power and disconnect the power cord.
3. Remove the following parts:
   - Drum (Y, M, C, K) (REP 9.5)
   - Toner Cartridge (Y, M, C, K) (PL 5.1)
   - Waste Box (PL 8.2)
   - Transfer Belt Cleaner Assembly (REP 9.1)
   - Tension Lever (PL 6.1)
4. Remove the Dev.eloper Housing Assembly (K). (REP 9.14)
5. Remove the LPH Unit (K). (Figure 1)
   a. Remove the screw.
   b. Remove the LPH Unit (K).

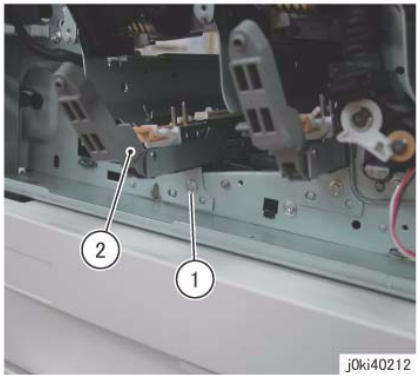

Figure 1 Remove the LPH Unit (K)

Replacement

1. To install, carry out the removal steps in reverse order.

REP 9.11 LPH Cable Assembly (7525/30/35)

Parts List on PL 2.2

Removal

NOTE: *When turning the power OFF, turn OFF the Power Switch first and then the Main Power Switch.*

NOTE: *When removing the Drum, cover it with a black sheet, etc. to prevent light fatigue.*

NOTE: *Do not touch the Drum surface with your hands.*

1. Press the **Job Status** button to check that there are no jobs in progress.
2. Switch off the power and disconnect the power cord.
3. Disconnect all cables connected to the Control section on the right of the machine.
4. Remove the following parts:
   - Drum (Y, M, C, K) (REP 9.5)
   - Rear Lower Cover (REP 14.3)
   - Left Rear Upper Cover (PL 19.2)
5. Disconnect the LPH Cables (x4) from the MCU PWB. (Figure 1)
   a. Disconnect the LPH Cables (x2).
   b. Disconnect the LPH Cables (x2).
   c. Release the LPH Cable from the cable holder.
   d. Release the LPH Cable from the cable holder.

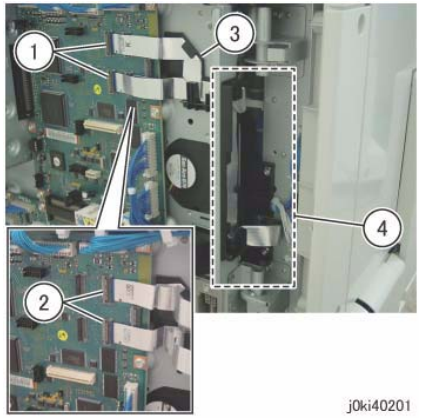

Figure 1 Disconnect the LPH Cables

6. Remove the HVPS (06A2). (REP 1.1)
7. Remove the Drum/Dev. Drive Unit:
   - 7525/7530/7535 (REP 4.3)
   - 7545/7556 (REP 4.4)
8. Release the wire harness from the Harness Holder. (Figure 2)
   a. Disconnect the connectors (x4).
   b. Release the wire harness from the Harness Holder.

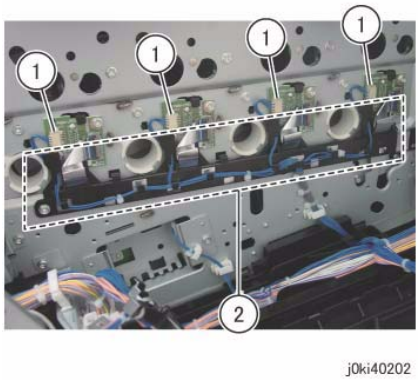

Figure 2 Release the wire harness

9. Remove the Takeaway Clutch. (Figure 3)
   a. Release the wire harness from the clamp.
   b. Disconnect the connector.
   c. Remove the screws (x2).
   d. Remove the Bracket and Takeaway Clutch.

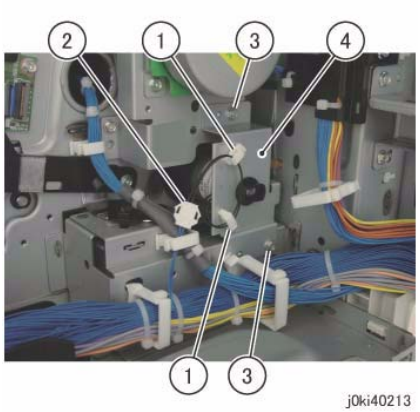

Figure 3 Remove the Takeaway Clutch

10. Remove the Cable Supports (x2). (Figure 4)
    a. Release the wire harness from the clamps (x2).
    b. Remove the Cable Support.
    c. Remove the Cable Support.

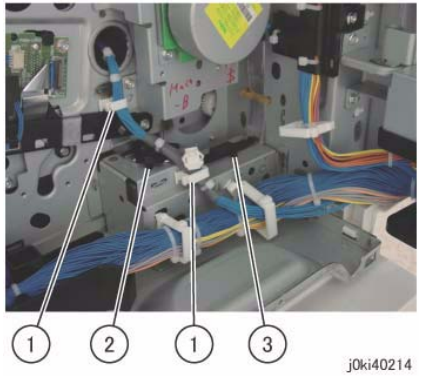

Figure 4 Remove the Cable Supports

11. Remove the Main Drive Assembly. (Figure 5)
    a. Disconnect the connector.
    b. Remove the screws (x4).
    c. Remove the Main Drive Assembly.

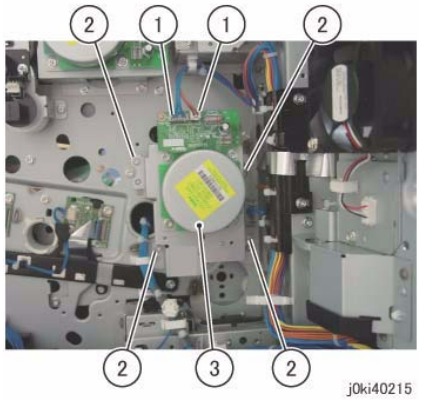

Figure 5 Remove the Main Drive Assembly

12. Release the LPH Cable. (Figure 6)
    a. Disconnect the connector.
    b. Release the LPH Cable from the clamps (x3).
    c. Release the LPH Cable from the cable holder.

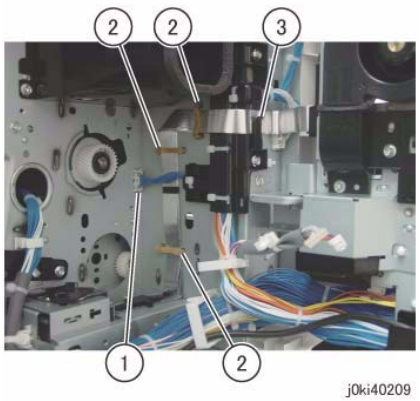

Figure 6 Release the LPH Cable

13. Remove the screws that secure the LPH Cable Assembly. (Figure 7)
    a. Disconnect the LPH Cables (x4).
    b. Remove the screws (x2).
    c. Remove the LPH Cable Assembly.

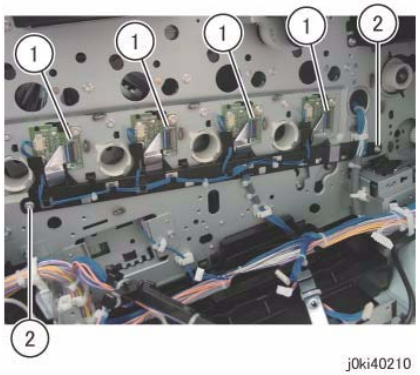

Figure 7 Remove the screws

14. Remove the LPH Cable Assembly. (Figure 8)
    a. Release the hooks (x2) and remove the LPH Cable Assembly in the direction of the arrow.

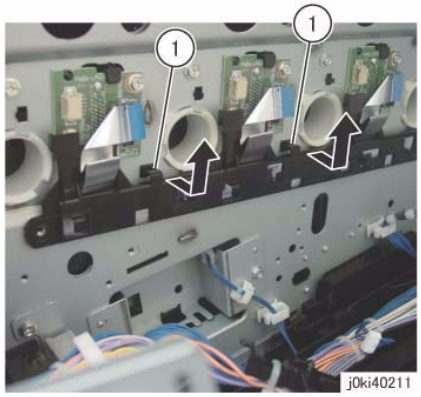

Figure 8 Remove the LPH Cable Assembly

Replacement

1. To install, carry out the removal steps in reverse order.
2. When installing the Takeaway Clutch, align the bosses (x4) of the bearing to the installation holes. (Figure 9)

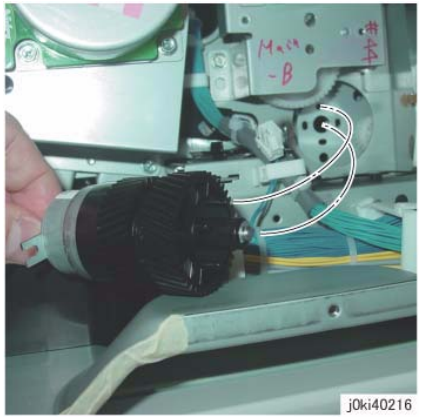

Figure 9 Install the Takeaway Clutch

3. When installing the Bracket, insert the Bracket into the tab of the Takeaway Clutch. (Figure 10)

Figure 10 Install the Bracket

REP 9.12 LPH Cable Assembly (7545/7556)

Parts List on PL 2.2

Removal

NOTE: *When turning the power OFF, turn OFF the Power Switch first and then the Main Power Switch.*

NOTE: *When removing the Drum, cover it with a black sheet, etc. to prevent light fatigue.*

NOTE: *Do not touch the Drum surface with your hands.*

1. Press the **Job Status** button to check that there are no jobs in progress.
2. Switch off the power and disconnect the power cord.
3. Disconnect all cables connected to the Control section on the right of the machine.
4. Remove the following parts:
   - Drum (Y, M, C, K) (REP 9.5)
   - Rear Lower Cover (REP 14.3)
   - Left Rear Upper Cover (PL 19.2)
5. Disconnect the LPH Cables (x4) from the MCU PWB. (Figure 1)
   a. Disconnect the LPH Cables (x2).
   b. Disconnect the LPH Cables (x2).
   c. Release the LPH Cable from the cable holder.
   d. Release the LPH Cable from the cable holder.

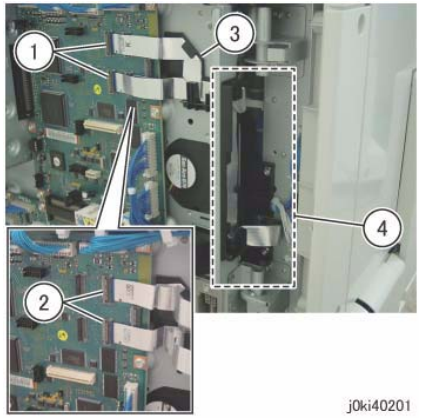

Figure 1 Disconnect the LPH Cables

6. Remove the HVPS (06A2). (REP 1.1)
7. Remove the Drum/Dev. Drive Unit:
   - 7525/7530/7535 (REP 4.3)
   - 7545/7556 (REP 4.4)
8. Release the wire harness from the Harness Holder. (Figure 2)
   a. Disconnect the connectors (x4).
   b. Release the wire harness from the Harness Holder.

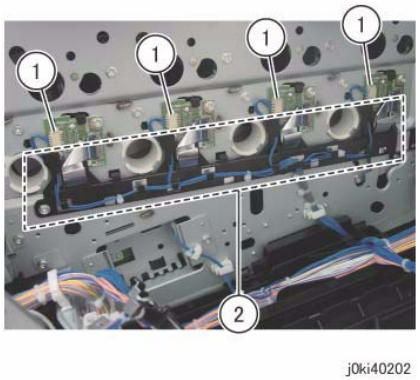

Figure 2 Release the wire harness

9. Remove the Takeaway Motor. (Figure 3)
   a. Disconnect the connector.
   b. Remove the cable band.
   c. Remove the screws (x3).
   d. Release the clamp.
   e. Move the wire harness in the direction of the arrow.
   f. Remove the screw.
   g. Remove the Takeaway Motor.

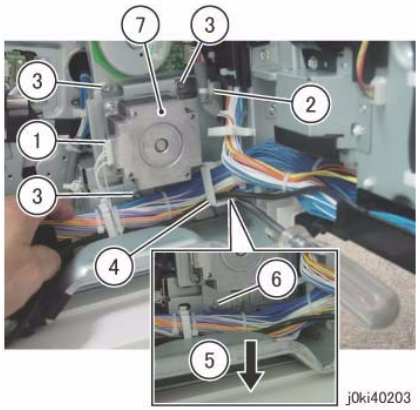

Figure 3 Remove the Takeaway Motor

10. Remove the gear and shaft. (Figure 4)
    a. Remove the gear and shaft.

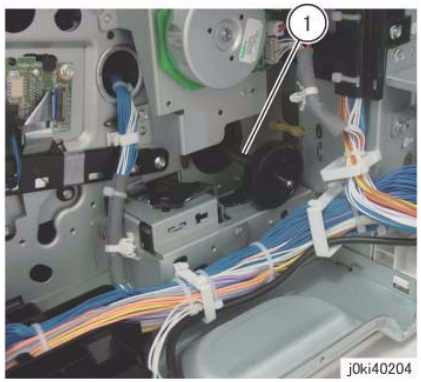

Figure 4 Remove the gear and shaft

11. Remove the Cable Supports (x2). (Figure 5)
    a. Remove the Cable Support.
    b. Remove the Cable Support.
    c. Release the wire harness from the clamp.
    d. Remove the cable band.

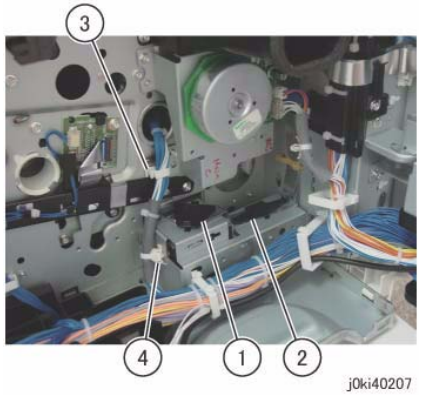

Figure 5 Remove the Cable Supports

12. Remove the Main Drive Assembly. (Figure 6)
    a. Disconnect the connectors (x2).
    b. Remove the screws (x4).
    c. Remove the Main Drive Assembly.

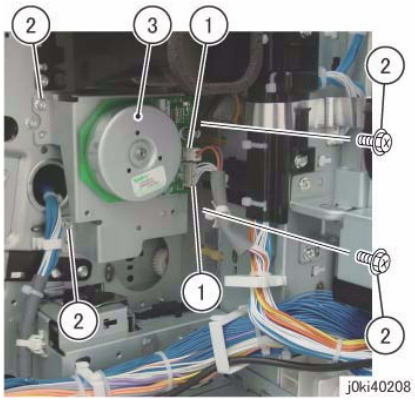

Figure 6 Remove the Main Drive Assembly

13. Release the LPH Cable. (Figure 7)
    a. Disconnect the connector.
    b. Release the LPH Cable from the clamps (x3).
    c. Release the LPH Cable from the cable holder.

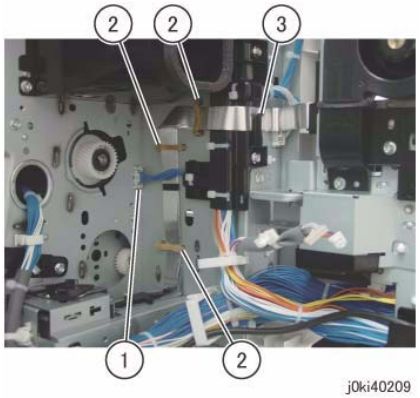

Figure 7 Release the LPH Cable

14. Remove the screws that secure the LPH Cable Assembly. (Figure 8)
    a. Disconnect the LPH Cables (x4).
    b. Remove the screws (x2).

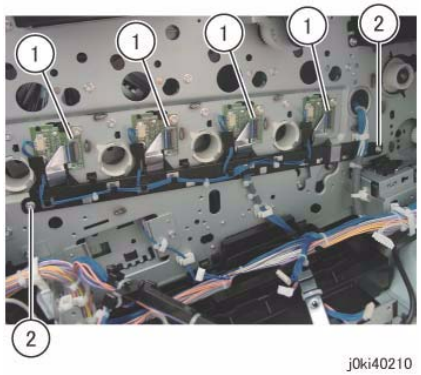

Figure 8 Remove the screws

15. Remove the LPH Cable Assembly. (Figure 9)
    a. Release the hooks (x2) and remove the LPH Cable Assembly in the direction of the arrow.

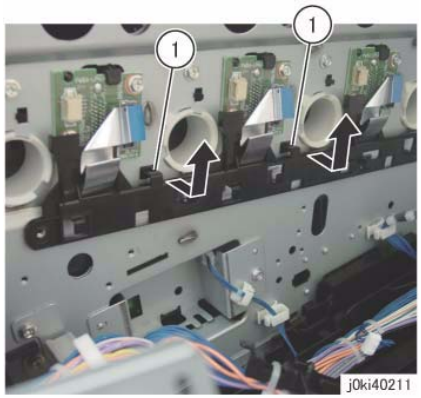

Figure 9 Remove the LPH Cable Assembly

Replacement

1. To install, carry out the removal steps in reverse order.
2. When installing the gear and shaft, align the bosses (x4) of the bearing to the installation holes. (Figure 10)

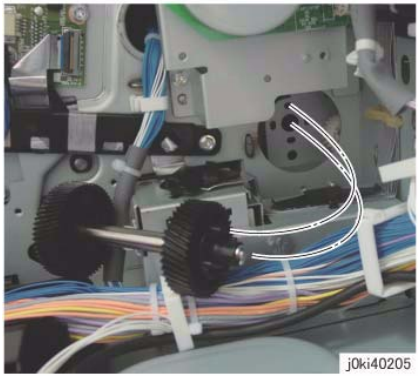

Figure 10 Install the gear and shaft

3. When installing the Takeaway Motor, align the shaft to the hole of the bearing. (Figure 11)

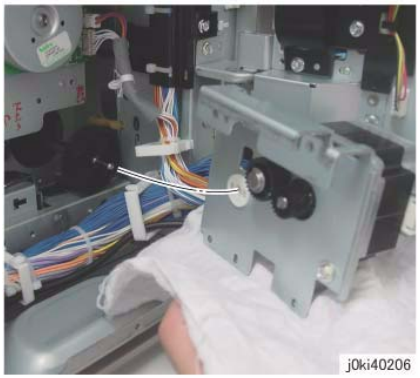

Figure 11 Install the Takeaway Motor

REP 9.13 Toner Dispense Motor Assembly

Parts List on PL 5.1

Removal

NOTE: *When turning the power OFF, turn OFF the Power Switch first and then the Main Power Switch.*

NOTE: *When removing the Drum, cover it with a black sheet, etc. to prevent light fatigue.*

NOTE: *Do not touch the Drum surface with your hands.*

1. Press the **Job Status** button to check that there are no jobs in progress.
2. Switch off the power and disconnect the power cord.
3. Remove the following parts:
   - Drum (Y, M, C, K) (REP 9.5)
   - Toner Cartridge (Y, M, C, K) (PL 5.1)
   - Waste Box (PL 8.2)
   - Transfer Belt Cleaner Assembly (REP 9.1)
   - Tension Lever (PL 6.1)
4. Remove the Drum Cover. (Figure 1)
   a. Remove the screws (x2).
   b. Open the Drum Cover.
   c. Remove the Drum Cover.

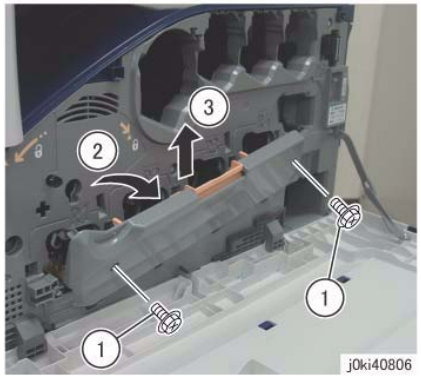

Figure 1 Remove the Drum Cover

5. Open the L/H Cover Unit.
6. Remove the Front Cover together with the Inner Cover. (Figure 2)
   a. Remove the screws (x6).
   b. Remove the Front Cover together with the Inner Cover.

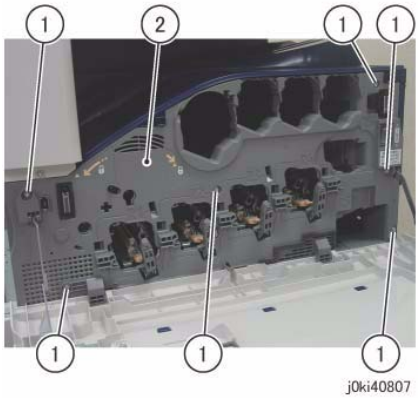

Figure 2 Remove the Front and Inner Covers together

7. Remove the Top Rear Cover. (PL 19.2)
8. Remove the Top Cover. (REP 14.2)
9. Remove the Rear Lower Cover. (REP 14.3)
10. Open the PWB Chassis Unit. (REP 14.4)
11. Remove the HVPS (1st/2nd/DTC). (REP 1.1)
12. Disconnect the connectors (x4). (Figure 3)
    a. Release the clamps (x4) of the wire harness.
    b. Disconnect the connectors (x4).

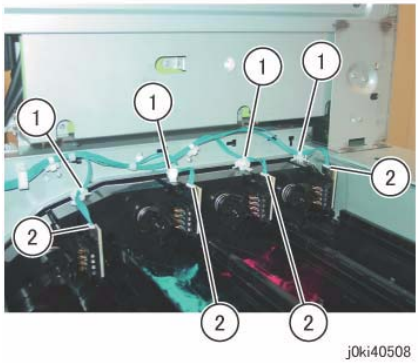

Figure 3 Disconnect the connectors

13. Remove the Conductor Housing Assembly. (Figure 4)
    a. Remove the screws (x3).
    b. Remove the Conductor Housing Assembly.

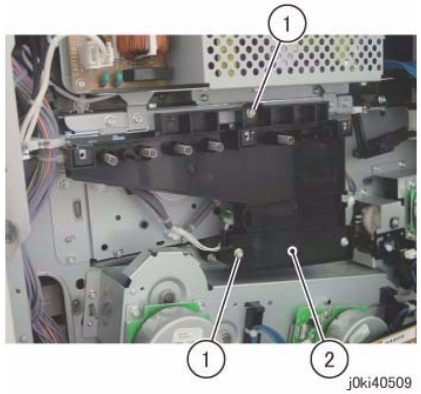

Figure 4 Remove the Conductor Housing Assembly

14. Disconnect the connectors (x4). (Figure 5)
    a. Remove the cable bands (x4).
    b. Release the wire harness from the clamp.
    c. Disconnect the connectors (x4).

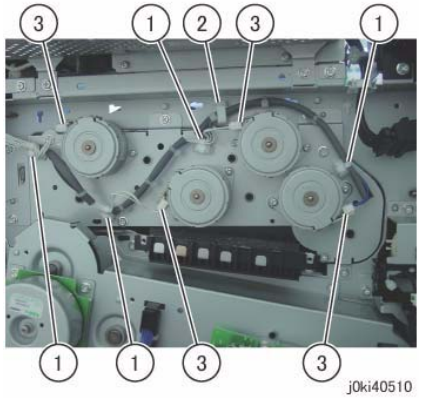

Figure 5 Disconnect the connectors

15. Remove the Toner Dispense Motor Assembly. (Figure 6)
    a. Remove the screws (x5).
    b. Remove the Toner Dispense Motor Assembly.

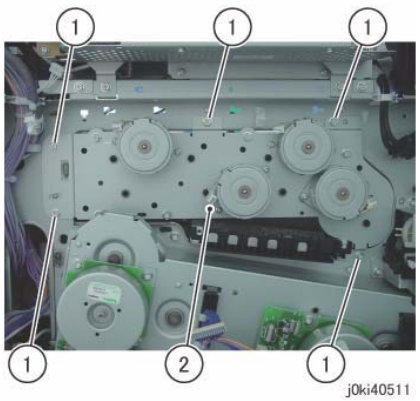

Figure 6 Remove the Toner Dispense Motor Assembly

Replacement

1. To install, carry out the removal steps in reverse order.

   NOTE: *If any of the Toner Dispense Motors (Y, M, C, K) was removed, align the connector sections to the arrows when installing. (Figure 7)*

Figure 7 Align the connector sections to the arrows

REP 9.14 Developer Housing Assembly (Y, M, C, K)

Parts List on PL 5.2

Removal

NOTE: *When turning the power OFF, turn OFF the Power Switch first and then the Main Power Switch.*

NOTE: *Because the removal procedure for the Dev.eloper Housing Assemblies (Y, M, C, and K) is the same, the following describes only the procedure for the Dev.eloper Housing Assembly (K).*

NOTE: *When removing the Dev. Housing, pay attention to the following:*

- *Foreign substances in the Dev. Housing.*
- *Foreign substances on the surface of the Dev. Housing, especially on the Dev.eloper Material Roll and Lower Seal.*
- *Toner sticking to the gear of the Dev.eloper Housing Assembly.*
- *Toner sticking to the MOB ADC Assembly.*

NOTE: *When removing the Drum, cover it with a black sheet, etc. to prevent light fatigue.*

NOTE: *Do not touch the Drum surface with your hands.*

NOTE: *Place paper under the Dispenser Assembly (Y, M, C, K) and on the floor so that the toner, etc. do not dirty the floor and the machine during servicing.*

1. Press the **Job Status** button to check that there are no jobs in progress.
2. Switch off the power and disconnect the power cord.
3. Remove the following parts:
   - Drum (Y, M, C, K) (REP 9.5)
   - Toner Cartridge (Y, M, C, K) (PL 5.1)
   - Waste Box (PL 8.2)
   - Transfer Belt Cleaner Assembly (REP 9.1)
   - Tension Lever (PL 6.1)
4. Remove the Drum Cover. (Figure 1)
   a. Remove the screws (x2).
   b. Open the Drum Cover.
   c. Remove the Drum Cover.

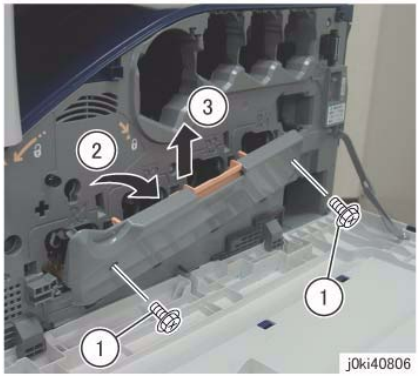

Figure 1 Remove the Drum Cover

5. Open the L/H Cover Unit.
6. Remove the Front Cover together with the Inner Cover. (Figure 2)
   a. Remove the screws (x6).
   b. Remove the Front Cover together with the Inner Cover.

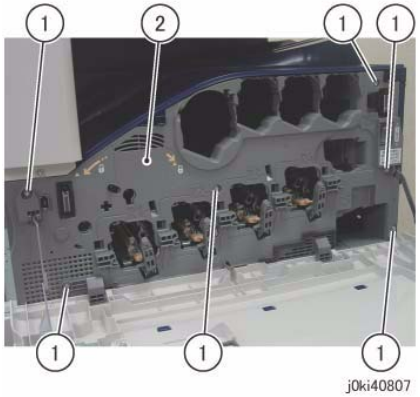

Figure 2 Remove the Front and Inner Covers together

7. [7545/56]:
   Remove the Process 1 Fan and Duct. (Figure 3)
   a. Disconnect the connector.
   b. Remove the screw.
   c. Remove the Process 1 Fan and Duct.
   d. Remove the cable band.

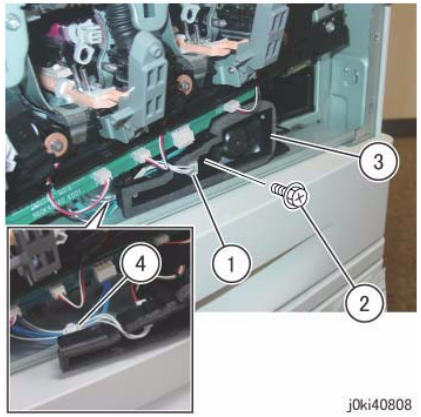

Figure 3 Remove the Process 1 Fan and Duct

8. Disconnect the connectors of the ATC PWB Assembly. (Figure 4)
   a. Release the wire harness from the hooks (x4).
   b. Disconnect the connectors (x5).

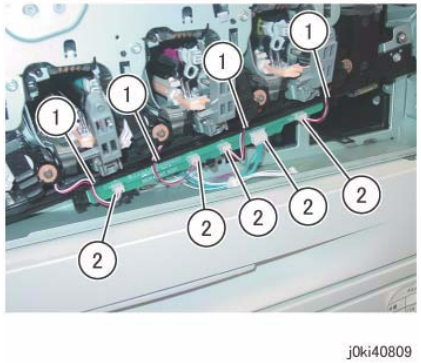

Figure 4 Disconnect the connectors

9. Remove the ATC PWB Assembly. (Figure 5)
   a. Remove the screws (x2).
   b. Remove the ATC PWB Assembly.

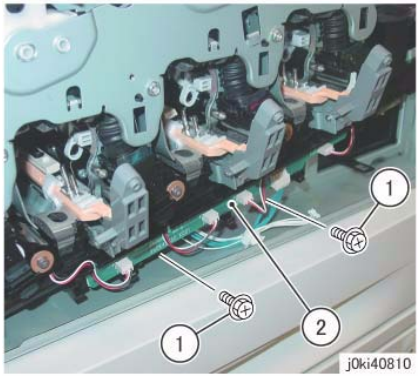

Figure 5 Remove the ATC PWB Assembly

10. Close the shutters of the Dispenser Pipe (Y, M, C, K) and the Dev.eloper Housing Assembly
    (Y, M, C, K). (Figure 6)
    a. Close the shutter.
    b. Turn the Lever counterclockwise and close the shutter.

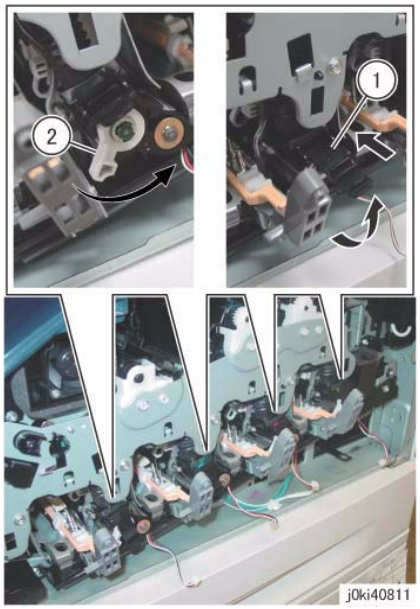

Figure 6 Close the shutters (Y,M,C,K)

11. Remove the Waste Toner Pipe Assembly. (Figure 7)
    a. Remove the screws (x3).
    b. Remove the Waste Toner Pipe Assembly.

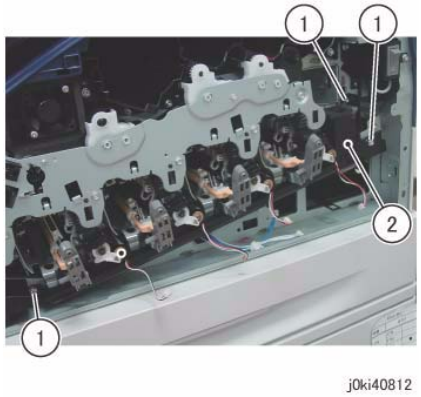

Figure 7 Remove the Waste Toner Pipe Assembly

NOTE: *Make sure that the shutter at the Waste Box side of the Waste Toner Pipe Assembly is closed. Also make sure that the shutter is closed when installing. (Figure 8)*

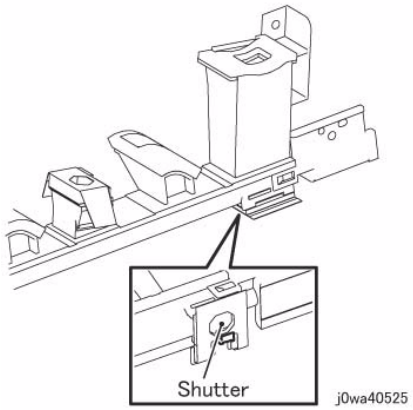

Figure 8 Make sure the shutter is closed during Removal/Install

12. Remove the Plate. (Figure 9)
    a. Remove the screws (x6).
    b. Remove the Plate.

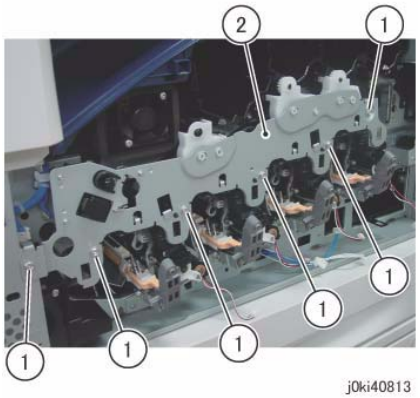

Figure 9 Remove the Plate

13. Slide the Dispenser Pipe (K). (Figure 10)
    a. Pull the joint section between the Dispenser Pipe (K) and the Dev.eloper Housing Assembly (K) in the direction of the arrow.
    b. Open the Dispenser Pipe (K) upwards.

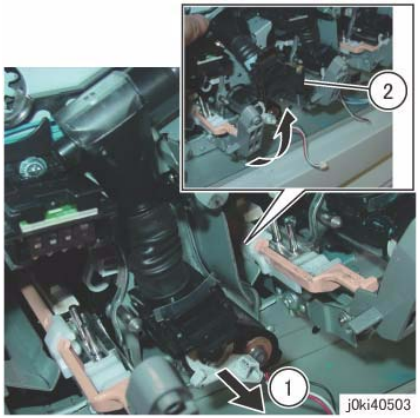

Figure 10 Slide the Dispenser Pipe (K)

14. Remove the Dev. Plate Assembly. (Figure 11)
    a. Remove the screws (x2).
    b. Remove the Dev. Plate Assembly.

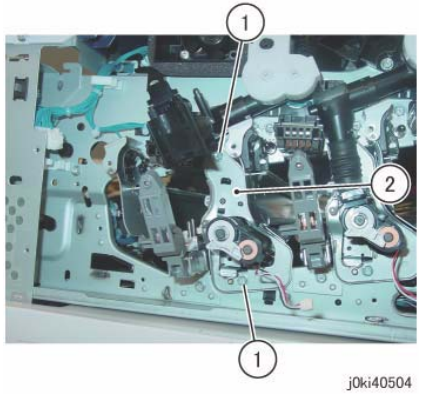

Figure 11 Remove the Dev. Plate Assembly

15. Remove the Dev.eloper Housing Assembly (K). (Figure 12)
    a. Remove the Dev.eloper Housing Assembly (K).

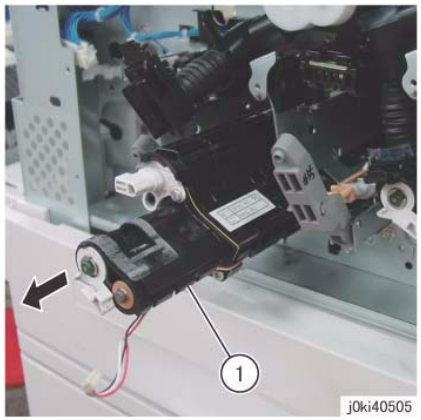

Figure 12 Remove the Dev.eloper Housing Assembly (K)

Replacement

1. To install, carry out the removal steps in reverse order.

NOTE: *When cleaning the inner part of the Waste Toner Pipe Assembly, siphon the cleaner from the outlet at the Waste Box side. Rotating the gear indicated in the figure clockwise will result in the toner being ejected. (Figure 13)*

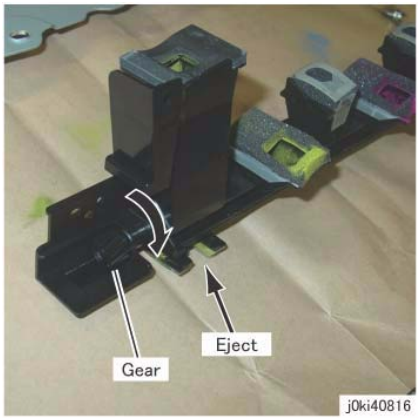

Figure 13 Siphon the cleaner from the outlet at the Waste Box side

NOTE: *If there is toner stuck to the MOB ADC Assembly, it has to be cleaned.*

NOTE: *Before installing the Dev.eloper Housing Assembly, check the locations on the Frame that are indicated in the following figure and clean it thoroughly if any toner, etc. are found to have gotten stuck there. (Figure 14)*

Figure 14 Check/clean before Installing the Dev.eloper Housing Assembly

NOTE: *If the Dev.eloper Housing Assembly is installed with toner stuck to the gears, it will cause banding of the gear, hastened wear and tear, and etc. (Figure 15)*

Figure 15 Check/clean Dev.eloper Housing Assembly gears

NOTE: *After installing the Waste Toner Pipe Assembly, do not forget to open the shutters of the Dispenser Pipe (Y, M, C, K) and the Dev.eloper Housing Assembly (Y, M, C, K) that were closed in Step 8.*

2. If it was replaced, supply the Dev.eloper Housing Assembly with new Dev.eloper. (REP 9.15)

   NOTE: *When replacing the Dev.eloper Housing Assembly, put the removed Dev.eloper Housing Assembly into the provided plastic bag without removing the Dev.eloper from it, and collect it back.*

3. After a replacement, enter the Diag Mode and use "Initialize HFSI Counter" to clear the HFSI counter.
   - "Chain Link: 954-830" (Y)
   - "Chain Link: 954-831" (M)
   - "Chain Link: 954-832" (C)
   - "Chain Link: 954-833" (K)
   - "Chain Link: 954-834" (Y)
   - "Chain Link: 954-835" (M)
   - "Chain Link: 954-836" (C)
   - "Chain Link: 954-837" (K)
4. Obtain the value of the ATC Sensor that is installed to the replaced Dev.eloper Housing Assembly and perform DC950 ATC Sensor Setup.
5. Perform DC949 ATCInitSet on the replaced Dev.eloper Housing Assembly.
6. Obtain the NVM values of the Dev.eloper Housing Assembly Replacement Target Color that is found on the inspection sheet that comes with the machine ("ATC Setup Coefficient", "ATC Setup Offset", "ATC_Barcode_No", and "deltaATC target Setup correction") and overwrite the values of the inspection sheet.

REP 9.15 Developer

Parts List on PL 5.2

Removal

NOTE: *When turning the power OFF, turn OFF the Power Switch first and then the Main Power Switch.*

NOTE: *When removing the Drum, cover it with a black sheet, etc. to prevent light fatigue.*

NOTE: *Do not touch the Drum surface with your hands.*

NOTE: *When replacing the Dev.eloper, spread paper on the floor in advance to keep the site clean.*

1. Press the **Job Status** button to check that there are no jobs in progress.
2. Switch off the power and disconnect the power cord.
3. Remove the following parts:
   - Drum (Y, M, C, K) (REP 9.5)
   - Toner Cartridge (Y, M, C, K) (PL 5.1)
   - Waste Box (PL 8.2)
   - Transfer Belt Cleaner Assembly (REP 9.1)
   - Tension Lever (PL 6.1)
   - Dev.eloper Housing Assembly (REP 9.14)
4. Remove the Upper Cover. (Figure 1)

Figure 1 Remove the Upper Cover

5. Remove the Triumph Plate. (Figure 2)

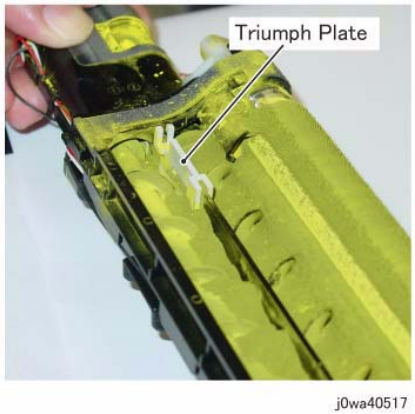

Figure 2 Remove the Triumph Plate

6. Put the Dev.eloper Housing Assembly into the plastic bag that comes bundled with the Dev.eloper and turn it upside down, then rotate the gear clockwise as shown in the figure to eject the Dev.eloper. (Figure 3)
   a. Turn the Dev.eloper Housing Assembly upside down.
   b. Rotate the gear in clockwise direction.

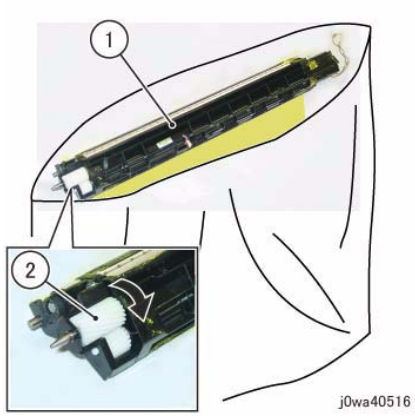

Figure 3 Put the Dev.eloper Housing Assembly in a plastic bag

7. Install the Triumph Plate. (Figure 4)

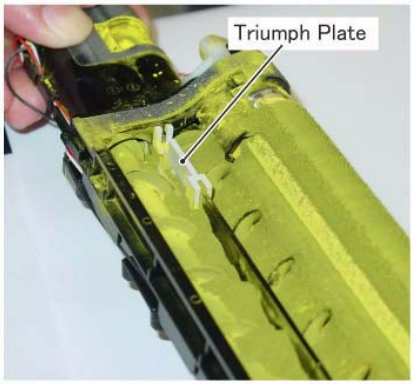

j0wa40517

Figure 4 Install the Triumph Plate

8. Hold the Dev.eloper Housing Assembly steady with your hand and supply the new Dev.eloper to the Mag Roll side. (Figure 5)

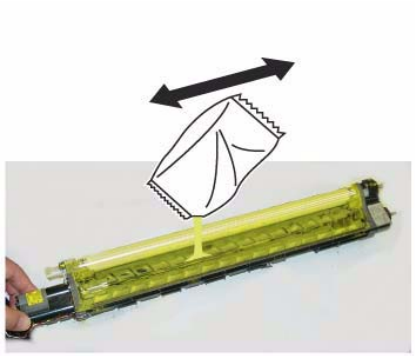

j0wa40518

Figure 5 Supply the new developer to the Mag Roll side

9. Rotate the gear indicated in the figure clockwise to even out the Dev.eloper on the Mag Roll.
   (Figure 6)
   a. Rotate the gear in clockwise direction.

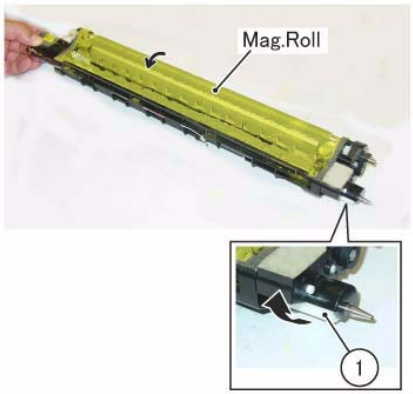

j0wa40519

Figure 6 Rotate the gear clockwise

NOTE: *After the Dev.eloper on the Mag Roll is evened out, take note of the following points.*

- *Make sure that the Dev.eloper does not go beyond the line that is approx. 3mm below the Upper Cover installation slot hole. (Figure 7)*

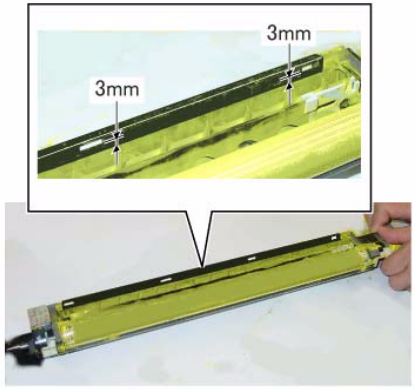

j0wa40520

Figure 7 Make sure the Dev.eloper does not go beyond the line

- *Make sure that no Dev.eloper or toner has gotten stuck to the locations shown in the figure. If there is any, clean it up by using dry cloth, etc. (Figure 8)*

j0wa40521

Figure 8 Make sure that no Dev.eloper or toner is stuck

10. Make sure that no Dev.eloper or toner has gotten stuck to the seal section indicated in the figure, on the Upper Cover that was removed in Step 2. If there is any, clean it up by using a vacuum cleaner or by gently using a dry cloth, etc. (Figure 9)

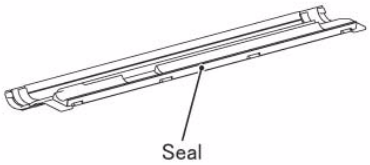

j0wa40522

Figure 9 Make sure that no Dev.eloper or toner is stuck to the seal

11. Reinstall the Upper Cover that was removed in Step 2.
12. Turn the Dev.eloper Housing Assembly upside down and check for the following.
    - Make sure that no Dev.eloper or toner has gotten stuck to the DRS Block locations indicated in the figure. If there is any, clean it up by using dry cloth, etc. (Figure 10)

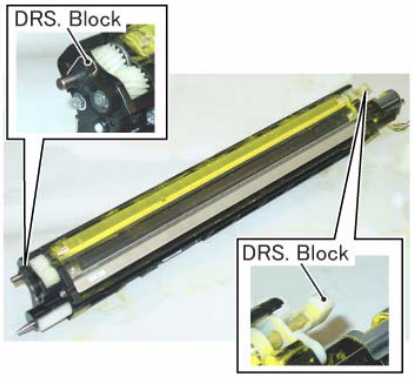

j0wa40523

Figure 10 Make sure that no Dev.eloper or toner is stuck to the DRS Block locations

- Make sure that no Dev.eloper or toner has gotten stuck to the gear locations indicated in the figure by turning the gear clockwise. If there is any, clean it up by using a vacuum cleaner or a brush, etc. (Figure 11)

j0wa40524

Figure 11 Make sure that no Dev.eloper or toner is stuck to the gears

Replacement

1. To install, carry out the removal steps in reverse order.
2. After a replacement, enter the Diag Mode and use "Initialize HFSI Counter" to clear the HFSI counter.
    - "Chain Link: 954-837" (K)
    - "Chain Link: 954-836" (C)
    - "Chain Link: 954-835" (M)
    - "Chain Link: 954-834" (Y)

REP 9.16 MOB ADC Assembly

Parts List on PL 18.5

Removal

NOTE: *When turning the power OFF, turn OFF the Power Switch first and then the Main Power Switch.*

NOTE: *When removing the Drum, cover it with a black sheet, etc. to prevent light fatigue.*

NOTE: *Do not touch the Drum surface with your hands.*

1. Press the **Job Status** button to check that there are no jobs in progress.
2. Switch off the power and disconnect the power cord.
3. Remove the following parts:
   - Drum (Y, M, C, K) (REP 9.5)
   - Toner Cartridge (Y, M, C, K) (PL 5.1)
   - Waste Box (PL 8.2)
   - Transfer Belt Cleaner Assembly (REP 9.1)
   - Tension Lever (PL 6.1)
4. Remove the Drum Cover. (Figure 1)
   a. Remove the screws (x2).
   b. Open the Drum Cover up to the position in Figure 1 .
   c. Remove the Drum Cover.

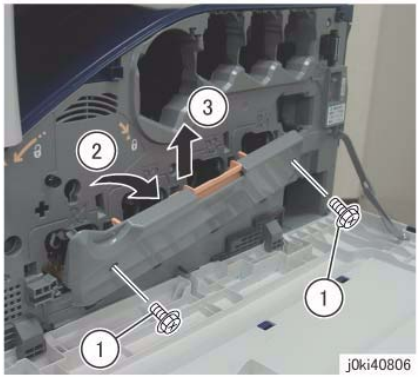

Figure 1 Remove the Drum Cover

5. Open the L/H Cover Unit.
6. Remove the Front Cover together with the Inner Cover. (Figure 2)
   a. Remove the screws (x6).
   b. Remove the Front Cover together with the Inner Cover.

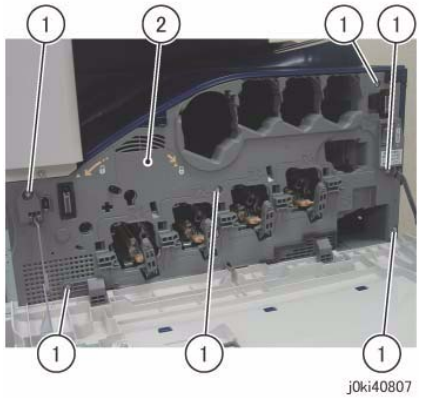

Figure 2 Open the L/H Cover

7. Remove the Plate. (Figure 3)
   a. Remove the screws (x6).
   b. Remove the Plate.

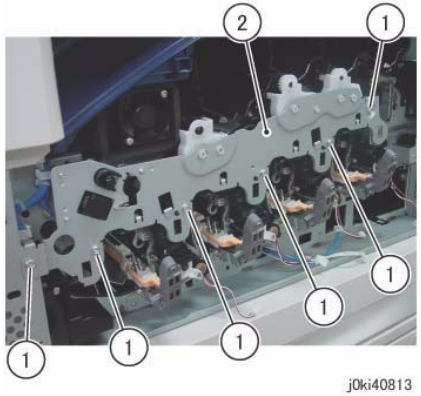

Figure 3 Remove the Plate

8. Remove the Plate. (7525/30/35: Figure 4) (7545/56: Figure 5)
   a. Release the hooks (x2) and remove the Plate.

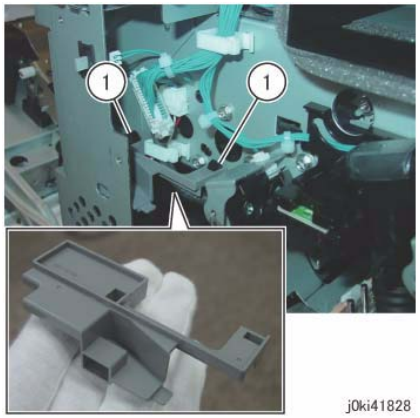

Figure 4 Release the Hooks and Remove the Plate

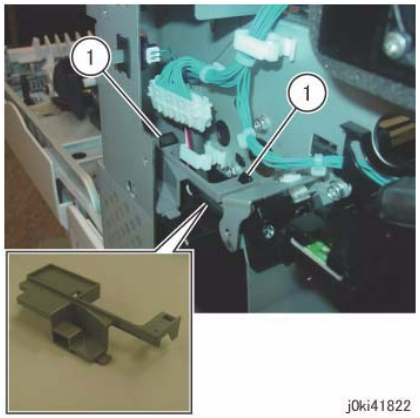

Figure 5 Release the Hooks and Remove the Plate

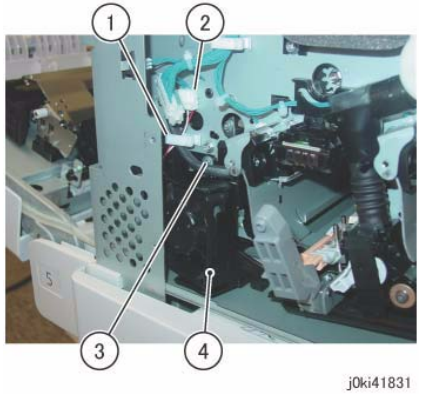

Figure 6 Remove the Process 2 Fan and Duct

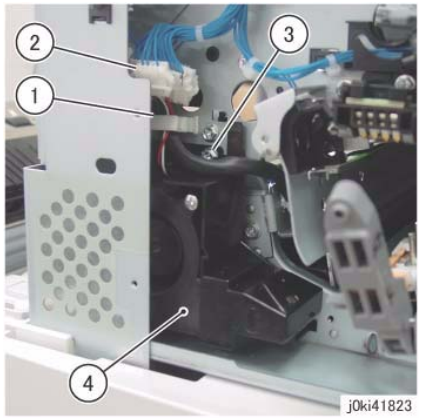

Figure 7 Remove the Process 2 Fan and Duct

9. Remove the Process 2 Fan and Duct. (7525/30/35: Figure 6) (7545/56: Figure 7)
   a. Release the wire harness from the clamp.
   b. Disconnect the connector.
   c. Remove the screw.
   d. Remove the Process 2 Fan and Duct.

10. [7525/30/35]:
    Remove the Plate. (Figure 8)
    a. Remove the Plate in the direction of the arrow.

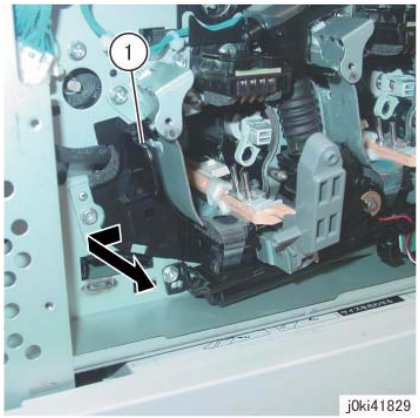

Figure 8 Remove the Plate

11. Disconnect the connector. (Figure 9)
    a. Disconnect the connector.

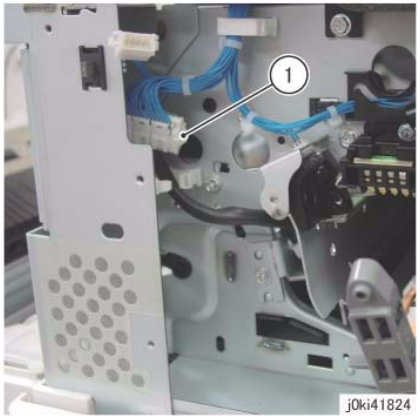

Figure 9 Disconnect the connectors

12. Remove the MOB ADC Assembly. (Figure 10)
    a. Remove the screw.
    b. Remove the MOB ADC Assembly.

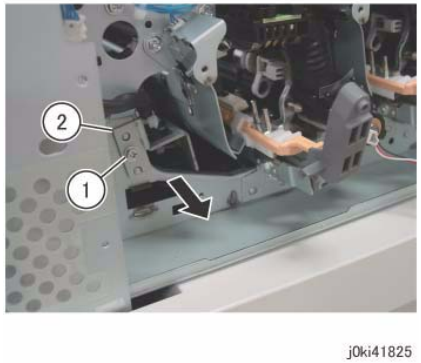

Figure 10 Remove the MOB ADC Assembly

Replacement

1. To install, carry out the removal steps in reverse order.

REP 10.1 Fuser

Parts List on PL 7.1

Removal

WARNING

Do not handle the fuser components until they have cooled. Some fuser components operate at hot temperatures and can produce serious personal injury if touched.

DANGER: Ne pas manipuler les éléments du four avant de les laisser refroidir. Certains éléments du four fonctionnent à des températures très élevées et peuvent causer de graves blessures s'ils sont touchés.

AVVERTENZA: Non maneggiare i componenti del fusore finché non sono raffreddati. Alcuni di questi componenti funzionano ad alte temperature e possono provocare gravi ferite se vengono toccati.

VORSICHT: Die Fixieranlage sollte erst gehandhabt werden, wenn diese genügend abgekühlt ist. Einige Teile der Fixieranlage erzeugen übermäßige Hitze und führen bei der Berührung zu schweren Verbrennungen.

AVISO: No manipule los componentes del fusor antes de que se enfríen. Algunos de los componentes del fusor funcionan a altas temperaturas y pueden ocasionar daños personales graves si se los toca.

NOTE: *When turning the power OFF, turn OFF the Power Switch first and then the Main Power Switch.*

1. Press the **Job Status** button to check that there are no jobs in progress.
2. Switch off the power and disconnect the power cord.
3. Open the L/H Cover Unit.
4. Remove the Fuser. (Figure 1)
   a. Loosen the Knob Screws (x2).
   b. Remove the Fuser.

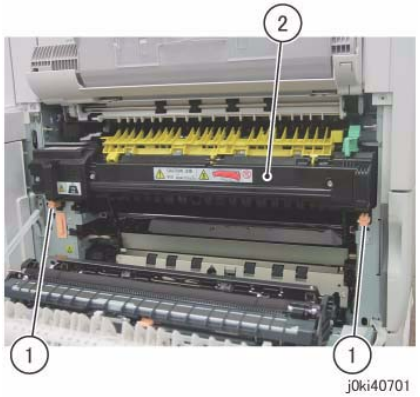

Figure 1 Remove the Fuser

Replacement

1. To install, carry out the removal steps in reverse order.
2. After a replacement, enter the Diag Mode and use "Initialize HFSI Counter" to clear the HFSI counter.
   - "Chain Link: 954-850"

REP 10.2 Duplex Assembly

Parts List on PL 14.2

Removal

NOTE: *When turning the power OFF, turn OFF the Power Switch first and then the Main Power Switch.*

NOTE: *Do not touch the 2nd BTR Roll surface with your hands.*

1. Press the **Job Status** button to check that there are no jobs in progress.
2. Switch off the power and disconnect the power cord.
3. Open the L/H Cover Unit.
4. Remove the chute. (Figure 1)
   a. Remove the screws (x4).
   b. Remove the Tapping Screws (x2).
   c. Remove the chute.

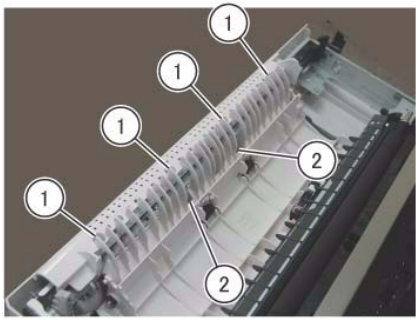

j0ki41406

Figure 1 Remove the Chute

5. Remove the L/H Cover. (Figure 2)
   a. Remove the Tapping Screws (x6).
   b. Remove the L/H Cover.

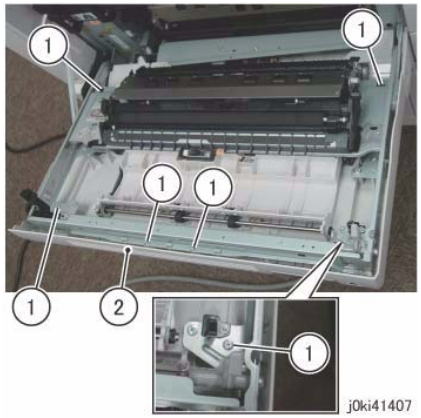

j0ki41407

Figure 2 Remove the L/H Cover

6. Disconnect the connector. (Figure 3)
   a. Release the wire harness from the clamp.
   b. Disconnect the connectors (x3).

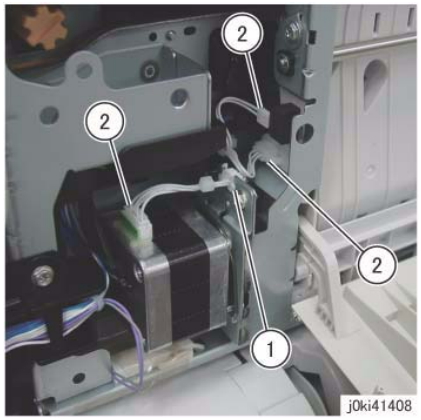

j0ki41408

Figure 3 Disconnect the connectors

7. Remove the Duplex Assembly. (Figure 4)
   a. Remove the screws (x3).
   b. Remove the Duplex Assembly.

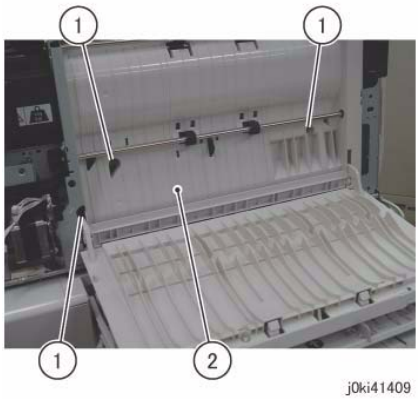

Figure 4 Remove the Duplex Assy

Replacement

1. To install, carry out the removal steps in reverse order.

REP 11.1 Exit/OCT 1 Assembly

Parts List on PL 17.1

Removal

NOTE: *When turning the power OFF, turn OFF the Power Switch first and then the Main Power Switch.*

1. Press the **Job Status** button to check that there are no jobs in progress.
2. Switch off the power and disconnect the power cord.
3. Remove the Exit 2 Assembly. (REP 11.2)
4. Remove the Motor Cover. (Figure 1)
   a. Release the wire harness from the hook.
   b. Disconnect the connector.
   c. Remove the Tapping Screw.
   d. Remove the Motor Cover.

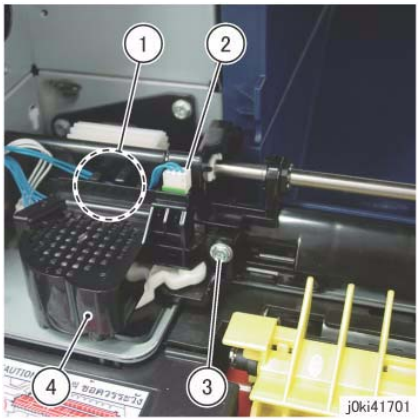

Figure 1 Remove the Motor Cover

5. Disconnect the connector. (Figure 2)
   a. Disconnect the connectors (x2).
   b. Slide and remove the Belt.
   c. Remove the screws (x2).

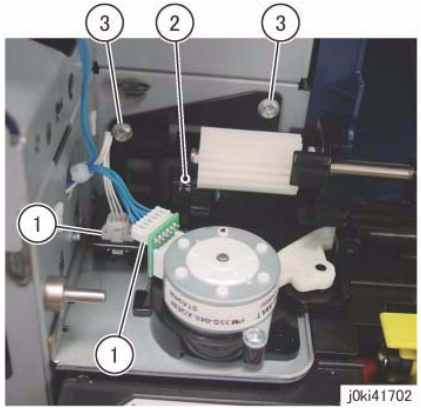

Figure 2 Disconnect the connectors

6. Remove the Exit/OCT 1 Assembly. (Figure 3)
   a. Slide the Bearing.
   b. Remove the Exit/OCT 1 Assembly.

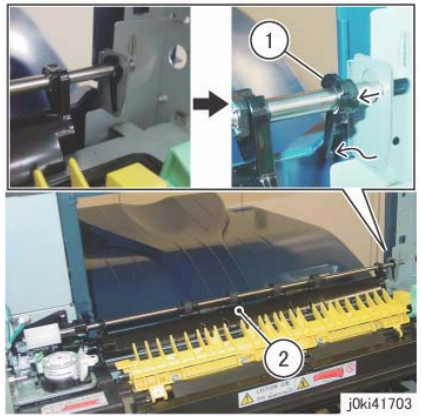

Figure 3 Remove the Exit/OCT 1 Assy

Replacement

1. To install, carry out the removal steps in reverse order.

REP 11.2 Exit 2 Assembly

Parts List on PL 17.1

Removal

NOTE: *When turning the power OFF, turn OFF the Power Switch first and then the Main Power Switch.*

1. Press the **Job Status** button to check that there are no jobs in progress.
2. Switch off the power and disconnect the power cord.
3. Open the L/H Cover Unit.
4. Remove the Front Left Cover. (PL 19.2)
5. Remove the Left Rear Upper Cover. (PL 19.2)
6. Remove the Paper Weight. (Figure 1)
   a. Release the hook and remove the Paper Weight.

Figure 1 Remove the Paper Weight

7. Remove the Exit 2 Assembly. (Figure 2)
   a. Disconnect the connector.
   b. Remove the screws (x4).
   c. Remove the Exit 2 Assembly.

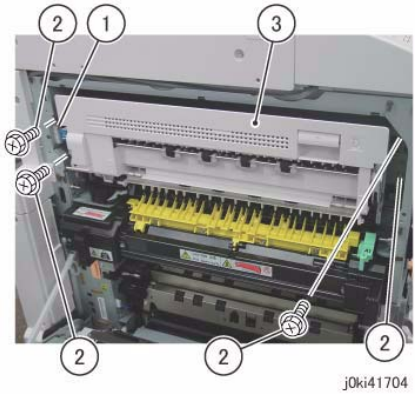

Figure 2 Remove the Exit 2 Assy

Replacement

1. To install, carry out the removal steps in reverse order.

REP 14.1 L/H Cover Unit

Parts List on PL 14.1

Removal

NOTE: *When turning the power OFF, turn OFF the Power Switch first and then the Main Power Switch.*

1. Press the **Job Status** button to check that there are no jobs in progress.
2. Switch off the power and disconnect the power cord.
3. Remove the Left Rear Lower Cover. (PL 19.2)
4. Open the L/H Cover Unit.
5. Disconnect the connector. (Figure 1)
   a. Release the wire harness from the clamps (x2).
   b. Disconnect the connector.
   c. Disconnect the connector.

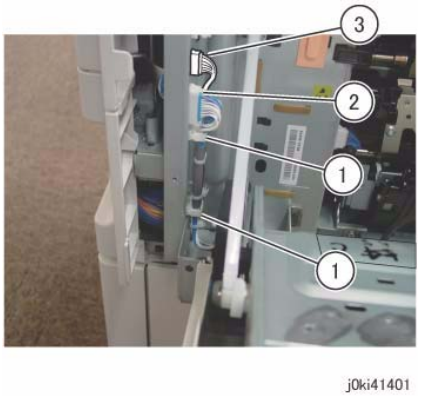

Figure 1 Disconnect the connectors

6. Rotate the Front Support 90 degree counterclockwise and remove it from hole of the Frame. (Figure 2)
   (A) Front Support

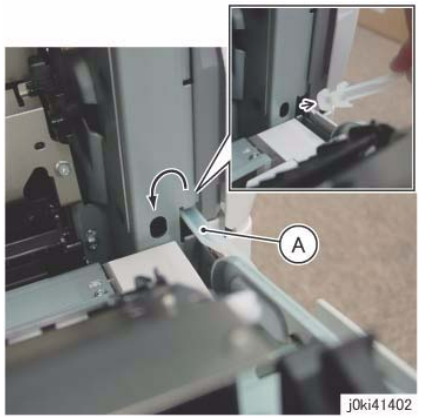

Figure 2 Rotate and Remove the Front Support

7. Remove the Rear Support from the L/H Cover Unit. (Figure 3)
   a. Remove the KL-Clip.
   b. Remove the Rear Support.

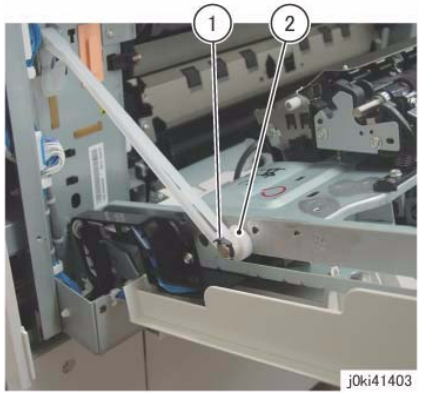

Figure 3 Remove the Rear Support

8. Remove the L/H Cover Unit. (Figure 4)
   a. Remove the L/H Cover Unit from the studs (x2) of the hinge.

Figure 4 Remove the L/H Cover

Replacement

1. To install, carry out the removal steps in reverse order.

REP 14.2 Top Cover

Parts List on PL 19.2

Removal

NOTE: *When turning the power OFF, turn OFF the Power Switch first and then the Main Power Switch.*

NOTE: *When removing the Drum, cover it with a black sheet, etc. to prevent light fatigue.*

NOTE: *Do not touch the Drum surface with your hands.*

1. Press the **Job Status** button to check that there are no jobs in progress.
2. Switch off the power and disconnect the power cord.
3. Remove the following parts:
   - Drum (Y, M, C, K) (REP 9.5)
   - Toner Cartridge (Y, M, C, K) (PL 5.1)
   - Waste Box (PL 8.2)
   - Transfer Belt Cleaner Assembly (REP 9.1)
   - Tension Lever (PL 6.1)
4. Remove the Drum Cover. (Figure 1)
   a. Remove the screws (x2).
   b. Open the Drum Cover up to the position in the figure.
   c. Remove the Drum Cover.

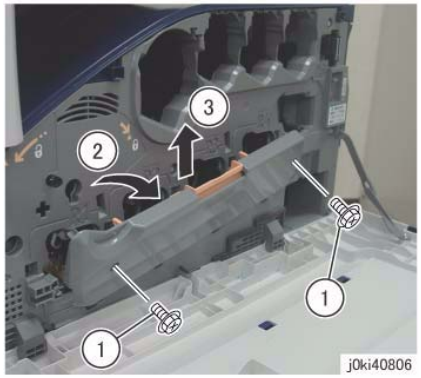

Figure 1 Remove the Drum Cover

5. Open the L/H Cover Unit.
6. Remove the Front Cover together with the Inner Cover. (Figure 2)
   a. Remove the screws (x6).
   b. Remove the Front Cover together with the Inner Cover.

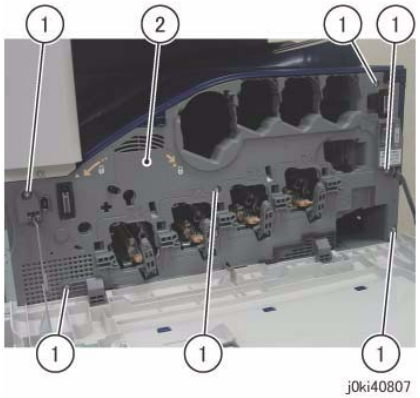

Figure 2 Remove the L/H Cover

7. Remove the Front Left Cover and the Exit Front Cover. (Figure 3)
   a. Remove the screw.
   b. Remove the Front Left Cover in the direction of the arrow.
   c. Remove the Exit Front Cover.

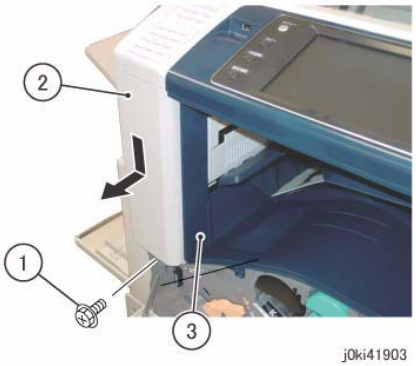

Figure 3 Remove the Front Left and Front Exit Covers

8. Remove the Paper Weight. (Figure 4)
   a. Release the hook and remove the Paper Weight.

Figure 4 Remove the Paper Weight

9. Remove the Top Cover. (Figure 5)
   a. Remove the screw.
   b. Remove the Top Cover.

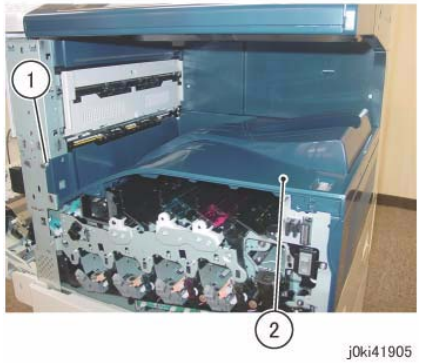

Figure 5 Remove the Top Cover

Replacement

1. To install, carry out the removal steps in reverse order.

REP 14.3 Rear Lower Cover

Parts List on PL 19.3

Removal

NOTE: *When turning the power OFF, turn OFF the Power Switch first and then the Main Power Switch.*

1. Press the **Job Status** button to check that there are no jobs in progress.
2. Switch off the power and disconnect the power cord.
3. Remove the following parts:
   - Filter Cover (PL 19.3)
   - Control Unit Connector Cover (PL 19.3)
   - Rear Upper Cover (PL 19.3)
   - MCU Cover (PL 19.3)
4. Disconnect the connector. (Figure 1)
   a. Disconnect the connector.

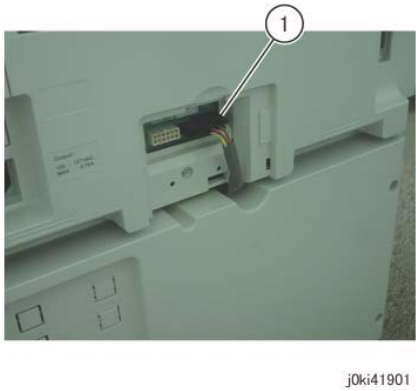

Figure 1 Disconnect the connectors

5. Remove the Rear Lower Cover. (Figure 2)
   a. Remove the screws (x3).
   b. Remove the Rear Lower Cover.

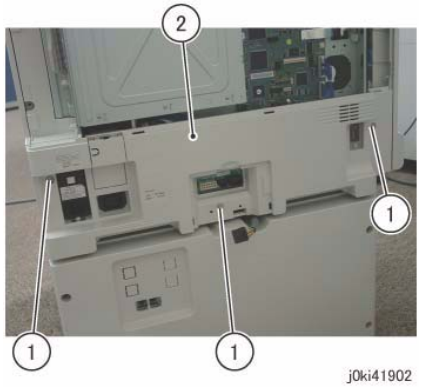

Figure 2 Remove the Rear Lower Cover

Replacement

1. To install, carry out the removal steps in reverse order.

REP 14.4 Opening/Closing the PWB Chassis Unit

Parts List on PL 18.1

Removal

NOTE: *When turning the power OFF, turn OFF the Power Switch first and then the Main Power Switch.*

1. Press the **Job Status** button to check that there are no jobs in progress.
2. Switch off the power and disconnect the power cord.
3. Remove the Control Unit Connector Cover. (PL 19.3)
4. Disconnect all cables connected to the Control Unit.
5. Remove the Rear Lower Cover. (REP 14.3)
6. Release the wire harness from the clamp. (Figure 1)
   a. Release the wire harness from the clamps (x2).

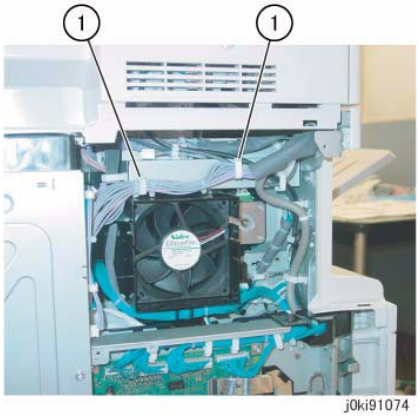

Figure 1 Release the Wire Harness

7. Remove the screws that secure the PWB Chassis Unit. (Figure 2)
   a. Remove the screws (x2).

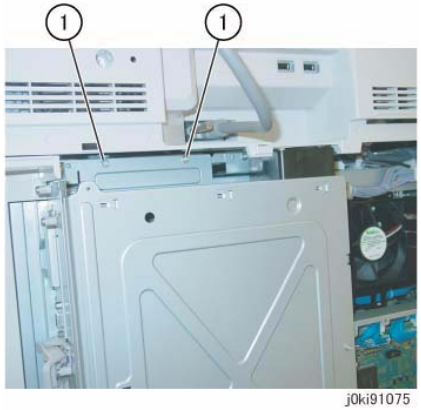

Figure 2 Remove the screws

8. Remove the screws that secure the PWB Chassis Unit. (Figure 3)
   a. Remove the screws (x3).

Figure 3 Remove the screws that secure the PWB Chassis

9. Open the PWB Chassis Unit. (Figure 4)
   a. Remove the screws (x3) and open the PWB Chassis Unit.

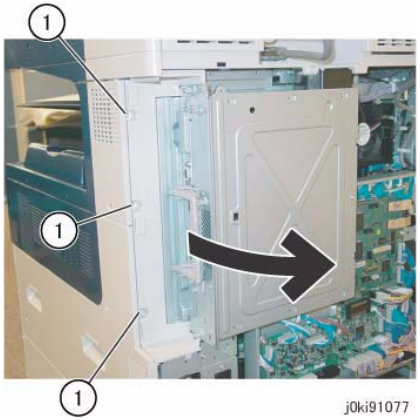

Figure 4 Open the PWB Chassis

Replacement

1. To install, carry out the removal steps in reverse order.

REP 19.1 HCF Tray 6

Parts List on PL 28.1

Removal

NOTE: *When turning the power OFF, turn the Power Switch OFF first, and then the Main Power Switch.*

1. Press the Job Status button to check that there are no jobs in progress.
2. Switch off the power and disconnect the power cord.
3. Open the HCF Tray by pulling the tray toward you.
4. Remove all paper from the tray.
5. Using a small screwdriver, or other small, blunt instrument, release the stopper on each rail of the tray by inserting the screwdriver into the hole of the stopper and pulling the tray toward you.
6. Remove the tray by pulling it toward you.

Replacement

1. Slide the rails (2) into the HCF housing.
2. Line up the rails of the tray with the adjoining rails of the HCF and push the tray into place.
3. Place previously removed paper, or fresh paper, into the tray.

REP 19.2 HCF Feeder

Parts List on PL 28.1

Removal

NOTE: *When turning the power OFF, turn the Power Switch OFF first, and then the Main Power Switch.*

1. Press the Job Status button to check that there are no jobs in progress.
2. Switch off the power and disconnect the power cord.
3. Remove the HCF Tray (REP 19.1).
4. Open the Feeder Top Cover.
5. Remove the (2) screws used to secure the HCF Feeder on its rail (Figure 1).

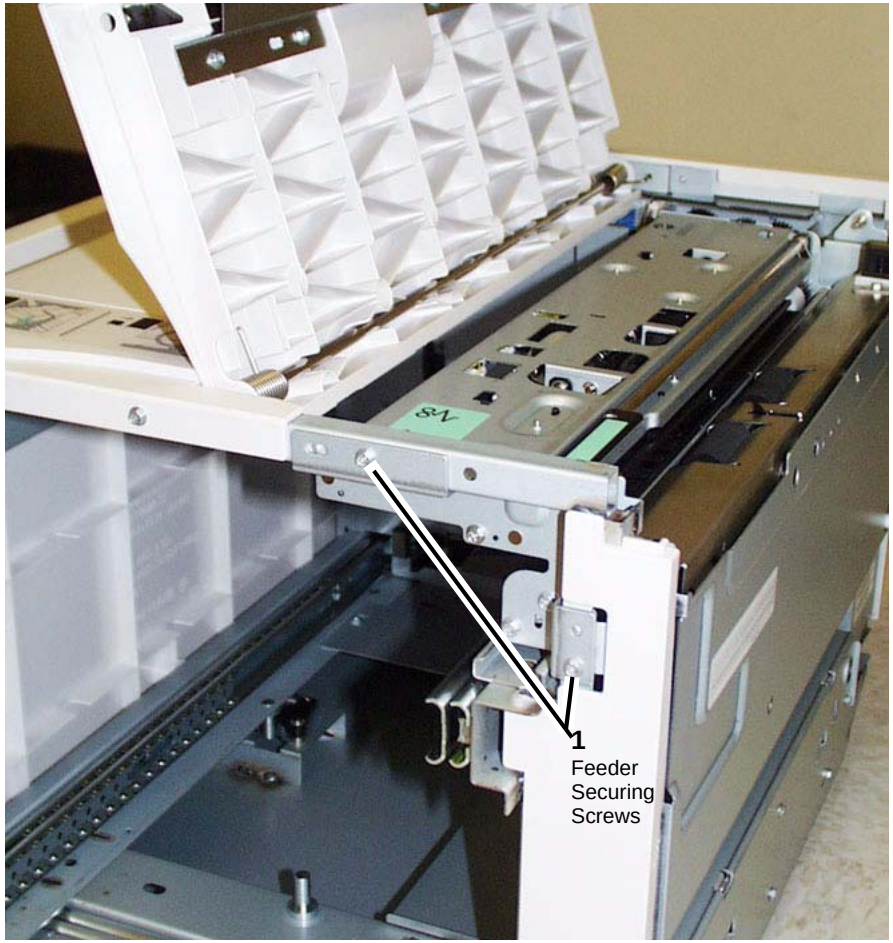

Figure 1 Feeder Securing Screws

6. Slide the HCF Feeder toward you.

Replacement

1. Position the HCF Feeder's bottom rail-following feet (2) onto the internal HCF rail.
2. Slide the HCF Feeder back into the HCF until it seats.

CAUTION

Do not over tighten the HCF Feeder screws.

3. Reinstall the two securing screws and tighten until snug.

REP 19.3 HCF Un-docking

Parts List on PL 28.8

Removal

NOTE: *When turning the power OFF, turn the Power Switch OFF first, and then the Main Power Switch.*

1. Press the Job Status button to check that there are no jobs in progress.
2. Switch off the power and disconnect the power cord.
3. Unplug the HCF Power Cable connected to the left rear of the copier/printer.
4. Grasping the HCF by its upper corners, pull the HCF away from the copier/printer to expose the HCF Docking Base (Figure 1).

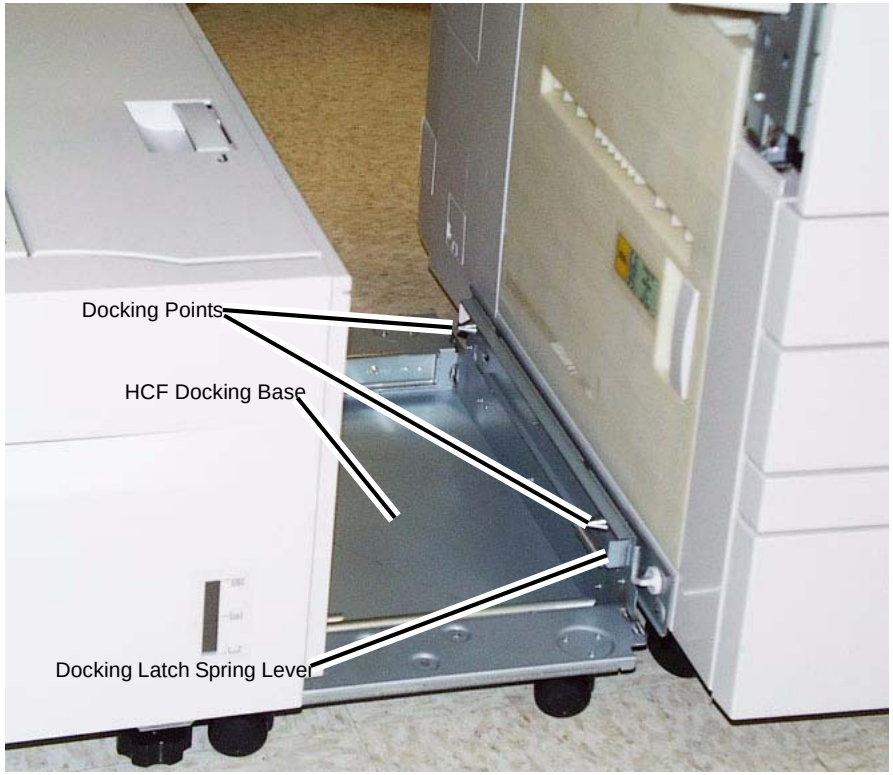

Figure 1 Exposing the docking base

5. Release the Docking Latch Spring Lever on the right side of the Docking Base.
6. Pull the HCF away from the copier/printer to un-dock it from the copier/printer.

Replacement

1. Push the HCF toward the two Docking Points on the left side of the printer.
2. Align the holes in the HCF Docking Base with the Docking Points on the printer/copier.

NOTE: *Rotate the Caster of the copier/printer so that it does not interfere with docking.*

3. Push the HCF into place.
4. Reattach the HCF Power Cable.

REP 19.4 HCF Tray Cables

Parts List on PL 28.3

Removal

NOTE: *When turning the power OFF, turn the Power Switch OFF first, and then the Main Power Switch.*

1. Press the Job Status button to check that there are no jobs in progress.
2. Switch off the power and disconnect the power cord.

Removing the HCF Rear Tray Cables

1. Remove the HCF Tray (REP 19.1)
2. Remove the Gear Bracket Assembly (Figure 1).

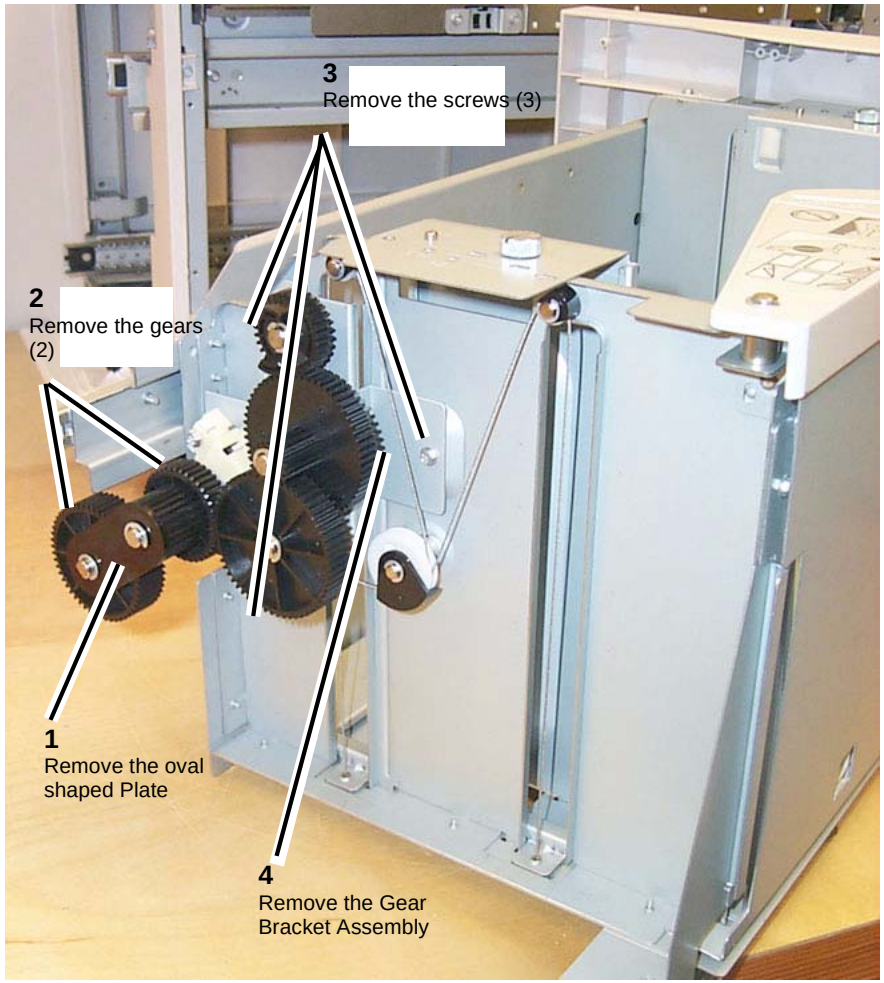

Figure 1 Gear Bracket Assembly

3. At the rear of the HCF Tray, begin to free up movement of the Tray Cable Pulley (Figure 2).

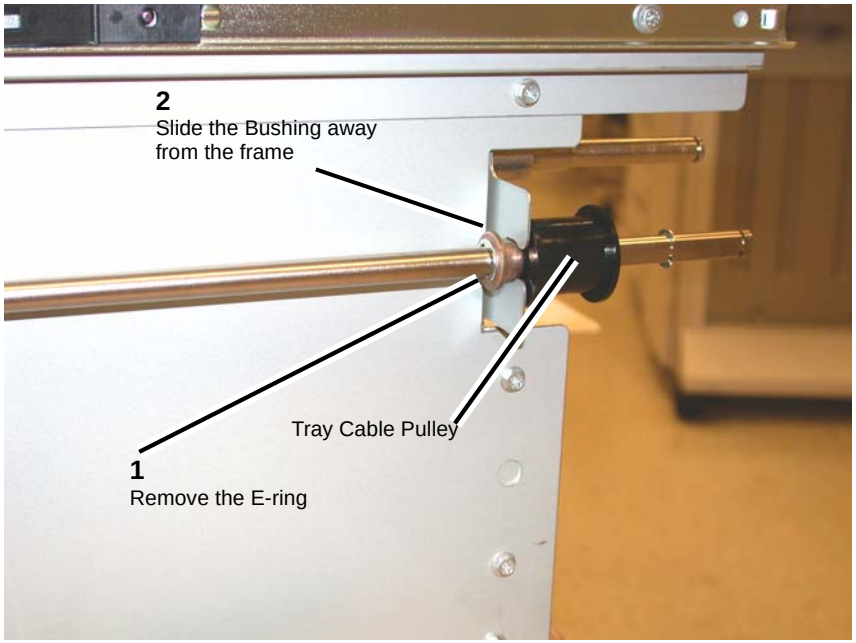

Figure 2 Lift Shaft Rear Tray Cable Pulley

NOTE: *You will not be able to release the cable ends from underneath the Tray Cable Pulley until you perform the next step, which puts slack in the cable enabling the Lift Shaft to be disengaged from its bracket, and the Tray Cable Pulley moved farther to the left releasing the cable ends.*

4. Prepare to remove the Rear Tray Cable (Figure 3).

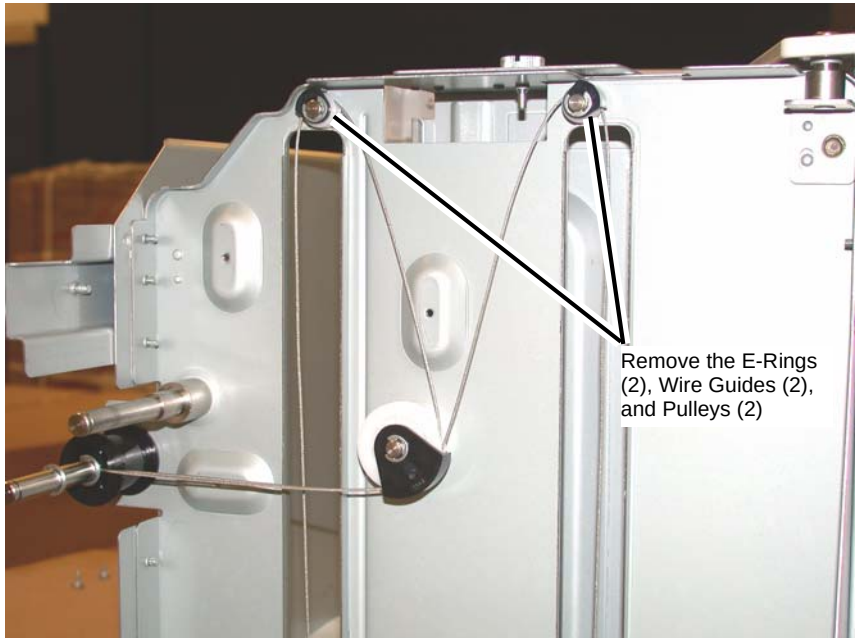

Figure 3 Preparing to remove the Rear Tray Cable

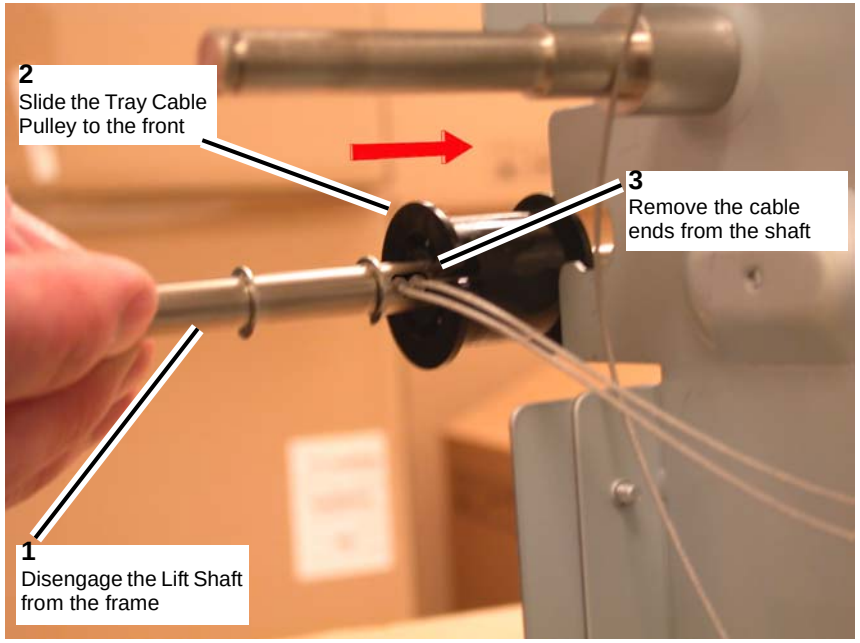

Figure 4 Releasing the Cable ends from the Lift Shaft

5. When both sections of the cable are slack, disengage the Lift Shaft from the frame and slide the Tray Cable Pulley to the front of the Lift Shaft to release the Rear Lift Cable ends that are trapped in the pocket underneath the Tray Cable Pulley (Figure 4).

6. Remove the Rear Tray Cable (Figure 5, Figure 6).

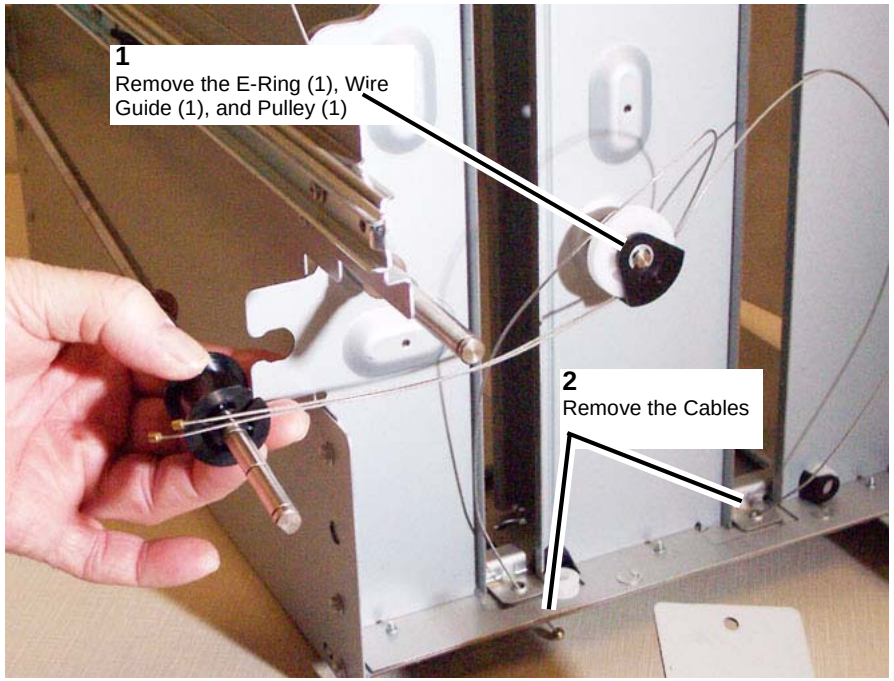

Figure 5 Removing the Rear Tray Cables

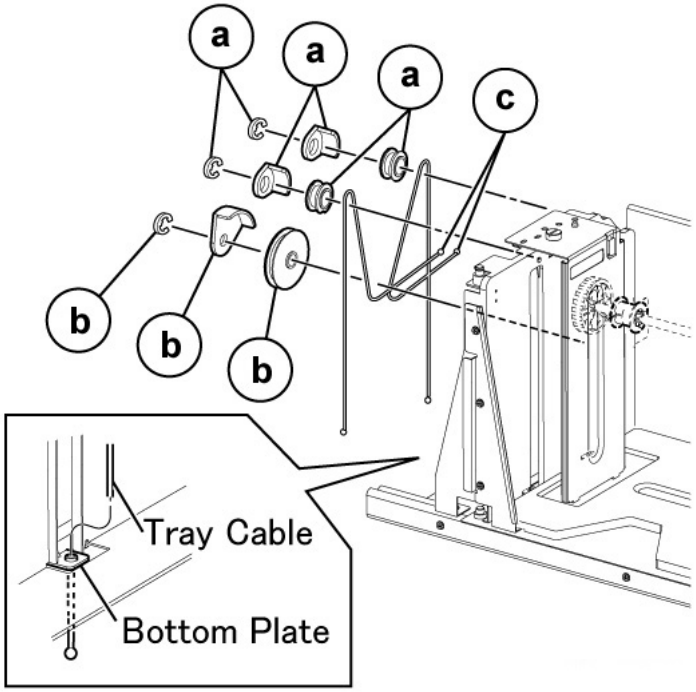

Figure 6 Rear Tray Cable details

Removing the HCF Front Tray Cables

1. Remove the (5) screws securing the HCF Tray's Front Cover.
2. At the front of the HCF Tray, begin to free up movement of the front Tray Cable Pulley (Figure 7).
   a. Remove the E-Ring on the Lift Shaft.
   b. Slide the bearing to the rear on the Lift Shaft.
   c. Front Tray Cable Pulley

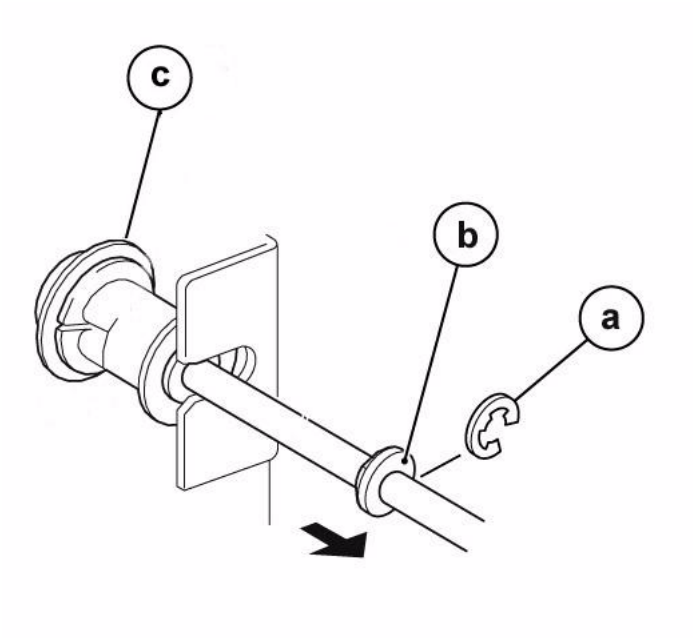

Figure 7 Lift Shaft Front Tray Cable Pulley

NOTE: *You will not be able to release the cable ends from underneath the Tray Cable Pulley until you perform the next step, which puts slack in the cable enabling the Lift Shaft to be disengaged from its bracket, and the Tray Cable Pulley moved farther to the right releasing the cable ends.*

3. Remove the E-Rings, Wire Guides, and Pulleys from the front of the HCF Tray (Figure 8).

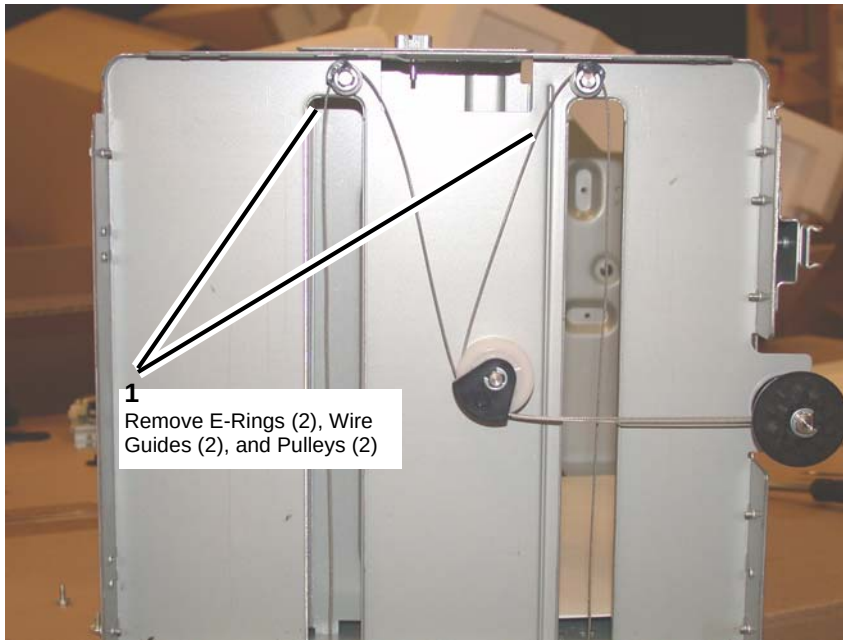

Figure 8 Preparing to remove the Front Tray Cables

4. When both sections of the cable are slack, disengage the Lift Shaft from the frame and slide the Tray Cable Pulley to the front of the Lift Shaft to release the Rear Lift Cable ends that are trapped in the pocket underneath the Tray Cable Pulley (Figure 9).

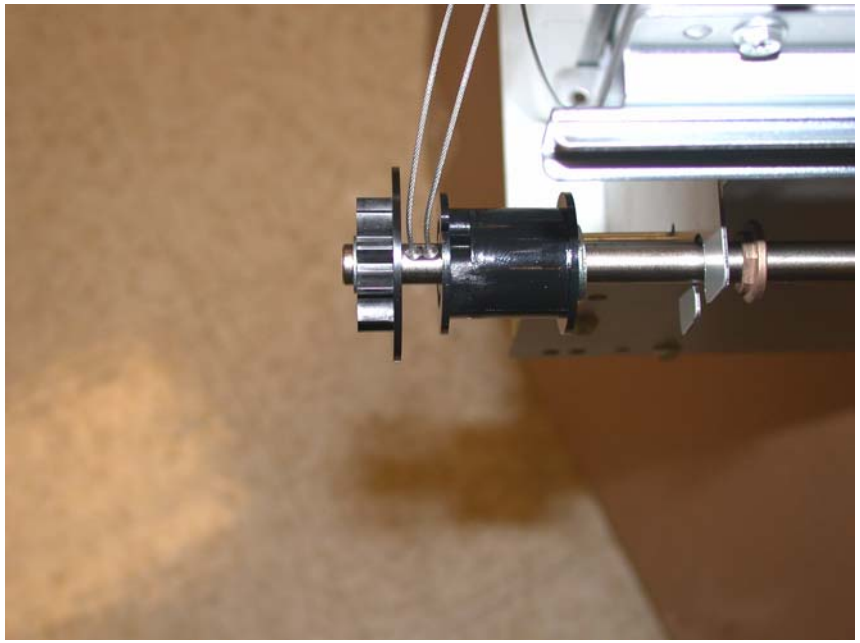

Figure 9 Releasing the Cable ends from the Lift Shaft

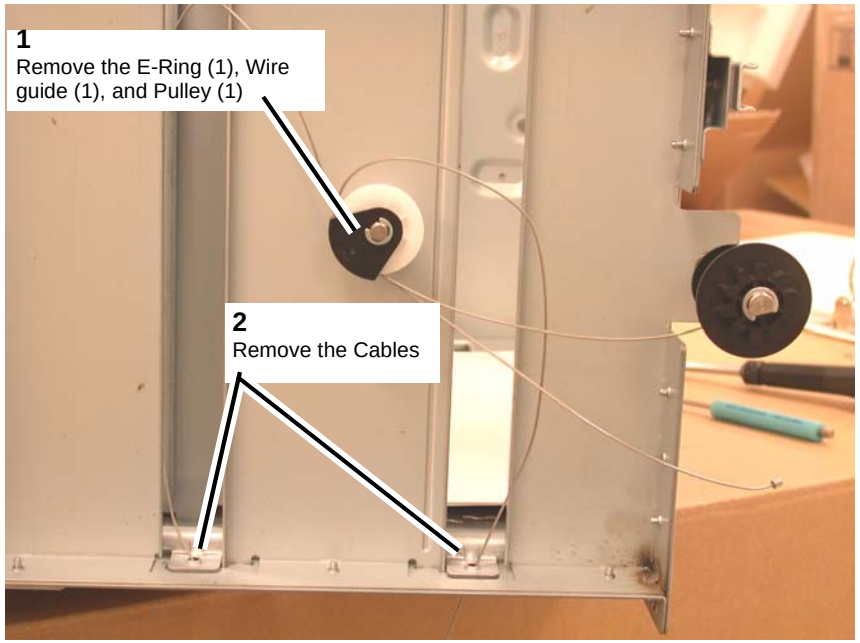

Figure 10 Removing the Front Tray Cables

5. Remove the Front Tray Cables (Figure 10, Figure 11).

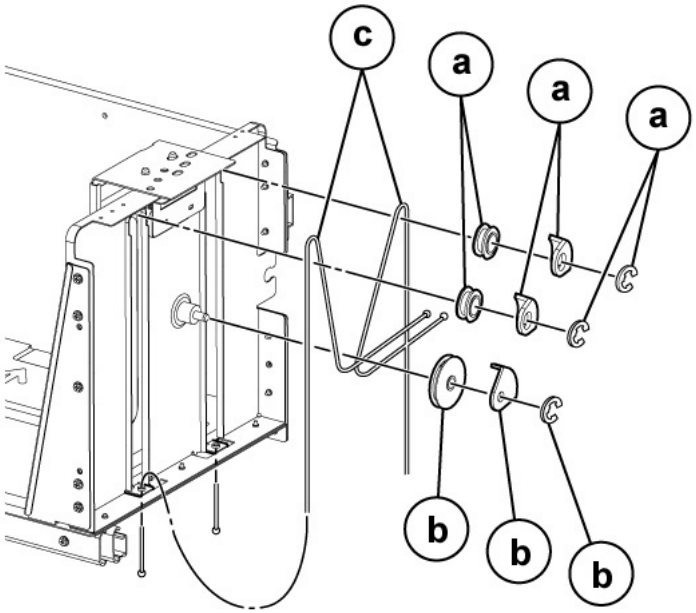

Figure 11 Front Tray Cable details

Replacement

1. Install the front Tray Cable by carrying out the removal steps in reverse order.
2. Install the rear Tray Cable by carrying out the removal steps in reverse order.
3. Reinstall the HCF Tray's Front Cover.
   a. Make sure to raise the gear on the Indicator Shaft so that it meshes with the adjoining Lift Shaft gear.
   b. Replace the (5) Installation Screws.
4. Reinstall the HCF Tray by lining up the rails of the tray with the adjoining rails of the HCF and pushing the tray into place.

REP 19.5 HCF Feed, Nudger, Retard Rolls

Parts List on PL 28.5 , PL 28.6

Removal

NOTE: *When turning the power OFF, turn the Power Switch OFF first, and then the Main Power Switch.*

NOTE: *Remove and replace the Retard/Feed/Nudger Rolls at the same time.*

1. Press the Job Status button to check that there are no jobs in progress.
2. Switch off the power and disconnect the power cord.
3. Open the Feeder Top Cover.
4. Release the green Lever to open the Upper Feeder Assembly to reveal the (3) rolls.

   NOTE: *For reference purposes, the single roll in the Upper Feeder Assembly is the Nudger roll. The double roll in the Upper Feeder Assembly is the Feed Roll. The larger double roll in the Lower Feeder component is the Retard Roll.*

5. Remove each roll by squeezing the roll's shaft at both ends and lifting the roll up and out of the HCF (Figure 1).

Figure 1 Removing rolls

Replacement

1. Install each new roll by squeezing its shaft at both ends and sliding the roll into place.
2. check that the rolls turn freely.

3. Flip down the Upper Feeder Assembly.
4. Close the Feeder Top Cover of the HCF.

REP 19.6 HCF Feed Shaft

Parts List on PL 28.5

Removal

NOTE: *When turning the power OFF, turn the Power Switch OFF first, and then the Main Power Switch.*

1. Press the Job Status button to check that there are no jobs in progress.
2. Switch off the power and disconnect the power cord.
3. Remove the HCF Feeder (REP 19.2)
4. Place the Feeder on a flat surface.
5. Open the Upper Feeder Assembly by releasing the green lever.
6. Remove the Nudger Roll by squeezing the roll's shaft at both ends (with the thumb and forefinger of one hand) and lifting the roll up and out of the HCF.
7. Remove the E-Ring and bearing on the Feed Shaft (at the Nudger Roll end of the shaft).
8. Move the bearing at the opposite end of the shaft to the right, and slide the Feed Shaft to the right to remove.

Replacement

1. To install, carry out the removal steps in reverse order.

REP 19.7 HCF Retard Lever Spring

Parts List on PL 28.6

Removal

NOTE: *When turning the power OFF, turn the Power Switch OFF first, and then the Main Power Switch.*

1. Press the Job Status button to check that there are no jobs in progress.
2. Switch off the power and disconnect the power cord.
3. Remove the HCF Feeder (REP 19.2)
4. Place the Feeder on a flat surface and release the green Lever to open the Upper Feeder Assembly.
5. Remove the Lower Chute (2 screws).
6. Remove the plastic Cover by removing (4) screws.
7. Remove the Retard Roll.
8. Remove the E-Rings on the Lever and Spring.
9. Remove the Lever.
10. Remove the Spring (Figure 1).

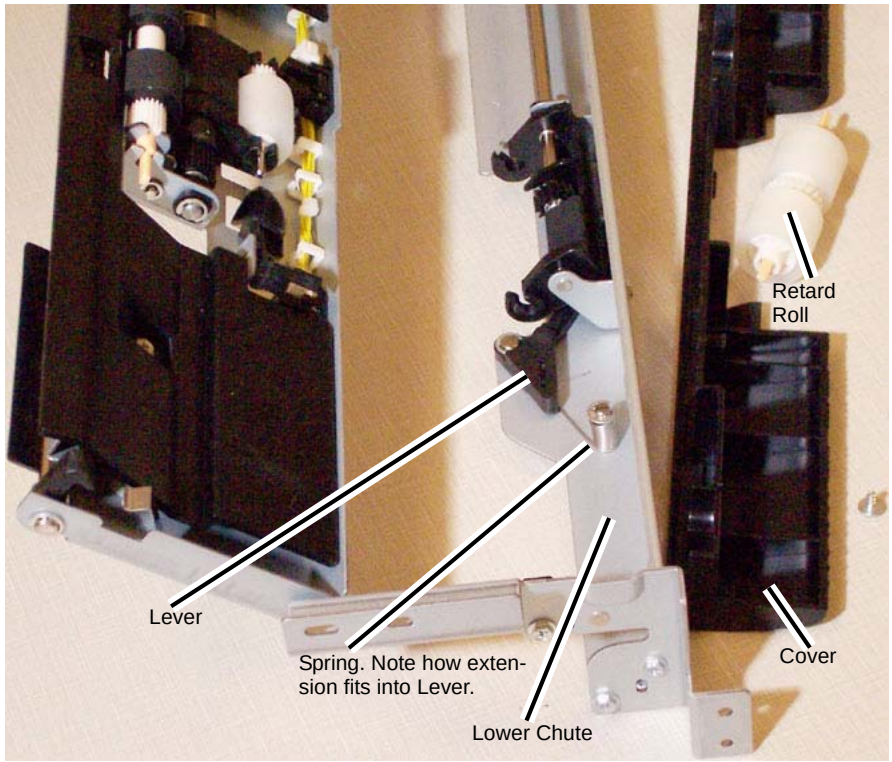

Figure 1 Removing the Retard Lever Spring

Replacement

NOTE: *Make sure the plastic pads on the Lower Chute fit in the track before pushing it in.*

1. To install, carry out the removal steps in reverse order.

REP 19.8 HCF Nudger Bracket/Nudger Lever/Torsion Spring

Parts List on PL 28.4

Removal

NOTE: *When turning the power OFF, turn the Power Switch OFF first, and then the Main Power Switch.*

1. Press the Job Status button to check that there are no jobs in progress.
2. Switch off the power and disconnect the power cord.
3. Remove the HCF Feed Shaft (REP 19.6)
4. Disassemble the Feed Shaft by removing (4) E-Rings and unscrewing the Nudger Support that retains the Torsion Spring.

Replacement

1. Install replacement parts.
2. Carry out the removal steps in reverse order.

REP 19.9 HCF Casters

Parts List on PL 28.8

Removal

NOTE: *When turning the power OFF, turn the Power Switch OFF first, and then the Main Power Switch.*

1. Press the Job Status button to check that there are no jobs in progress.
2. Switch off the power and disconnect the power cord.
3. Un-dock the HCF (REP 19.3).
4. Remove all paper from the HCF Tray.
5. Roll the HCF away from the copier/printer.
6. Turn the HCF over onto its left side to expose the casters on the underside of the HCF.
7. Remove (3) installation screws per caster.

Replacement

1. Install a new caster or casters, by tightening the (3) installation screws per caster.
2. Turn the HCF back up to an upright position.
3. Roll the HCF back toward the copier/printer.
4. Place previously removed paper, or fresh paper, into the HCF Tray.
5. Dock the HCF.

REP 19.10 HCF Takeaway Roll

Parts List on PL 28.7

Removal

NOTE: *When turning the power OFF, turn the Power Switch OFF first, and then the Main Power Switch.*

1. Press the Job Status button to check that there are no jobs in progress.
2. Switch off the power and disconnect the power cord.
3. Remove the HCF Feed Motor (REP 19.12)
4. Remove the Lower Chute (Figure 1).
   - Remove the (2) securing screws.

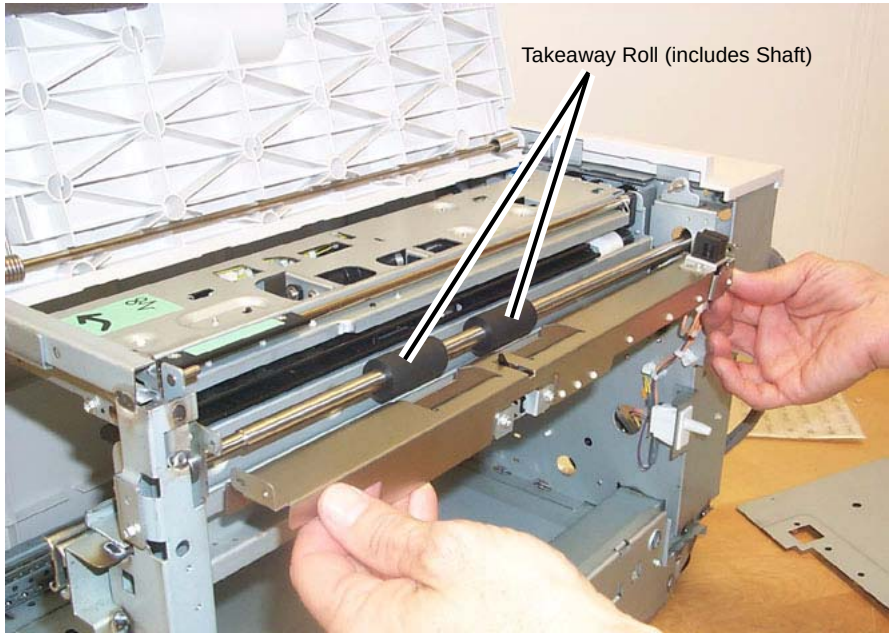

Figure 1 Removing the Lower Chute

5. Slide the Takeaway Roll to the right until the left side is released, then lower the roll to remove.

Replacement

1. To install, carry out the removal steps in reverse order.
2. When replacing, enter into Diagnostic mode and then clear the DC135HFSI counter.

REP 19.11 HCF PWB

Parts List on PL 28.8

Removal

NOTE: *When turning the power OFF, turn the Power Switch OFF first, and then the Main Power Switch.*

1. Press the Job Status button to check that there are no jobs in progress.
2. Switch off the power and disconnect the power cord.
3. Un-dock the HCF (REP 19.3).
4. Remove the plastic Rear Cover.
   - Remove the (4) securing screws.
5. Disconnect all of the connectors connected to the HCF PWB.
6. Remove the (4) screws securing the HCF PWB.
7. Remove the HCF PWB.

Replacement

1. To install, carry out the removal steps in reverse order.

REP 19.12 HCF Feed Motor

Parts List on PL 28.4

Removal

NOTE: *When turning the power OFF, turn the Power Switch OFF first, and then the Main Power Switch.*

1. Press the Job Status button to check that there are no jobs in progress.
2. Switch off the power and disconnect the power cord.
3. Un-dock the HCF (REP 19.3).
4. Remove the plastic Rear Cover.
   - Remove the (4) securing screws.

NOTE: *Be careful when removing the motor as it is meshed to a hidden gear.*

5. Supporting the motor with one hand, remove the HCF Feed Motor (Figure 1).
   - Disconnect the electrical Connector (1).
   - Remove the (2) securing screws.

Figure 1 Removing the HCF Feed Motor

Replacement

1. To install, carry out the removal steps in reverse order.

REP 21.1 (Pro) Finisher Front Door

Parts List on PL 21.3

Removal

NOTE: *When turning the power OFF, turn the Power Switch OFF first, and then the Main Power Switch.*

1. Press the **Job Status** button to check that there are no jobs in progress.
2. Switch off the power and disconnect the power cord.
3. Open the Front Door.
4. Remove the Front Door (Figure 1).

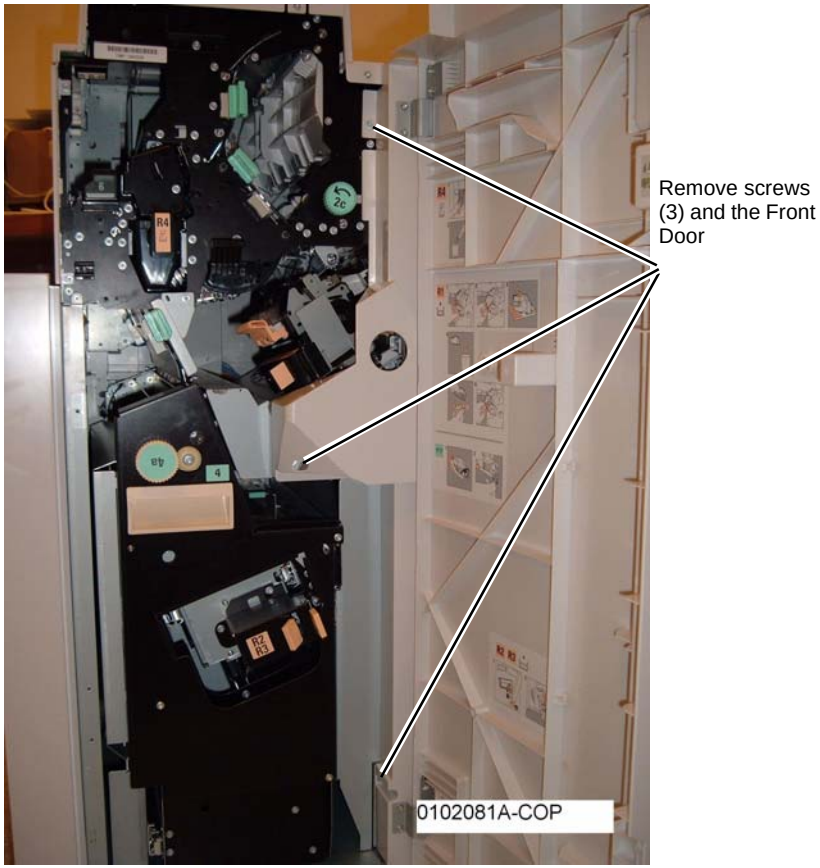

Figure 1 Removing the Front Door

REP 21.2 (Pro) Finisher Rear Upper Cover

Parts List on PL 21.2

Removal

NOTE: *When turning the power OFF, turn the Power Switch OFF first, and then the Main Power Switch.*

1. Press the **Job Status** button to check that there are no jobs in progress.
2. Switch off the power and disconnect the power cord.
3. Remove the Rear Upper Cover (Figure 1).

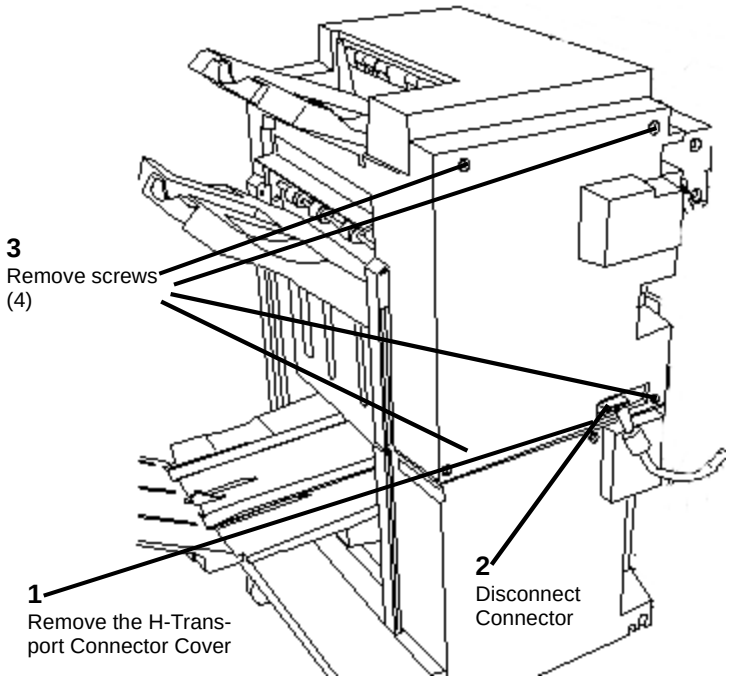

Figure 1 Removing the Rear Upper Cover

REP 21.3 (Pro) Finisher Rear Lower Cover

Parts List on PL 21.2

Removal

NOTE: *When turning the power OFF, turn the Power Switch OFF first, and then the Main Power Switch.*

1. Press the **Job Status** button to check that there are no jobs in progress.
2. Switch off the power and disconnect the power cord.
3. Remove the Rear Lower Cover (Figure 1).

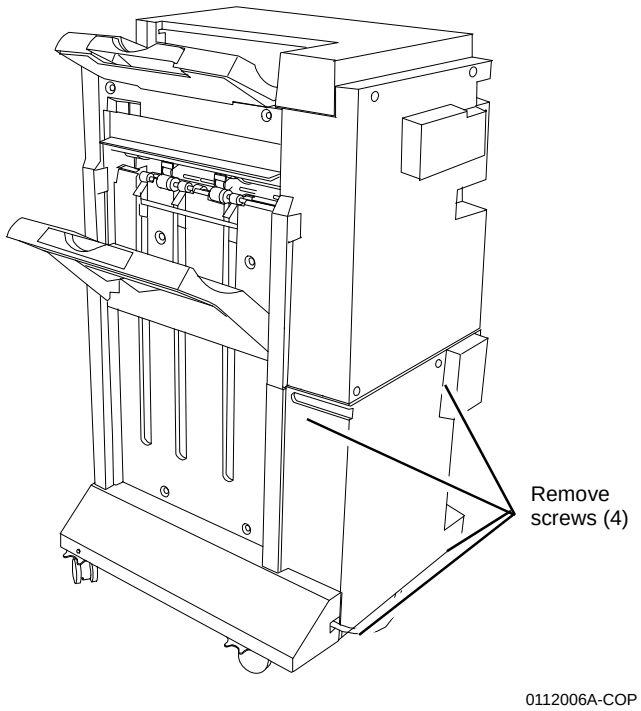

Figure 1 Removing the Rear Lower Cover

REP 21.4 (Pro) Finisher Top Cover

Parts List on PL 21.2

Removal

NOTE: *When turning the power OFF, turn the Power Switch OFF first, and then the Main Power Switch.*

1. Press the **Job Status** button to check that there are no jobs in progress.
2. Switch off the power and disconnect the power cord.
3. Open the Front Door.
4. Remove the Rear Upper Cover (REP 21.2).
5. Remove the Top Tray (REP 21.6).
6. Remove screws (Figure 1).

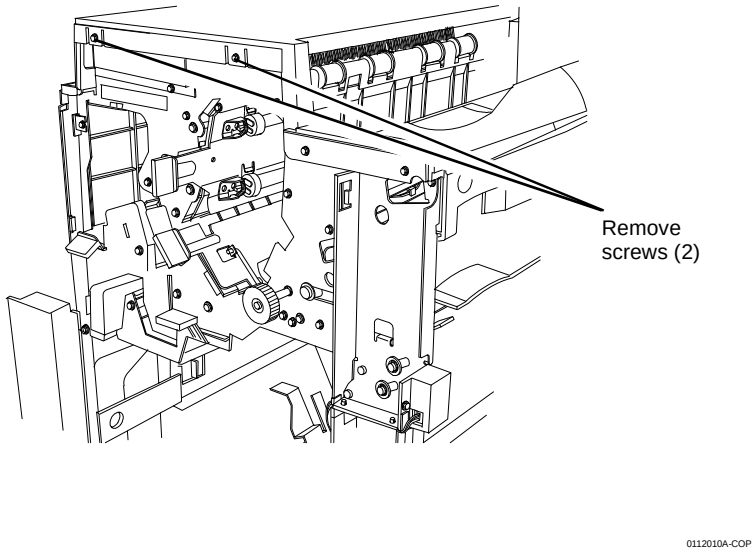

Figure 1 Removing screws

7. Remove the Top Cover (Figure 2).

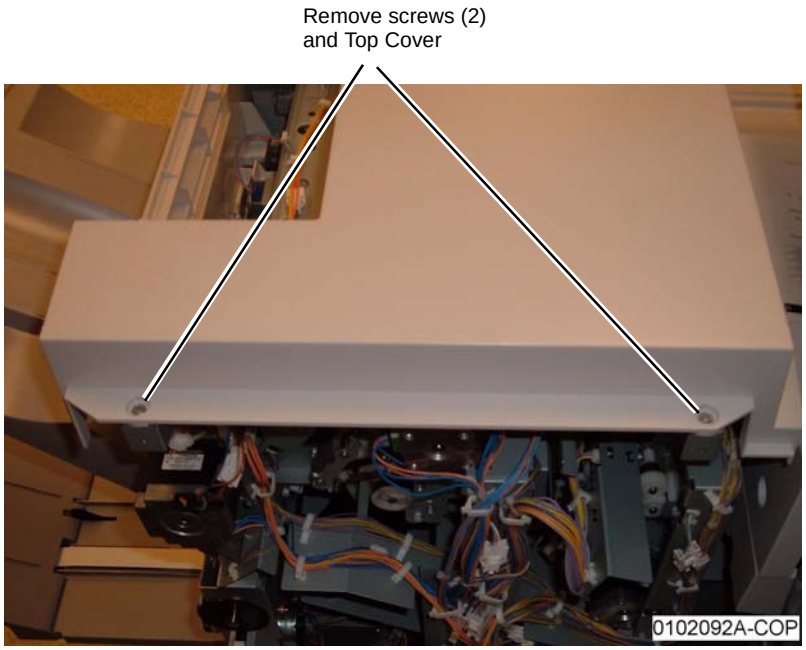

Figure 2 Removing the Top Cover

REP 21.5 (Pro) Finisher Front Top Cover

Parts List on PL 21.3

Removal

NOTE: *When turning the power OFF, turn the Power Switch OFF first, and then the Main Power Switch.*

1. Press the **Job Status** button to check that there are no jobs in progress.
2. Switch off the power and disconnect the power cord.
3. Remove the Front Door (REP 21.1).
4. Remove the Top Cover (REP 21.4).
5. Remove Front Top Cover (Figure 1).

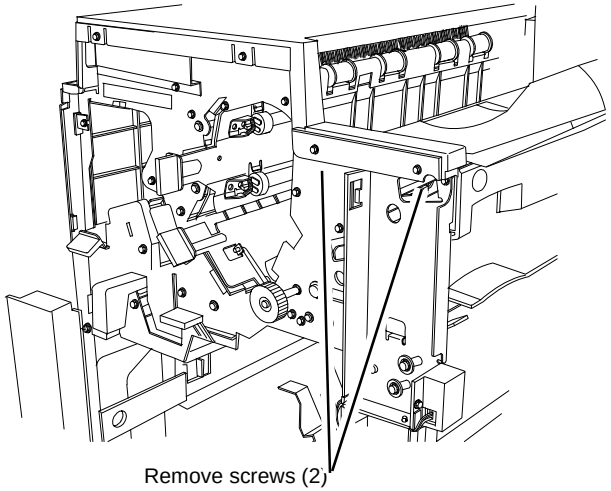

Figure 1 Removing the Front Top Cover

REP 21.6 (Pro) Finisher Top Tray

Parts List on PL 21.2

Removal

NOTE: *When turning the power OFF, turn the Power Switch OFF first, and then the Main Power Switch.*

1. Press the **Job Status** button to check that there are no jobs in progress.
2. Switch off the power and disconnect the power cord.
3. Loosen screws (Figure 1).

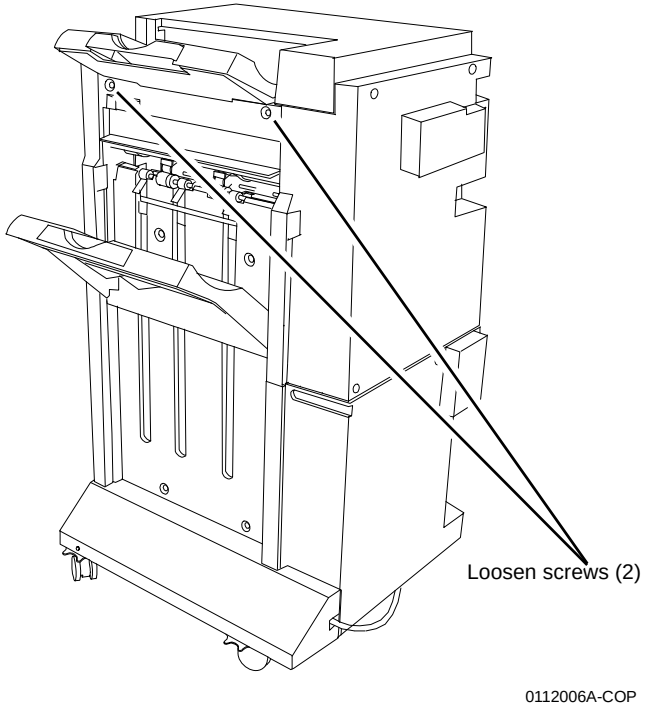

Figure 1 Loosening Screws (2)

4. Lift and remove the Top Tray.

REP 21.7 (Pro) Finisher Eject Cover

Parts List on PL 21.2

Removal

NOTE: *When turning the power OFF, turn the Power Switch OFF first, and then the Main Power Switch.*

1. Press the **Job Status** button to check that there are no jobs in progress.
2. Switch off the power and disconnect the power cord.
3. Remove the Front Door (REP 21.1).
4. Remove the Rear Upper Cover (REP 21.2).
5. Remove screw (Figure 1).

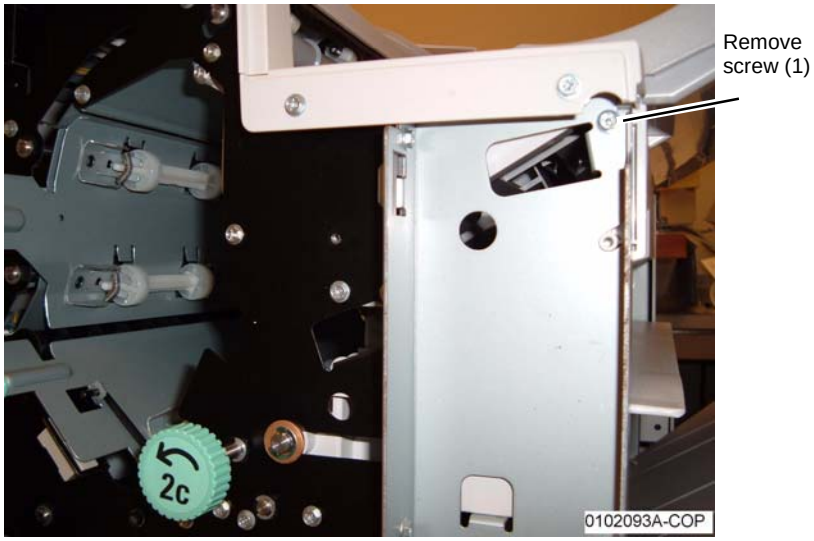

Figure 1 Removing screw

6. Remove the Eject Cover (Figure 2).

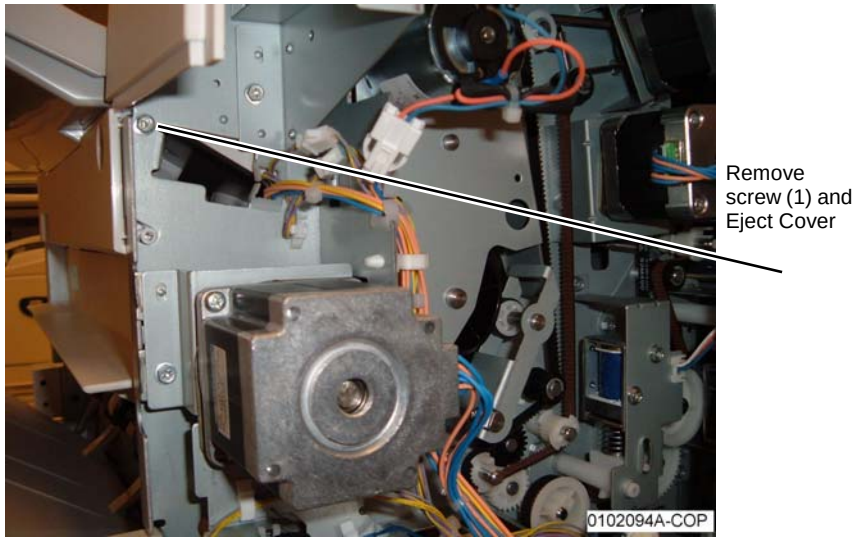

Figure 2 Removing the Eject Cover

REP 21.8 (Pro) Finisher Tray Spring Guide

Parts List on PL 21.2

Removal

NOTE: *When turning the power OFF, turn the Power Switch OFF first, and then the Main Power Switch.*

1. Press the **Job Status** button to check that there are no jobs in progress.
2. Switch off the power and disconnect the power cord.
3. Remove the Front Door (REP 21.1).
4. Remove the Rear Upper Cover (REP 21.2).
5. Remove the Top Cover (REP 21.4).
6. Remove the Front Top Cover (REP 21.5).
7. Remove the Top Tray (REP 21.6).
8. Remove screws on the rear of the Finisher (Figure 1).

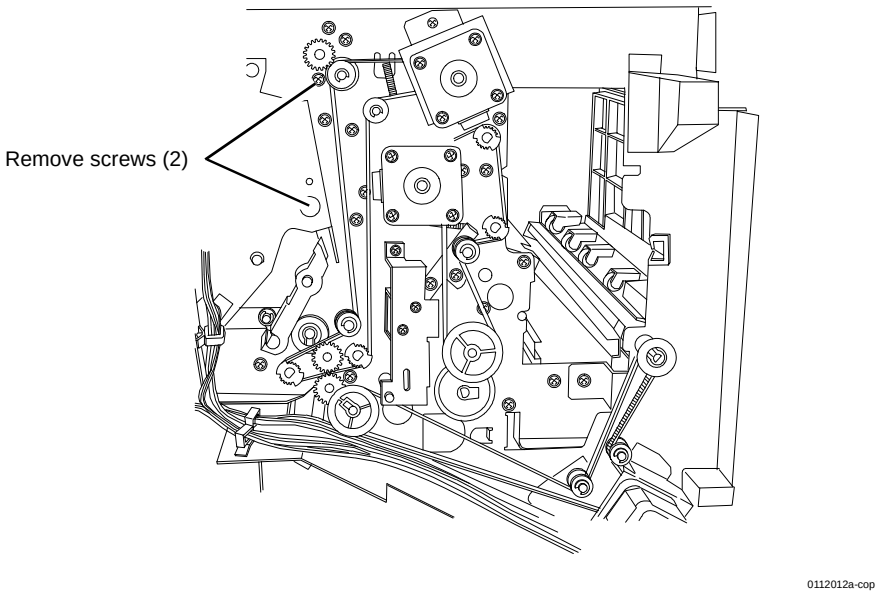

Figure 1 Removing screws on the rear of the Finisher

9. Remove screws on the front of the Finisher (Figure 2).

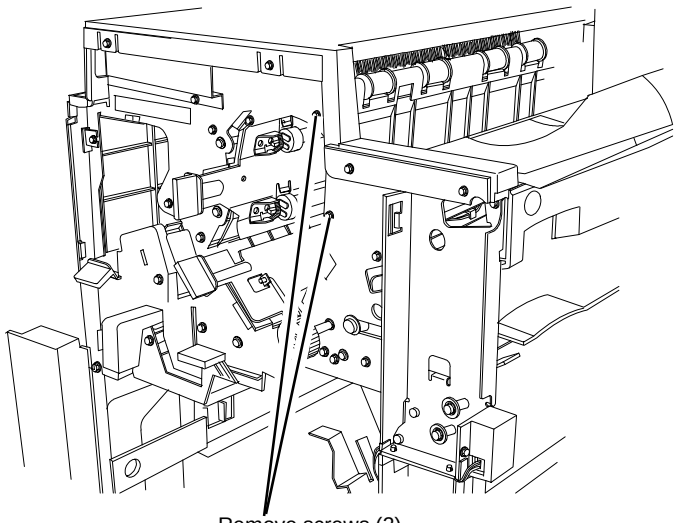

0112010A-COP

Figure 2 Removing screws on the front of the Finisher

10. Remove screws (2) securing the Top Tray Full Sensor Bracket to the Tray Spring Guide.

REP 21.9 (Pro) Finisher Inner Cover

Parts List on PL 21.8

Removal

NOTE: *When turning the power OFF, turn the Power Switch OFF first, and then the Main Power Switch.*

1. Press the **Job Status** button to check that there are no jobs in progress.
2. Switch off the power and disconnect the power cord.
3. Remove the Stacker Tray (PL 21.2).
4. Remove the Inner Cover (Figure 1).

Figure 1 Removing the Inner Cover (Professional Finisher shown)

REP 21.10 (Pro) Finisher Left Top Cover

Parts List on PL 21.3

Removal

NOTE: *When turning the power OFF, turn the Power Switch OFF first, and then the Main Power Switch.*

1. Press the **Job Status** button to check that there are no jobs in progress.
2. Switch off the power and disconnect the power cord.
3. Remove the Finisher from the IOT (REP 21.11).
4. Remove the Left Top Cover (Figure 1).

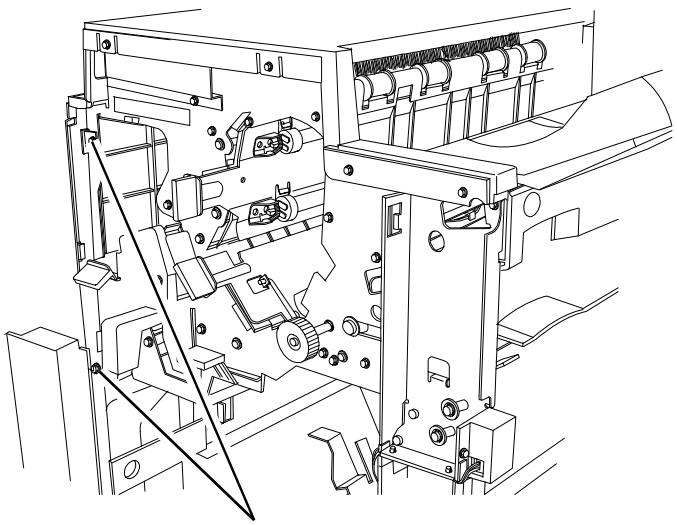

0112010A-COP

Figure 1 Removing the Left Top Cover

REP 21.11 (Pro) Finisher

Parts List on PL 21.1

Removal

NOTE: *When turning the power OFF, turn the Power Switch OFF first, and then the Main Power Switch.*

1. Press the **Job Status** button to check that there are no jobs in progress.
2. Switch off the power and disconnect the power cord.
3. Remove the H-Transport Connector Cover (PL 21.2).
4. Remove the MCU Cover .
5. Disconnect the three connectors (Figure 1).

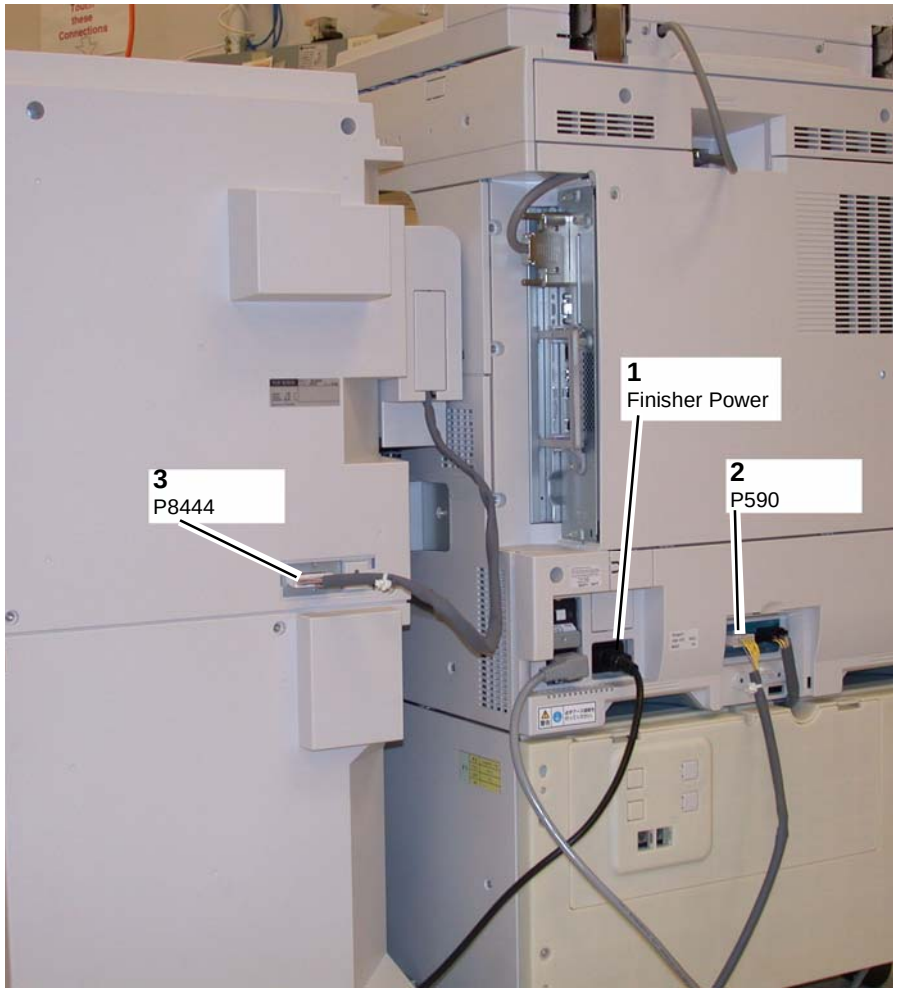

Figure 1 Disconnecting connectors

6. Open the Front Door.
7. Separate the Finisher from the IOT (Figure 2).

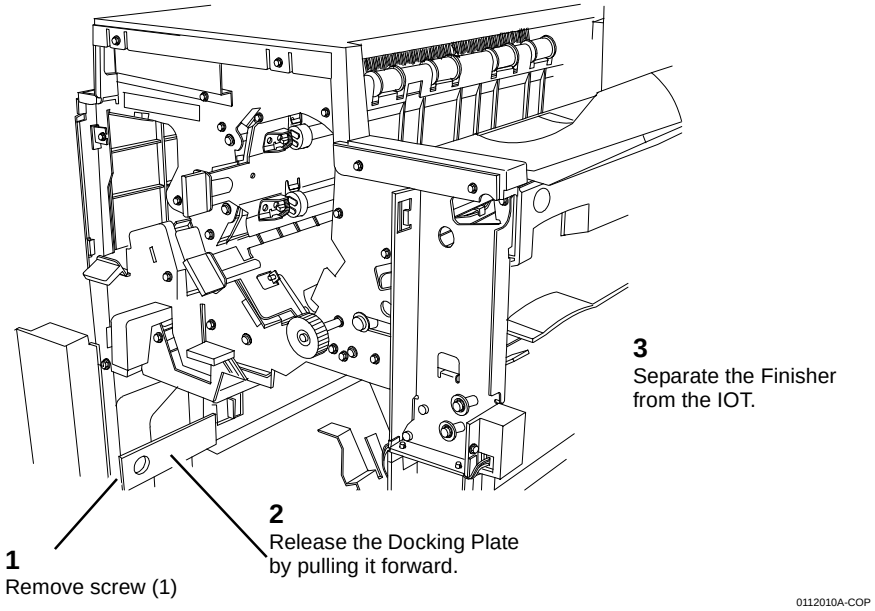

Figure 2 Separating the Finisher from the IOT

Replacement

1. If the IOT and Finisher has been moved to a new location, check (ADJ 12.2) Finisher Leveling.

REP 21.12 (Pro) Finisher H-Transport Assembly

Parts List on PL 21.1; PL 21.24

Removal

NOTE: *When turning the power OFF, turn the Power Switch OFF first, and then the Main Power Switch.*

1. Press the **Job Status** button to check that there are no jobs in progress.
2. Switch off the power and disconnect the power cord.
3. Disconnect the H-Transport Wire Harness from the Finisher (Figure 1).
   a. Remove the Connector Cover (PL 21.2).
   b. Disconnect the Wire Harness (J8444) from the Finisher (P8444).
   c. Replace the Connector Cover.
4. Remove the Finisher (REP 21.11).
5. Remove (2) screws (Figure 2).
6. Remove the H-Transport Assembly (Figure 3).

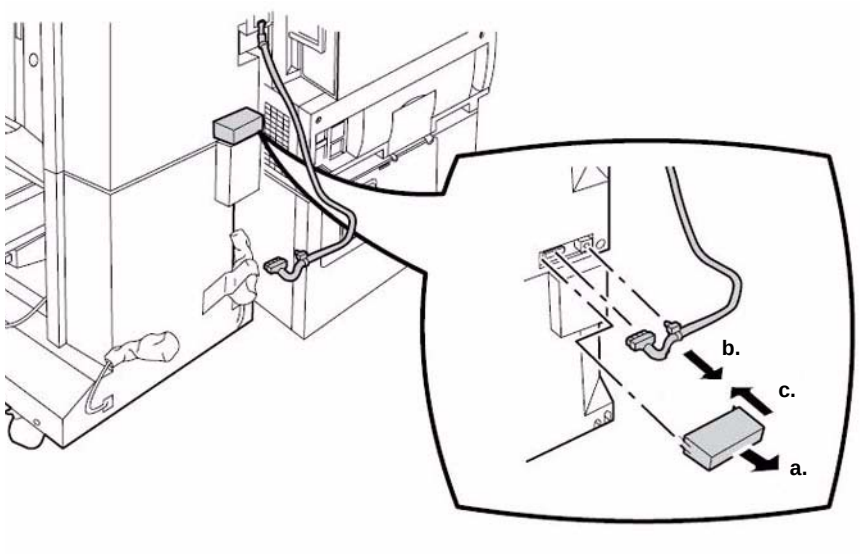

Figure 1 H-Transport Assembly to Finisher Wire Harness Connectors

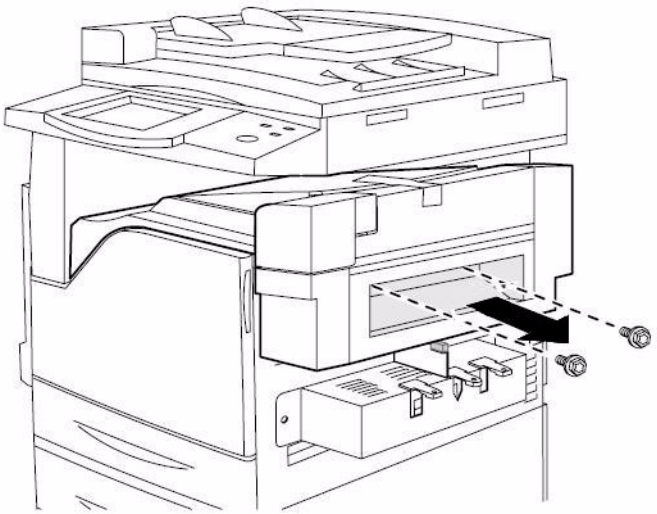

Figure 2 Removing Finisher H-Transport Assembly screws (2)

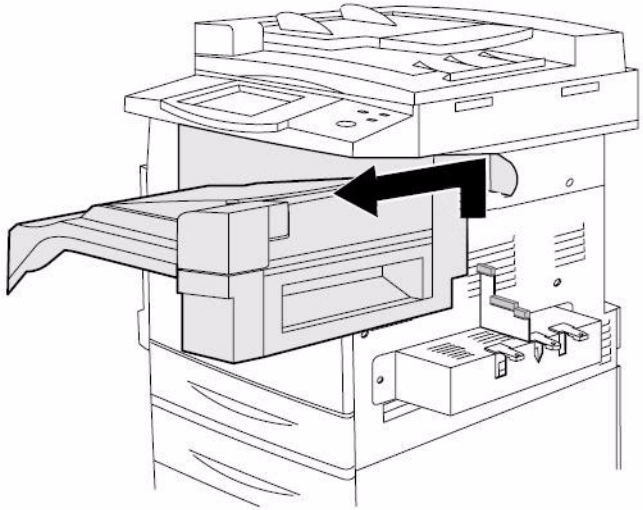

Figure 3 Removing the Finisher H-Transport Assembly

REP 21.13 (Pro) Finisher Punch Frame Assembly

Parts List on PL 21.5

Removal

NOTE: *When turning the power OFF, turn the Power Switch OFF first, and then the Main Power Switch.*

1. Press the **Job Status** button to check that there are no jobs in progress.
2. Switch off the power and disconnect the power cord.
3. Open the Front Door.
4. Remove screws (Figure 1).

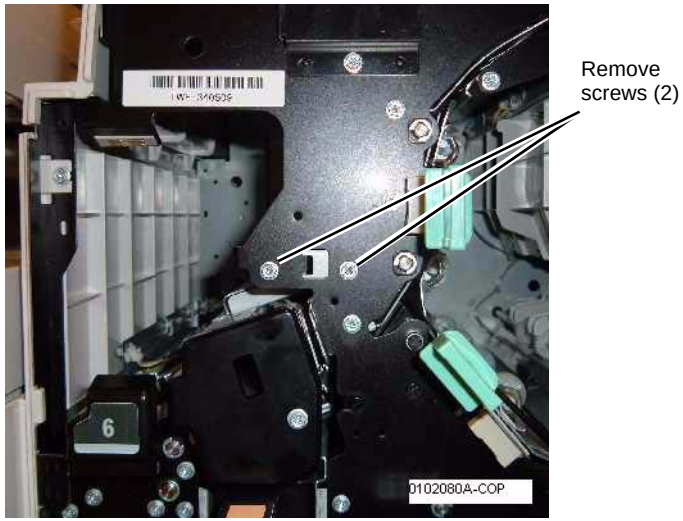

Figure 1 Removing screws

5. Remove the Rear Upper Cover (REP 21.2).

   NOTE: *In order not to damage the Registration Motor Drive Belt during the next step, use caution when removing the Punch Frame Assembly from the Finisher.*

6. Disconnect the connectors (Figure 2).

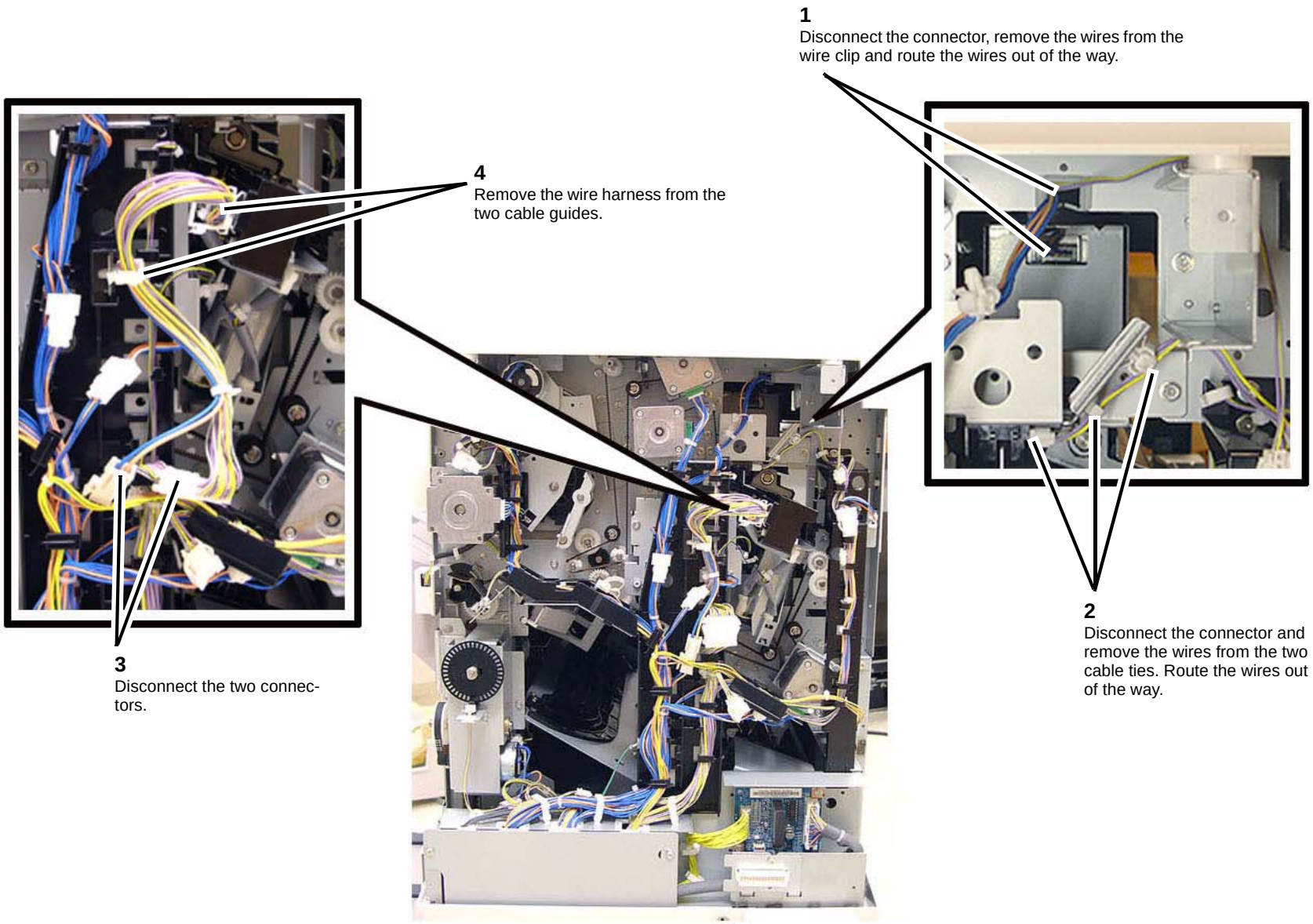

Figure 2 Disconnecting the connectors

7. Remove the two rear Punch Frame Assembly mounting screws (Figure 3).

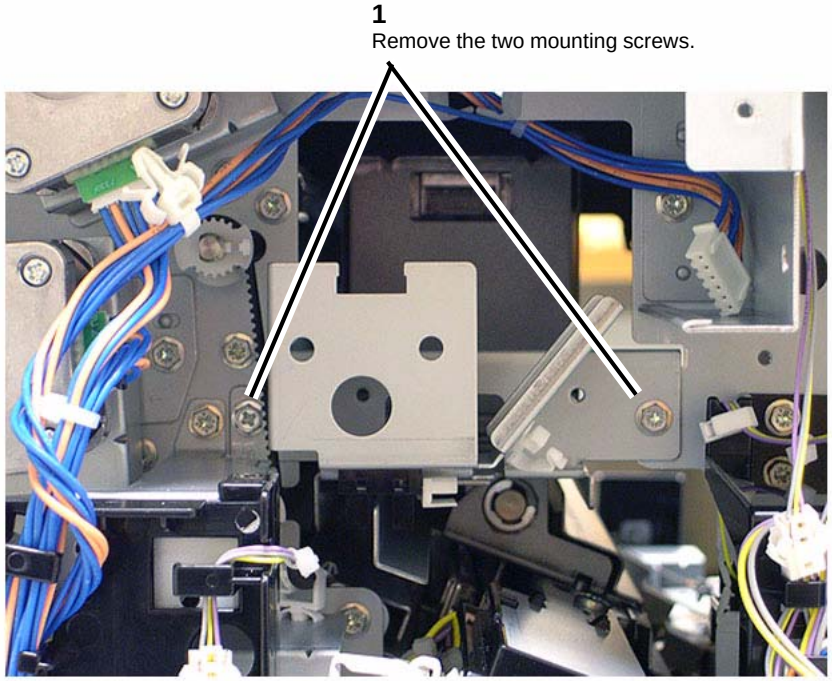

Figure 3 Removing the two Mounting Screws

8. Remove the Punch Frame Assembly from the printer (Figure 4).

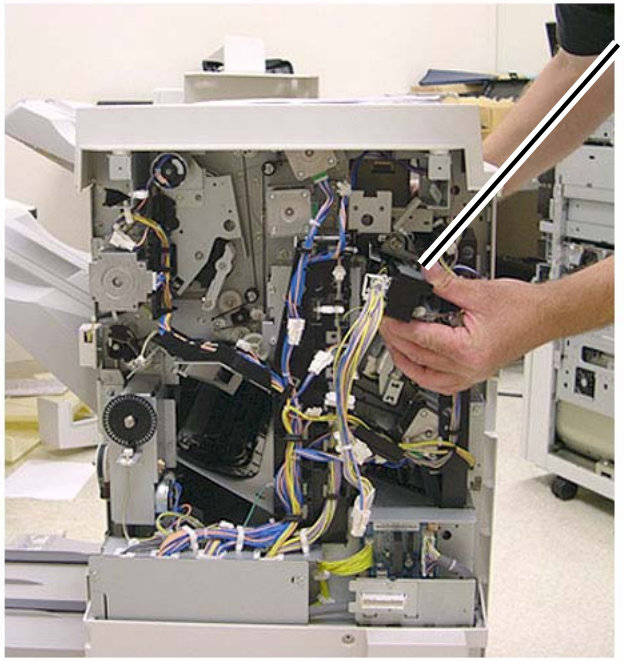

Figure 4 Removing the Punch Frame Assembly

Replacement

1. Reinstallation is the reverse of the Removal procedure.

REP 21.14 (Pro) Finisher Stapler Assembly

Parts List on PL 21.6

Removal

NOTE: *When turning the power OFF, turn the Power Switch OFF first, and then the Main Power Switch.*

1. Press the **Job Status** button to check that there are no jobs in progress.
2. Switch off the power and disconnect the power cord.
3. Open the Front Door.
4. Remove Stapler Cover (Figure 1).

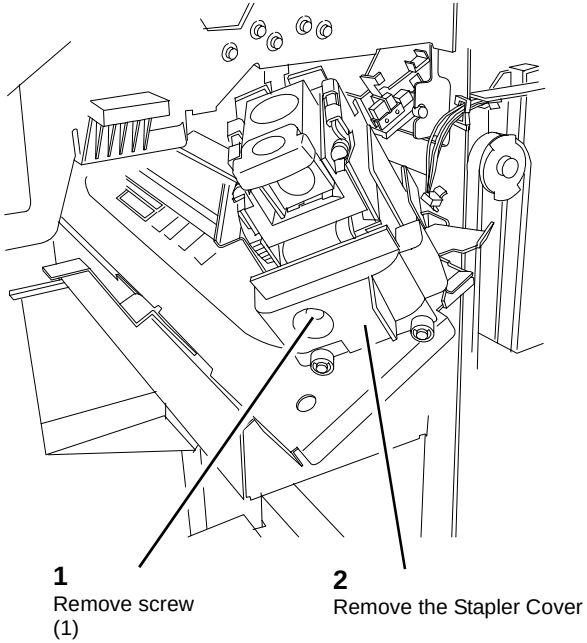

Figure 1 Removing the Stapler Cover

5. Remove the Stapler Assembly (Figure 2).

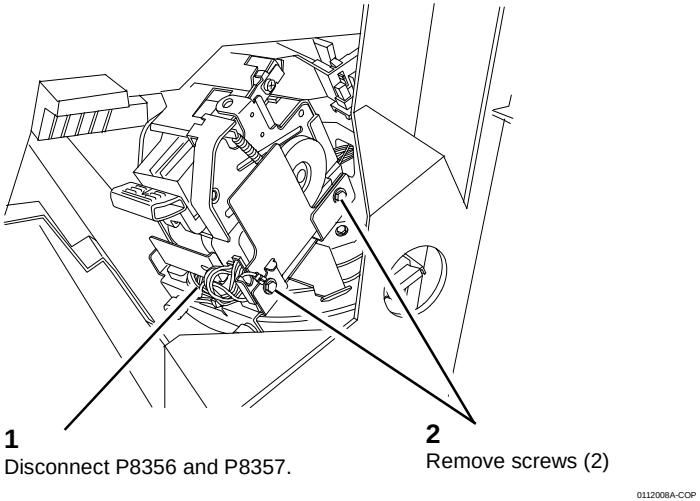

Figure 2 Removing the Stapler Assembly

REP 21.15 (Pro) Finisher Stapler Rail

Parts List on PL 21.6

Removal

NOTE: *When turning the power OFF, turn the Power Switch OFF first, and then the Main Power Switch.*

1. Press the **Job Status** button to check that there are no jobs in progress.
2. Switch off the power and disconnect the power cord.
3. Remove the Stapler Assembly (REP 21.14).
4. Remove the Inner Cover (REP 21.9).
5. Remove the Stapler Carriage (Figure 1).

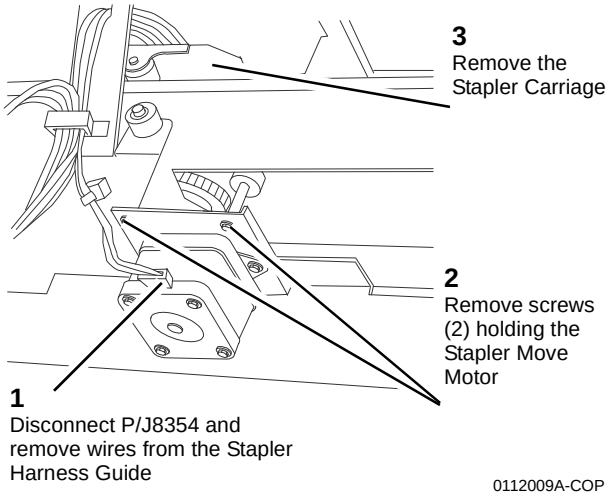

Figure 1 Removing the Stapler Carriage

6. Remove screws (6) holding the Stapler Rail.

REP 21.16 (Pro) Finisher Booklet Maker

Parts List on PL 21.1

Removal

NOTE: *When turning the power OFF, turn the Power Switch OFF first, and then the Main Power Switch.*

1. Press the **Job Status** button to check that there are no jobs in progress.
2. Switch off the power and disconnect the power cord.
3. Open the Front Door.
4. Pull out the Booklet Maker Unit until it stops.
5. Remove the Booklet Maker Stopper (black bracket on left side panel near the rear, 1 screw).
6. Remove the Booklet Maker Unit (Figure 1).

   NOTE: *Use caution to avoid personal injury and/or damage to the Booklet Maker when removing the Booklet Maker Unit from the Finisher.*

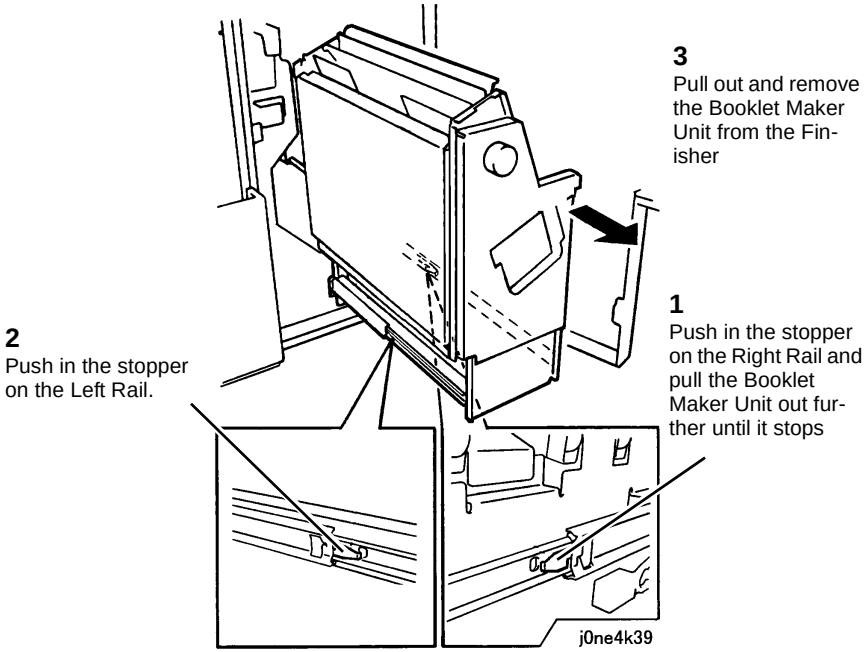

Figure 1 Removing the Booklet Maker Unit

Replacement

1. Perform the installation in the reverse order of the removal procedure, starting with attaching the Left Rail then the Right Rail.

REP 21.17 (Pro) Finisher Booklet Stapler

Parts List on PL 21.16

Removal

NOTE: *When turning the power OFF, turn the Power Switch OFF first, and then the Main Power Switch.*

1. Press the **Job Status** button to check that there are no jobs in progress.
2. Switch off the power and disconnect the power cord.
3. If the Booklet Maker Unit has been removed from the Finisher (REP 21.16), go to Figure 1.
4. Open the Front Door.
5. Pull out the Booklet Drawer Unit.
6. Remove the Booklet Stapler (Figure 1).

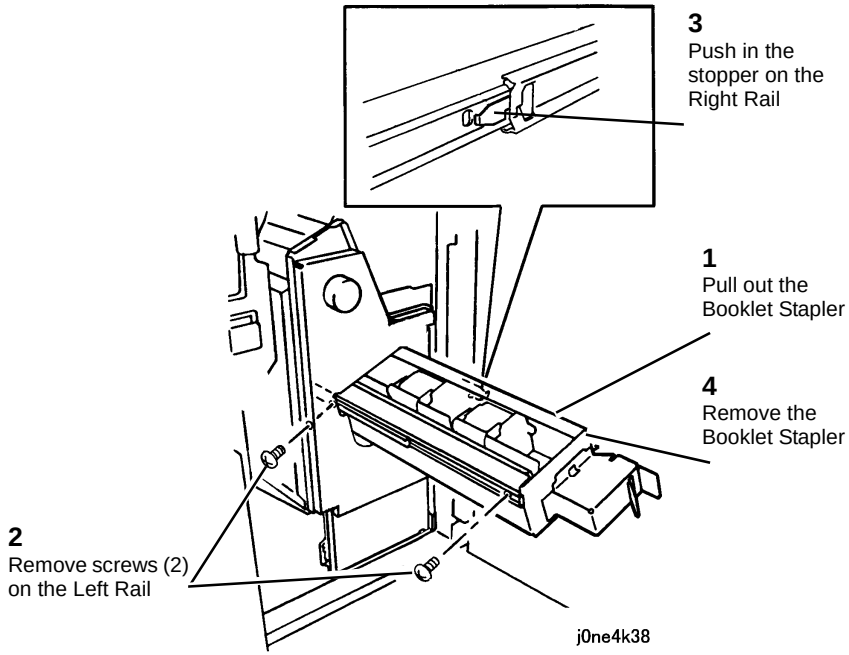

Figure 1 Removing the Booklet Stapler

REP 21.18 (Pro) Finisher Compiler Tray

Parts List on PL 21.8

Removal

NOTE: *When turning the power OFF, turn the Power Switch OFF first, and then the Main Power Switch.*

1. Press the **Job Status** button to check that there are no jobs in progress.
2. Switch off the power and disconnect the power cord.
3. Remove the Rear Upper Cover (REP 21.2).
4. Remove the Front Door (REP 21.1).
5. Remove screw securing the Compiler Tray (Figure 1).

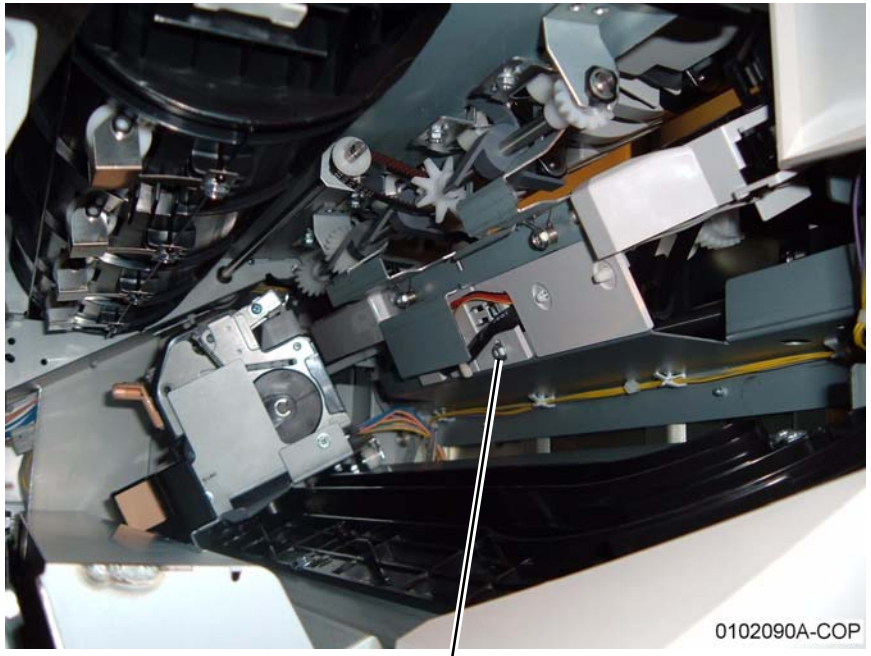

Remove screw (1)

Figure 1 Removing screw securing the Compiler Tray

6. Remove the Stapler Assembly (REP 21.14).
7. Remove the Inner Cover (REP 21.9).
8. Disconnect the Compiler Harness (Figure 2).

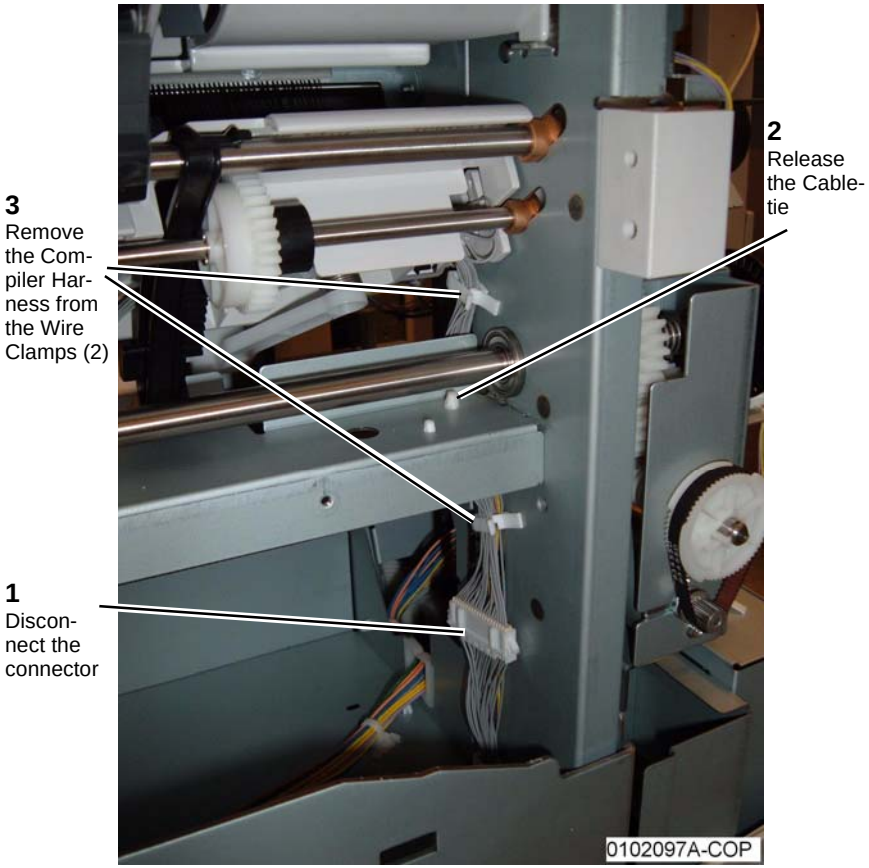

Figure 2 Disconnecting the Compiler Harness

9. Remove the Compiler Tray.
   a. Push in the Front Tab (Figure 3).

Figure 3 Pushing in the Front Tab

   b. Push in the Rear Tab (Figure 4).

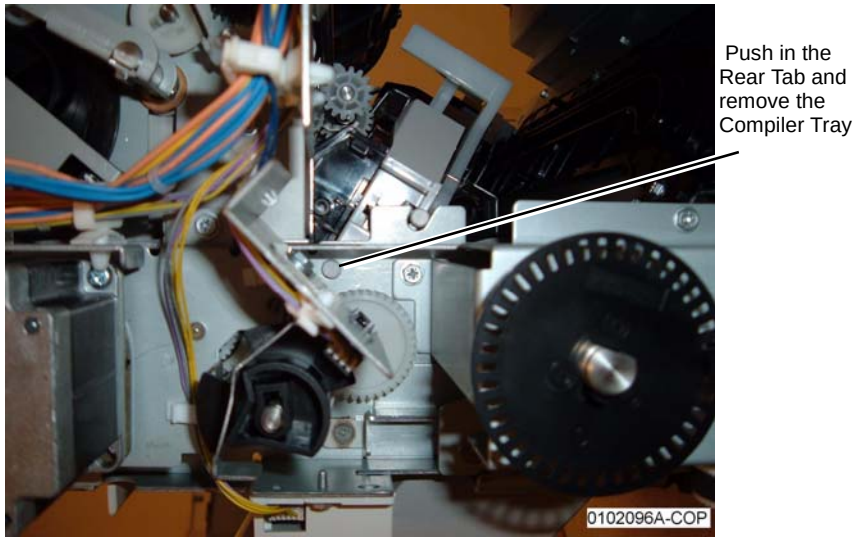

Figure 4 Pushing in the Rear Tab

REP 21.19 (Pro) Finisher Stacker Tray Position

Parts List on PL 21.2

Removal

NOTE: *When turning the power OFF, turn the Power Switch OFF first, and then the Main Power Switch.*

1. Press the **Job Status** button to check that there are no jobs in progress.
2. Switch off the power and disconnect the power cord.
3. Remove the Rear Upper Cover (REP 21.2).

   NOTE: *In the next step, while disengaging the Elevator Pulley, hold the Stacker Tray with one hand.*

4. Disengage the Elevator Pulley (Figure 1).

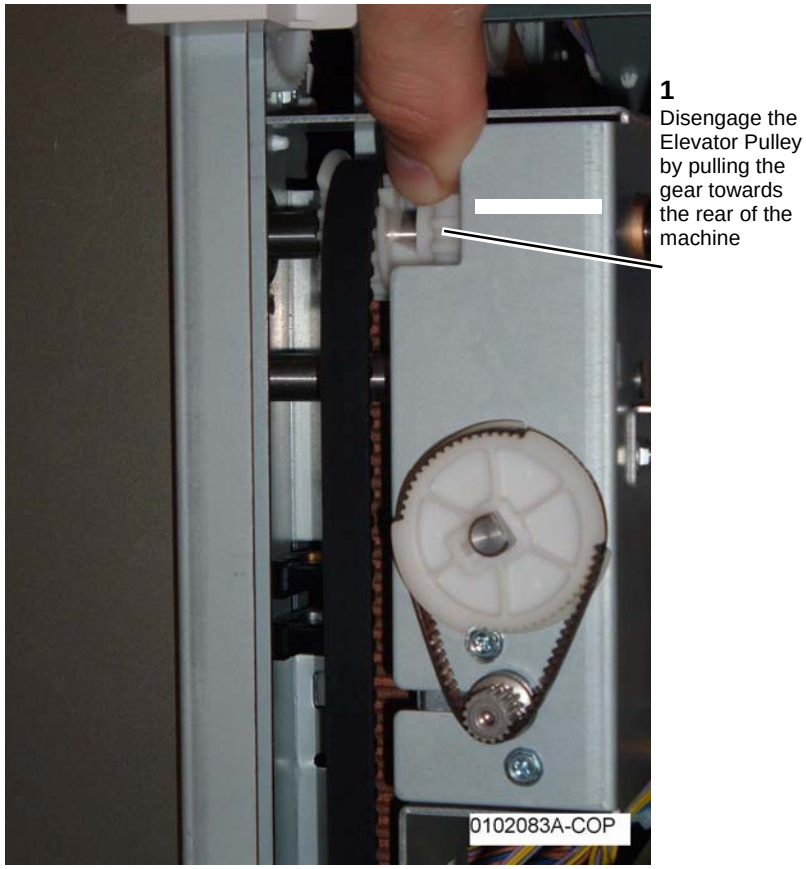

Figure 1 Disengaging the Elevator Pulley

5. Manually move the Stacker Tray Bracket up or down.

REP 21.20 (Pro) Finisher Paddle Shaft

Parts List on PL 21.9

Removal

NOTE: *When turning the power OFF, turn the Power Switch OFF first, and then the Main Power Switch.*

1. Press the **Job Status** button to check that there are no jobs in progress.
2. Switch off the power and disconnect the power cord.
3. Open the Front Door.
4. Manually move the Stapler Assembly towards the rear of the machine.
5. Remove the Rear Upper Cover (REP 21.2).
6. Remove the Paddle Shaft (Figure 1).

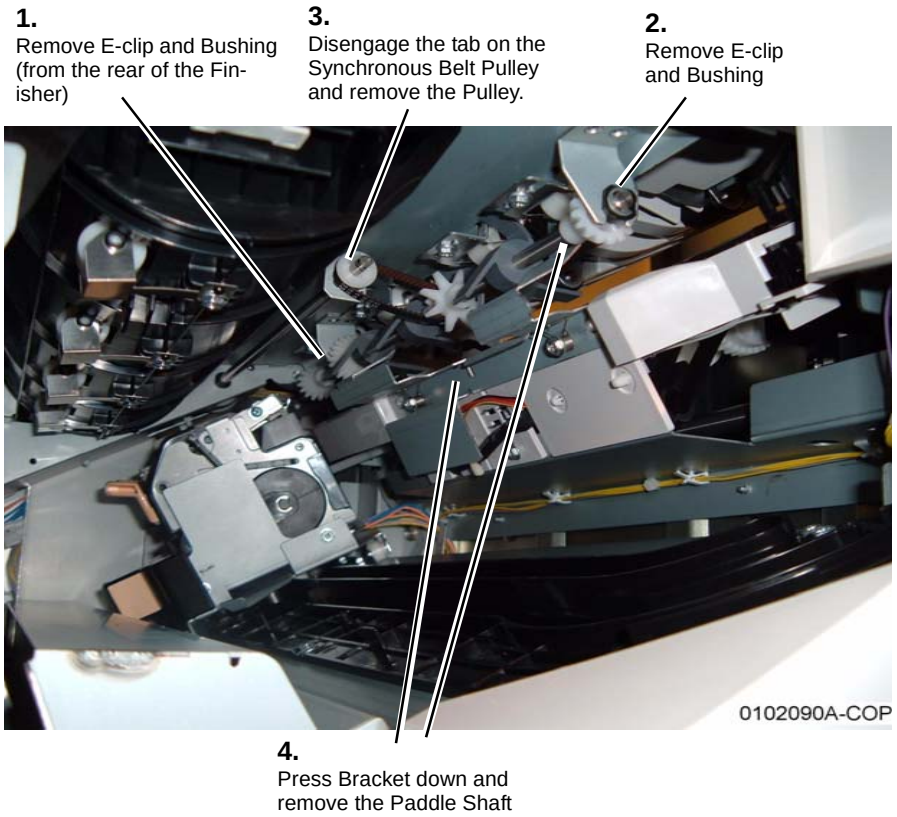

Figure 1 Removing the Paddle Shaft

Replacement

1. Reinstall components in the reverse order of the removal procedure.

REP 21.21 (Pro) Finisher Stacker Drive Belt

Parts List on PL 21.4

Removal

NOTE: *When turning the power OFF, turn the Power Switch OFF first, and then the Main Power Switch.*

1. Press the **Job Status** button to check that there are no jobs in progress.
2. Switch off the power and disconnect the power cord.
3. Remove the Front Door (REP 21.1).
4. Remove the Rear Upper Cover (REP 21.2).
5. Remove the Rear Lower Cover (REP 21.3).
6. Perform REP 21.19 Stacker Tray (position the Stacker Tray in the lowest position).
7. Remove the rear Stacker Drive Belt (Figure 1).

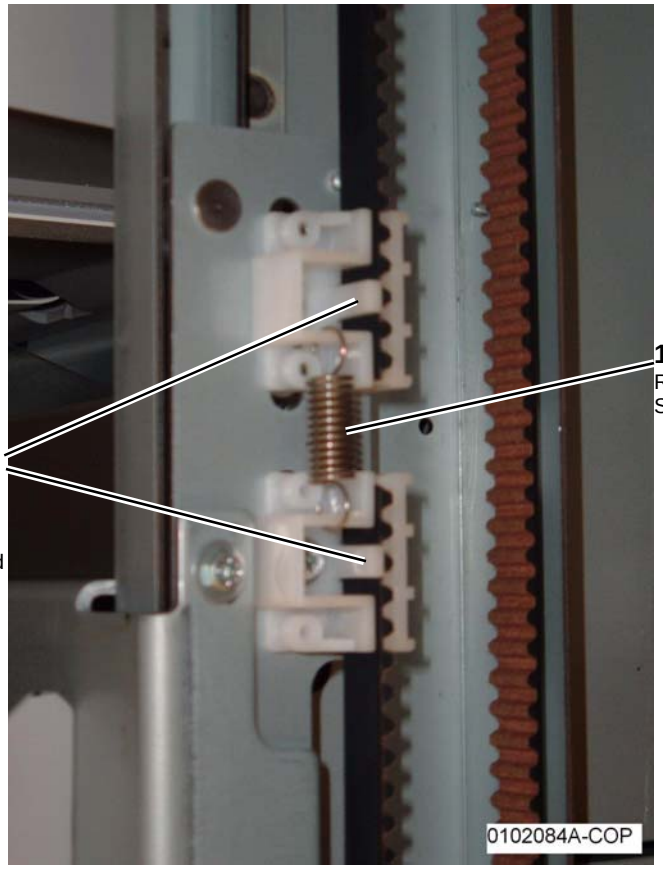

Figure 1 Removing the rear Stacker Belt

8. Remove the front Stacker Drive Belt (Figure 2).

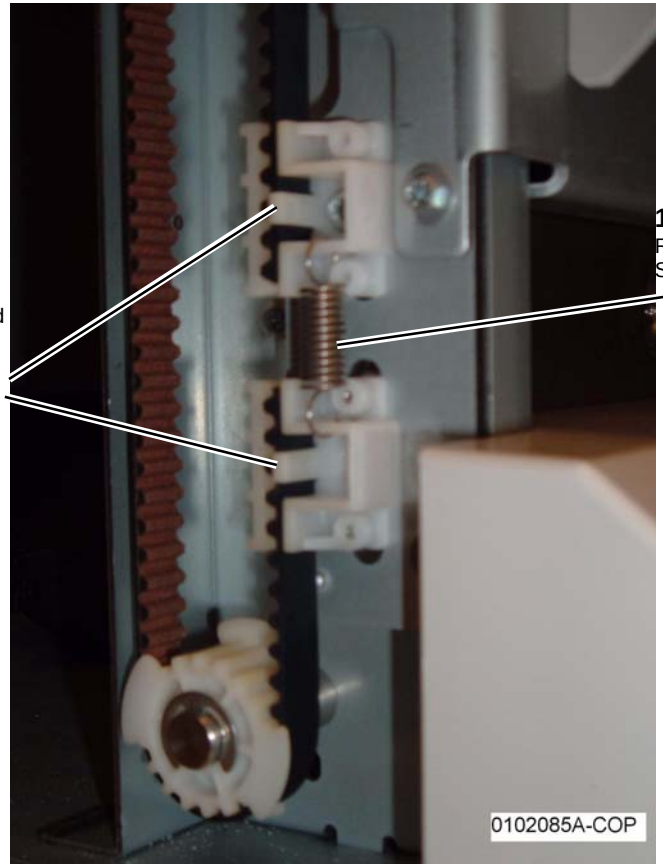

Figure 2 Removing the front Stacker Belt

Replacement

1. Reinstall components in the reverse order of the removal procedure. Refer to Figure 2 and Figure 1 for Stacker Drive Belt positioning in the Belt Clamps.

REP 21.22 (Pro) Finisher Buffer Path Sensor

Parts List on PL 21.10

Removal

NOTE: *When turning the power OFF, turn the Power Switch OFF first, and then the Main Power Switch.*

1. Press the **Job Status** button to check that there are no jobs in progress.
2. Switch off the power and disconnect the power cord.
3. Remove the Finisher from the IOT (REP 21.11).
4. Remove the Punch Assembly (REP 21.13).
5. Remove the Left Top Cover (REP 21.10).
6. Remove the Buffer Path Sensor (Figure 1).

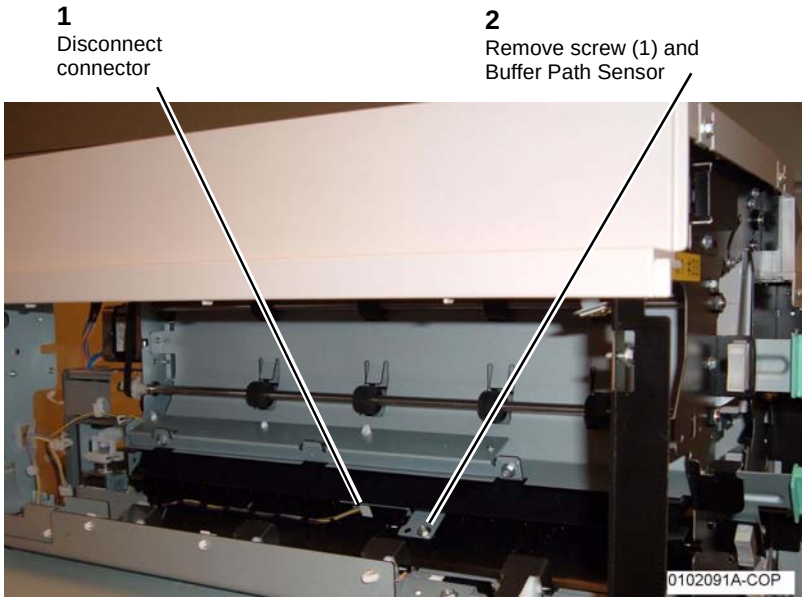

Figure 1 Removing the Buffer Path Sensor

REP 21.23 (Pro) Finisher Gate Sensor

Parts List on PL 21.11

Removal

NOTE: *When turning the power OFF, turn the Power Switch OFF first, and then the Main Power Switch.*

1. Press the **Job Status** button to check that there are no jobs in progress.
2. Switch off the power and disconnect the power cord.
3. Remove the Finisher from the IOT (REP 21.11).
4. Remove the Punch Assembly (REP 21.13).
5. Remove the Left Top Cover (REP 21.10).
6. Remove the Gate Sensor (Figure 1).

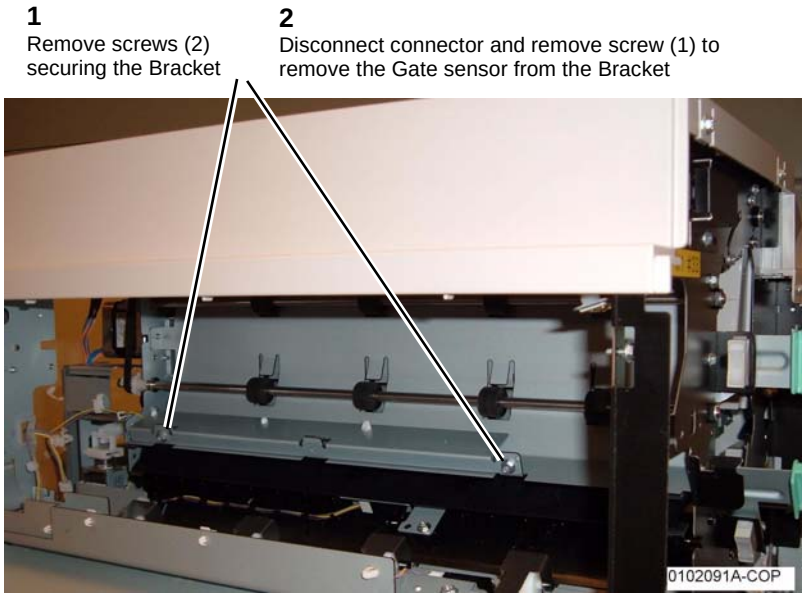

Figure 1 Removing the Gate Sensor

REP 21.24 (Pro) Finisher Top Tray Full Sensor

Parts List on PL 21.11

Removal

NOTE: *When turning the power OFF, turn the Power Switch OFF first, and then the Main Power Switch.*

1. Press the **Job Status** button to check that there are no jobs in progress.
2. Switch off the power and disconnect the power cord.
3. Remove the Front Door (REP 21.1).
4. Remove the Rear Upper Cover (REP 21.2).
5. Remove the Top Cover (REP 21.4).
6. Remove the Front Top Cover (REP 21.5).
7. Remove the Top Tray (REP 21.6).
8. Remove the Tray Spring Guide (REP 21.8).
9. Disconnect P/J8322 and remove screw (1) securing the Top Tray Full Sensor to the Sensor Bracket.

REP 21.25 (Pro) Finisher Buffer Roll

Parts List on PL 21.10

Removal

NOTE: *When turning the power OFF, turn the Power Switch OFF first, and then the Main Power Switch.*

1. Press the **Job Status** button to check that there are no jobs in progress.
2. Switch off the power and disconnect the power cord.
3. Remove the Rear Upper Cover (REP 21.2).
4. Route the wires out of the Harness Bracket (Figure 1).

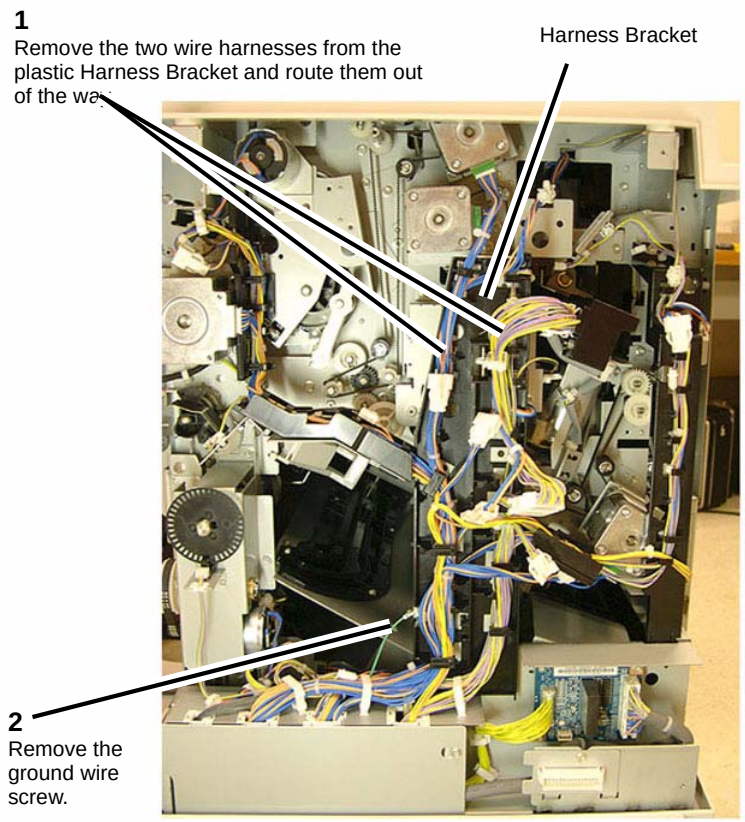

Figure 1 Routing the Wires out of the Harness Bracket

5. Remove the Harness Bracket (Figure 2).

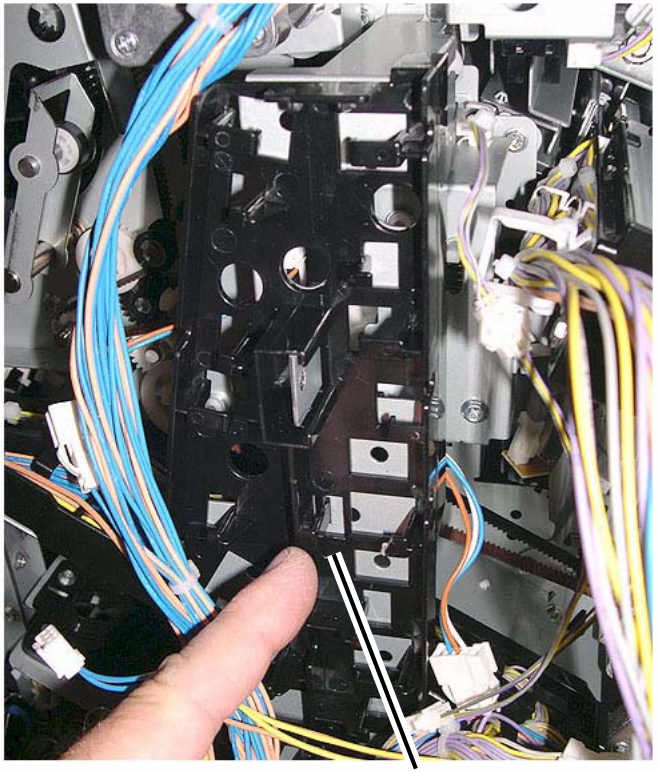

2
Remove the Harness Bracket from the machine.

1
Detach the Harness Bracket by releasing the two plastic clips at the back of the bracket.

Figure 2 Removing the Harness Bracket

6. Remove the Transport Gate Solenoid Bracket (Figure 3).

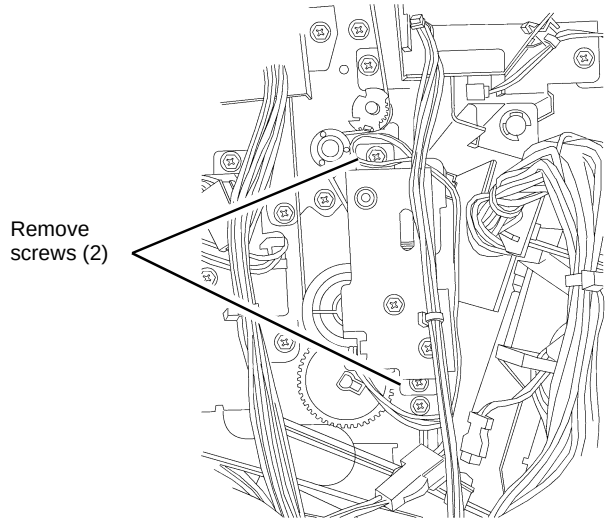

0112004A-COP

Figure 3 Removing the Transport Gate Solenoid Bracket

7. Remove Pulley and Gear (Figure 4).

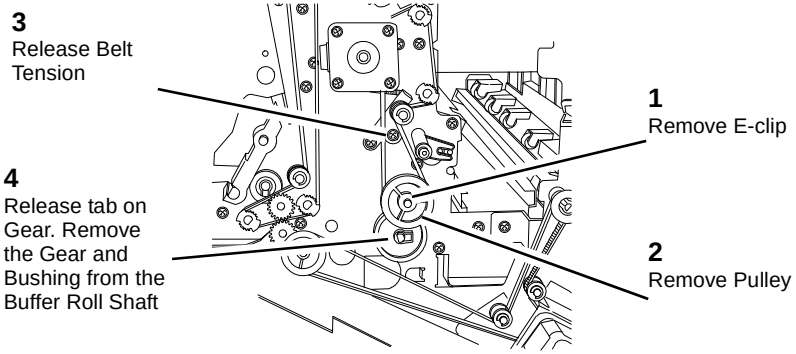

0112005-COP

Figure 4 Removing Pulley and Gear

8. Open the Front Door.
9. Manually move the Stapler Assembly towards the back of the Finisher.

10. Remove the Buffer Roll (Figure 5).

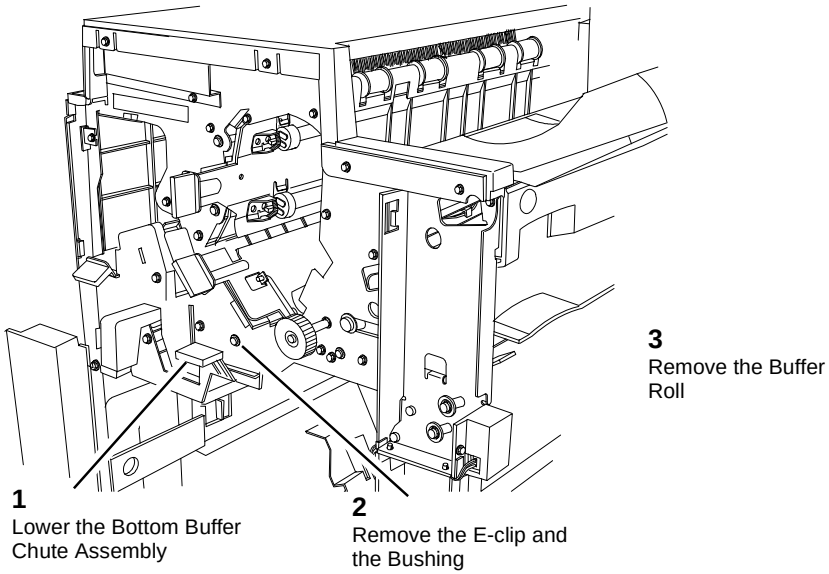

Figure 5 Removing the Buffer Roll

Replacement

1. Ensure that the Transport Gate is in the correct position when re-assembling.

REP 21.26 (Pro) Finisher Bottom Buffer Chute Assembly

Parts List on PL 21.10

Removal

NOTE: *When turning the power OFF, turn the Power Switch OFF first, and then the Main Power Switch.*

1. Press the **Job Status** button to check that there are no jobs in progress.
2. Switch off the power and disconnect the power cord.
3. Open the Front Door.
4. Remove the Booklet Maker Unit (REP 21.16).
5. Remove the Baffle (Figure 1).

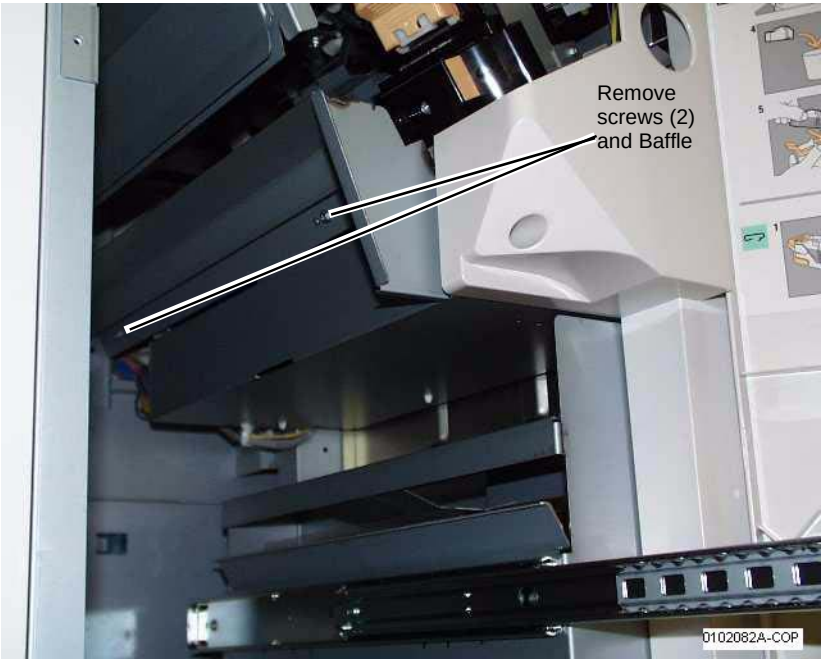

Figure 1 Removing Baffle

6. Remove the Bottom Buffer Chute Assembly (Figure 2).

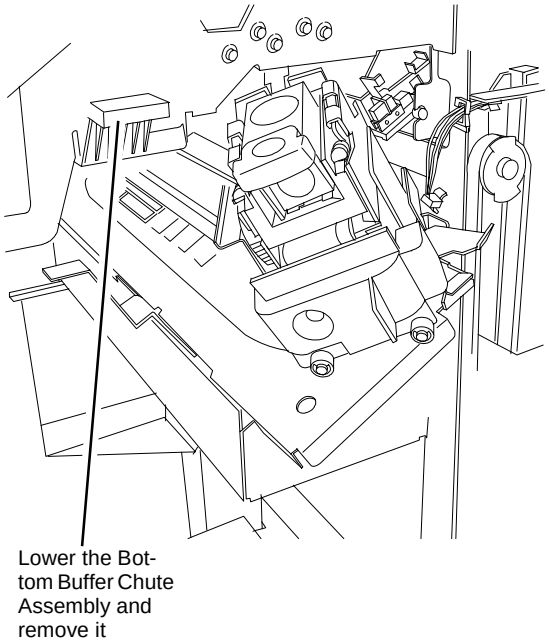

Figure 2 Removing the Bottom Buffer Chute Assembly

REP 21.27 (Pro) Finisher H-Transport Drive Belt

Parts List on PL 21.26

Removal

NOTE: *When turning the power OFF, turn the Power Switch OFF first, and then the Main Power Switch.*

1. Press the **Job Status** button to check that there are no jobs in progress.
2. Switch off the power and disconnect the power cord.
3. Remove the Finisher (REP 21.11).
4. Remove the H-Transport Assembly (REP 21.12) and place it upside down on a secure flat surface.
5. Release the tension from the belt (Figure 1):
   a. Use the Tension Bracket Assembly to release initial tension from the belt (PL 21.24)
   b. Slide the belt of the two pulleys

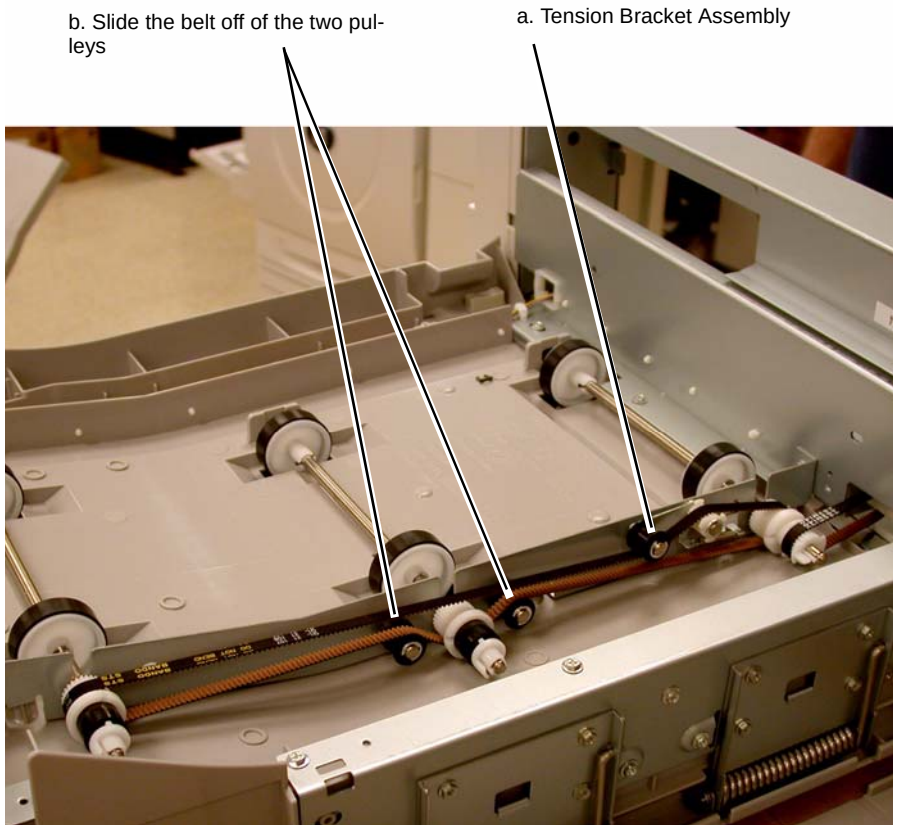

Figure 1 Releasing tension from the Drive belt

NOTE: *Note the position of the Drive belt in relationship to the gears and pulleys for correct re-installation.*

6. Remove the Drive Belt (PL 21.26): (Figure 2)
   a. Remove the clip from the Roll Shaft Assembly (PL 21.26).
   b. Lift up on the belt side of the Roll Shaft Assembly then remove the smaller belt from the pulley.
   c. Remove the Drive belt.

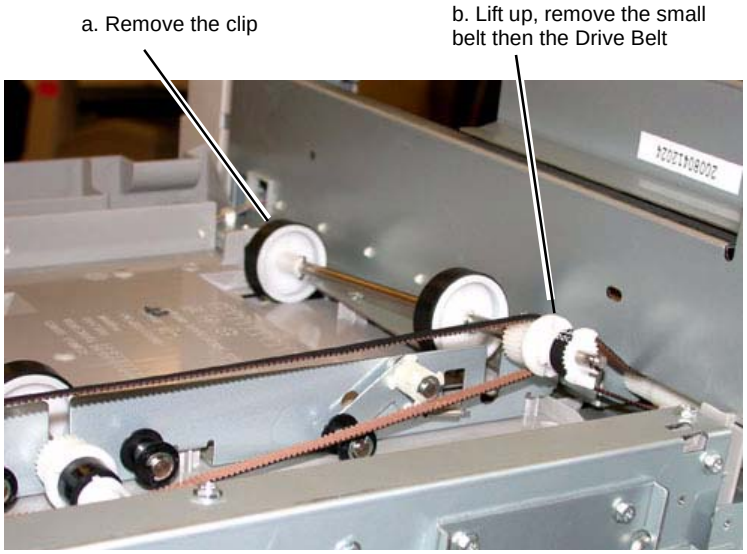

Figure 2 Removing the H-Transport Drive belt

REP 21.28 (Pro) Finisher Eject Chute Assembly

Parts List on PL 21.7

Removal

NOTE: *When turning the power OFF, turn the Power Switch OFF first, and then the Main Power Switch.*

1. Press the **Job Status** button to check that there are no jobs in progress.
2. Switch off the power and disconnect the power cord.
3. Remove the Front Door (REP 21.1).
4. Remove the Rear Upper Cover (REP 21.2).
5. Remove the Top Tray (REP 21.6).
6. Remove the Eject Cover (REP 21.7).
7. Remove E-clip and Bushing from the Eject Pinch Shaft (Figure 1).

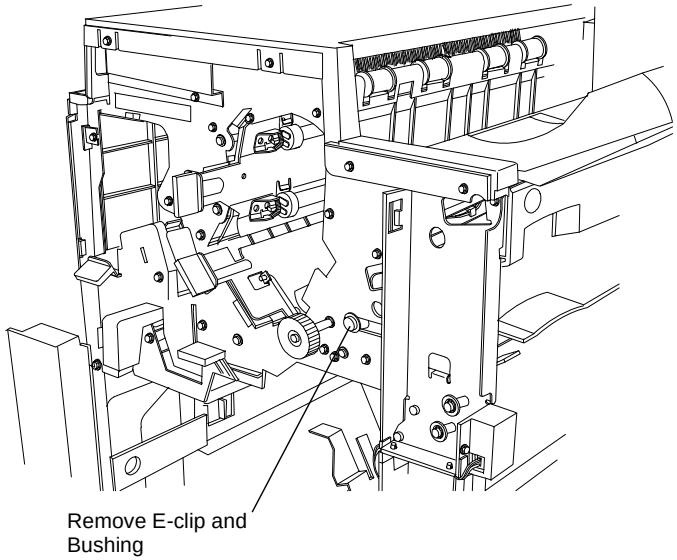

Figure 1 Removing E-clip and Bushing

8. Remove Pinch Springs and screws from the Eject Pinch Shaft (Figure 2).

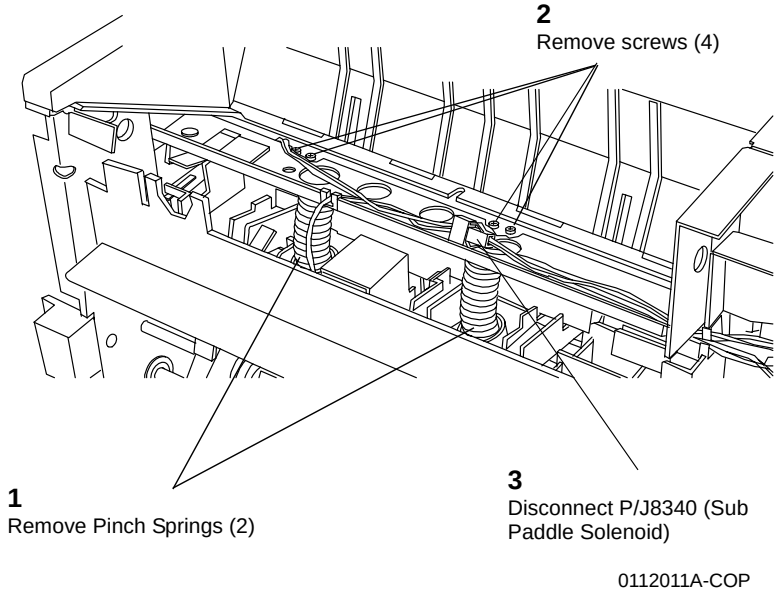

Figure 2 Removing Pinch Springs and screws

9. Remove the Eject Chute Assembly (Figure 3).

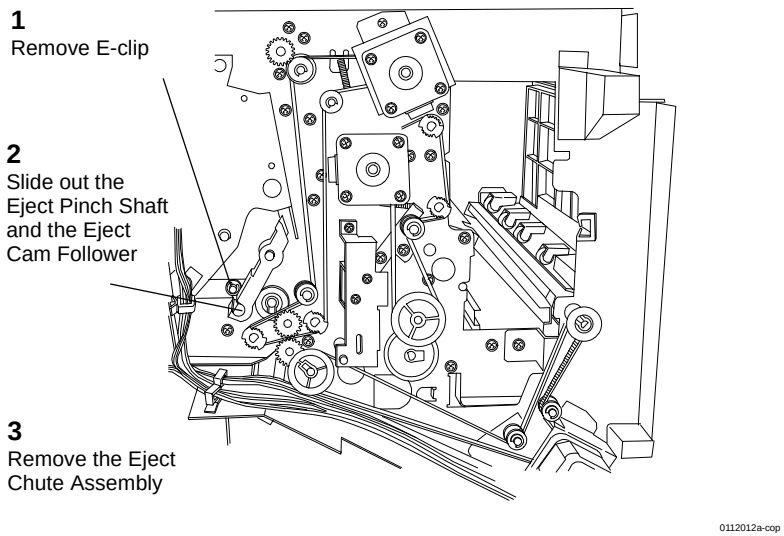

Figure 3 Removing the Eject Chute Assembly

REP 21.29 (Pro) Finisher PWB

Parts List on

Removal

NOTE: *When turning the power OFF, turn the Power Switch OFF first, and then the Main Power Switch.*

1. Press the **Job Status** button to check that there are no jobs in progress.
2. Switch off the power and disconnect the power cord.
3. Check and record Finisher software version (GP 6).
4. Remove the Finisher Rear Upper Cover (REP 21.2).
5. Remove the Finisher Rear Lower Cover (REP 21.3).
6. Remove the Finisher PWB Cover (4 screws).
7. Remove the Finisher PWB (Figure 1).

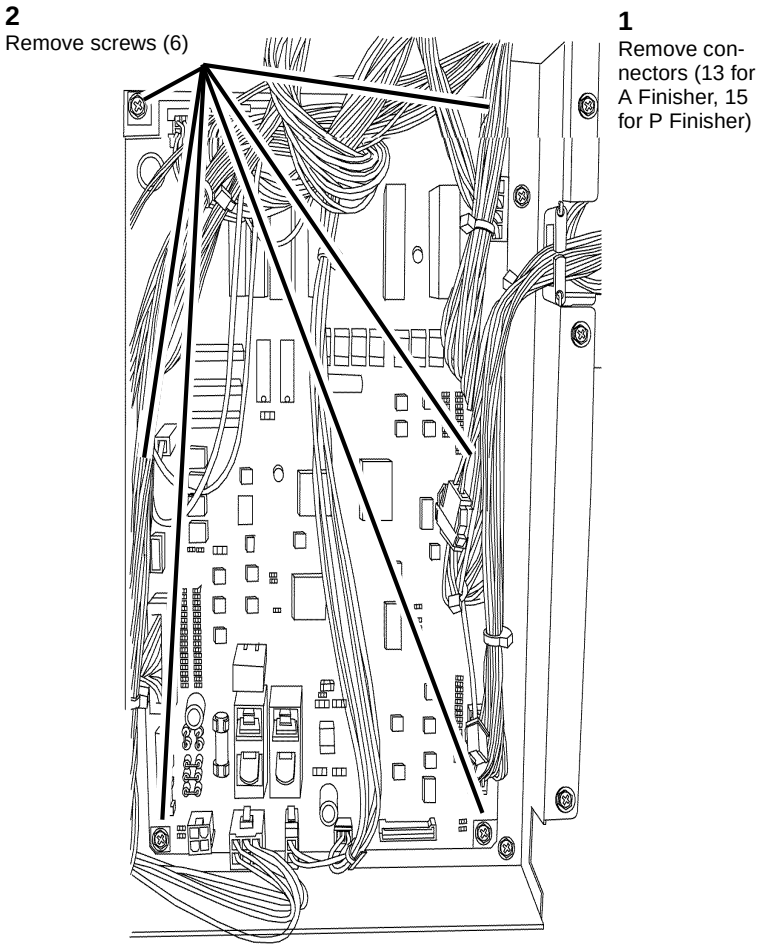

Figure 1 Finisher PWB

Replacement

1. Check Finisher software version (GP 6) and compare with software version recorded in Step 1 of the removal procedure.
2. If the current software version is lower than the previous version, load the Finisher software (GP 9). Use single platform, not All-in 1file.
3. Check the following NVM locations and reset if required to match the Finisher configuration:
   - 763-001 - Finisher Type
     - 3 = w/o Booklet Maker
     - 4 = w/ Booklet Maker
   - 763-011 - Hole Punch Configuration
     - 3 = 2/.3 hole
     - 4 = 2/4 hole
   - 763-012 - Finisher configuration
     - 0 = w/o Booklet Maker
     - 1 = w/ Booklet Maker

REP 22.1 Integrated Office Finisher

Parts List on PL 22.1

Removal

NOTE: *When turning the power OFF, turn the Power Switch OFF first, and then the Main Power Switch.*

1. Press the **Job Status** button to check that there are no jobs in progress.
2. Switch off the power and disconnect the power cord.
3. Switch off the power and disconnect the power cord
4. Disconnect the Integrated Office Finisher Wire Harness (Figure 1):
   (1)Remove Cover.
   (2)Remove Clamp.
   (3)Disconnect Connectors (2).

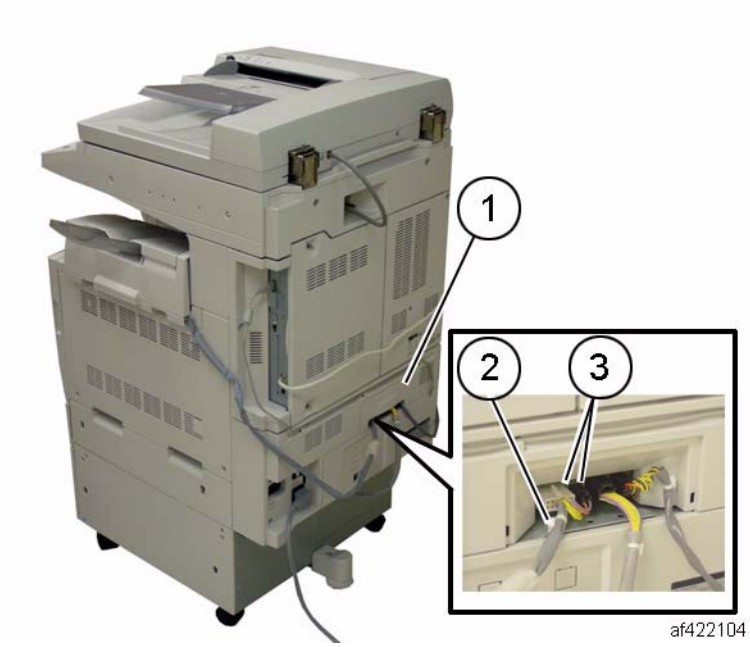

Figure 1 Disconnecting harness

5. Loosen the Thumb Screws (2) (Figure 2):

Figure 2 Loosen the Thumb Screws

6. Remove the Integrated Office Finisher.

Replacement

1. Reverse the removal procedure for replacement.

REP 22.2 (Int) Paddle Belt

Parts List on PL 22.3

Removal

NOTE: *When turning the power OFF, turn the Power Switch OFF first, and then the Main Power Switch.*

1. Press the **Job Status** button to check that there are no jobs in progress.
2. Switch off the power and disconnect the power cord
3. Remove the Integrated Office Finisher from the machine (REP 22.1).
4. Remove the Compiler Assembly (REP 22.20)
5. Remove the front Pulley (Figure 1):
   (1)Remove E-Clip.
   (2)Remove Flange.
   (3)Remove Belt from Pulley.
   (4)Remove Pulley.

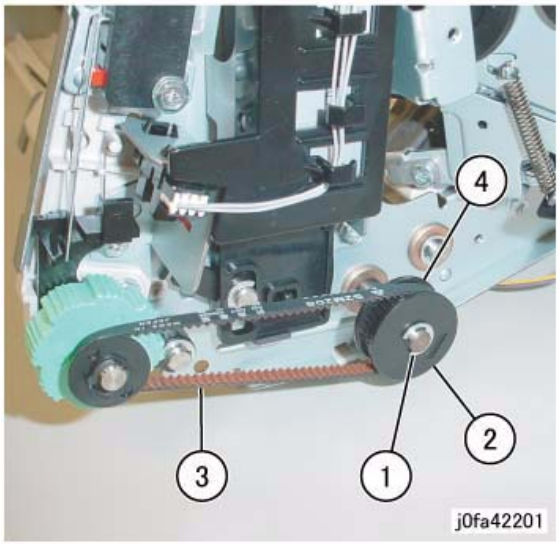

Figure 1 Removing the Pulley

6. Remove the Front Bearing (Figure 2):
   (1)Remove Bearing.

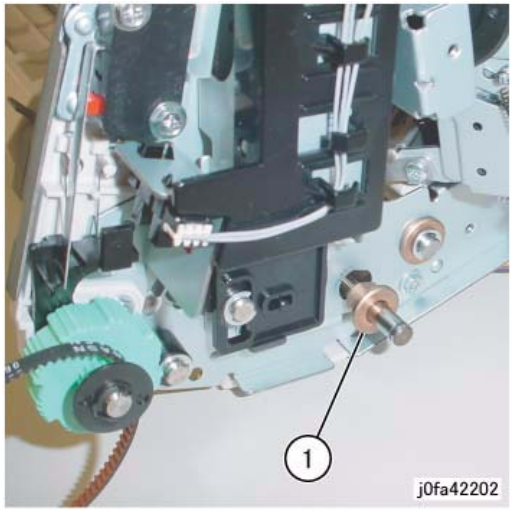

Figure 2 Removing the Front Bearing

7. Remove the Rear Gear (Figure 3)
   (1)Remove E-Clip.
   (2)Remove Gear.

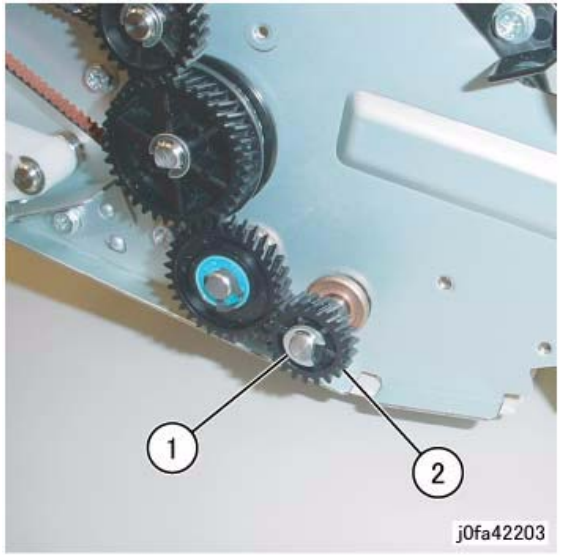

Figure 3 Removing the Gear

8. Remove the Rear Bearing (Figure 4):

(1)Remove Bearing.

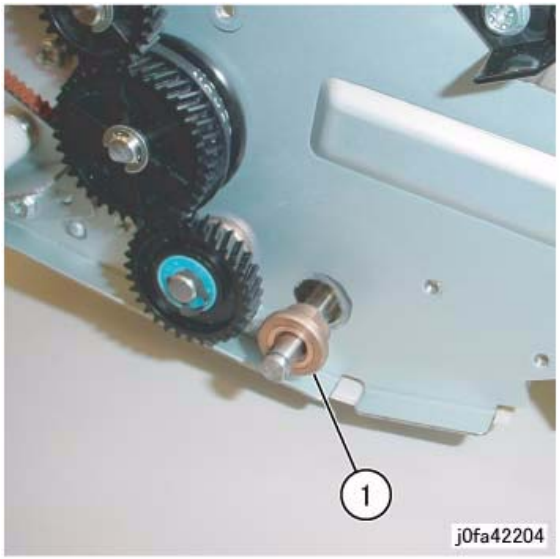

Figure 4 Removing the Bearing

9. Remove the Paddle Link Assembly (Figure 5):
   (1)Remove Paddle Link Assembly.

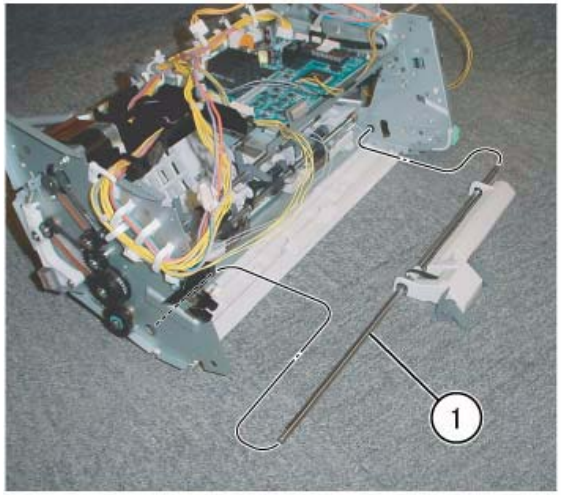

Figure 5 Removing the Paddle Link Assembly

10. Remove the Bearing (Figure 6):
    (1)Remove E-Clip.
    (2)Remove Bearing.

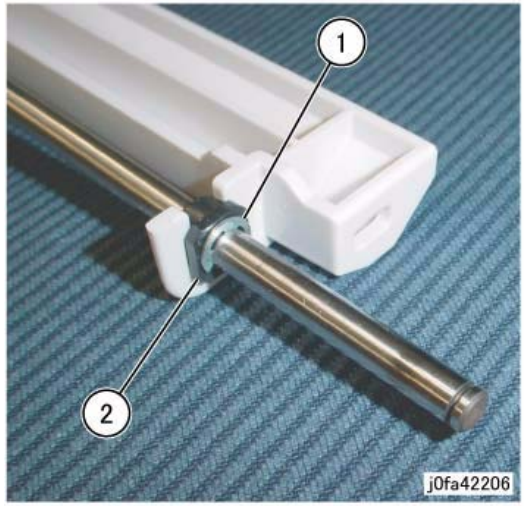

Figure 6 Removing Bearing

11. Remove the Shaft Assembly (Figure 7):
    (1)Remove Paddle Belt from Pulley.
    (2)Remove Shaft Assembly in the direction of the arrow.

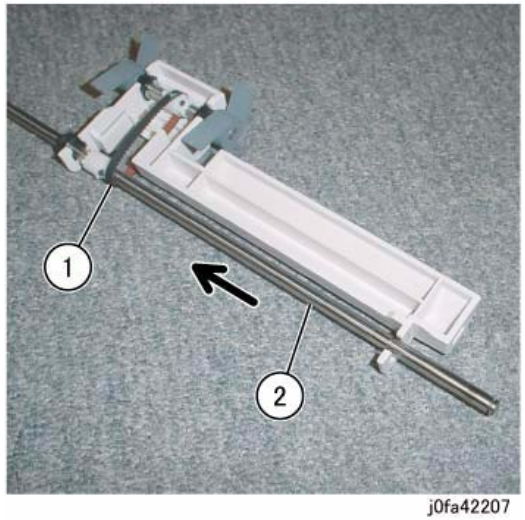

Figure 7 Removing Shaft Assembly

12. Remove the Paddle Belt (Figure 8):
    (1)Remove E-Clips (2).
    (2)Move Bearings (2) in the direction of the arrow.
    (3)Remove Sub Paddle Shaft Assembly.
    (4)Remove Paddle Belt.

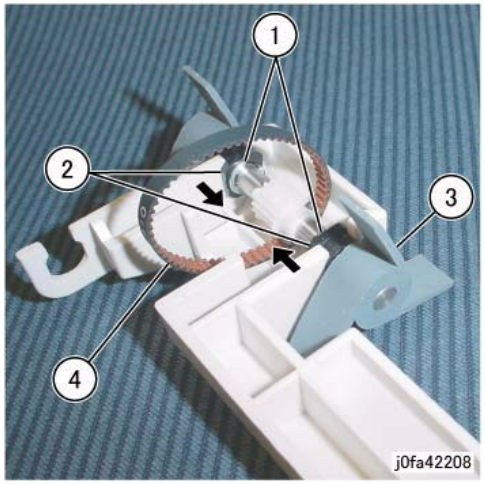

Figure 8 Removing the Paddle Belt

Replacement

1. Reverse the removal procedure for replacement.
2. Install the Paddle Link Assembly as shown in Figure 9.

Figure 9 Installing the Paddle Link Assembly

REP 22.3 (Int) Sub Paddle Solenoid

Parts List on PL 22.3

Removal

NOTE: *When turning the power OFF, turn the Power Switch OFF first, and then the Main Power Switch.*

1. Press the **Job Status** button to check that there are no jobs in progress.
2. Switch off the power and disconnect the power cord.
3. Remove the Integrated Office Finisher from the machine (REP 22.1).
4. Remove the Inner Front Cover (PL 22.1)
5. Turn over the Integrated Office Finisher.
6. Remove the Bottom Cover (PL 22.2)
7. Disconnect the Connector (Figure 1):
    (1)Release Clamps (3) and remove the wire.
    (2)Disconnect Connector.

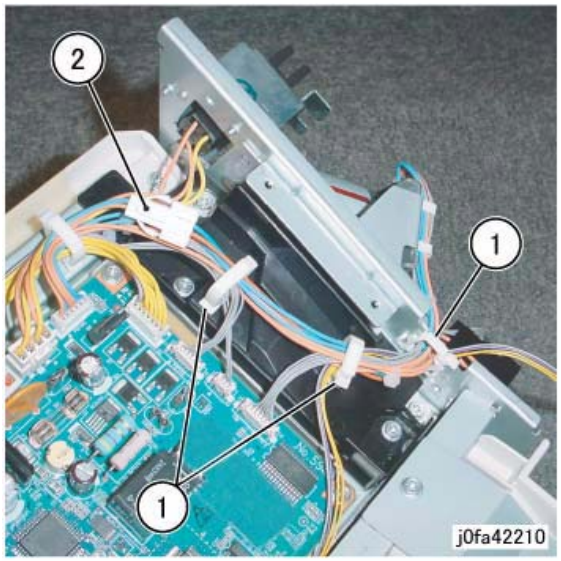

Figure 1 Disconnecting the Connector

8. Turn over the Integrated Office Finisher.
9. Remove the Sub Paddle Solenoid Assembly (Figure 2):
    (1)Disconnect Connector.
    (2)Release Wire from Hook.
    (3)Remove Screws (2).
    (4)Remove Sub Paddle Solenoid Assembly.

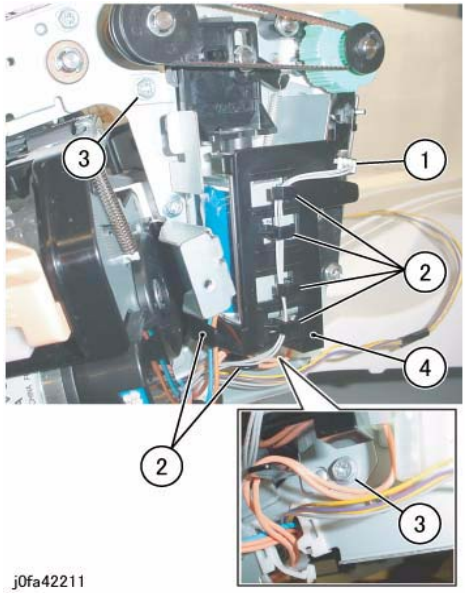

Figure 2 Removing the Sub Paddle Solenoid Assembly

10. Remove the Support (Figure 3):
    (1)Remove Screw.
    (2)Remove Support.

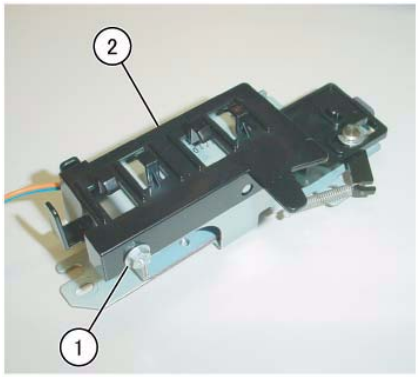

Figure 3 Removing the Support

11. Remove the Sub Paddle Solenoid (Figure 4):
    (1)Remove Screws (2).
    (2)Remove the Sub Paddle Solenoid.

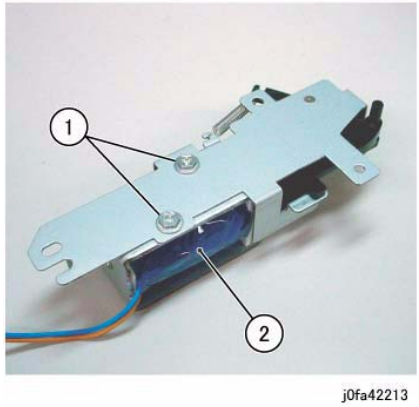

Figure 4 Removing the Sub Paddle Solenoid

Replacement

1. Reverse the removal procedure for replacement.
2. Install the Sub Paddle Assembly as shown in Figure 5.

Figure 5 Installing the Sub Paddle Assembly

REP 22.5 (Int) Staple Assembly

Parts List on PL 22.4

Removal

NOTE: *When turning the power OFF, turn the Power Switch OFF first, and then the Main Power Switch.*

1. Press the **Job Status** button to check that there are no jobs in progress.
2. Switch off the power and disconnect the power cord.
3. Remove the Integrated Office Finisher from the machine (REP 22.1).
4. Remove the Inner Front Cover (PL 22.1)
5. Remove the Staple Assembly (Figure 1):
   (1)Remove Clamps (2).
   (2)Disconnect Connectors (2).
   (3)Remove Screws (2).
   (4)Remove Staple Assembly.

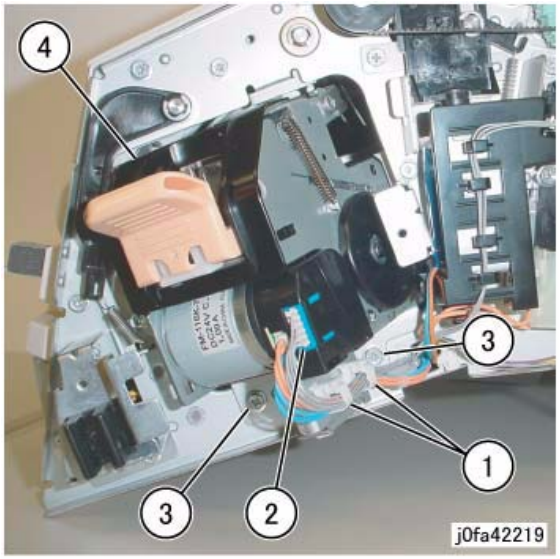

Figure 1 Removing the Staple Assembly

6. Remove the Bracket from the Staple Assembly (Figure 2):
   (1)Remove Screws (2).
   (2)Remove Bracket.

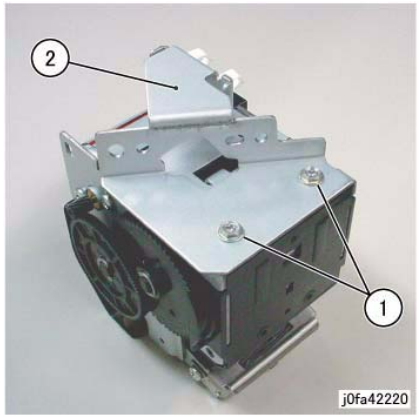

Figure 2 Removing the Bracket

Replacement

1. Reverse the removal procedure for replacement.

REP 22.6 (Int) Set Clamp Home Sensor

Parts List on PL 22.4

Removal

NOTE: *When turning the power OFF, turn the Power Switch OFF first, and then the Main Power Switch.*

1. Press the **Job Status** button to check that there are no jobs in progress.
2. Switch off the power and disconnect the power cord.
3. Remove the Integrated Office Finisher from the machine (REP 22.1).
4. Remove the Rear Cover (PL 22.1)
5. Disconnect the Connector (Figure 1):
   (1)Release Clamp and remove the wire.
   (2)Disconnect Connector.

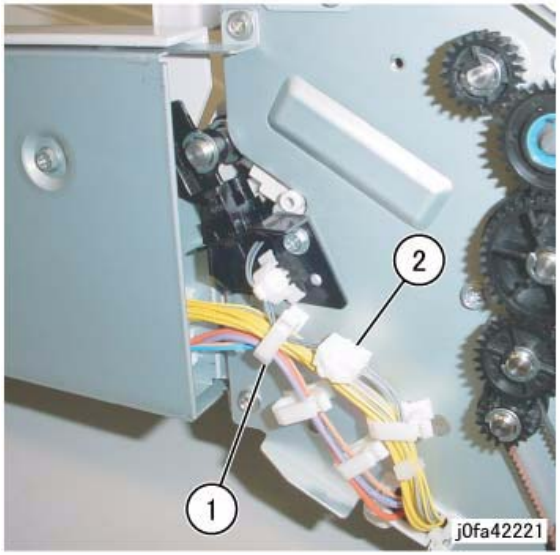

Figure 1 Disconnecting Connector

6. Remove the Set Clamp Home Sensor Assembly (Figure 2):
   (1)Remove Screw.
   (2)Remove Set Clamp Home Sensor Assembly.

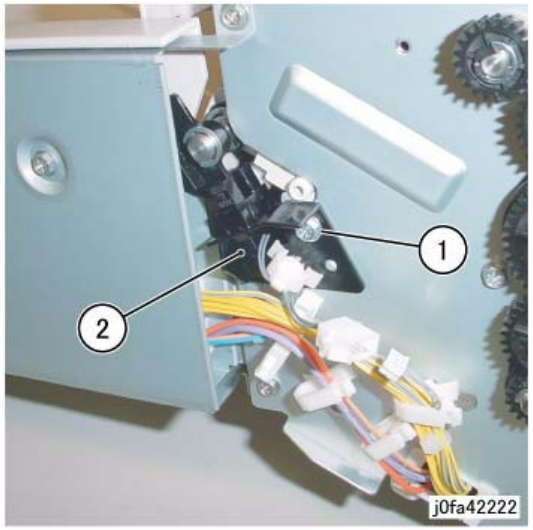

Figure 2 Removing the Set Clamp Home Sensor Assembly

7. Remove the Set Clamp Home Sensor (Figure 3):
   (1)Remove Set Clamp Home Sensor from Bracket.
   (2)Disconnect Connector.

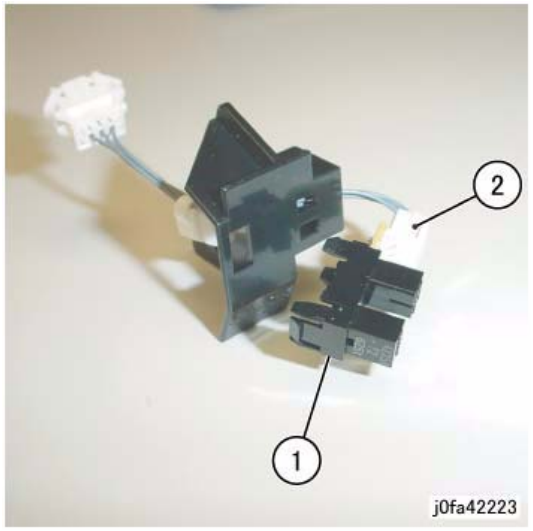

Figure 3 Removing the Set Clamp Home Sensor

Replacement

1. Reverse the removal procedure for replacement.

REP 22.7 (Int) Exit Roll Assembly

Parts List on PL 22.4

Removal

NOTE: *When turning the power OFF, turn the Power Switch OFF first, and then the Main Power Switch.*

1. Press the **Job Status** button to check that there are no jobs in progress.
2. Switch off the power and disconnect the power cord.
3. Remove the Integrated Office Finisher from the machine (REP 22.1).
4. Remove the Inner Front Cover (PL 22.1)
5. Remove the Rear Cover (PL 22.1)
6. Remove the Left Cover (PL 22.2)
7. Remove the Upper Frame Section (Figure 1):
   (1)Remove Screw and Bracket.
   (2)Remove Screws (2).
   (3)Remove Screw and Bracket.
   (4)Remove Screws (2).
   (5)Remove the Upper Frame Section

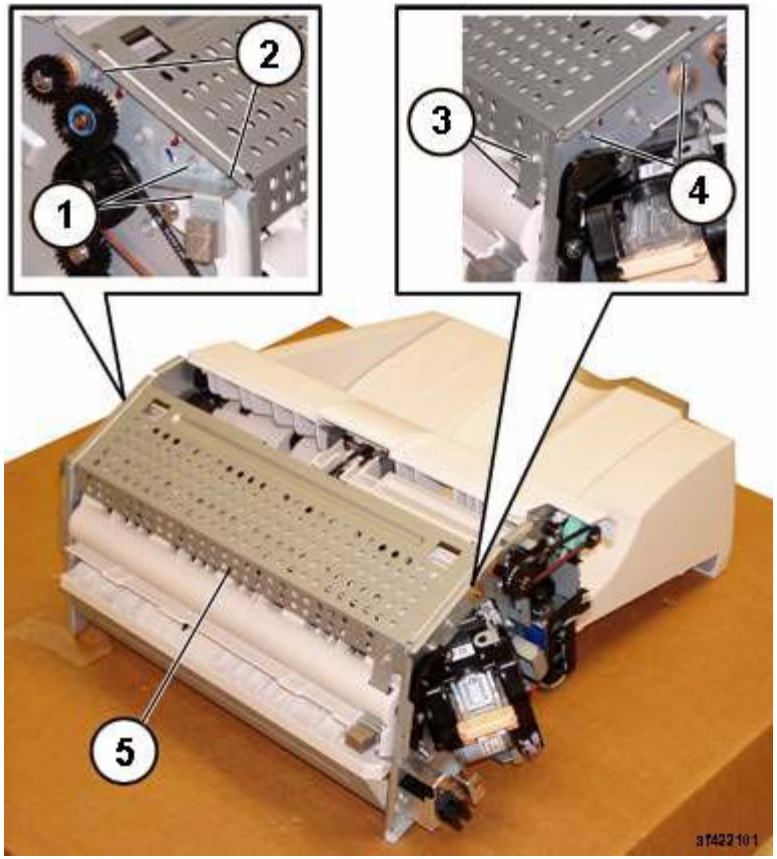

Figure 1 Removing the Upper Frame Section

NOTE: *The screws do not thread into the Upper Chute. They are used like pins to secure the Upper Chute in place.*

8. Remove the Upper Chute Assembly (Figure 2):
   (1)Remove Screws (2).
   (2)Remove Screw.
   (3)Carefully Remove the Upper Chute Assembly.

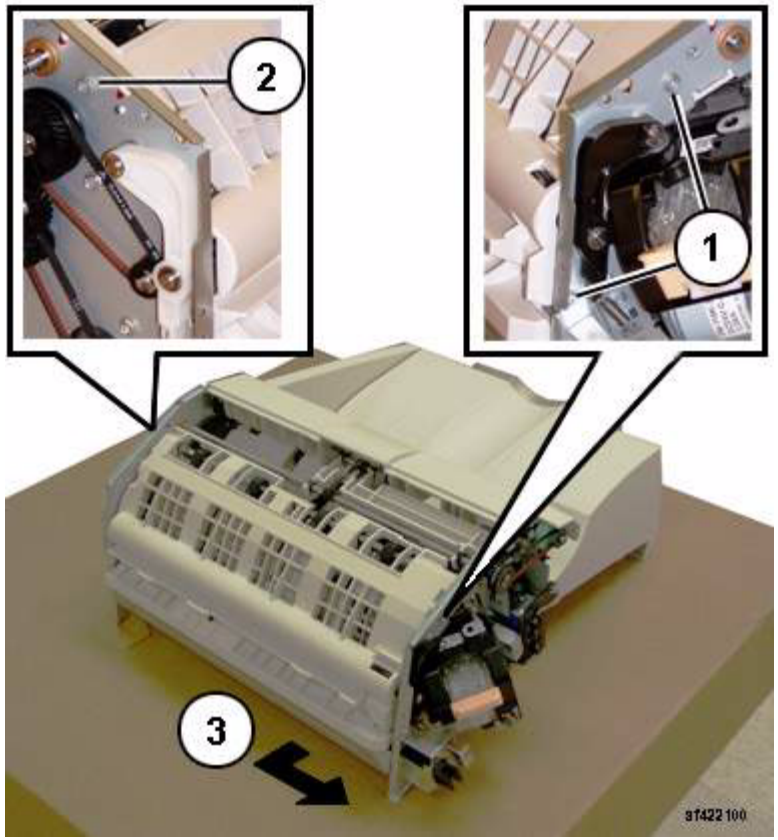

Figure 2 Removing the Upper Chute Assembly

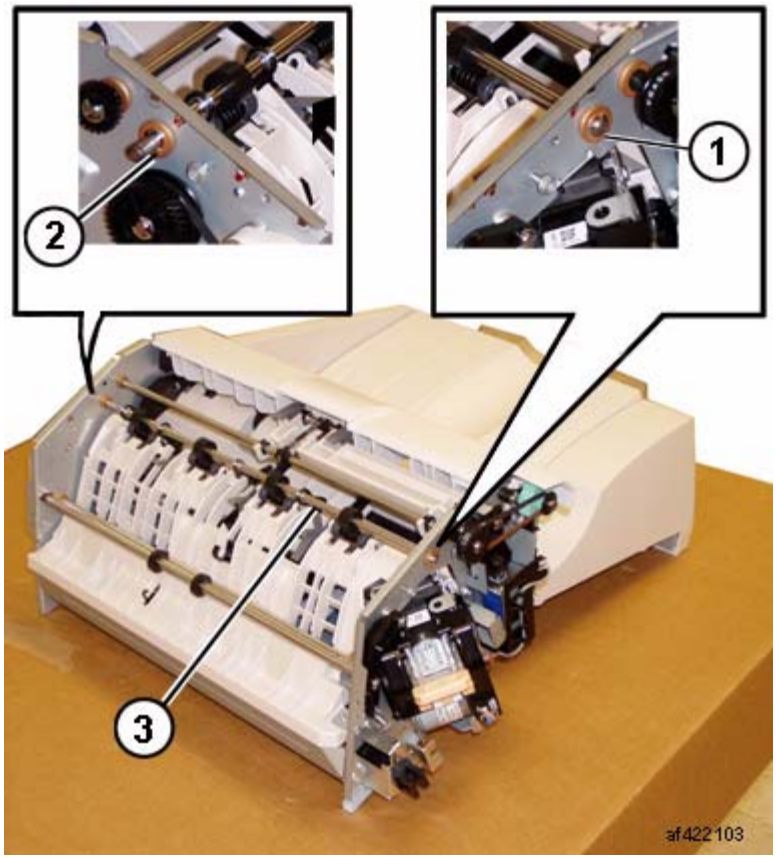

Figure 3 Removing the Exit Roll Assembly

9. Remove the Exit Roll Assembly (Figure 3):
   (1)Remove E-ring and Bearing.
   (2)Remove E-ring and Bearing.
   (3)Remove the Exit Roll Assembly.

Replacement

1. Reverse the removal procedure for replacement.

   NOTE: *Ensure that the Paper Guides on the Upper Chute (PL 22.6) are not folded back on top of the Exit Roll Assembly.*

REP 22.8 (Int) Pinch Roll

Parts List on PL 22.5

Removal

NOTE: *When turning the power OFF, turn the Power Switch OFF first, and then the Main Power Switch.*

1. Press the **Job Status** button to check that there are no jobs in progress.
2. Switch off the power and disconnect the power cord.
3. Remove the Integrated Office Finisher from the machine (REP 22.1).
4. Remove the Compiler Assembly (REP 22.20)
5. Remove the Pinch Roll (Figure 1):
   (1)Raise Springs (4) in the direction of the arrow.
   (2)Remove Pinch Rolls (4).

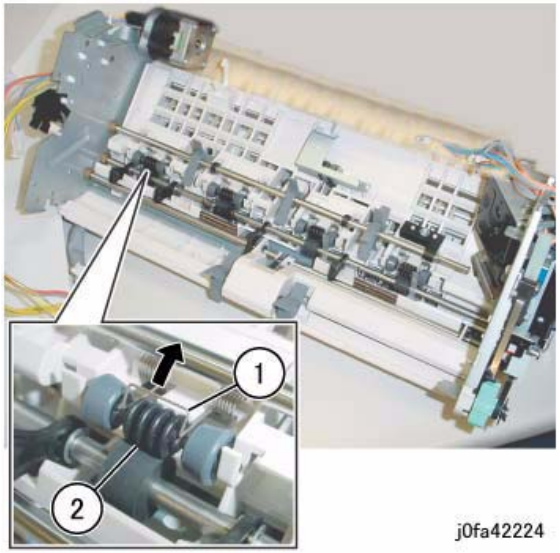

Figure 1 Removing the Pinch Rolls

Replacement

1. Reverse the removal procedure for replacement.

REP 22.9 (Int) Finisher Entrance Sensor

Parts List on PL 22.5

Removal

NOTE: *When turning the power OFF, turn the Power Switch OFF first, and then the Main Power Switch.*

1. Press the **Job Status** button to check that there are no jobs in progress.
2. Switch off the power and disconnect the power cord.
3. Remove the Integrated Office Finisher from the machine (REP 22.1).
4. Turn over the Integrated Office Finisher.
5. Remove the Bottom Cover (PL 22.2)
6. Remove the Connector Bracket (Figure 1):
   (1)Release Clamps (3) and remove the wire.
   (2)Disconnect Connectors (5).
   (3)Remove Screws (2).
   (4)Remove Connector Bracket.

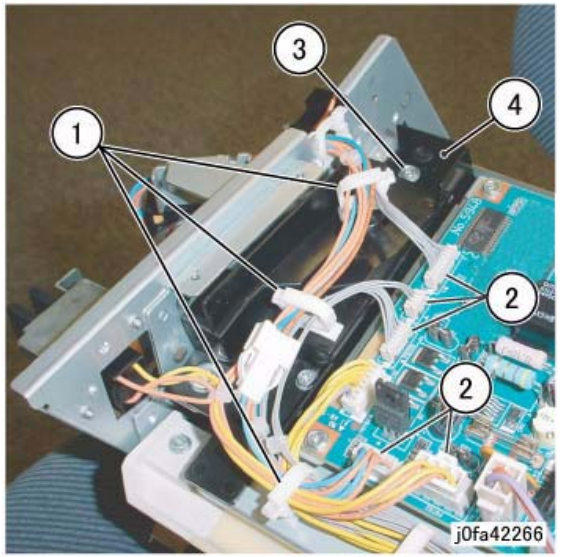

Figure 1 Removing the Connector Bracket

7. Remove the Bottom Plate (Figure 2):
   (1)Release Clamps (5) and remove the wire.
   (2)Disconnect Connectors (8).
   (3)Remove Wire from Hook.
   (4)Remove Screws (4).
   (5)Remove Bottom Plate.

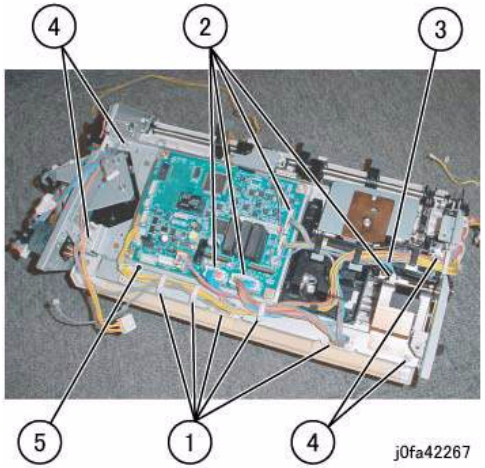

Figure 2 Removing the Bottom Plate

8. Remove the Finisher Entrance Sensor Assembly (Figure 3):
   (1)Disconnect Connector.
   (2)Remove Self-tapping Screw.
   (3)Remove Finisher Entrance Sensor Assembly.

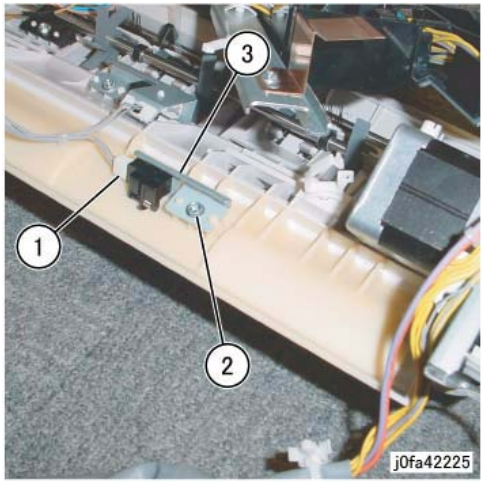

Figure 3 Removing the Finisher Entrance Sensor Assembly

9. Remove the Finisher Entrance Sensor (Figure 4):
   (1)Remove Finisher Entrance Sensor from Bracket.

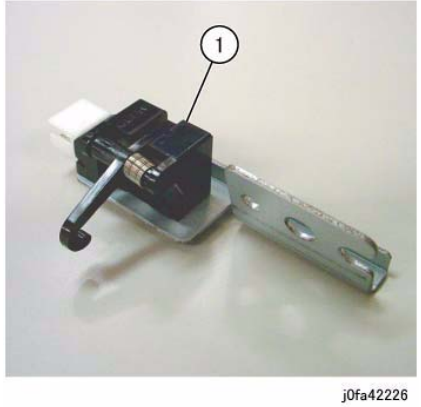

Figure 4 Removing the Finisher Entrance Sensor

Replacement

1. Reverse the removal procedure for replacement.

REP 22.10 (Int) Compiler Exit Sensor

Parts List on PL 22.5

Removal

NOTE: *When turning the power OFF, turn the Power Switch OFF first, and then the Main Power Switch.*

1. Press the **Job Status** button to check that there are no jobs in progress.
2. Switch off the power and disconnect the power cord.
3. Remove the Integrated Office Finisher from the machine (REP 22.1).
4. Turn over the Integrated Office Finisher.
5. Remove the Bottom Cover (PL 22.2)
6. Remove the Connector Bracket (Figure 1):
   (1)Release Clamps (3) and remove the wire.
   (2)Disconnect Connectors (5).
   (3)Remove Screws (2).
   (4)Remove Connector Bracket.

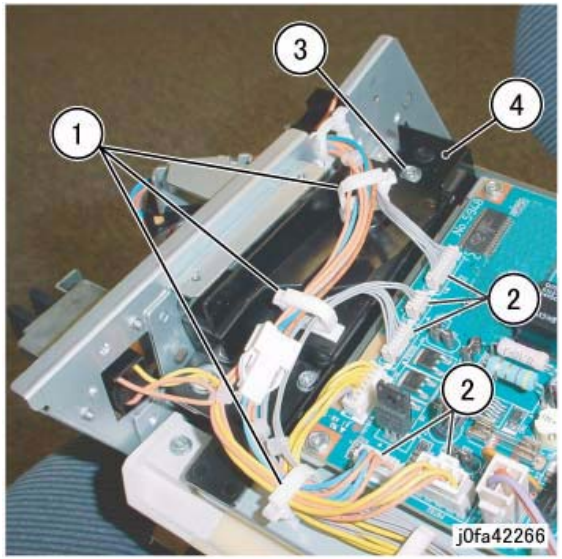

Figure 1 Removing the Connector Bracket

7. Remove the Bottom Plate (Figure 2):
   (1)Release Clamps (5) and remove the wire.
   (2)Disconnect Connectors (8).
   (3)Release Wire from Hook.
   (4)Remove Screws (4).
   (5)Remove Bottom Plate.

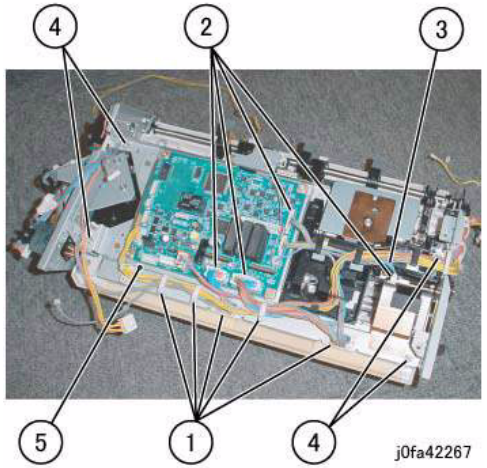

Figure 2 Removing the Bottom Plate

8. Remove the Compiler Exit Sensor Assembly (Figure 3):
   (1)Remove Screw.
   (2)Remove Compiler Exit Sensor Assembly.

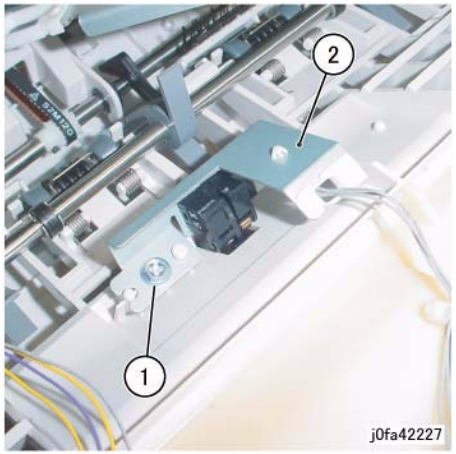

Figure 3 Removing the Compiler Exit Sensor Assembly

9. Remove the Compiler Exit Sensor (Figure 4):
   (1)Release Clamps (2) and remove the wire.
   (2)Disconnect Connector.
   (3)Remove Compiler Exit Sensor.

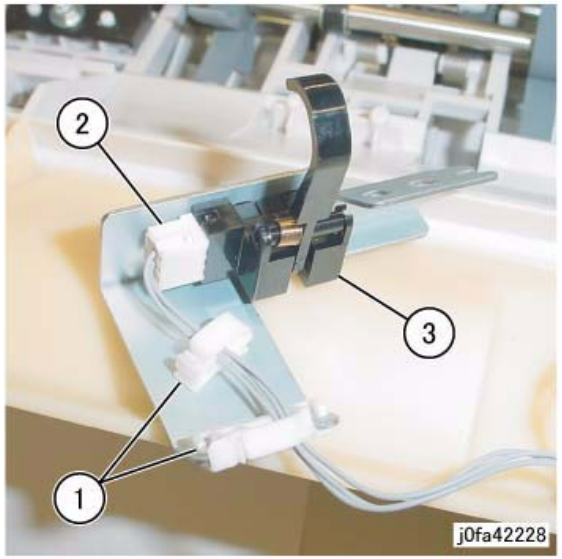

Figure 4 Removing the Compiler Exit Sensor

Replacement

1. Reverse the removal procedure for replacement.

REP 22.11 (Int) Main Paddle Shaft Assembly

Parts List on PL 22.5

Removal

NOTE: *When turning the power OFF, turn the Power Switch OFF first, and then the Main Power Switch.*

1. Press the **Job Status** button to check that there are no jobs in progress.
2. Switch off the power and disconnect the power cord.
3. Remove the Integrated Office Finisher from the machine (REP 22.1).
4. Remove the Compiler Assembly (REP 22.20)
5. Remove the Gear (Figure 1):
   (1)Remove E-Clip.
   (2)Remove Gear.
   (3)Remove KL-Clip.
   (4)Remove Gear.

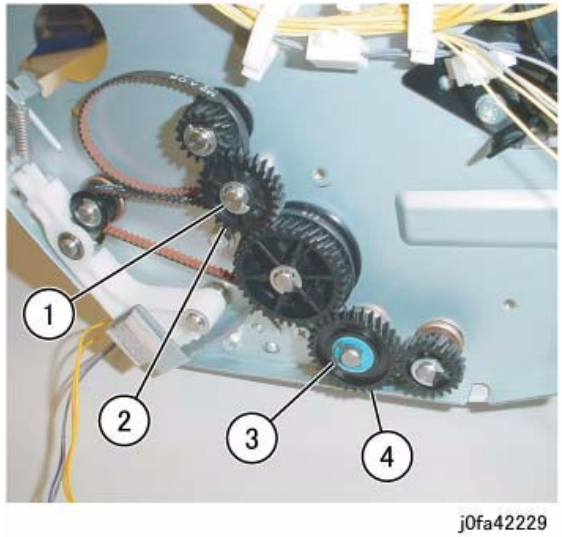

Figure 1 Removing the Gear

6. Remove the Gear Pulley (Figure 2):
   (1)Remove E-Clip.
   (2)Remove Gear.
   (3)Remove Flange.

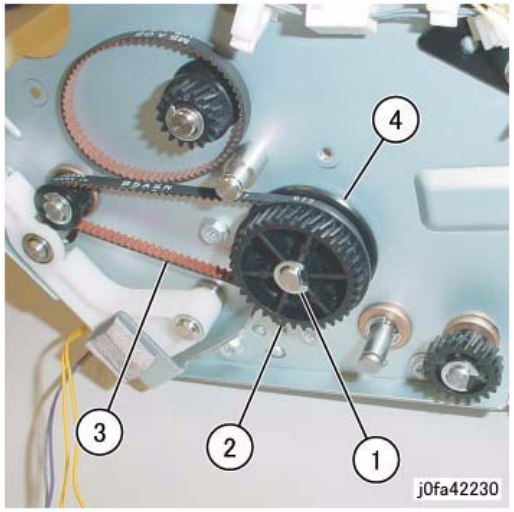

Figure 2 Removing the Gear Pulley

7. Remove the Bearing (Figure 3):
   (1)Remove Bearing.

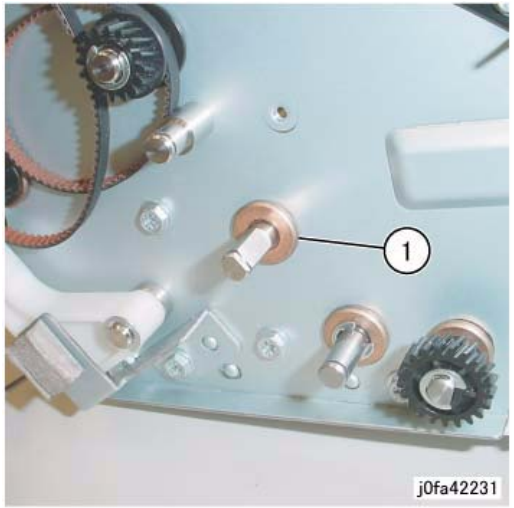

Figure 3 Removing the Bearing

8. Remove the Support Bearing from the Entrance Lower Chute Assembly (Figure 4):
   (1)Remove Self-tapping Screw.
   (2)Remove Support Bearing.

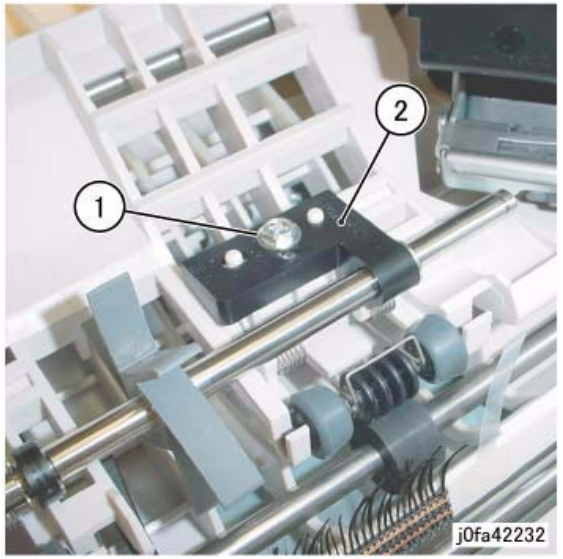

Figure 4 Removing the Support Bearing

9. Remove the Main Paddle Shaft Assembly (Figure 5):
   (1)Remove Main Paddle Shaft Assembly.

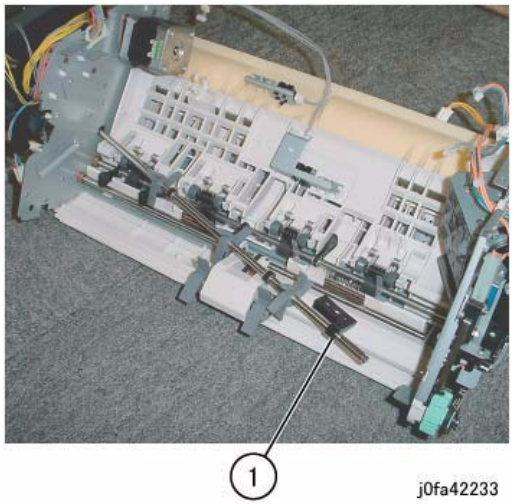

Figure 5 Removing the Main Paddle Shaft Assembly

10. Remove the Support Bearing from the Main Paddle Shaft Assembly (Figure 6):
    (1)Remove E-Clip.

(2)Remove Support Bearing.

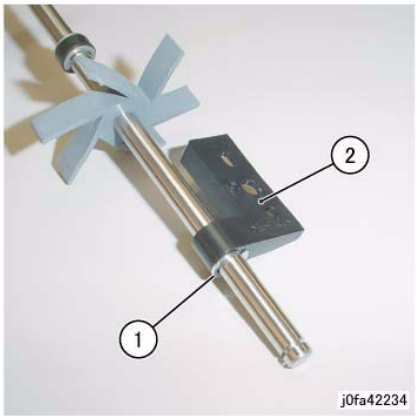

Figure 6 Removing the Support Bearing

Replacement

1. Reverse the removal procedure for replacement.

REP 22.12 (Int) Lower Chute Assembly

Parts List on PL 22.5

Removal

NOTE: *When turning the power OFF, turn the Power Switch OFF first, and then the Main Power Switch.*

1. Press the **Job Status** button to check that there are no jobs in progress.
2. Switch off the power and disconnect the power cord.
3. Remove the Integrated Office Finisher from the machine (REP 22.1).
4. Remove the Compiler Assembly (REP 22.20)
5. Turn over the Integrated Office Finisher (Transport).
6. Remove the Stapler Assembly (Figure 1):
   (1)Release Clamps (2) and remove the wire.
   (2)Disconnect Connectors (2).
   (3)Remove Screws (2).
   (4)Remove Stapler Assembly.

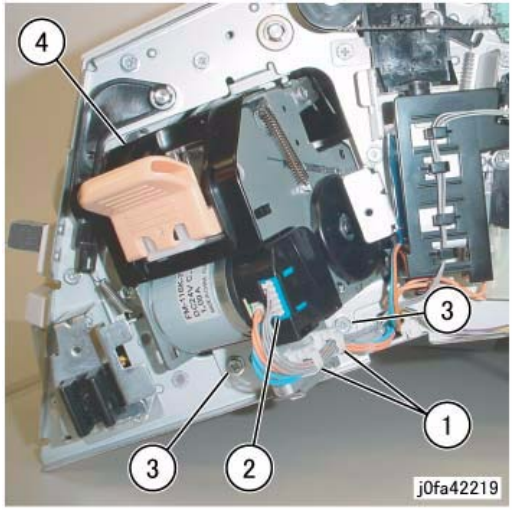

Figure 1 Removing the Stapler Assembly

7. Turn over the Integrated Office Finisher.
8. Remove the Transport Motor (Figure 2):
   (1)Remove Screws (2).
   (2)Remove Belt from Pulley.
   (3)Remove Transport Motor.

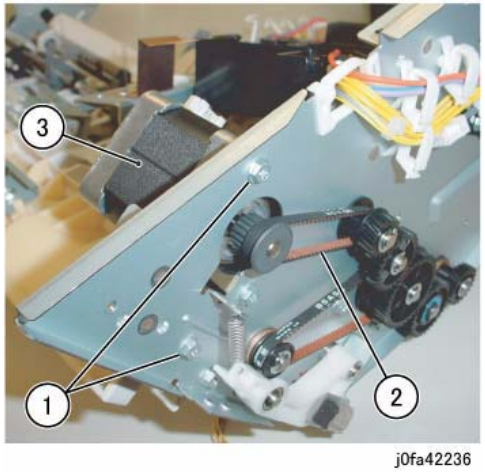

Figure 2 Removing the Transport Motor

9. Remove the Gear (Figure 3):
   (1)Remove E-Clip.
   (2)Remove Gear.
   (3)Remove KL-Clip.
   (4)Remove Gear.

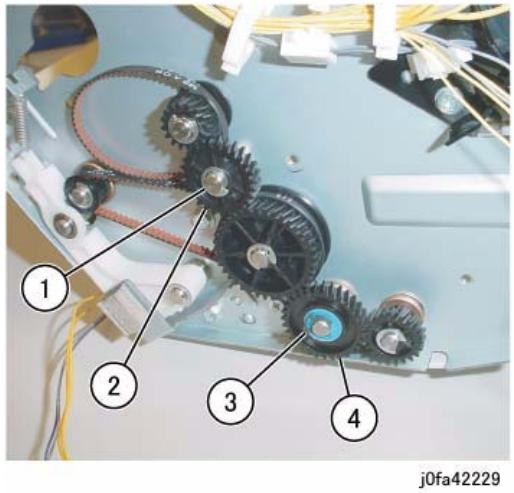

Figure 3 Removing the Gear

10. Remove the Gear Pulley (Figure 4):
    (1)Remove E-Clip.
    (2)Remove Gear.
    (3)Remove Pulley from Belt.
    (4)Remove Flange.

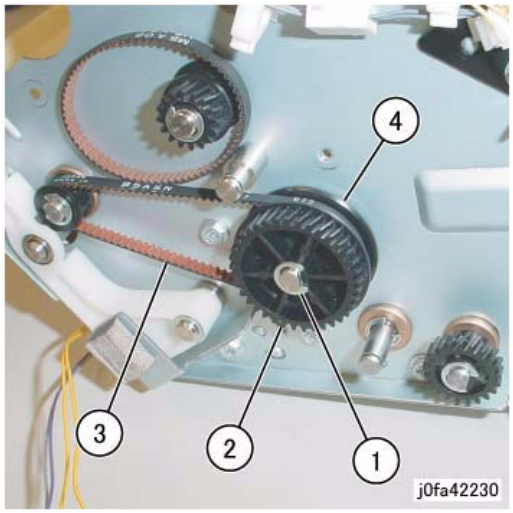

Figure 4 Removing the Gear Pulley

11. Remove the Bearing (Figure 5):
    (1)Remove the Bearing.

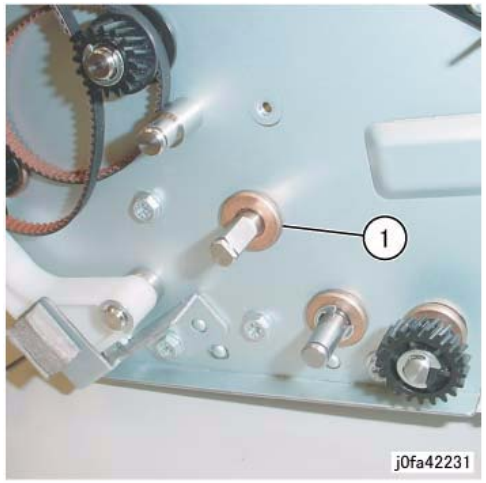

Figure 5 Removing the Bearing

12. Remove the Entrance Lower Chute Assembly (Figure 6):
    (1)Remove Screws (2).

(2)Loosen Screws (2).

(3)Remove Entrance Lower Chute Assembly.

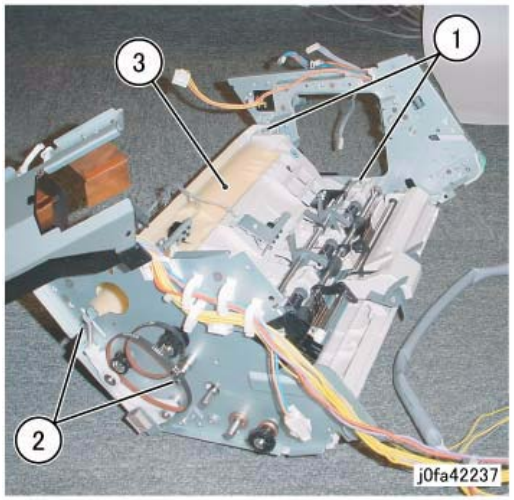

Figure 6 Removing the Entrance Lower Chute Assembly

Replacement

1. Reverse the removal procedure for replacement.

REP 22.13 (Int) Entrance Roll Assembly

Parts List on PL 22.6

Removal

NOTE: *When turning the power OFF, turn the Power Switch OFF first, and then the Main Power Switch.*

1. Press the **Job Status** button to check that there are no jobs in progress.
2. Switch off the power and disconnect the power cord.
3. Remove the Integrated Office Finisher from the machine (REP 22.1).
4. Remove the Inner Front Cover (PL 22.1)
5. Remove the Rear Cover (PL 22.1)
6. Remove the Left Cover (PL 22.2)
7. Remove the Upper Frame Section (Figure 1):

   (1)Remove Screw and Bracket.

   (2)Remove Screws (2).

   (3)Remove Screw and Bracket.

   (4)Remove Screws (2).

   (5)Remove the Upper Frame Section

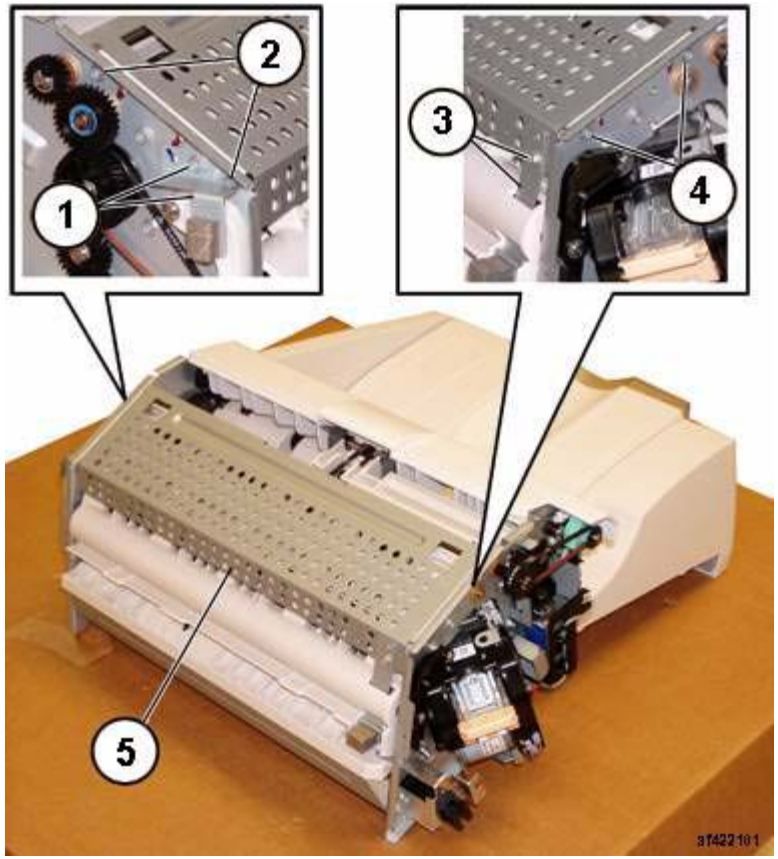

Figure 1 Removing the Upper Frame Section

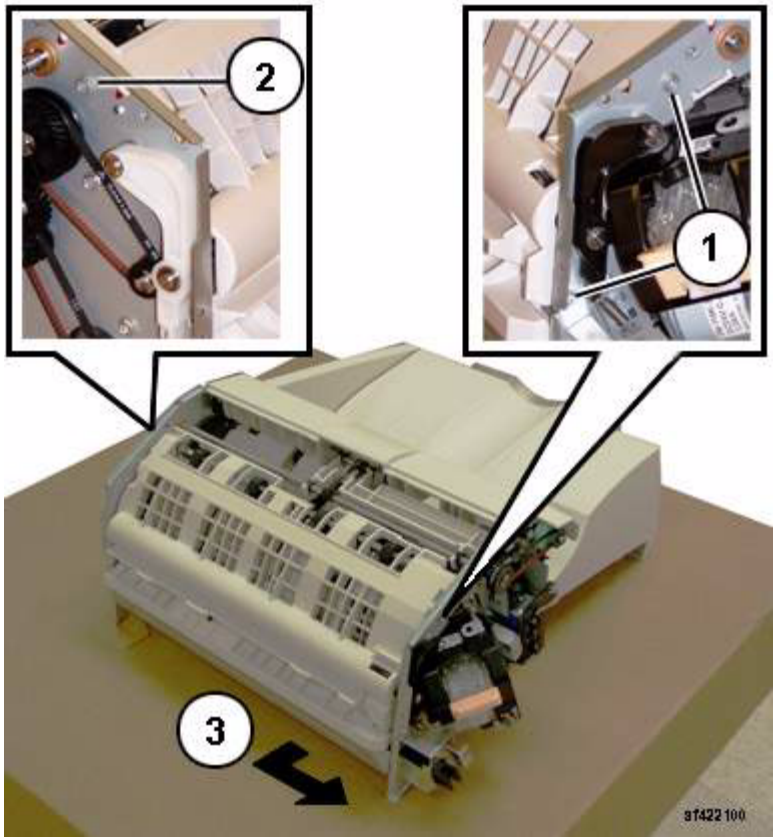

Figure 2 Removing the Upper Chute Assembly

NOTE: *The screws do not thread into the Upper Chute. They are used like pins to secure the Upper Chute in place.*

8. Remove the Upper Chute Assembly (Figure 2):
   (1)Remove Screws (2).
   (2)Remove Screw.
   (3)Carefully Remove the Upper Chute Assembly.

9. Remove the Entrance Roll Assembly (Figure 3):
   (1)Disconnect Spring.
   (2)Remove E-Rings (2).

   NOTE: *Capture the Bearing*

   (3)Remove Arm.
   (4)Slide Shaft out of the Bearing in the Arm.

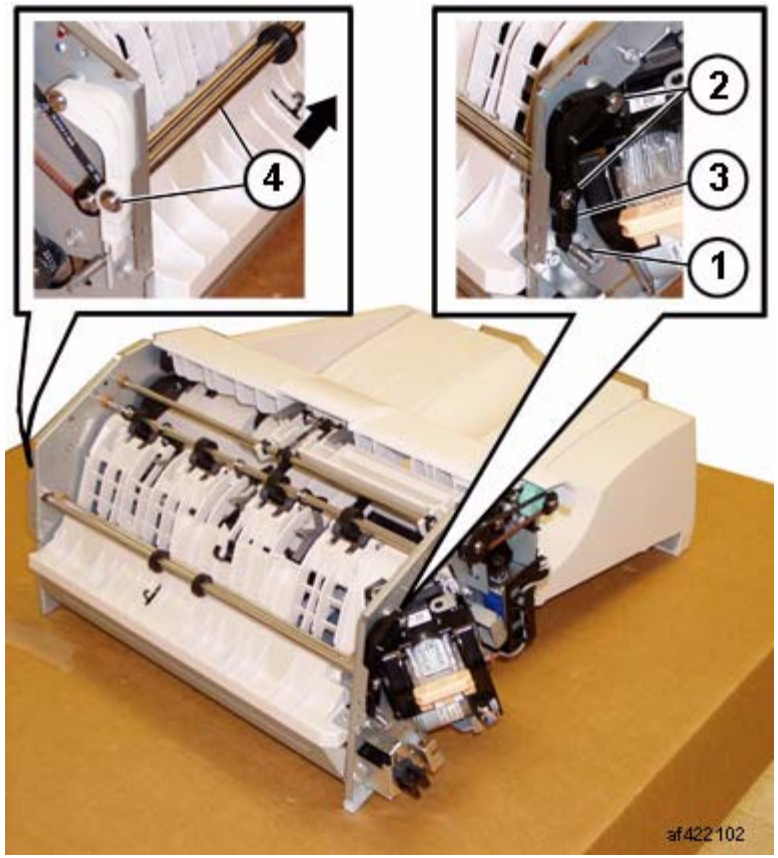

Figure 3 Removing the Gear

Replacement

1. Reverse the removal procedure for replacement.

   NOTE: *Ensure that the Paper Guides on the Upper Chute (PL 22.6) are not folded back on top of the Exit Roll Assembly.*

REP 22.14 (Int) Upper Chute Assembly

Parts List on PL 22.6

Removal

NOTE: *When turning the power OFF, turn the Power Switch OFF first, and then the Main Power Switch.*

1. Press the **Job Status** button to check that there are no jobs in progress.
2. Switch off the power and disconnect the power cord.
3. Remove the Integrated Office Finisher from the machine (REP 22.1).
4. Remove the Inner Front Cover (PL 22.1)
5. Remove the Rear Cover (PL 22.1)
6. Remove the Left Cover (PL 22.2)
7. Remove the Upper Frame Section (Figure 1):
   (1)Remove Screw and Bracket.
   (2)Remove Screws (2).
   (3)Remove Screw and Bracket.
   (4)Remove Screws (2).
   (5)Remove the Upper Frame Section

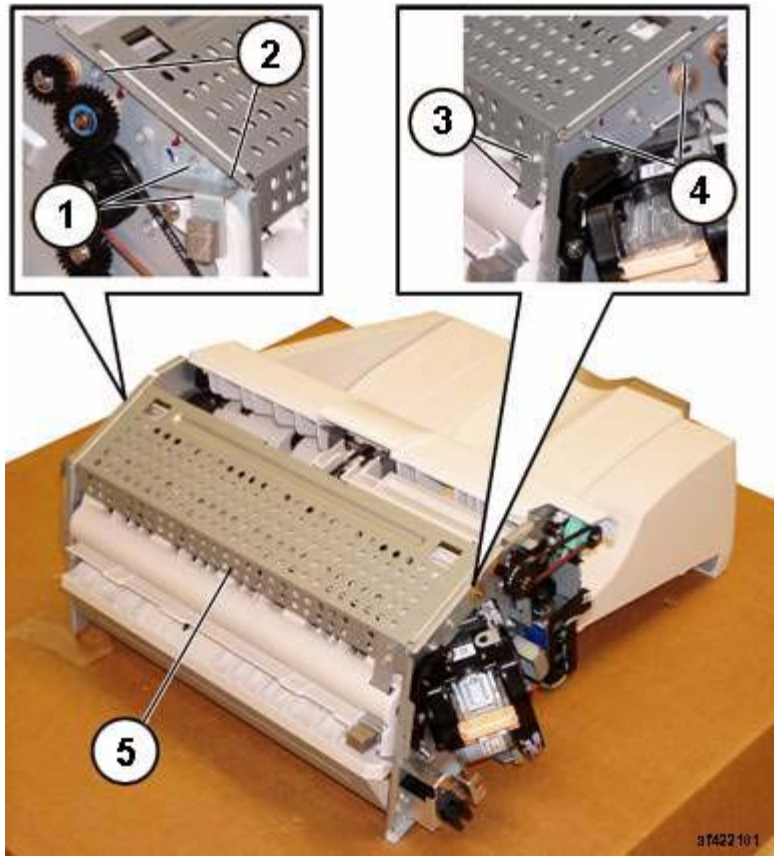

Figure 1 Removing the Upper Frame Section

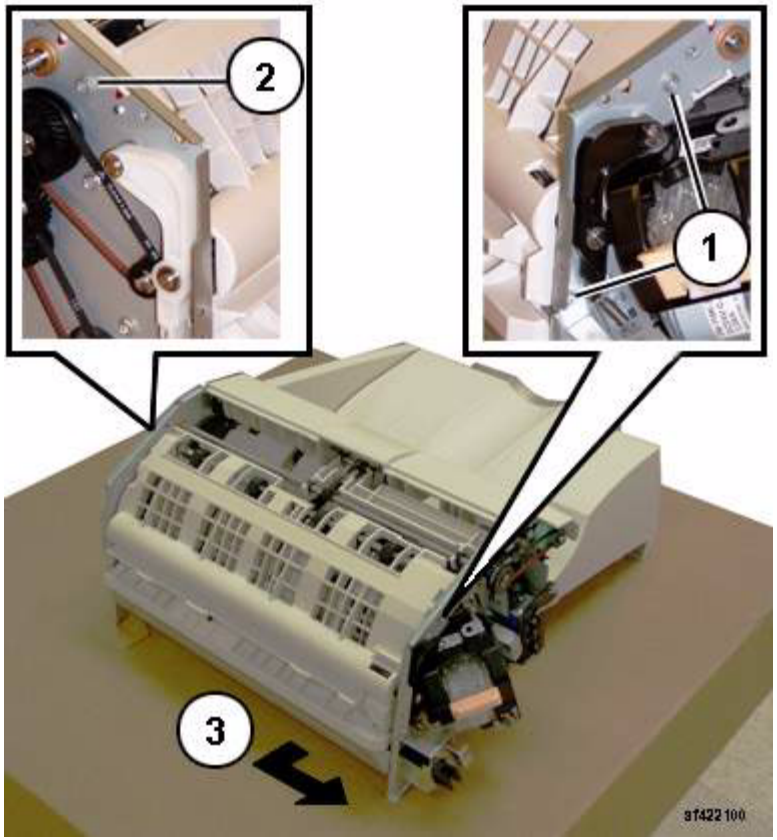

Figure 2 Removing the Upper Chute Assembly

NOTE: *The screws do not thread into the Upper Chute. They are used like pins to secure the Upper Chute in place.*

8. Remove the Upper Chute Assembly (Figure 2):
   (1)Remove Screws (2).
   (2)Remove Screw.
   (3)Carefully Remove the Upper Chute Assembly.

Replacement

1. Reverse the removal procedure for replacement.

   NOTE: *Ensure that the Paper Guides (PL 22.6) are not folded back on top of the Exit Roll Assembly.*

REP 22.15 (Int) Finisher PWB

Parts List on PL 22.7

Removal

NOTE: *When turning the power OFF, turn the Power Switch OFF first, and then the Main Power Switch.*

1. Press the **Job Status** button to check that there are no jobs in progress.
2. Switch off the power and disconnect the power cord.
3. Remove the Integrated Office Finisher from the machine (REP 22.1).
4. Turn over the Finisher.
5. Remove the Bottom Cover (PL 22.2)
6. Remove the Finisher PWB (Figure 1):
   (1)Disconnect Connectors (12).
   (2)Remove Screws (4).
   (3)Remove Finisher PWB.

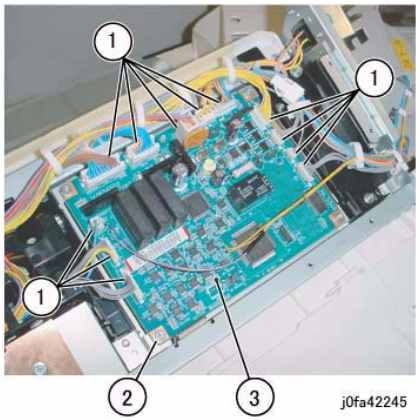

Figure 1 Removing the Finisher PWB

Replacement

1. Reverse the removal procedure for replacement.

REP 22.16 (Int) Stacker Tray Assembly

Parts List on PL 22.8

Removal

NOTE: *When turning the power OFF, turn the Power Switch OFF first, and then the Main Power Switch.*

1. Press the **Job Status** button to check that there are no jobs in progress.
2. Switch off the power and disconnect the power cord.
3. Remove the Integrated Office Finisher from the machine (REP 22.1).
4. Remove the Inner Front Cover (PL 22.1)
5. Remove the Rear Cover (PL 22.1)
6. Turn over the Integrated Office Finisher.
7. Remove the Bottom Cover (PL 22.2)
8. Remove the Tray Cover (PL 22.2)
9. Disconnect Connector (Figure 1):
   (1)Release Clamp.
   (2)Remove Clamp.
   (3)Release and remove Wire from Hook.
   (4)Release Clamp.
   (5)Disconnect Connector.
   (6)Release and remove Wire from Hook.

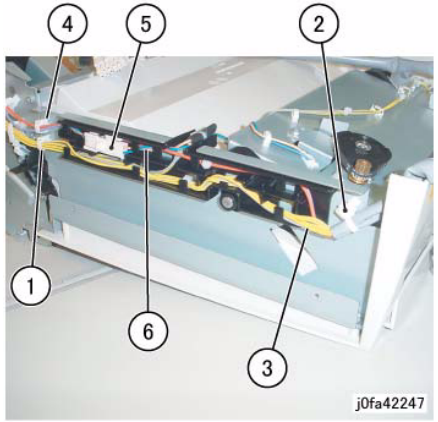

Figure 1 Disconnecting the Connector

10. Release the Clamps and the Hook to remove the wire (Figure 2):
    (1)Release Clamps (5).
    (2)Remove Wire from Hook.

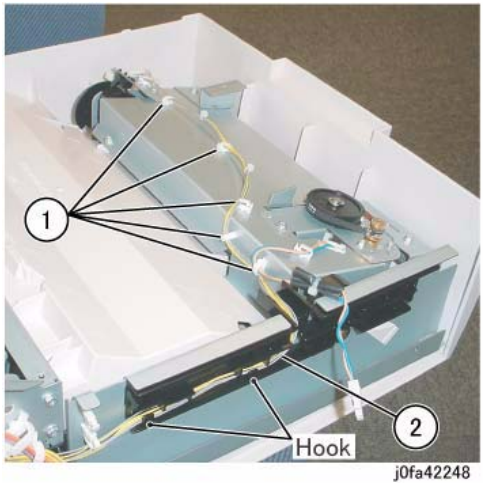

Figure 2 Disconnecting the Wire

11. Remove the Stacker Sensor Assembly (Figure 3):
    (1)Remove Screw.
    (2)Remove Stacker Sensor Assembly.
    (3)Release Clamps (4).
    (4)Disconnect Connectors (2).

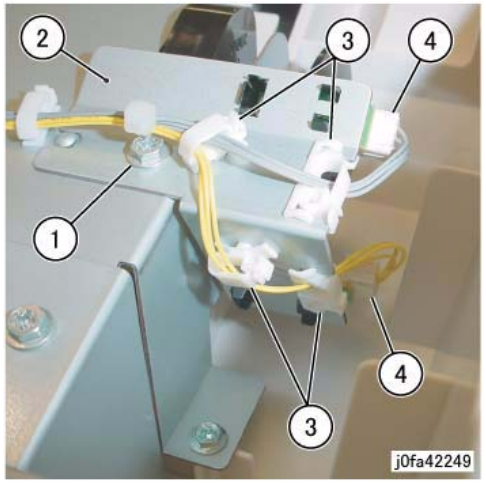

Figure 3 Removing the Stacker Sensor Assembly

12. Remove the Stacker Tray Assembly (Figure 4):
    (1)Remove Screws (5).
    (2)Remove Stacker Tray Assembly.

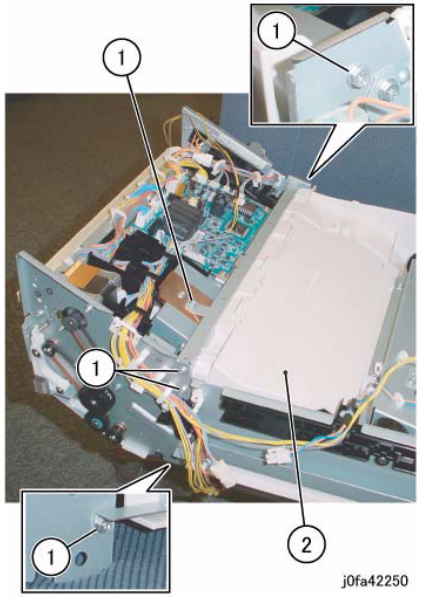

Figure 4 Removing the Stacker Tray Assembly

Replacement

1. Reverse the removal procedure for replacement.
2. Install the Stacker Tray Assembly and Integrated Office Finisher as shown in Figure 5.

Figure 5 Installing the Stacker Tray Assembly

REP 22.17 (Int) Stacker Shaft Assembly

Parts List on PL 22.8

Removal

1. Press the **Job Status** button to check that there are no jobs in progress.
2. Switch off the power and disconnect the power cord.
3. Remove the Integrated Office Finisher from the machine (REP 22.1).
4. Remove the Rear Cover (PL 22.1)
5. Turn over the Integrated Office Finisher.
6. Remove the Tray Cover (PL 22.2)
7. Remove the rear Bracket (Figure 1):
   (1)Remove Screw.
   (2)Remove Bracket.

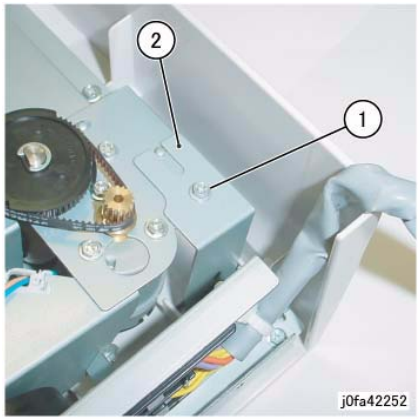

Figure 1 Removing the Rear Bracket

8. Remove the front Bracket (Figure 2):
   (1)Remove Screw.
   (2)Remove Bracket.

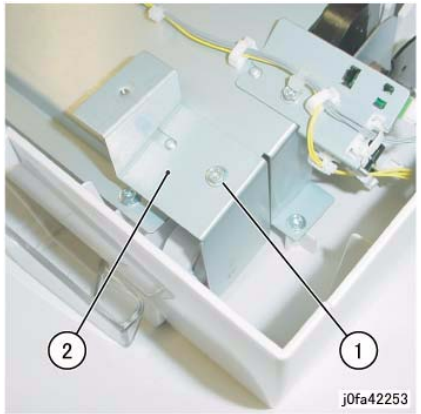

Figure 2 Removing the Front Bracket

9. Remove the Top Tray (Figure 3):
   (1)Raise Integrated Office Finisher slightly in the direction of the arrow.
   (2)Remove Top Tray.

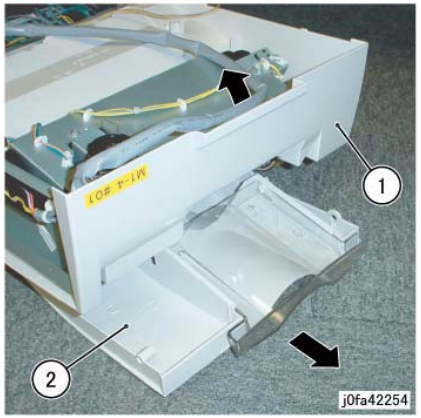

Figure 3 Removing the Top Tray

10. Disconnect Connector (Figure 4):
    (1)Release Clamps (5) and remove the wire.
    (2)Release Wire from Hook.
    (3)Disconnect Connector.

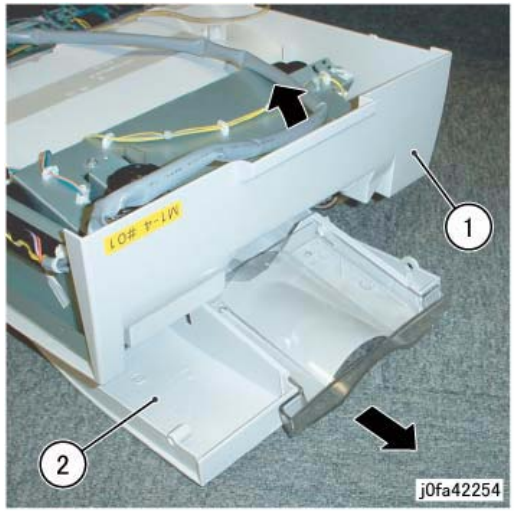

Figure 4 Disconnecting the Connector

11. Remove the Stacker Sensor Assembly (Figure 5):
    (1)Remove Screw.
    (2)Remove Stacker Sensor Assembly.
    (3)Remove Wire from Clamps (5)

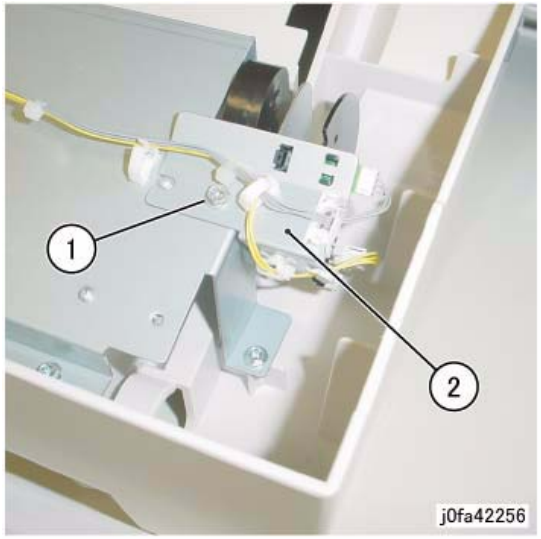

Figure 5 Removing the Stacker Sensor Assembly

12. Remove the Stacker Assembly (Figure 6):
    (1)Remove Self-tapping Screws (5).
    (2)Remove Screw.
    (3)Remove Stacker Assembly.

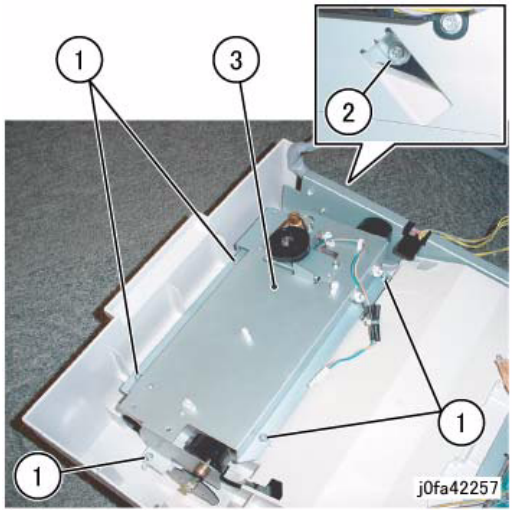

Figure 6 Removing the Stacker Assembly

13. Remove the Actuator (Figure 7):
    (1)Unhook.
    (2)Remove Actuator.

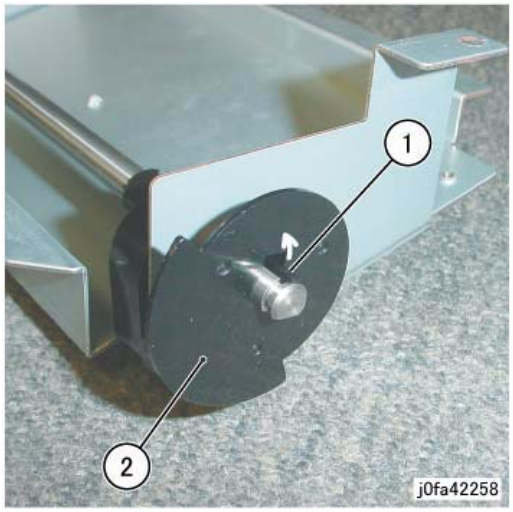

Figure 7 Removing the Actuator

14. Move the Bearing (Figure 8):
    (1)Remove E-Clip.
    (2)Move Bearing in the direction of the arrow.

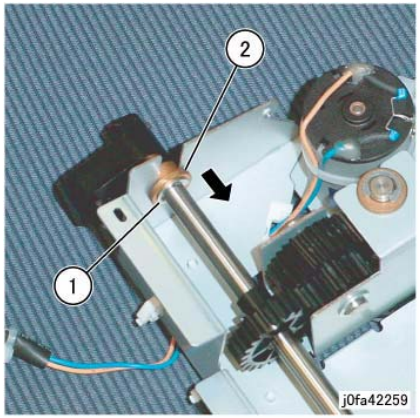

Figure 8 Moving the Bearing

15. Remove the Stacker Shaft Assembly (Figure 9):
    (1)Remove Stacker Shaft Assembly in the direction of the arrow.

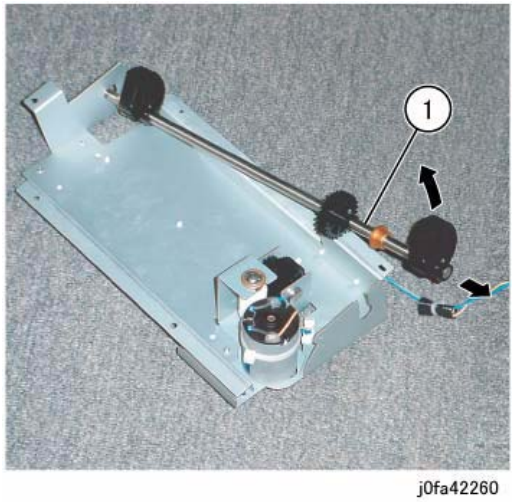

Figure 9 Removing the Stacker Shaft Assembly

Replacement

1. Reverse the removal procedure for replacement.

REP 22.18 (Int) Stacker Motor

Parts List on PL 22.8

Removal

NOTE: *When turning the power OFF, turn the Power Switch OFF first, and then the Main Power Switch.*

1. Press the **Job Status** button to check that there are no jobs in progress.
2. Switch off the power and disconnect the power cord.
3. Remove the Integrated Office Finisher from the machine (REP 22.1).
4. Remove the Rear Cover ({PL 22.1)
5. Turn over the Integrated Office Finisher.
6. Remove the Tray Cover (PL 22.2)
7. Disconnect the Connector (Figure 1):
    (1)Release Clamps (3) and remove the wire.
    (2)Release Wire from Hook.
    (3)Disconnect Connector.

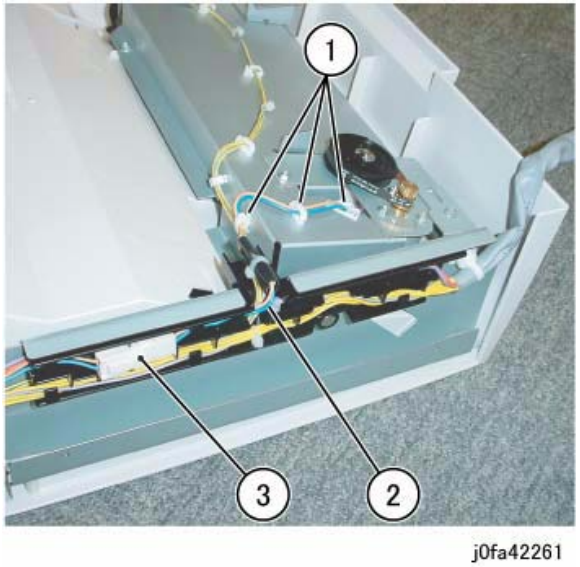

Figure 1 Disconnecting the Connector

8. Remove the Bracket (Figure 2):
    (1)Remove Screw.
    (2)Remove Bracket.

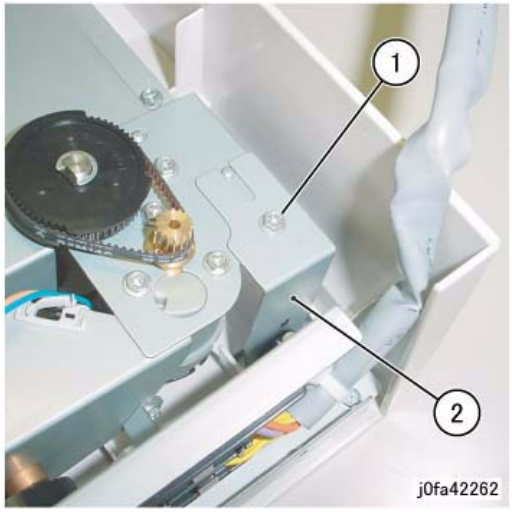

Figure 2 Removing the Bracket

9. Remove the Stacker Motor Assembly (Figure 3):
   (1)Remove Screws (2).
   (2)Remove Stacker Motor Assembly.

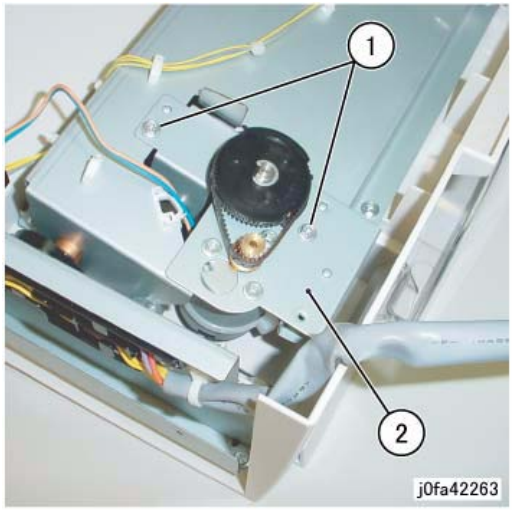

Figure 3 Removing the Stacker Motor Assembly

10. Remove the Stacker Motor (Figure 4):
    (1)Remove Screws (3).
    (2)Remove Belt from Pulley.
    (3)Remove Stacker Motor.

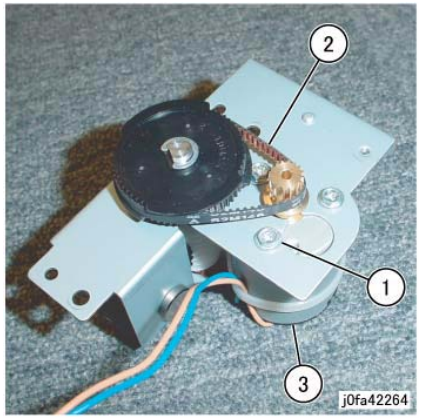

Figure 4 Removing the Stacker Motor)

Replacement

1. Reverse the removal procedure for replacement.
2. Install the Stacker Motor as shown in Figure 5.

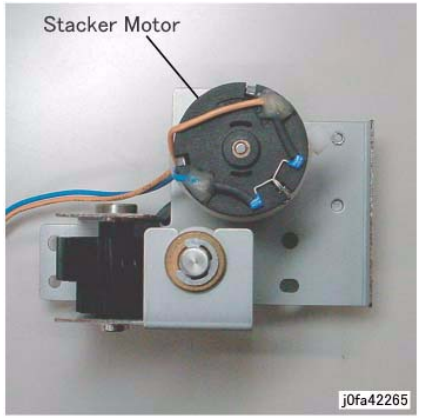

Figure 5 Installing the Stacker Motor

REP 22.19 (Int) Stacker Sensor

Parts List on PL 22.8

Removal

NOTE: *When turning the power OFF, turn the Power Switch OFF first, and then the Main Power Switch.*

1. Press the **Job Status** button to check that there are no jobs in progress.
2. Switch off the power and disconnect the power cord.
3. Remove the Integrated Office Finisher from the machine (REP 22.1).
4. Remove the Rear Cover (PL 22.1)
5. Turn over the Integrated Office Finisher.
6. Remove the Tray Cover (PL 22.2)
7. Remove the Stacker Sensor Assembly (Figure 1):
   (1)Release the wire from the Clamp.
   (2)Remove Screw.
   (3)Remove Stacker Sensor Assembly.
   (4)Disconnect the Sensor Connector and remove Sensor from Bracket (5)

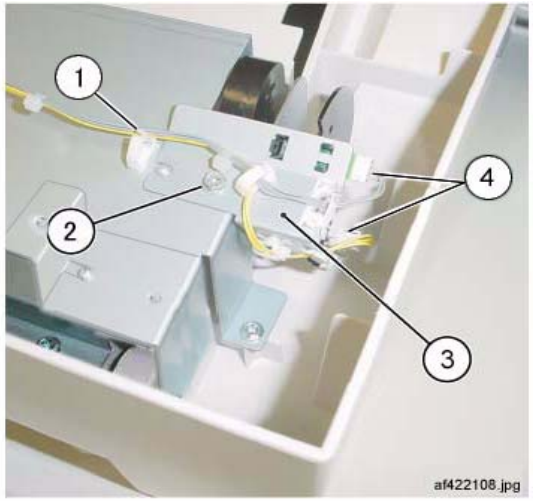

Figure 1 Removing the Stacker Stack Sensor Assembly

Replacement

1. Reverse the removal procedure for replacement.

REP 22.20 (Int) Compiler Assembly

Parts List on PL 22.9

Removal

NOTE: *When turning the power OFF, turn the Power Switch OFF first, and then the Main Power Switch.*

1. Press the **Job Status** button to check that there are no jobs in progress.
2. Switch off the power and disconnect the power cord.
3. Remove the Integrated Office Finisher from the machine (REP 22.1).
4. Remove the Inner Front Cover (PL 22.1)
5. Remove the Rear Cover (PL 22.1)
6. Turn over the Integrated Office Finisher.
7. Remove the Bottom Cover (PL 22.2)
8. Remove the Tray Cover (PL 22.2)
9. Remove the Connector Bracket (Figure 1):
   (1)Release Clamps (3) and remove the wire.
   (2)Disconnect Connectors (5).
   (3)Remove Screws (2).
   (4)Remove Connector Bracket.

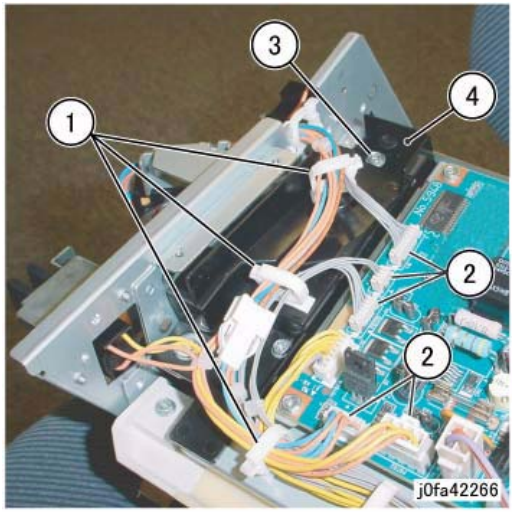

Figure 1 Removing the Connector Bracket

10. Remove the Bottom Plate (Figure 2):
    (1)Release Clamps (5) and remove the wire.
    (2)Disconnect Connectors (8).
    (3)Remove Wire from Hook.
    (4)Remove Screws (4).

(5)Remove Bottom Plate.

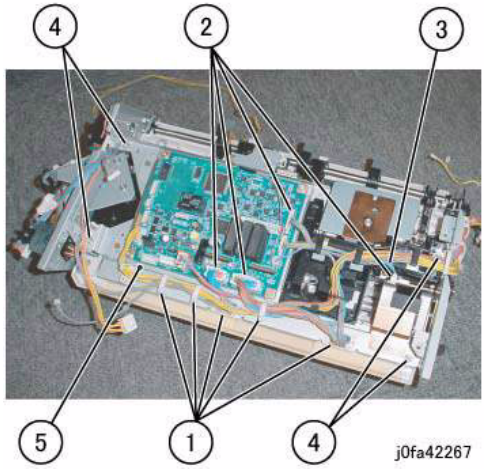

Figure 2 Removing the Bottom Plate

11. Release the Clamp from the wire (Figure 3):
    (1)Release Clamp and remove the wire.

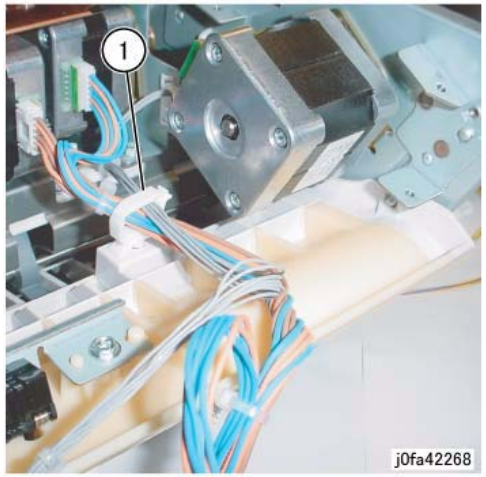

Figure 3 Releasing the Clamp

12. Remove the Stacker Tray (Figure 4):
    (1)Release wires from Clamps (5)
    (2)Disconnect the Connector
    (3)Remove Screws (7)
    (4)Remove the Stacker Tray

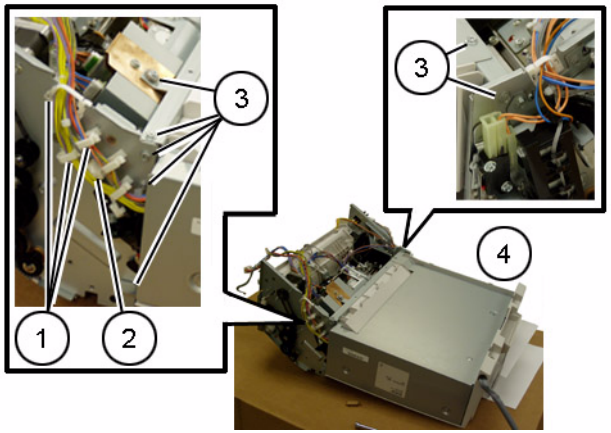

Figure 4 Removing the Stacker Tray

13. Remove the front Self-tapping Screw (Figure 5):
    (1)Remove Self-tapping Screw.

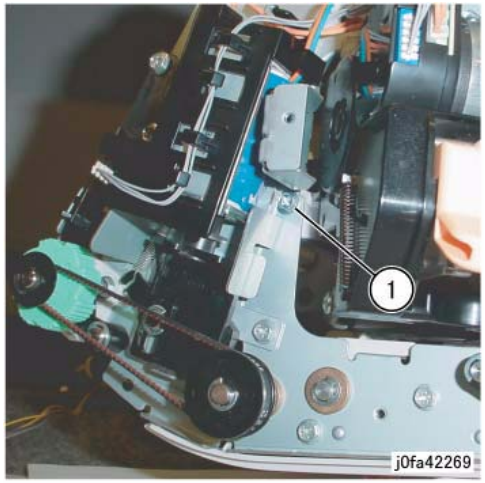

Figure 5 Removing the Self-tapping Screw

14. Remove the rear Screw (Figure 6):
    (1)Remove Screw.

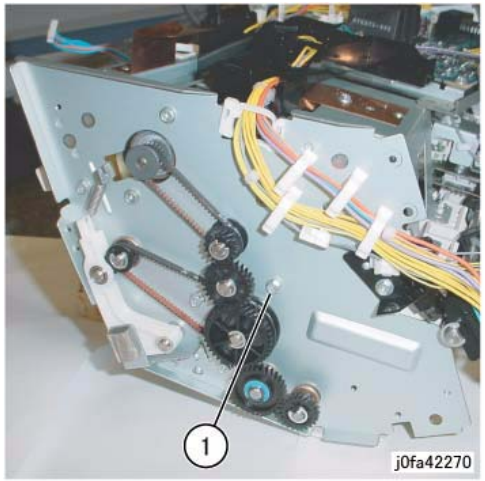

Figure 6 Removing the Screw

15. Remove the Compiler Assembly (Figure 7):
    (1)Remove Compiler Assembly.

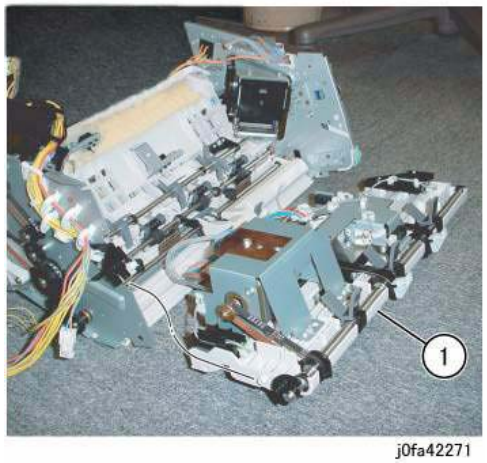

Figure 7 Removing the Compiler Assembly

Replacement

1. Reverse the removal procedure for replacement.

REP 22.21 (Int) Set Clamp Shaft

Parts List on PL 22.9

Removal

1. Press the **Job Status** button to check that there are no jobs in progress.
2. Switch off the power and disconnect the power cord.
3. Remove the Integrated Office Finisher from the machine (PL 22.1).
4. Remove the Compiler Assembly (REP 22.20)
5. Remove the Bracket Assembly (Figure 1):
   (1)Release Clamps (2) and remove the wire.
   (2)Remove Screws (2).
   (3)Remove Bracket Assembly.

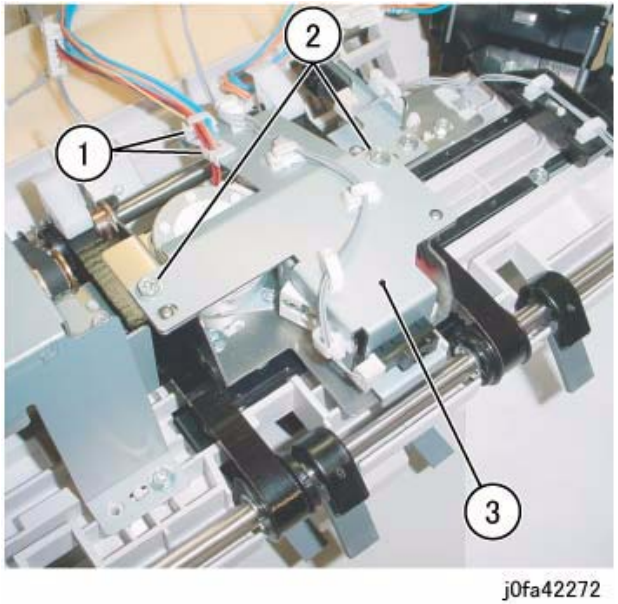

Figure 1 Removing the Bracket Assembly

6. Remove the KL-Clips from the Eject Shaft (Figure 2):
   (1)Remove KL-Clips (2).

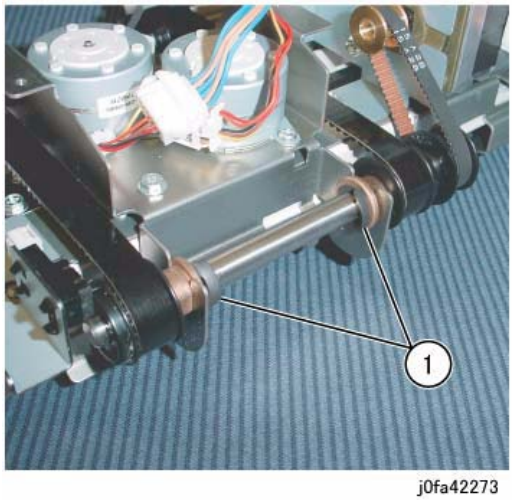

Figure 2 Removing the KL-Clips

7. Remove the Eject Shaft from the Front/Rear Tamper Motor Assembly (Figure 3):
   (1)Move Bearings (2) in the direction of the arrow.
   (2)Remove Eject Shaft in the direction of the arrow.
   (3)Remove Belt from Pulley.

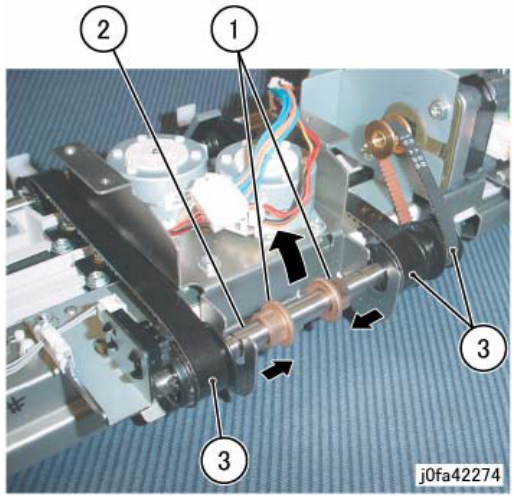

Figure 3 Removing the Eject Shaft

8. Remove the Actuator and the Bearing (Figure 4):
   (1)Remove E-Clip.
   (2)Remove Actuator.
   (3)Remove E-Clip.
   (4)Remove Bearing.

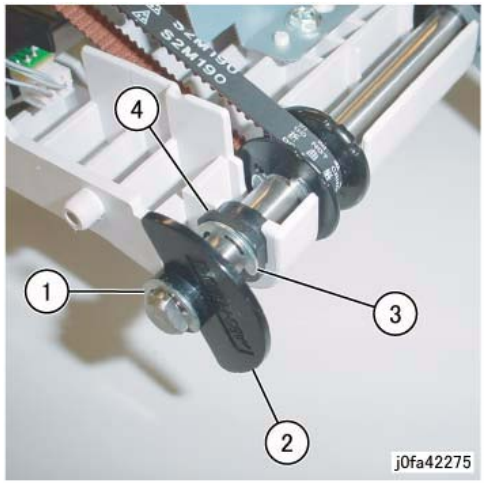

Figure 4 Removing the Actuator and Bearing

9. Remove the Bearing (Figure 5):
   (1)Remove E-Clip.
   (2)Remove Bearing.

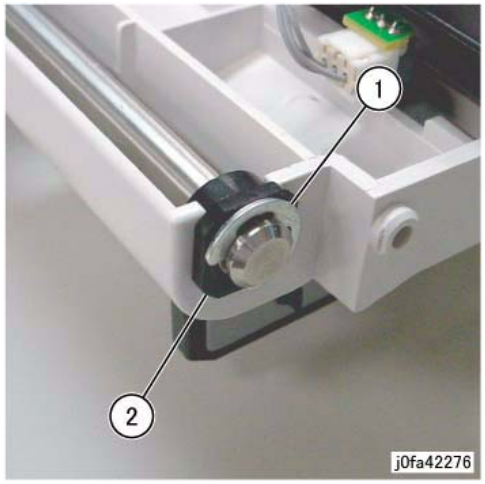

Figure 5 Removing the Bearing

10. Remove the Set Clamp Shaft (Figure 6):
    (1)Move Set Clamp Shaft in the direction of the arrow.

(2)Remove Belts (3) from Pulleys (3).

(3)Remove Set Clamp Shaft in the direction of the arrow.

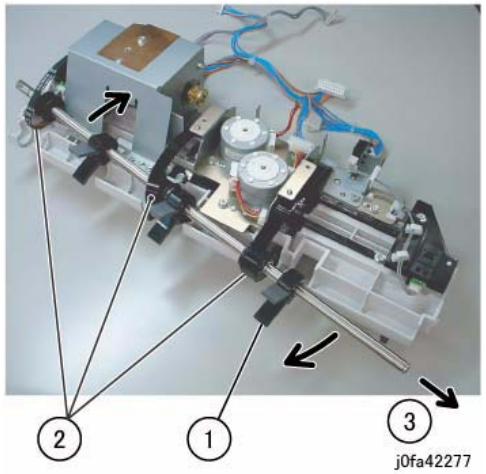

Figure 6 Removing the Set Clamp Shaft

Replacement

1. Reverse the removal procedure for replacement.
2. Install and align the Eject Belt with marks on the Pulleys (Figure 7):

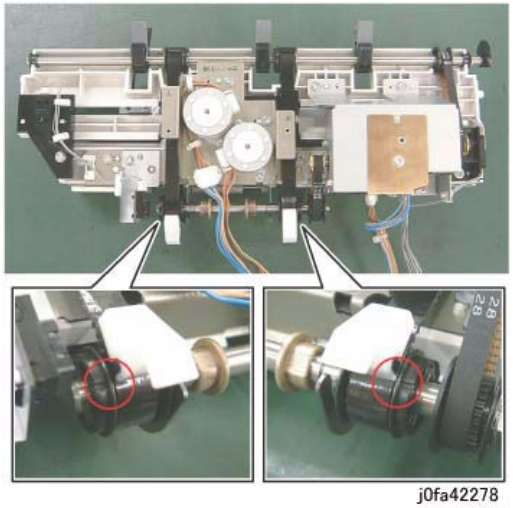

Figure 7 Installing the Eject Belt

REP 22.22 (Int) Eject Belt

Parts List on PL 22.9

Removal

NOTE: *When turning the power OFF, turn the Power Switch OFF first, and then the Main Power Switch.*

1. Press the **Job Status** button to check that there are no jobs in progress.
2. Switch off the power and disconnect the power cord.
3. Remove the Integrated Office Finisher from the machine (PL 22.1).
4. Remove the Compiler Assembly (REP 22.20)
5. Remove the Front/Rear Tamper Motor Assembly (REP 22.26)
6. Move the Eject Home Sensor Assembly (Figure 1):

   (1)Remove Screw.

   (2)Move Eject Home Sensor Assembly.

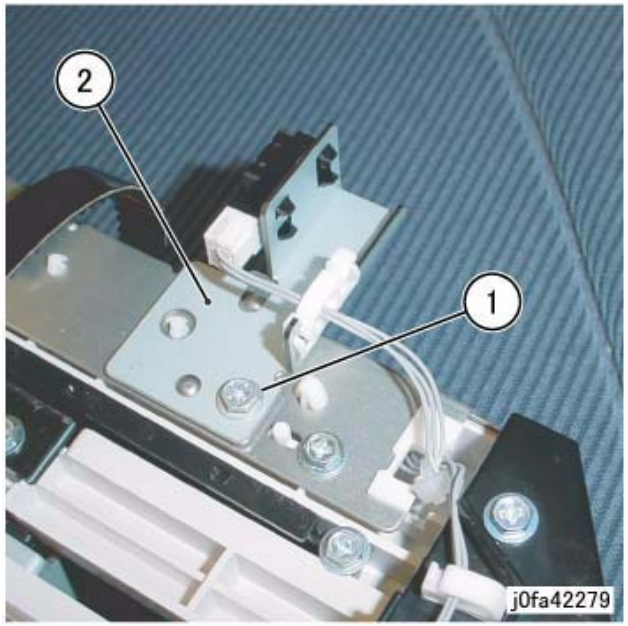

Figure 1 Moving the Eject Home Sensor Assembly (j0fa42279)

7. Remove the Eject Belt (Figure 2):

   (1)Move the blades of Set Clamp Shaft in the direction of the arrow.

   (2)Remove Eject Belt in the direction of the arrow.

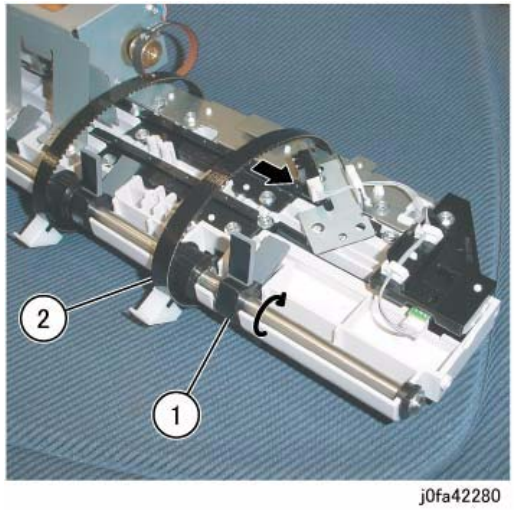

Figure 2 Removing the Eject Belt

Replacement

1. Reverse the removal procedure for replacement.
2. Install and align the Eject Belt with marks on the Pulleys (Figure 3):

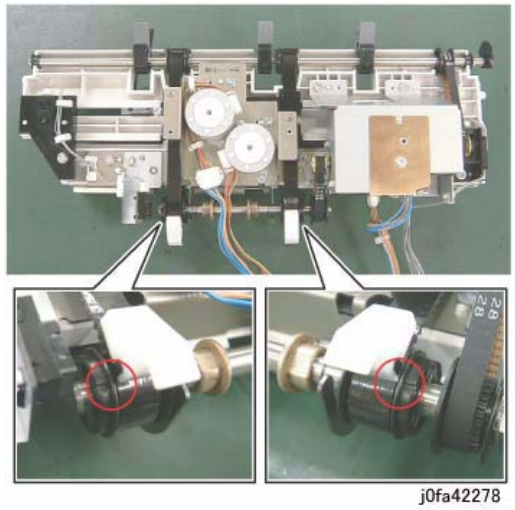

Figure 3 Installing the Eject Belt

REP 22.23 (Int) Eject/Set Clamp Motor Assembly

Parts List on PL 22.9

Removal

NOTE: *When turning the power OFF, turn the Power Switch OFF first, and then the Main Power Switch.*

1. Press the **Job Status** button to check that there are no jobs in progress.
2. Switch off the power and disconnect the power cord.
3. Remove the Integrated Office Finisher from the machine (REP 22.1).
4. Remove the Inner Front Cover (PL 22.1)
5. Remove the Rear Cover (PL 22.1)
6. Turn over the Integrated Office Finisher.
7. Remove the Bottom Cover (PL 22.2)
8. Remove the Connector Bracket (Figure 1):
   (1)Release Clamps (3) and remove the wire.
   (2)Disconnect Connectors (5).
   (3)Remove Screws (2).
   (4)Remove Connector Bracket.

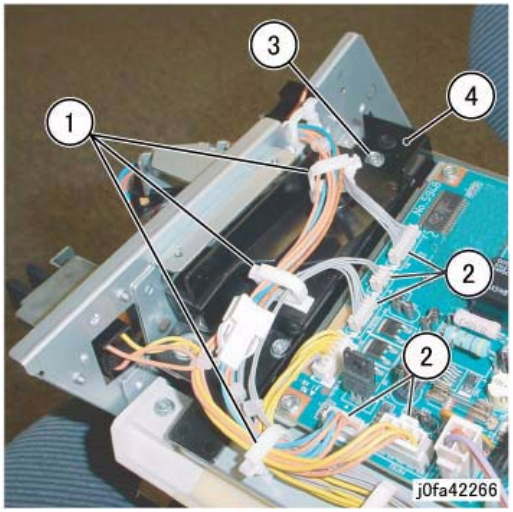

Figure 1 Removing the Connector Bracket

9. Remove the Bottom Plate (Figure 2):
   (1)Release Clamps (5) and remove the wire.
   (2)Disconnect Connectors (8).
   (3)Remove Wire from Hook.
   (4)Remove Screws (4).
   (5)Remove Bottom Plate.

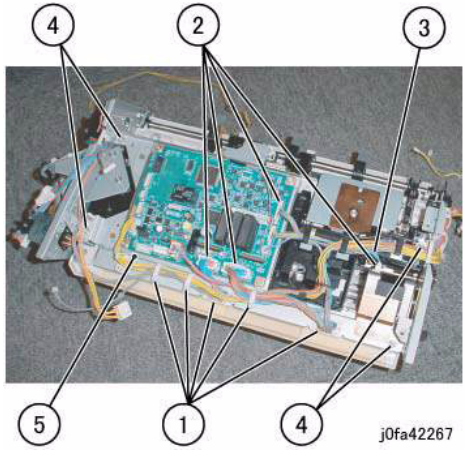

Figure 2 Removing the Bottom Plate

10. Remove the Stacker Tray (Figure 3):
    (1)Release wires from Clamps (5)
    (2)Disconnect the Connector
    (3)Remove Screws (7)
    (4)Remove the Stacker Tray

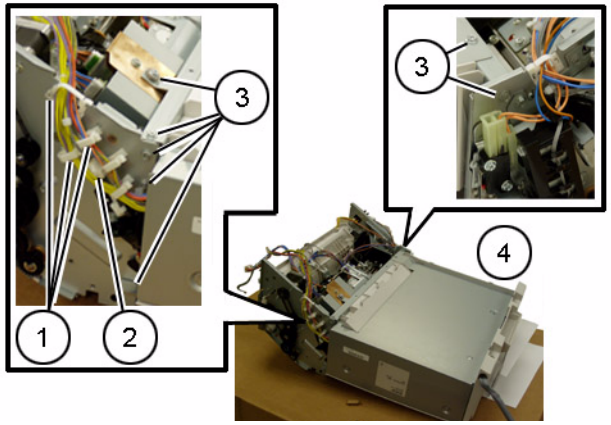

Figure 3 Removing the Stacker Tray

11. Remove the screws securing the Eject/Set Clamp Motor Assembly (Figure 4):
    (1)Release Clamps (2) and remove the wire.
    (2)Remove Screws (2).
    (3)Remove Self-tapping Screws (2).

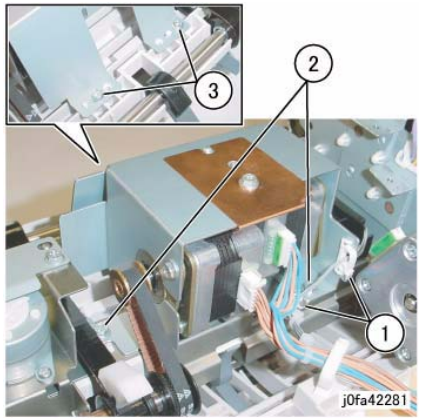

Figure 4 Removing Screws

12. Remove the Eject/Set Clamp Motor Assembly (Figure 5):
    (1)Remove Belts (2) from Pulley.
    (2)Remove Eject/Set Clamp Motor Assembly.

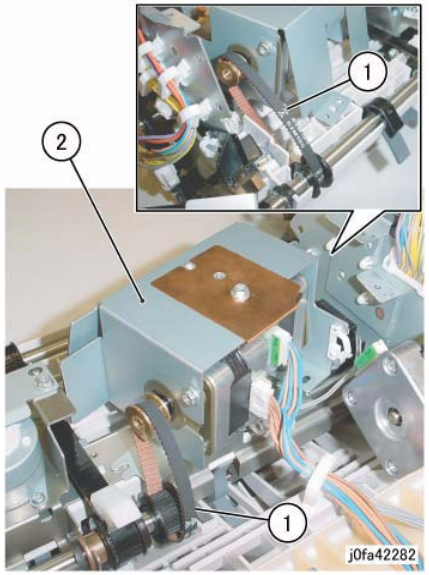

Figure 5 Removing the Eject/Set Clamp Motor Assembly

Replacement

1. Reverse the removal procedure for replacement.

REP 22.24 (Int) Rear Tamper Home Sensor

Parts List on PL 22.9

Removal

NOTE: *When turning the power OFF, turn the Power Switch OFF first, and then the Main Power Switch.*

1. Press the **Job Status** button to check that there are no jobs in progress.
2. Switch off the power and disconnect the power cord.
3. Remove the Integrated Office Finisher from the machine (REP 22.1).
4. Remove the Inner Front Cover (PL 22.1)
5. Remove the Rear Cover (PL 22.1)
6. Turn over the Integrated Office Finisher.
7. Remove the Bottom Cover (PL 22.2)
8. Remove the Connector Bracket (Figure 1):
   (1)Release Clamps (3) and remove the wire.
   (2)Disconnect Connectors (5).
   (3)Remove Screws (2).
   (4)Remove Connector Bracket.

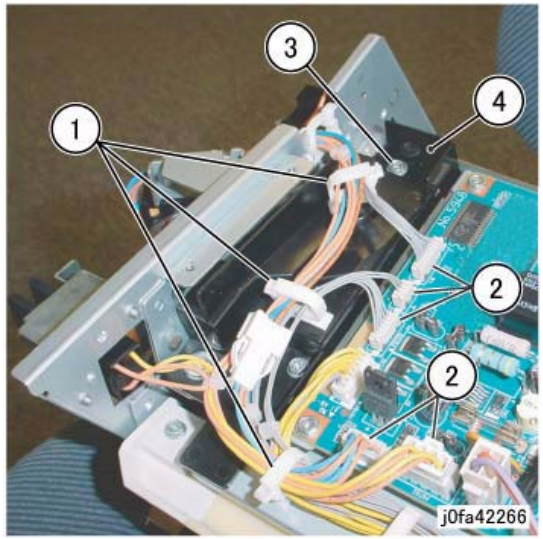

Figure 1 Removing the Connector Bracket

9. Remove the Bottom Plate (Figure 2):
   (1)Release Clamps (5) and remove the wire.
   (2)Disconnect Connectors (8).
   (3)Remove Wire form Hook.
   (4)Remove Screw (4).
   (5)Remove Bottom Plate.

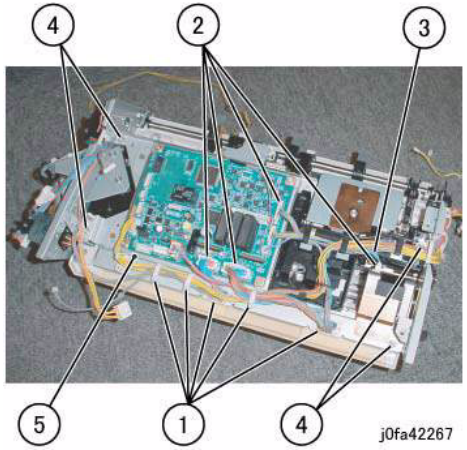

Figure 2 Moving the Bottom Plate

10. Remove the Rear Tamper Home Sensor Assembly (Figure 3):
    (1)Release Clamps (2) and remove the wire.
    (2)Remove Self-tapping Screw.
    (3)Move Rear Tamper Home Sensor Assembly in order to disconnect the connector.

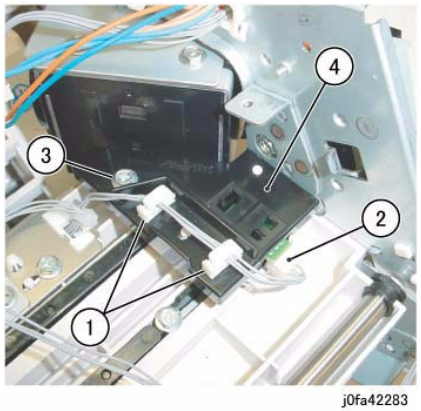

Figure 3 Removing the Rear Tamper Home Sensor Assembly

11. Remove the Rear Tamper Home Sensor (Figure 4):
    (1)Remove Rear Tamper Home Sensor from the bracket.

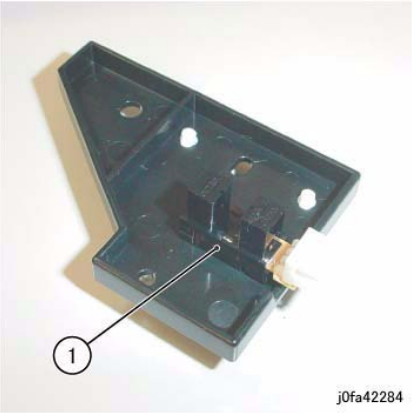

Figure 4 Removing the Rear Tamper Home Sensor

Replacement

1. Reverse the removal procedure for replacement.

REP 22.25 (Int) Eject Shaft Assembly

Parts List on PL 22.9

Removal

NOTE: *When turning the power OFF, turn the Power Switch OFF first, and then the Main Power Switch.*

1. Press the **Job Status** button to check that there are no jobs in progress.
2. Switch off the power and disconnect the power cord.
3. Remove the Integrated Office Finisher from the machine (PL 22.1).
4. Remove the Compiler Assembly (REP 22.20)
5. Remove the Bracket Assembly (Figure 1):
   (1)Release Clamps (2) and remove the wire.
   (2)Remove Screws (2).
   (3)Remove Bracket Assembly.

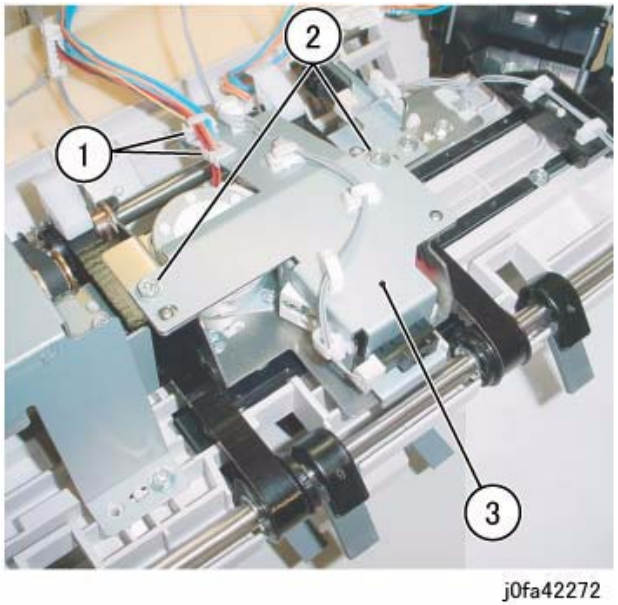

Figure 1 Removing the Bracket Assembly

6. Remove the KL-Clips from the Eject Shaft (Figure 2):
   (1)Remove KL-Clips (2).

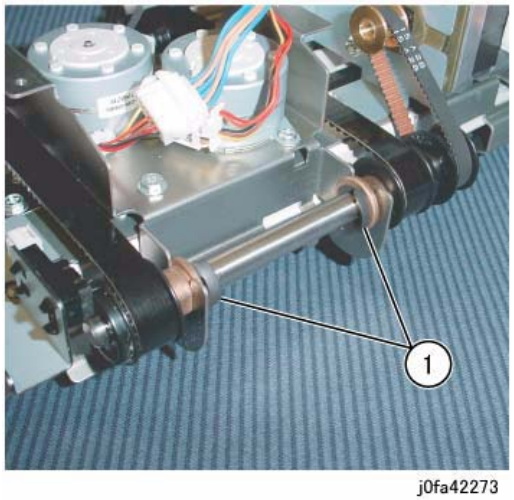

Figure 2 Removing the KL-Clips

7. Remove the Eject Shaft from the Front/Rear Tamper Motor Assembly (Figure 3):
   (1)Move Bearings (2) in the direction of the arrow.
   (2)Remove Eject Shaft in the direction of the arrow.
   (3)Remove Belt from Pulley.

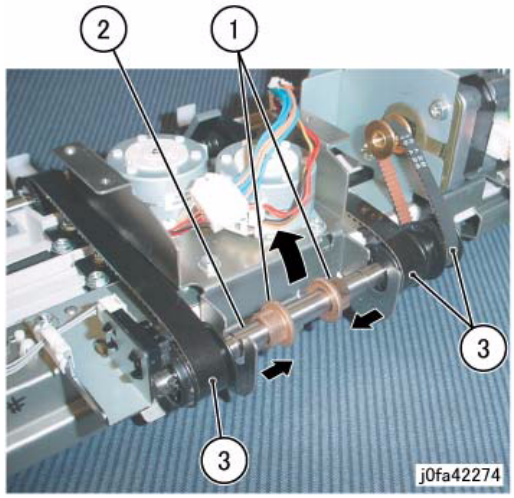

Figure 3 Removing the Eject Shaft

Replacement

1. Reverse the removal procedure for replacement.
2. Install and align the Eject Belt with marks on the Pulleys (Figure 4):

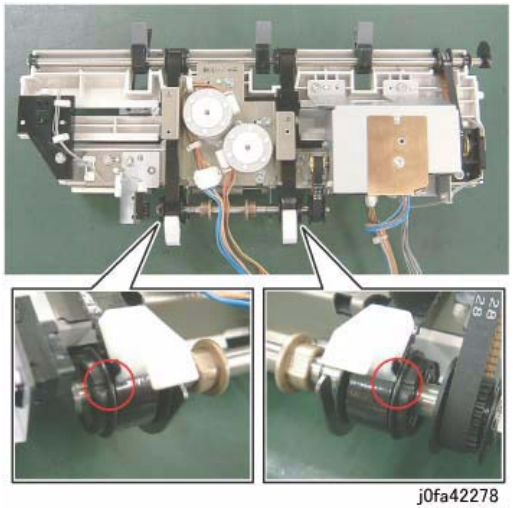

Figure 4 Installing the Eject Belt

REP 22.26 (Int) Front /Rear Tamper Motor Assembly

Parts List on PL 22.10

Removal

NOTE: *When turning the power OFF, turn the Power Switch OFF first, and then the Main Power Switch.*

1. Press the **Job Status** button to check that there are no jobs in progress.
2. Switch off the power and disconnect the power cord.
3. Remove the Integrated Office Finisher from the machine (PL 22.1).
4. Remove the Compiler Assembly (REP 22.20)
5. Remove the Bracket Assembly (Figure 1):
   (1)Release Clamps (2) and remove the wire.
   (2)Remove Screws (2).
   (3)Remove Bracket Assembly.

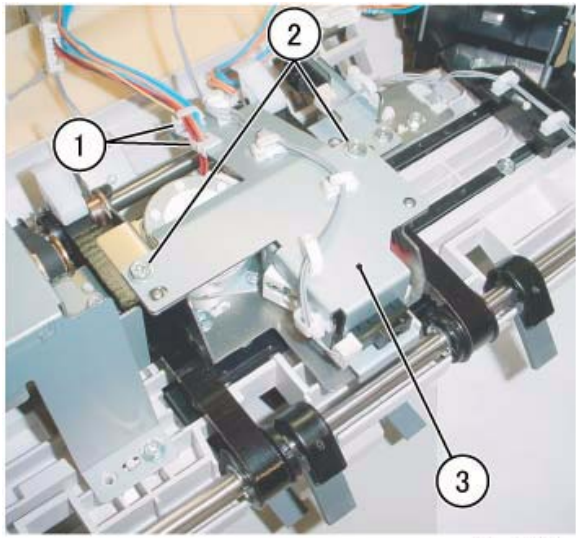

j0fa42272

Figure 1 Removing the Bracket Assembly

6. Remove the KL-Clips from the Eject Shaft (Figure 2):
   (1)Remove KL-Clips (2).

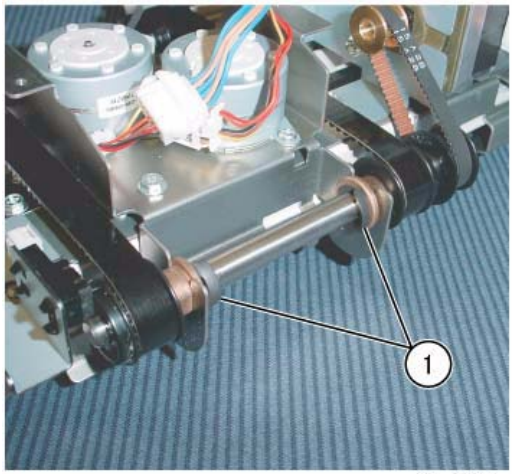

j0fa42273

Figure 2 Removing the KL-Clips

7. Remove the Eject Shaft from the Front/Rear Tamper Motor Assembly (Figure 3):
   (1)Move Bearings (2) in the direction of the arrow.
   (2)Remove Eject Shaft in the direction of the arrow.
   (3)Remove Belt from Pulley.

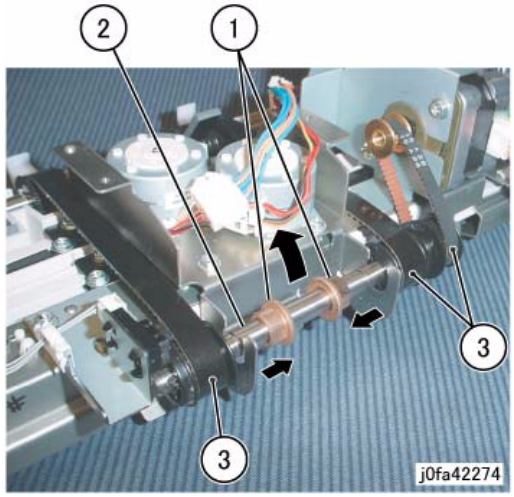

j0fa42274

Figure 3 Removing the Eject Shaft

8. Remove the Front/Rear Tamper Motor Assembly (Figure 4):
   (1)Remove Self-tapping Screws (2).

(2)Remove Screw.

(3)Remove Front/Rear Tamper Motor Assembly.

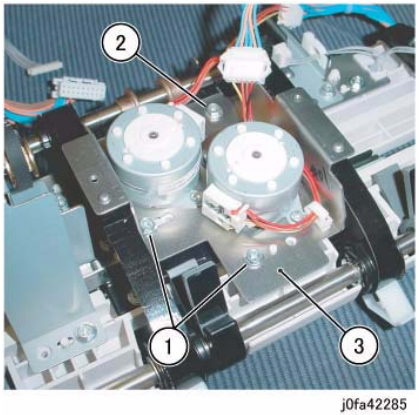

Figure 4 Removing the Front/Rear Tamper Motor Assembly

Replacement

1. Reverse the removal procedure for replacement.
2. Install and align the Eject Belt with marks on the Pulleys (Figure 5):

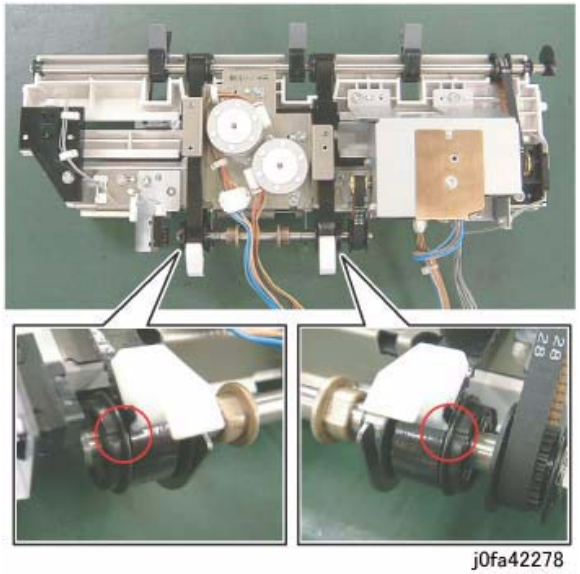

Figure 5 Installing the Eject Belt

REP 22.27 (Int) Front Tamper Home Sensor

Parts List on PL 22.10

Removal

NOTE: *When turning the power OFF, turn the Power Switch OFF first, and then the Main Power Switch.*

1. Press the **Job Status** button to check that there are no jobs in progress.
2. Switch off the power and disconnect the power cord.
3. Remove the Integrated Office Finisher from the machine (REP 22.1).
4. Remove the Inner Front Cover (PL 22.1)
5. Remove the Rear Cover (PL 22.1)
6. Turn over the Integrated Office Finisher.
7. Remove the Bottom Cover (PL 22.2)
8. Remove the Connector Bracket (Figure 1):
   (1)Release Clamps (3) and remove the wire.
   (2)Disconnect Connectors (5).
   (3)Remove Screws (2).
   (4)Remove Connector Bracket.

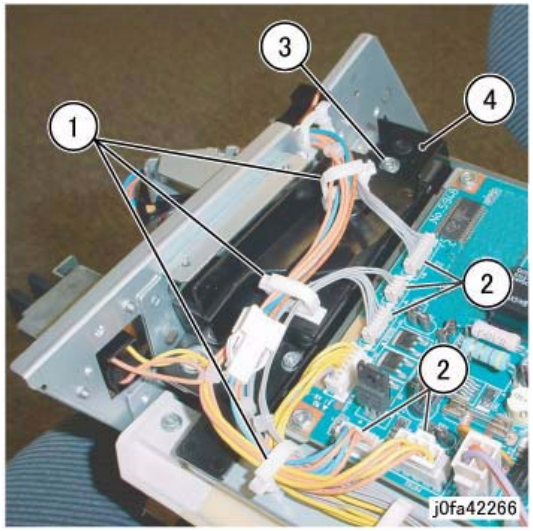

Figure 1 Removing the Connector Bracket

9. Remove the Bottom Plate (Figure 2):
   (1)Release Clamps (5) and remove the wire.
   (2)Disconnect Connectors (8).
   (3)Remove Wire from Hook.
   (4)Remove Screws (4).
   (5)Remove Bottom Plate.

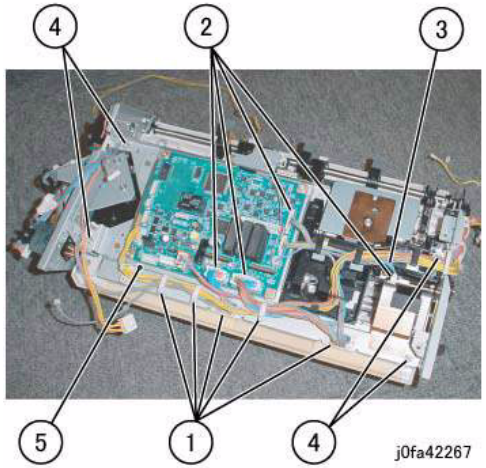

Figure 2 Removing the Bottom Plate

10. Remove the Front Tamper Home Sensor Assembly (Figure 3):
    (1)Remove Screw.
    (2)Remove Front Tamper Home Sensor Assembly.

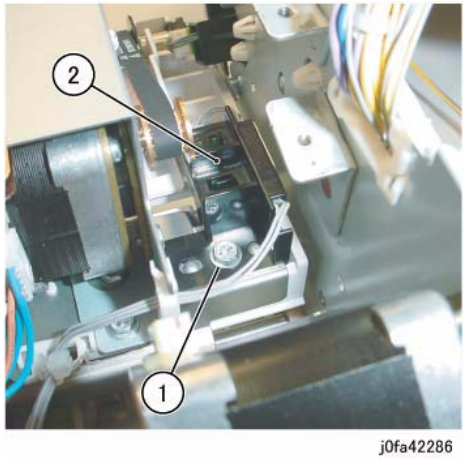

Figure 3 Removing the Front Tamper Home Sensor Assembly

11. Remove the Front Tamper Home Sensor Assembly (Figure 4):
    (1)Disconnect Connector.
    (2)Remove Front Tamper Home Sensor Assembly.

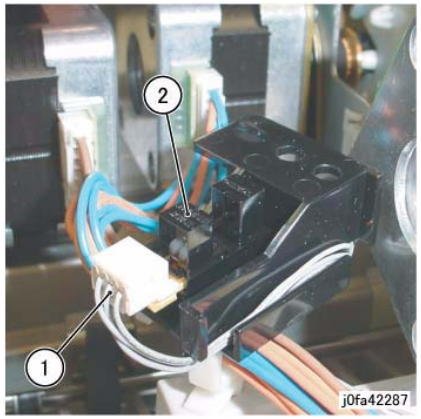

Figure 4 Removing the Front Tamper Home Sensor

Replacement

1. Reverse the removal procedure for replacement.

REP 22.28 (Int) Eject Clamp Home Sensor

Parts List on PL 22.10

Removal

NOTE: *When turning the power OFF, turn the Power Switch OFF first, and then the Main Power Switch.*

1. Press the **Job Status** button to check that there are no jobs in progress.
2. Switch off the power and disconnect the power cord.
3. Remove the Integrated Office Finisher from the machine (REP 22.1).
4. Turn over the Integrated Office Finisher.
5. Remove the Bottom Cover (PL 22.2)
6. Remove the Connector Bracket (Figure 1):
   (1)Release Clamps (3) and remove the wire.
   (2)Disconnect Connectors (5).
   (3)Remove Screws (2).
   (4)Remove Connector Bracket.

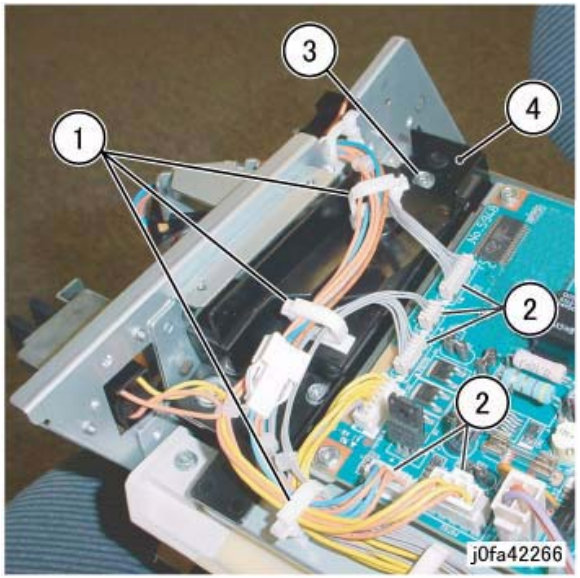

Figure 1 Removing the Connector Bracket

7. Remove the Bottom Plate (Figure 2):
   (1)Release Clamps (5) and remove the wire.
   (2)Disconnect Connectors (8).
   (3)Remove Wire from Hook.
   (4)Remove Screws (4).
   (5)Remove Bottom Plate.

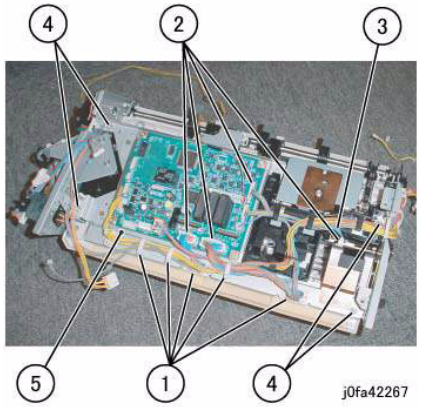

Figure 2 Removing the Bottom Plate

8. Remove the Eject Home Sensor (Figure 3):
   (1)Release Clamp and remove the wire.
   (2)Disconnect Connector.
   (3)Remove Eject Home Sensor from the bracket.

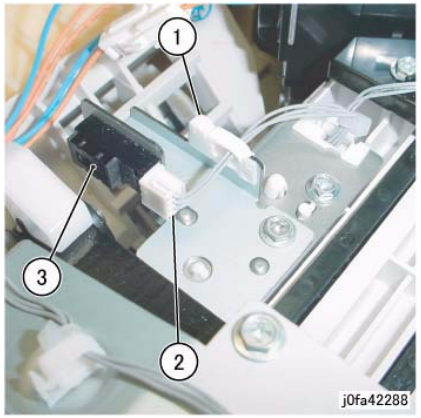

Figure 3 Removing the Eject Home Sensor

Replacement

1. Reverse the removal procedure for replacement.

REP 22.29 (Int) Stack Height Sensor

Parts List on PL 22.10

Removal

NOTE: *When turning the power OFF, turn the Power Switch OFF first, and then the Main Power Switch.*

1. Press the **Job Status** button to check that there are no jobs in progress.
2. Switch off the power and disconnect the power cord.
3. Remove the Integrated Office Finisher from the machine (REP 22.1).
4. Remove the Inner Front Cover (PL 22.1)
5. Remove the Rear Cover (PL 22.1)
6. Turn over the Integrated Office Finisher.
7. Remove the Bottom Cover (PL 22.2)
8. Remove the Connector Bracket (Figure 1):
   (1)Release Clamps (3) and remove the wire.
   (2)Disconnect Connectors (5).
   (3)Remove Screws (2).
   (4)Remove Connector Bracket.

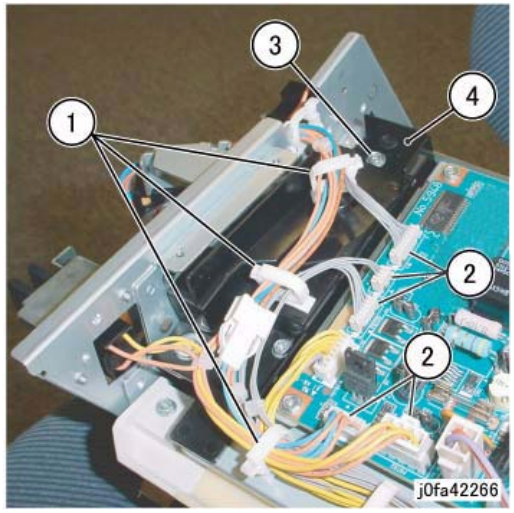

Figure 1 Removing the Connector Bracket

9. Remove the Bottom Plate (Figure 2):
   (1)Release Clamps (5) and remove the wire.
   (2)Disconnect Connectors (8).
   (3)Remove Wire from Hook.
   (4)Remove Screws (4).
   (5)Remove Bottom Plate.

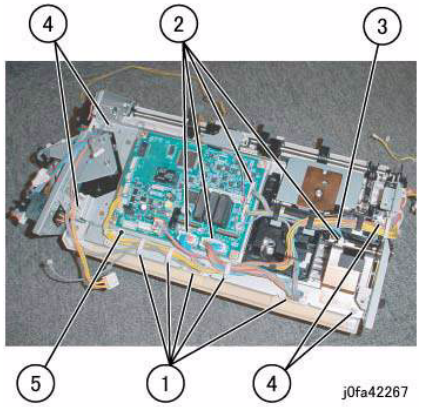

Figure 2 Removing the Bottom Plate

10. Remove the Stacker Tray (Figure 3):
    (1)Release wires from Clamps (5)
    (2)Disconnect the Connector
    (3)Remove Screws (7)
    (4)Remove the Stacker Tray

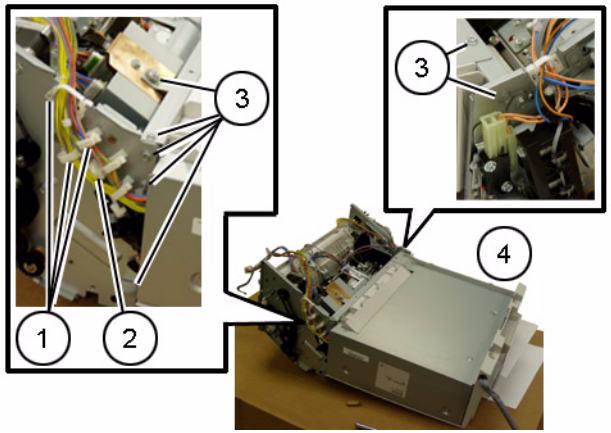

Figure 3 Removing the Stacker Tray

11. Remove the Bracket Assembly (Figure 4):
    (1)Release Clamps (2) and remove the wire.
    (2)Remove Screws (2).
    (3)Remove Bracket Assembly.

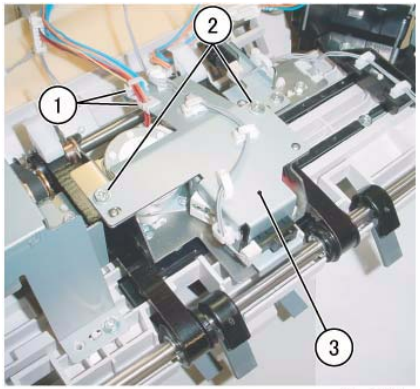

j0fa42272

Figure 4 Removing the Bracket Assembly

12. Remove the Stack Height Sensor (Figure 5):
    (1)Remove Clamp.
    (2)Release Clamps (4) and remove the wire.
    (3)Disconnect Connector.
    (4)Remove Stack Height Sensor from the bracket.

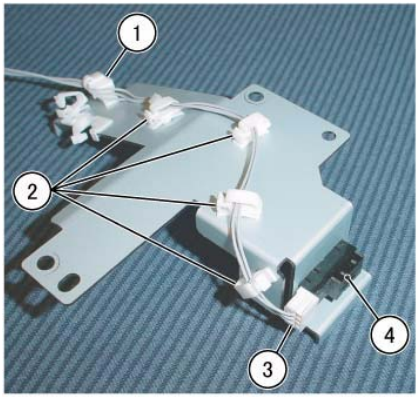

j0fa42289

Figure 5 Removing the Stack Height Sensor

Replacement

1. Reverse the removal procedure for replacement.

REP 23.1 (LX) H-Transport Assembly

Parts List on PL 23.1

Removal

NOTE: *When turning the power OFF, turn the Power Switch OFF first, and then the Main Power Switch.*

1. Press the **Job Status** button to check that there are no jobs in progress.
2. Switch off the power and disconnect the power cord.
3. Undock the Finisher Assembly (REP 23.5).
4. Move the H-Transport Assembly (Figure 1).

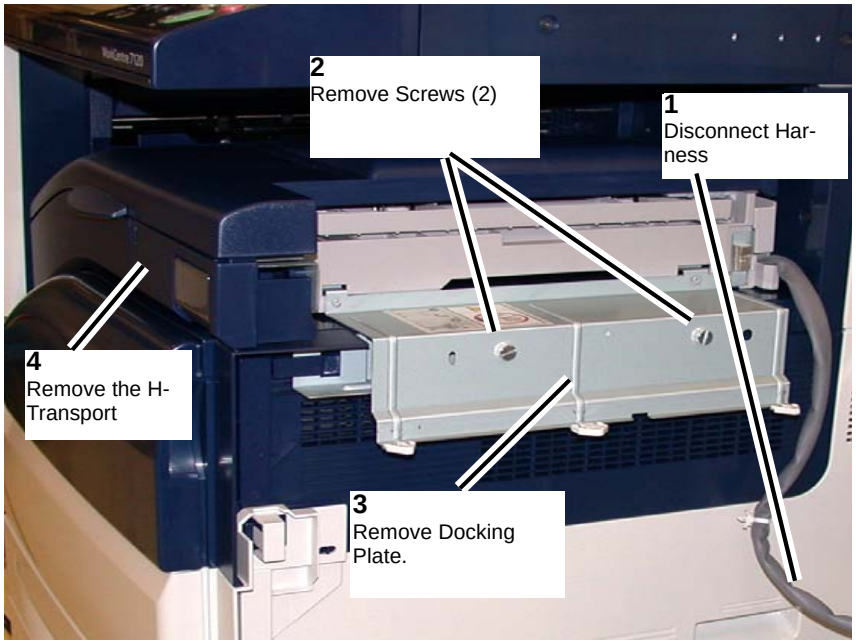

Figure 1 Removing the Docking Bracket

Replacement

1. To install, carry out the removal steps in reverse order.

REP 23.2 (LX) Hole Punch Assembly

Parts List on PL 23.2

Removal

NOTE: *When turning the power OFF, turn the Power Switch OFF first, and then the Main Power Switch.*

1. Press the **Job Status** button to check that there are no jobs in progress.
2. Switch off the power and disconnect the power cord.
3. Open the H-Transport Top Cover and hold it open.
4. Open the H-Transport Front Cover.
5. Remove the Hole Punch Assembly (Figure 1).

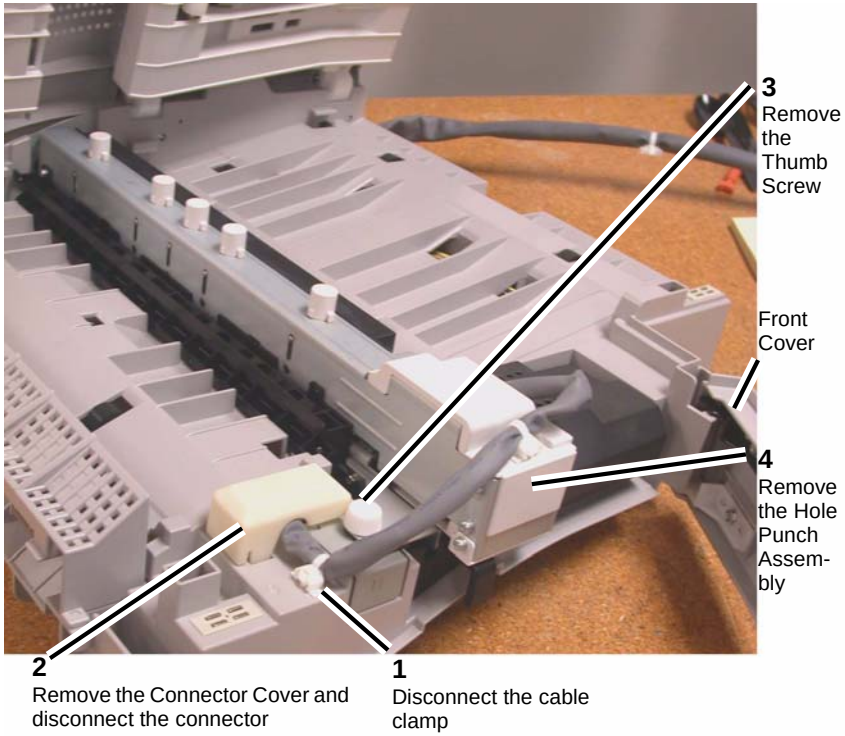

Figure 1 Removing the Hole Punch Assembly

Replacement

1. Insert the Hole Punch Assembly rear locating pin into the H-Transport frame.
2. Install the Hole Punch Assembly in reverse order of removal.

REP 23.3 (LX) H-Transport Belt

Parts List on PL 23.4

Removal

NOTE: *When turning the power OFF, turn the Power Switch OFF first, and then the Main Power Switch.*

1. Press the **Job Status** button to check that there are no jobs in progress.
2. Switch off the power and disconnect the power cord.
3. Remove the H-Transport Assembly (REP 23.1).
4. Remove the screws (2) on the H-Transport Rear Cover and remove the Cover.
5. Loosen the screws (2) on the Tension Bracket (Figure 1).
6. Remove the Belt.

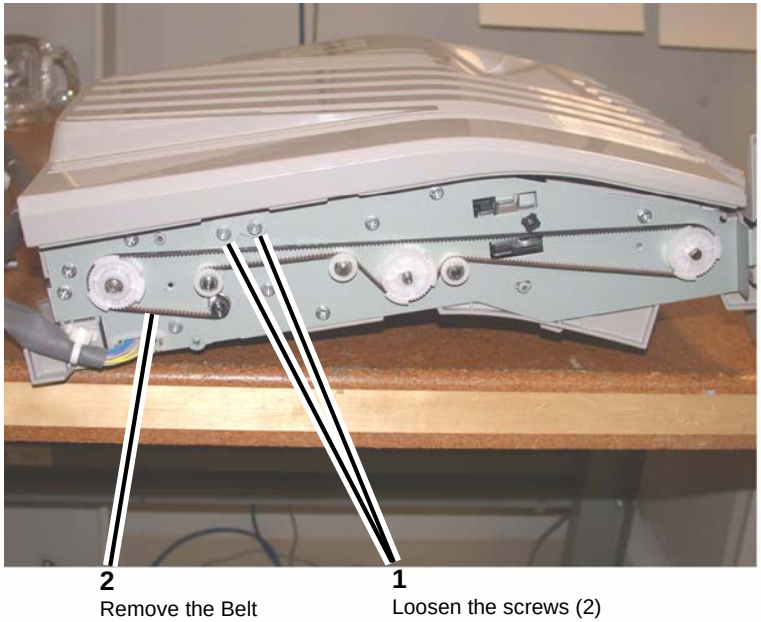

Figure 1 Removing the H-Transport Belt

Replacement

Install the H-Transport Belt in reverse order of removal.

REP 23.4 (LX) H-Transport Motor

Parts List on PL 23.4

Removal

NOTE: *When turning the power OFF, turn the Power Switch OFF first, and then the Main Power Switch.*

1. Press the **Job Status** button to check that there are no jobs in progress.
2. Switch off the power and disconnect the power cord.
3. Remove the H-Transport Assembly (REP 23.1).
4. Remove the H-Transport Rear Cover.
5. Place the H-Transport top down on a work surface.
6. Remove the H-Transport motor (Figure 1).

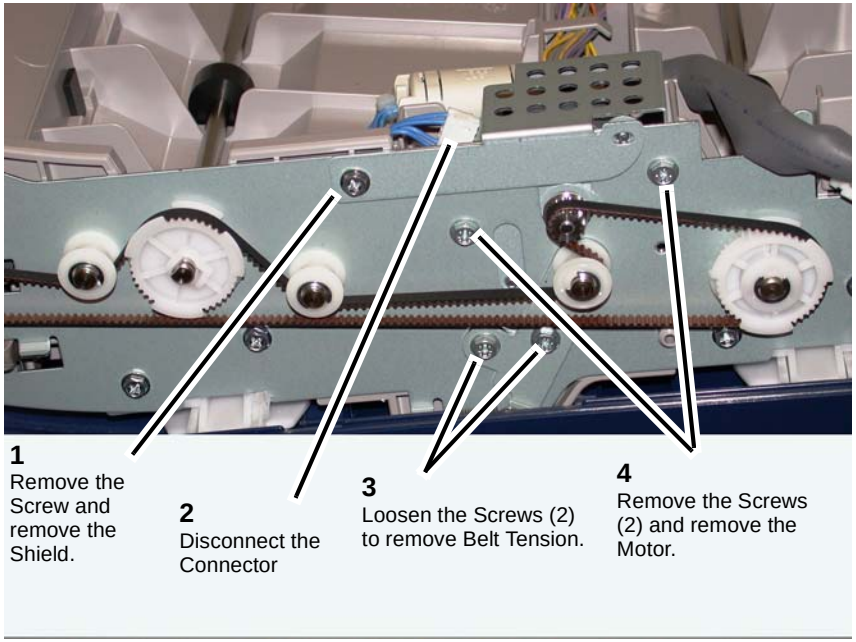

Figure 1 Removing the H-Transport Drive Motor

Replacement

Replace in reverse order of removal.

REP 23.5 (LX) Finisher Undocking

Parts List on PL 23.1

Removal

NOTE: *When turning the power OFF, turn the Power Switch OFF first, and then the Main Power Switch.*

1. Press the **Job Status** button to check that there are no jobs in progress.
2. Switch off the power and disconnect the Printer power cord.
3. Disconnect the Finisher Power Cord, the H-Transport Connector and the Finisher Connector from the IOT.

CAUTION

The Finisher is unstable when not docked with the Printer. Use care when handling an undocked Finisher so that it does not fall over.

4. Rotate the Feet (2) to free the Finisher. (Figure 1)

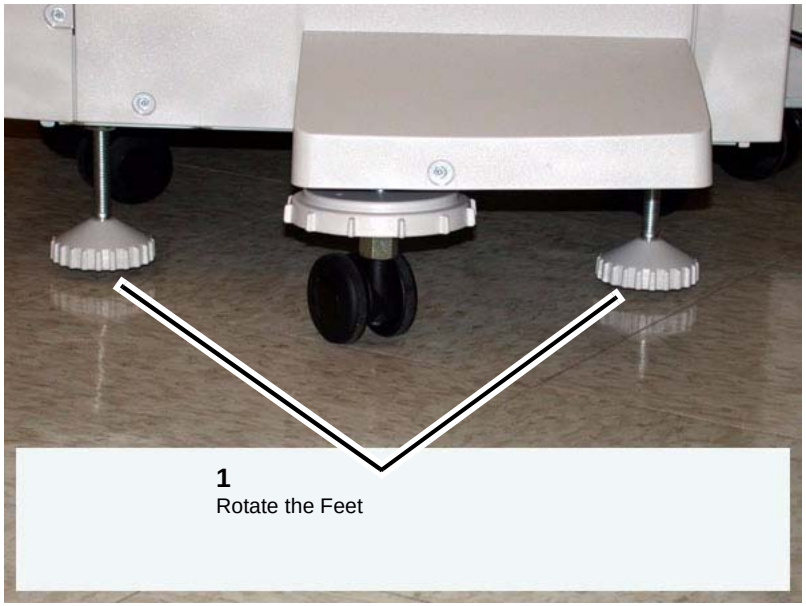

Figure 1 Finisher Feet

5. Open the Front Door of the Finisher.
6. Release the Screw that secures the Docking Plate and detach the Finisher.
   (1) Remove the Screw.
   (2) Pull the Docking Plate Lever towards you and detach the Finisher.(Figure 2)

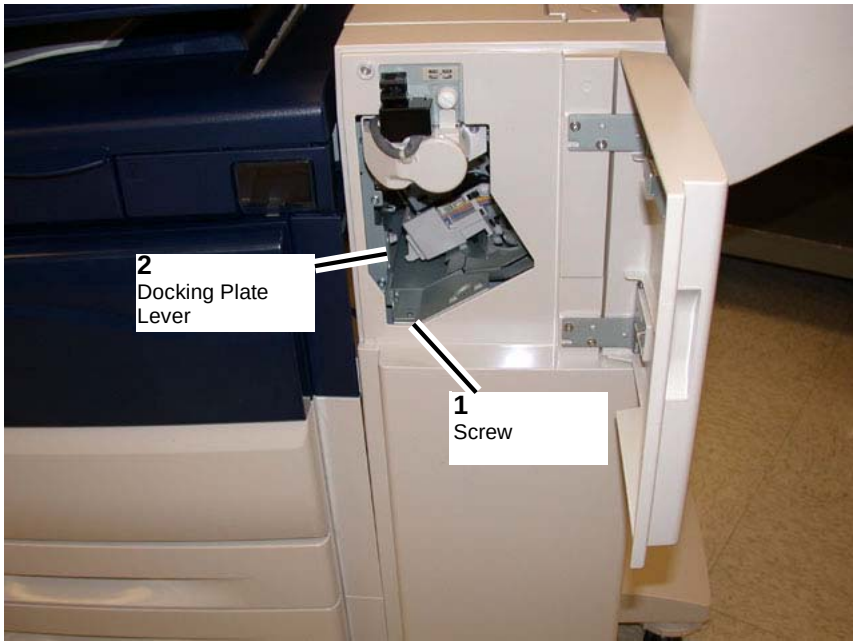

Figure 2 Finisher Lever

Replacement

1. Align the Printer Docking Bracket with the cut outs in the Finisher Docking Bracket.
2. Mate the Printer and the Finisher until it latches.
3. Check that the Finisher is firmly latched to the Printer.
4. Perform the remainder of the replacement procedure in reverse order of removal.

REP 23.6 (LX) Front Cover Assembly

Parts List on PL 23.6

Removal

NOTE: *When turning the power OFF, turn the Power Switch OFF first, and then the Main Power Switch.*

1. Press the **Job Status** button to check that there are no jobs in progress.
2. Switch off the power and disconnect the power cord.
3. Undock the Finisher (REP 23.5).

CAUTION

Do not drop the Booklet Maker Thumb screw into the Finisher.

4. Remove the Booklet Maker and set aside (REP 23.31).
5. Open the Finisher upper Front Door.
6. Remove the screws (5).
7. Remove the Front Cover Assembly.

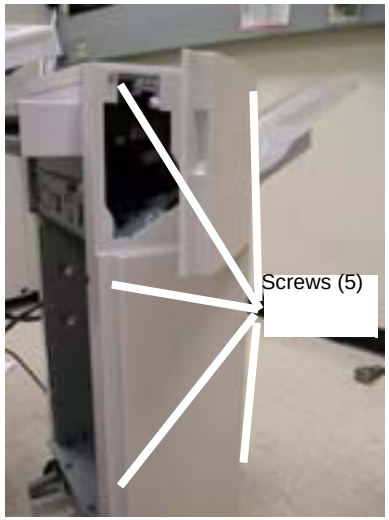

Figure 1 Front Cover

Replacement

1. To install, carry out the removal steps in reverse order.

REP 23.7 (LX) Rear Upper Cover

Parts List on PL 23.6

Removal

1. Switch off the power and disconnect the power cord.
2. Undock the Finisher (REP 23.5).
3. Remove the Booklet Maker (REP 23.31).
4. Remove the Rear Upper Cover.
   (1) Remove the screws (4).
   (2) Remove the Rear Upper Cover.

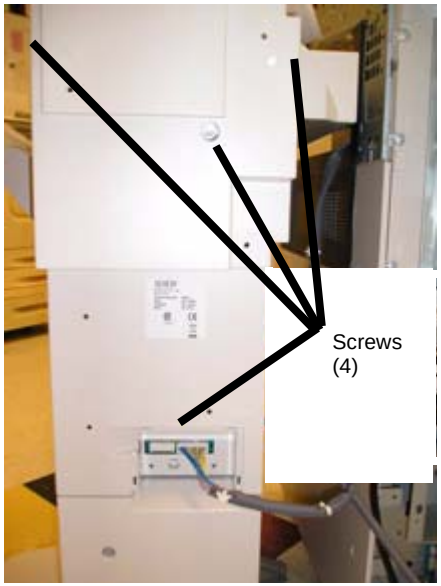

Figure 1 Rear Upper Cover

Replacement

1. To install, carry out the removal steps in reverse order.

REP 23.8 (LX) Rear Lower Cover

Parts List on PL 23.6

Removal

NOTE: *When turning the power OFF, turn the Power Switch OFF first, and then the Main Power Switch.*

1. Press the **Job Status** button to check that there are no jobs in progress.
2. Switch off the power and disconnect the power cord.
3. Undock the Finisher (REP 23.5).
4. Remove the Rear Lower Cover.
   a. Remove the screws (3).
   b. Remove the Cover.

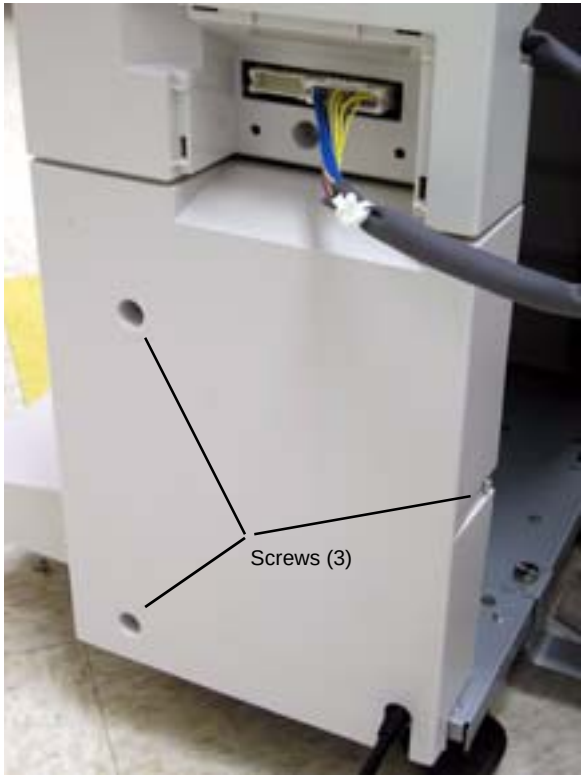

Figure 1 Rear Lower Cover

Replacement

1. To install, carry out the removal steps in reverse order.

REP 23.9 (LX) Eject Cover

Parts List on PL 23.10

Removal

NOTE: *When turning the power OFF, turn the Power Switch OFF first, and then the Main Power Switch.*

1. Press the **Job Status** button to check that there are no jobs in progress.
2. Switch off the power and disconnect the power cord.
3. Remove the Eject Cover (Figure 1).
   a. Unlatch the Eject Cover, and move it to the left.
   b. Remove the Retaining Screw (1).
   c. Push the Latch through the hole in the Cover.
   d. Remove the Cover by moving it to the left.

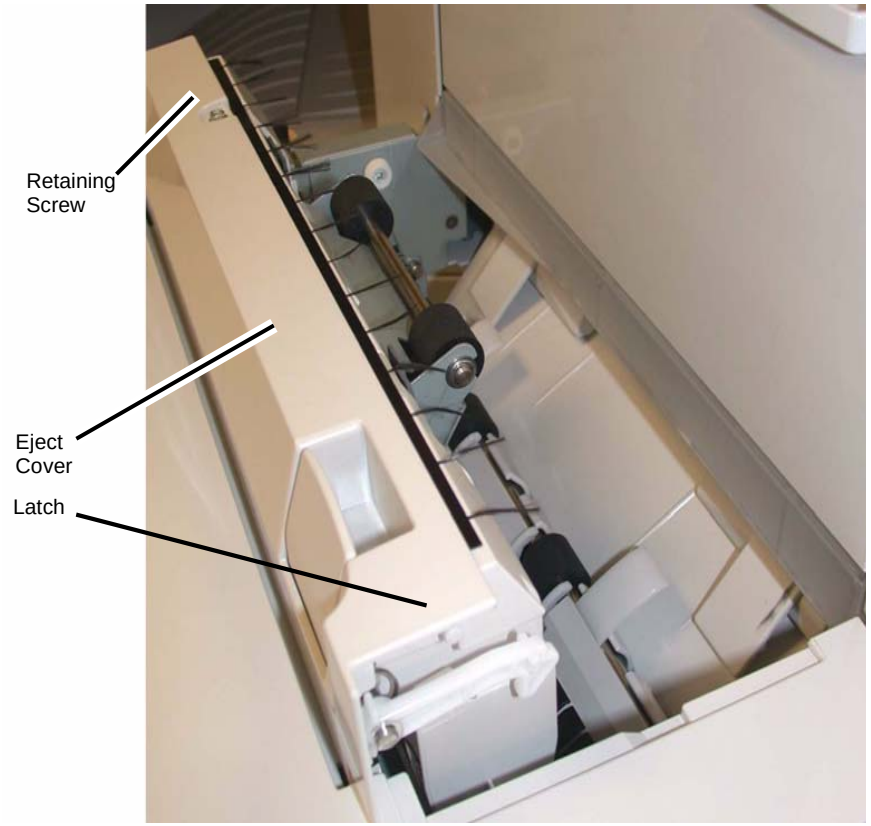

Figure 1 Removing the Eject Cover

Replacement

1. Align the Eject Cover with the Pins (2) on both sides, and slide it to the right (Figure 2).

   NOTE: *The left side of the Cover is now captured by the Pins and cannot be lifted up.*

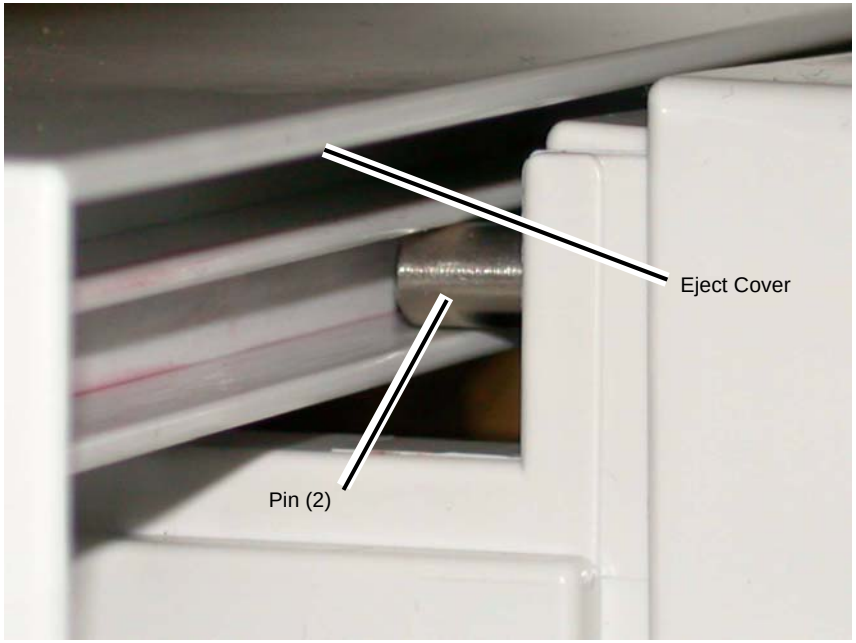

Figure 2 Aligning the Eject Cover

2. Position the Eject Cover so that the Latch is inserted in the hole (Figure 3).

   NOTE: *The Latch must be outside the hole.*

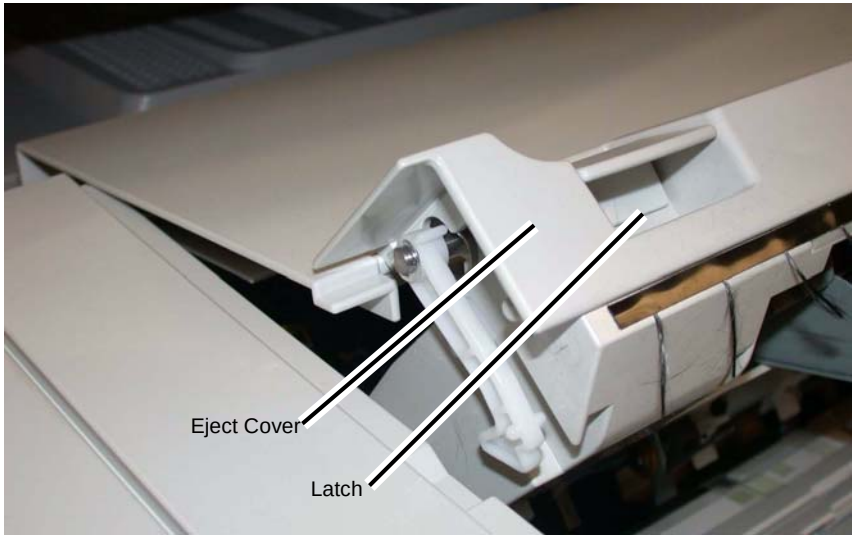

Figure 3 Inserting the Latch through the hole in the Cover

3. Place the Latch Spring in the position shown (Figure 4).

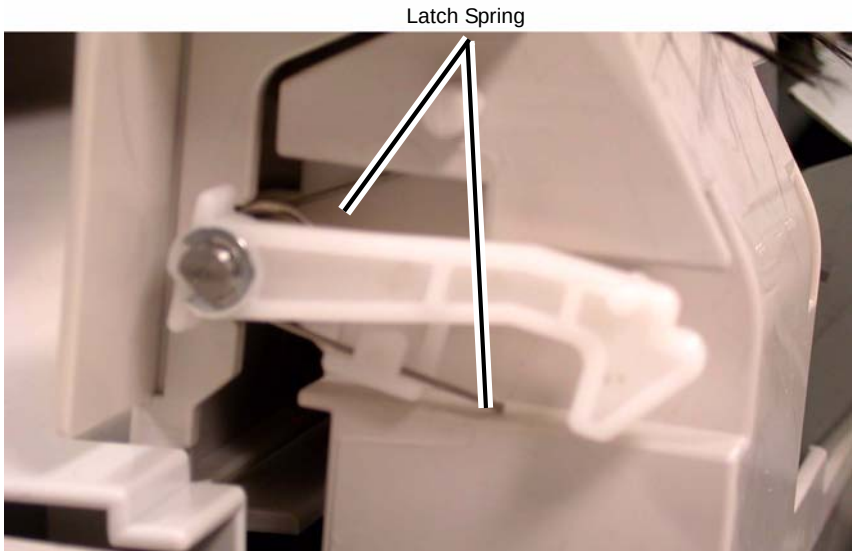

Figure 4 Positioning the Latch Spring

4. Make sure the Latch Hook and Latch Pin are positioned as shown (Figure 5).

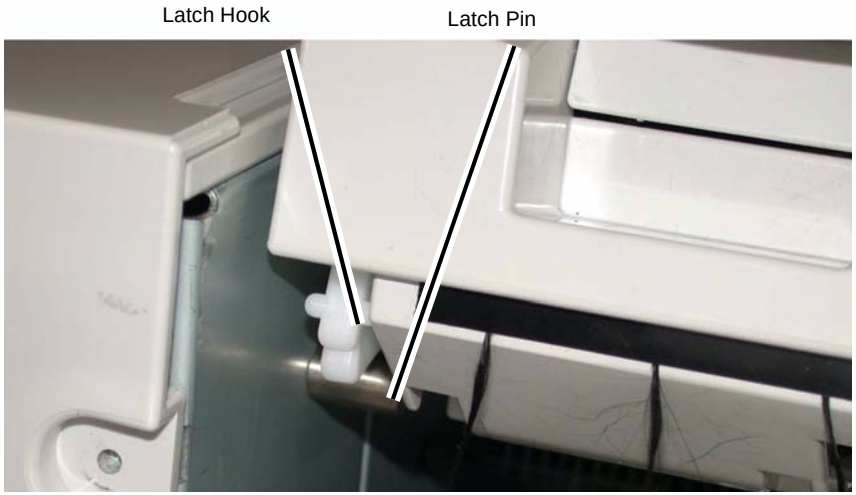

Figure 5 Positioning the Latch Hook and Latch Pin

5. Install the Retaining Screw (1) (Figure 6).

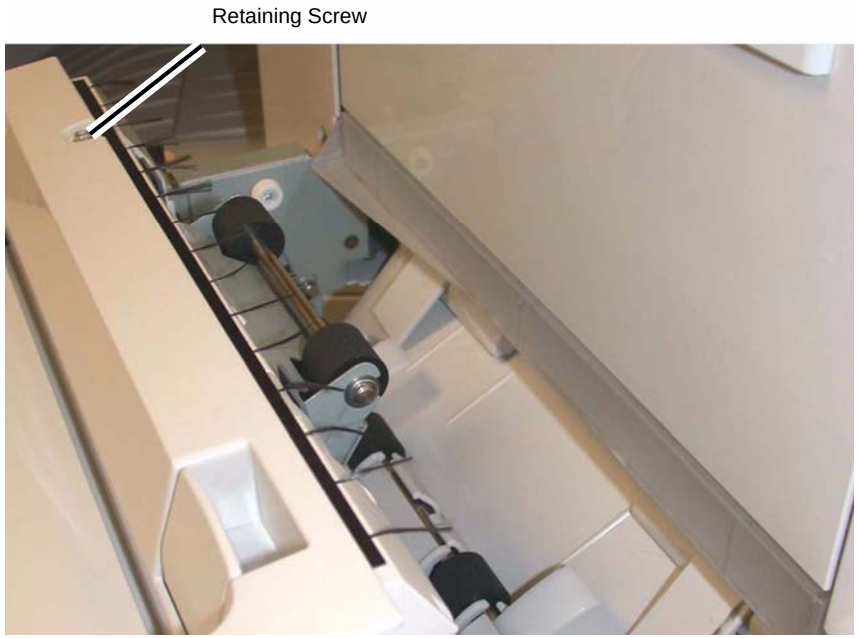

Figure 6 Installing the Retaining Screw

REP 23.10 (LX) Foot Cover

Parts List on PL 23.6

Removal

NOTE: *When turning the power OFF, turn the Power Switch OFF first, and then the Main Power Switch.*

1. Press the **Job Status** button to check that there are no jobs in progress.
2. Switch off the power and disconnect the power cord.
3. Remove the Screw (1) (Figure 1).
4. Remove the Foot Cover.

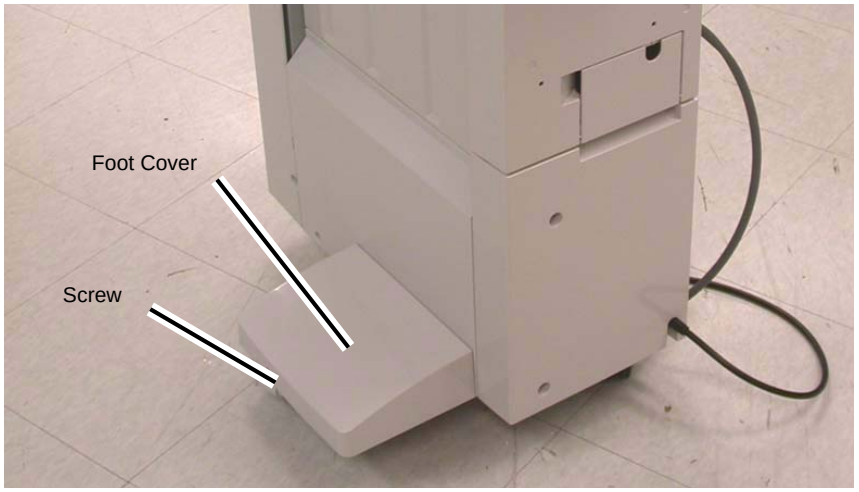

Figure 1 Removing the Foot Cover

Replacement

1. Reverse the removal procedure for replacement.

REP 23.11 (LX) Stacker Lower Cover

Parts List on PL 23.6

Removal

NOTE: *When turning the power OFF, turn the Power Switch OFF first, and then the Main Power Switch.*

1. Press the **Job Status** button to check that there are no jobs in progress.
2. Switch off the power and disconnect the power cord.
3. Remove the Foot Cover (REP 23.10).
4. Remove the Screws (2) (Figure 1).
5. Remove the Stacker Lower Cover.

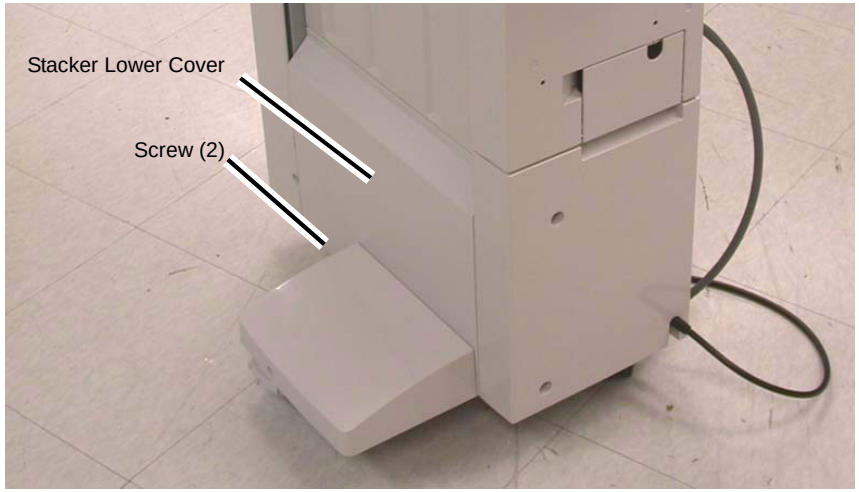

Figure 1 Removing the Stacker Lower Cover

Replacement

1. Reverse the removal procedure for replacement.

REP 23.12 (LX) Stacker Upper Cover

Parts List on PL 23.7

Removal

NOTE: *When turning the power OFF, turn the Power Switch OFF first, and then the Main Power Switch.*

1. Press the **Job Status** button to check that there are no jobs in progress.
2. Switch off the power and disconnect the power cord.
3. Remove the Stacker Tray (REP 23.20).
4. Remove the Stacker Lower Cover (REP 23.11).
5. Remove the Screws (6) (Figure 1).
6. Remove the Stacker Upper Cover.

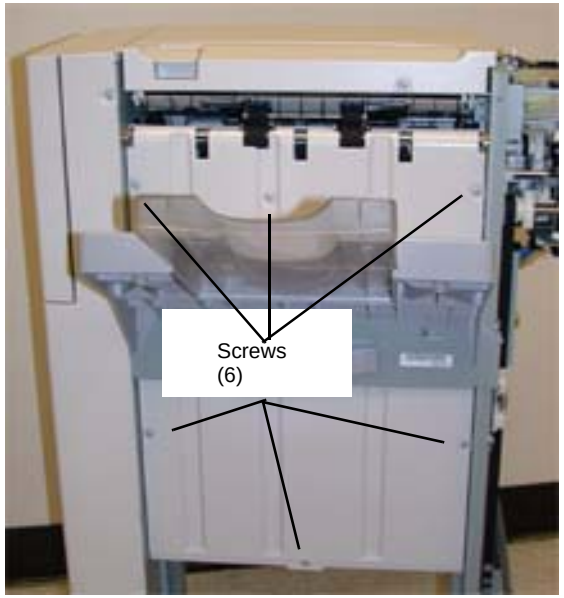

Figure 1 Removing the Stacker Upper Cover

Replacement

1. Reverse the removal procedure for replacement.

REP 23.13 (LX) Stack Height Sensors 1 and 2

Parts List on PL 23.11

Removal

NOTE: *When turning the power OFF, turn the Power Switch OFF first, and then the Main Power Switch.*

1. Press the **Job Status** button to check that there are no jobs in progress.
2. Switch off the power and disconnect the power cord.
3. Remove the Rear Upper Cover (REP 23.7).
4. Remove the Stack Height Sensor 1 or 2 (Figure 1).
   a. Disconnect the connector.
   b. Remove the Sensor.

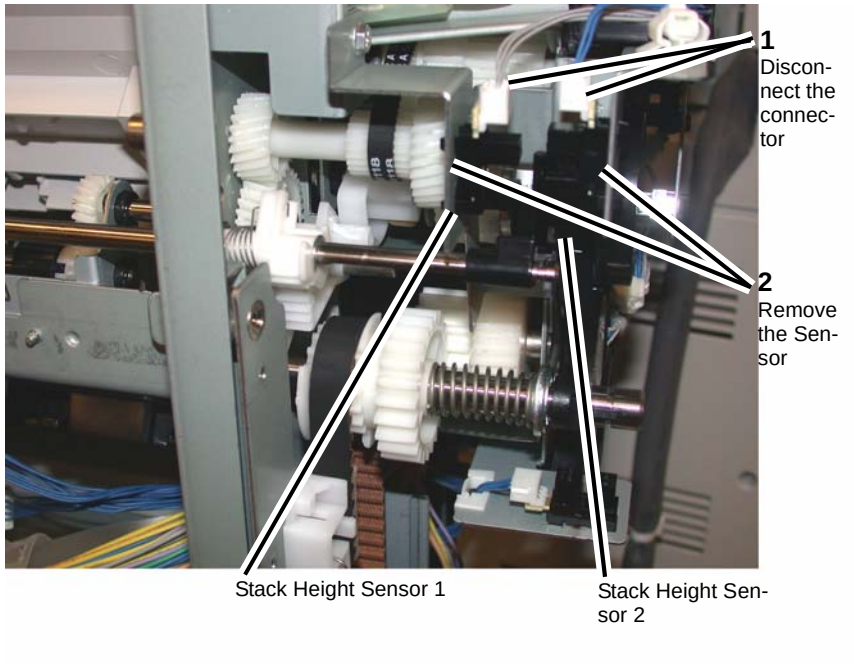

Figure 1 Removing the Stack Height Sensor 1 or 2

REP 23.14 (LX) Sub Paddle Solenoid Assembly

Parts List on PL 23.10

Removal

NOTE: *When turning the power OFF, turn the Power Switch OFF first, and then the Main Power Switch.*

1. Press the **Job Status** button to check that there are no jobs in progress.
2. Switch off the power and disconnect the power cord.
3. Remove the Eject Cover (REP 23.9).
4. Remove the Sub Paddle Solenoid Assembly (Figure 1).
   a. Disconnect the connector.
   b. Remove the wires from the wire clamps
   c. Remove the screw (1) from the Sub Paddle Solenoid Assembly.
   d. Remove the Sub Paddle Solenoid Assembly.

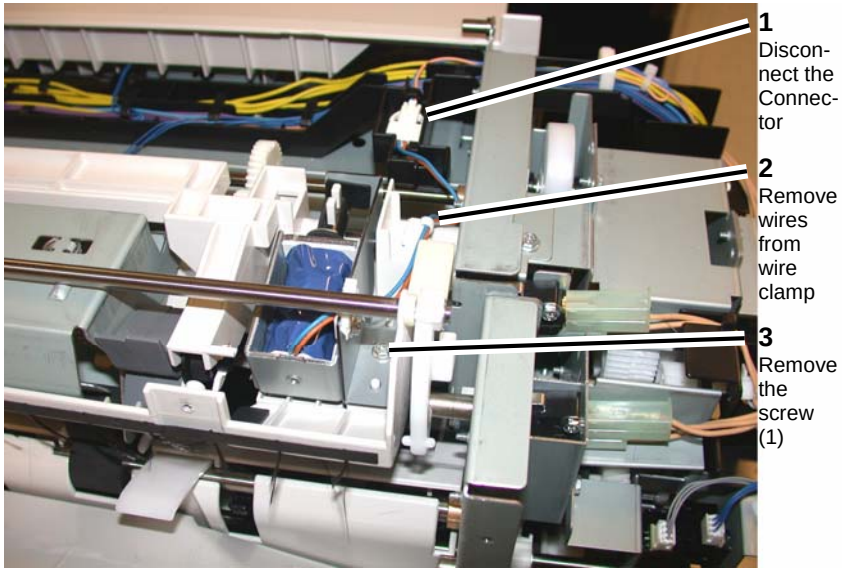

Figure 1 Removing the Sub Paddle Solenoid Assembly

REP 23.15 (LX) Stapler Motor

Parts List on PL 23.8

Removal

NOTE: *When turning the power OFF, turn the Power Switch OFF first, and then the Main Power Switch.*

1. Press the **Job Status** button to check that there are no jobs in progress.
2. Switch off the power and disconnect the power cord.
3. Remove the Finisher Stapler Assembly (REP 23.16).
4. Remove the Screws (2) (Figure 1).

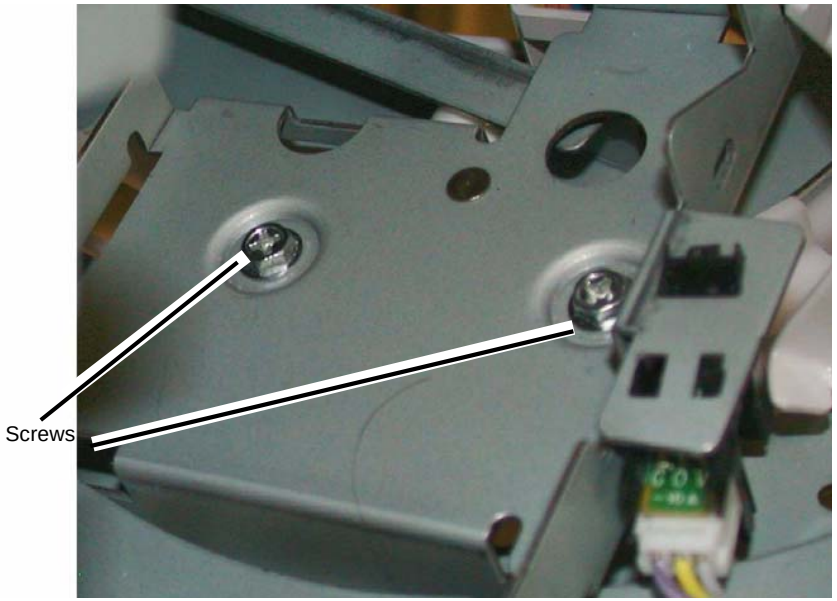

Figure 1 Removing the Screws

5. Remove the Wire Guide (Figure 2).
   a. Pull out the Cable Clamps (3), and remove the wires from the Wire Guide.
   b. Remove the Screws (2).
   c. Remove the Wire Guide.

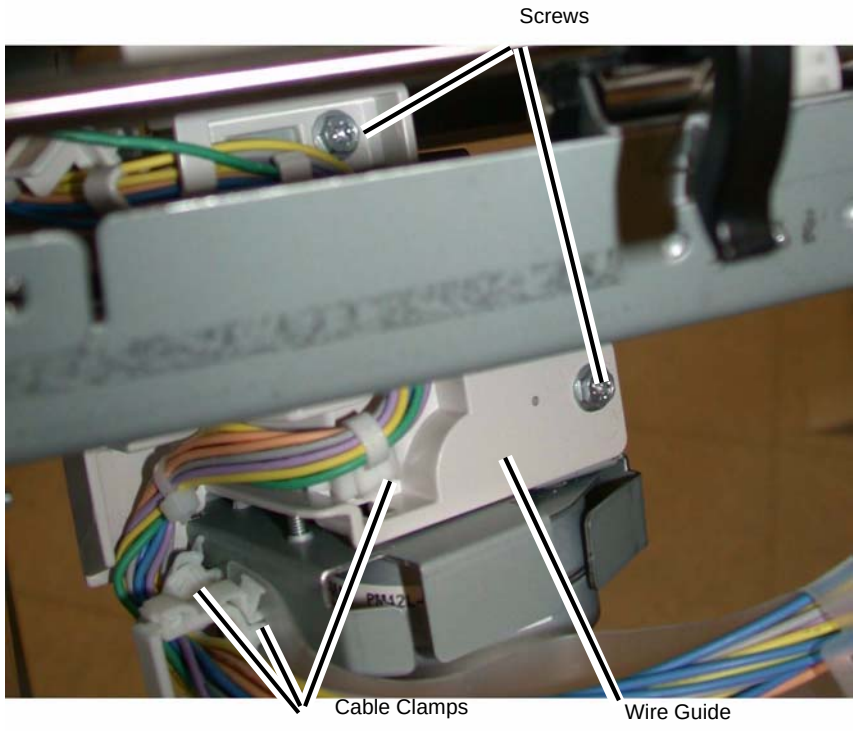

Figure 2 Removing the Wire Guide

6. Remove the Stapler Motor (Figure 3).
   a. Remove the wires from the Cable Clamp.
   b. Disconnect the Connector.
   c. Remove the Screws (2).
   d. Remove the Stapler Motor.

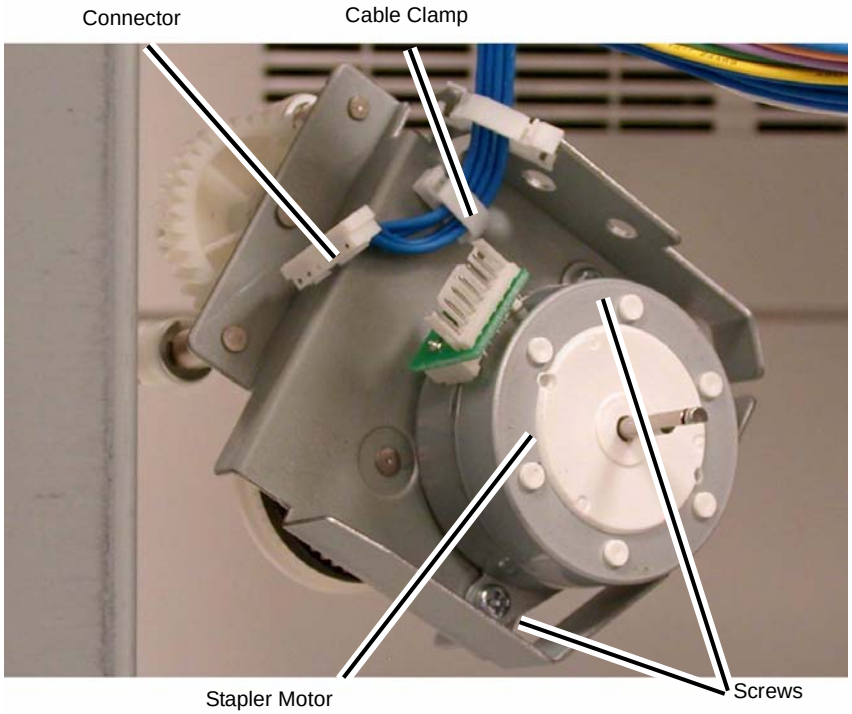

Figure 3 Removing the Stapler Motor

Replacement

1. Reverse the removal procedure for replacement.

REP 23.16 (LX) Finisher Stapler Assembly

Parts List on PL 23.8

Removal

NOTE: *When turning the power OFF, turn the Power Switch OFF first, and then the Main Power Switch.*

1. Press the **Job Status** button to check that there are no jobs in progress.
2. Switch off the power and disconnect the power cord.
3. Remove the Creaser Knife Assembly (REP 23.18).
4. Remove the Front Cover Assembly (REP 23.6).
5. Remove the Stapler Cover (Figure 1).
   a. Remove the Screw.
   b. Remove the Stapler Cover.

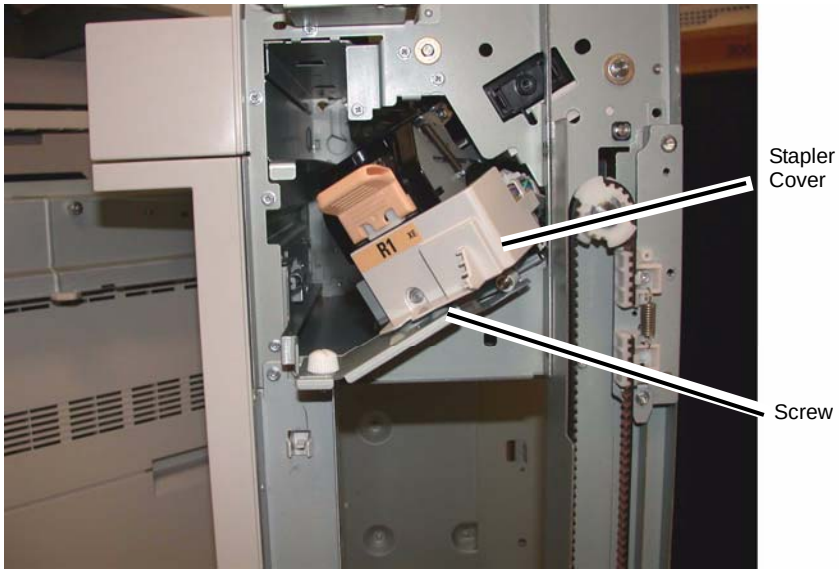

Figure 1 Removing the Stapler Cover

6. Remove the Finisher Stapler Assembly (Figure 2).
   a. Disconnect the Connectors (2).
   b. Remove the Screws (3).
   c. Remove the Finisher Stapler Assembly.

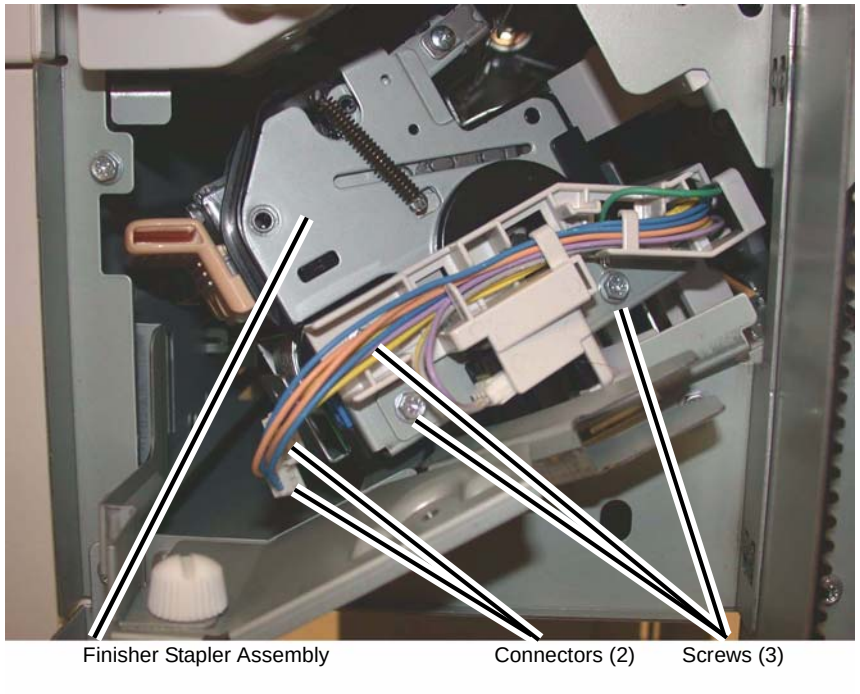

Figure 2 Removing the Finisher Stapler Assembly

Replacement

Reverse the removal procedure for replacement.

REP 23.17 (LX) Compiler Tray Assembly

Parts List on PL 23.12

Removal

NOTE: *When turning the power OFF, turn the Power Switch OFF first, and then the Main Power Switch.*

1. Press the **Job Status** button to check that there are no jobs in progress.
2. Switch off the power and disconnect the power cord.
3. Undock the Finisher (REP 23.5).
4. Remove the Front Cover (REP 23.6).
5. Remove the Rear Upper Cover (REP 23.7).
6. Remove the Foot Cover (REP 23.10).
7. Remove the Stacker Lower Cover (REP 23.11).
8. Remove the Stacker Tray (REP 23.20).
9. Remove the Stacker Upper Cover (REP 23.12).
10. Remove the Eject Cover (REP 23.9).
11. Preparing to remove the Eject Roller Shaft (Figure 1).

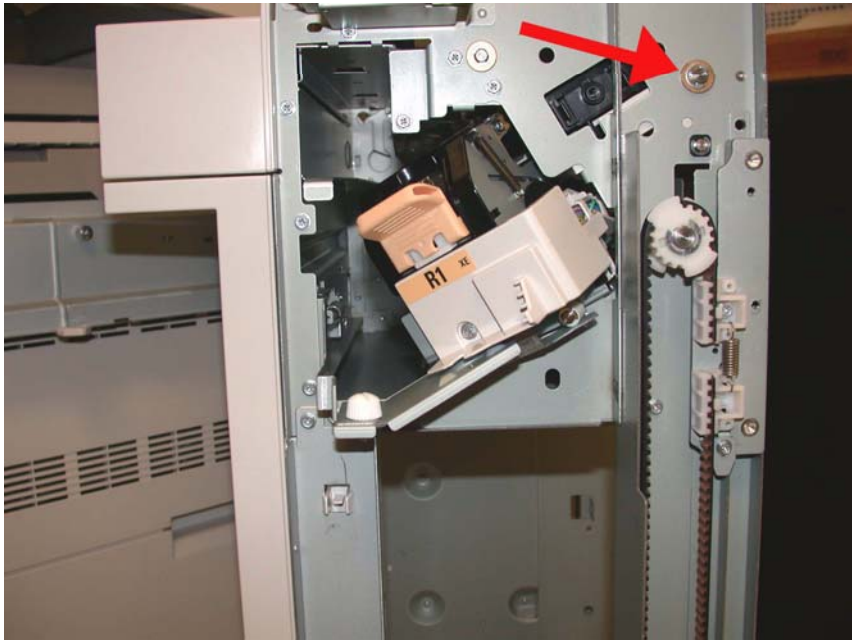

Figure 1 Removing the E-ring and brass bearing

12. Remove the Eject Roll Shaft (Figure 2).
    a. Remove the E-ring and brass bearing from the front of the shaft.
    b. Remove the E-ring,

c. Slide the Eject Roller shaft toward the front.
d. Remove the Gear, and brass bushing.
e. Remove the Eject Roll from the Finisher.

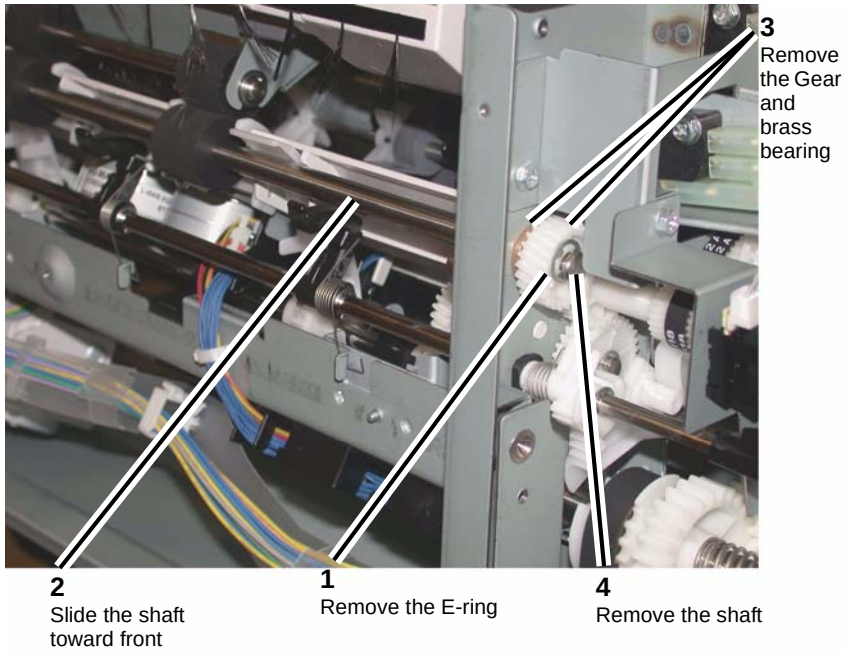

Figure 2 Removing the Eject Roll Shaft

13. Remove the Compiler Tray screw (Figure 3).

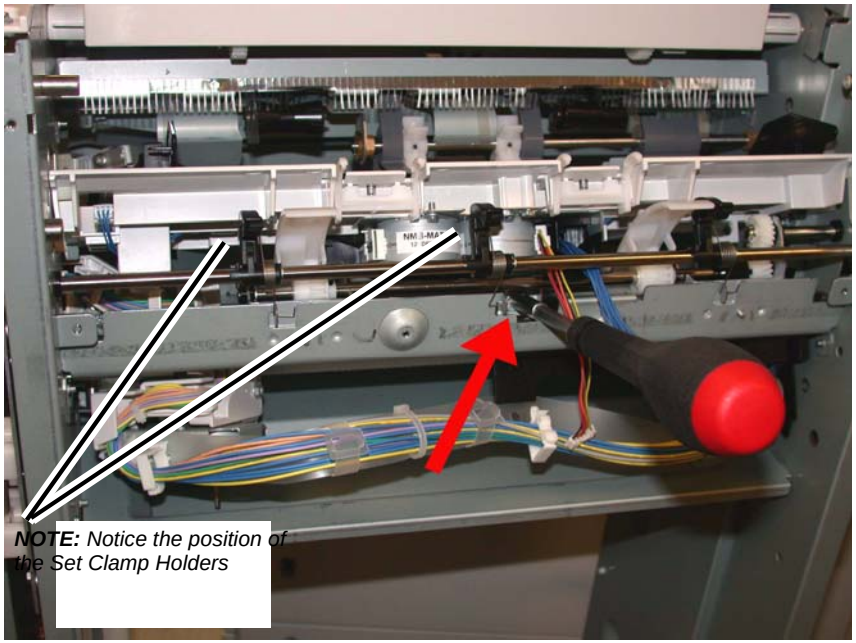

Figure 3 Removing the Compiler Tray screw

NOTE: *Notice the position and orientation of the Set Clamp Holders.*

14. Disconnect the springs from the Set Clamp Holders (3) (Figure 4).

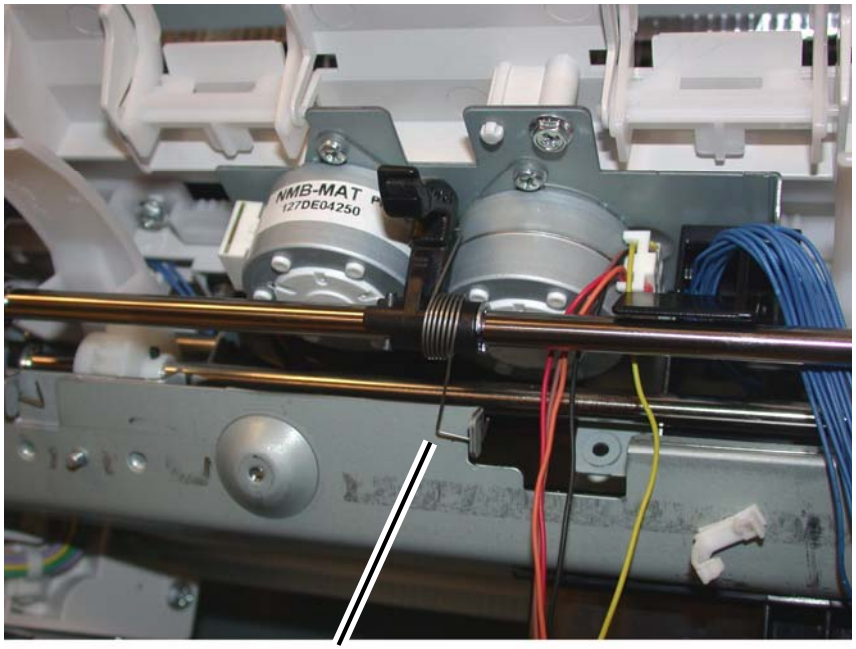

Figure 4 Disconnecting the Set Clamp Holder Springs

15. Remove the front E-ring and the bushing from the Set Clamp Shaft Assembly (Figure 5).

Figure 5 Removing the front E-ring from the Set Clamp Shaft

NOTE: *Notice the position and orientation of the Set Clamp Shaft gear and the cam gear that it engages. When installing the Set Clamp Shaft these gears must engage in the same manner (Figure 6).*

16. Remove the rear E-ring from the Set Clamp Shaft (Figure 7).

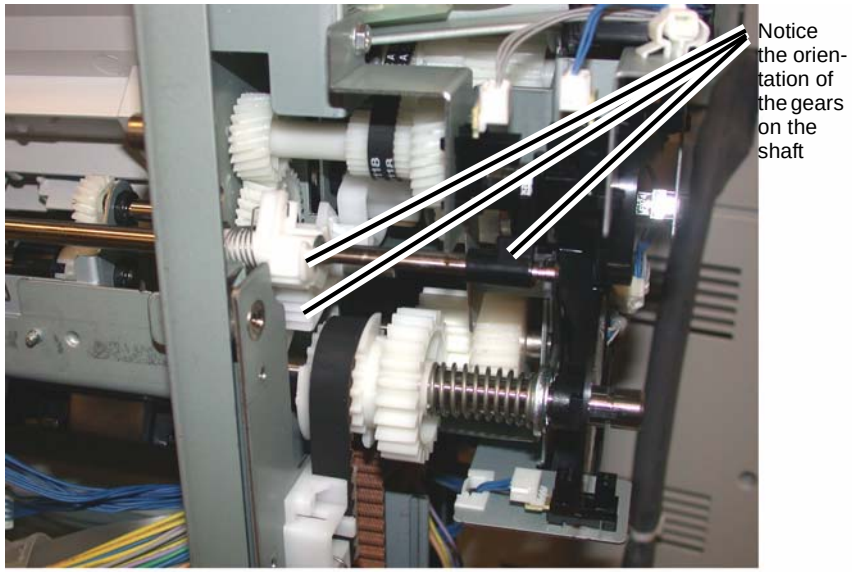

Figure 6 Set Clamp Shaft gear orientation

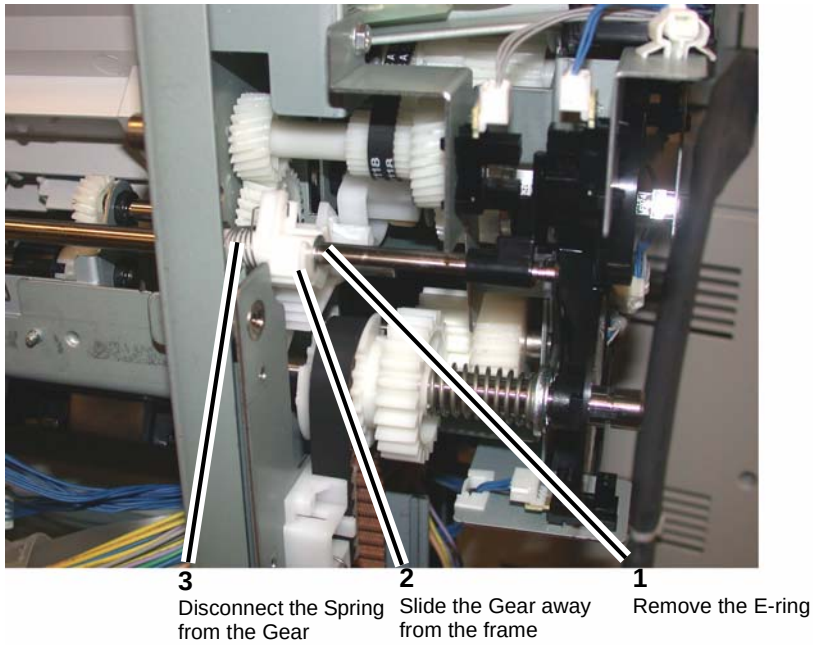

Figure 7 Preparing to remove the Set Clamp Shaft

17. Slide the Gear, Spring and the Bushing away from the frame (Figure 8).

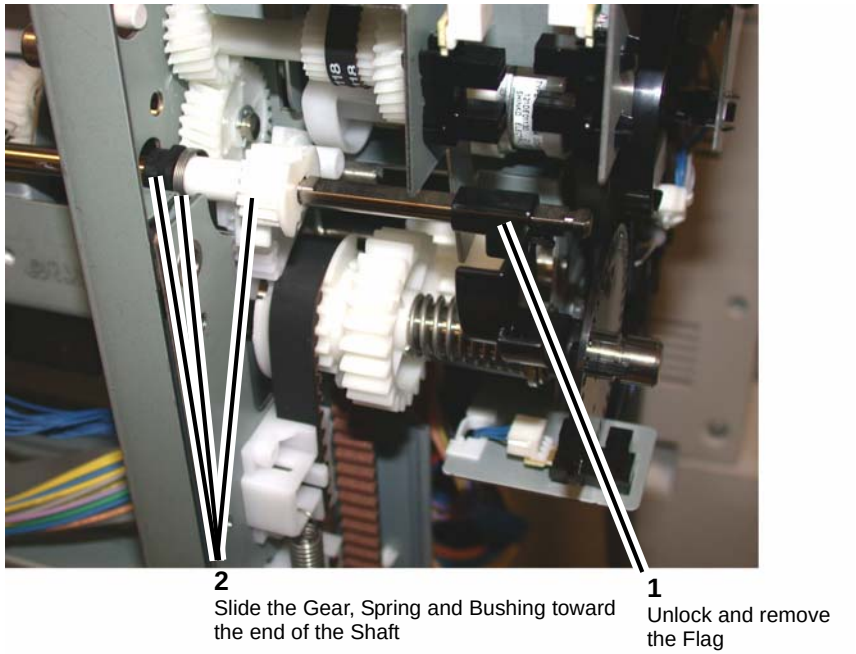

Figure 8 Preparing to remove the Set Clamp Shaft

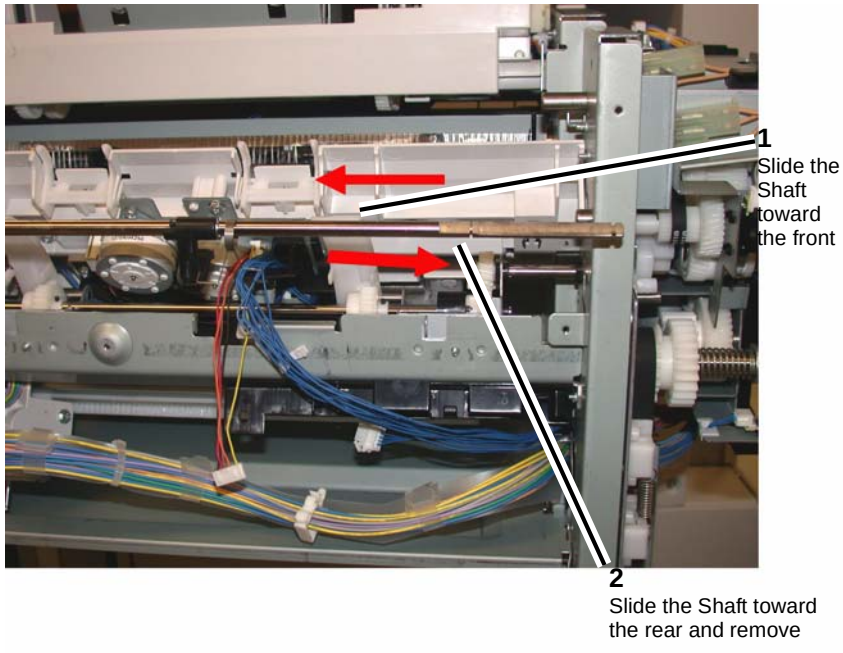

Figure 9 Removing the Set Clamp Shaft

18. Slide the Set Clamp Shaft to the front to clear the rear frame then slide the Shaft to the rear and remove it from the Finisher (Figure 9).

19. Remove the Compiler Tray Assembly (Figure 10).

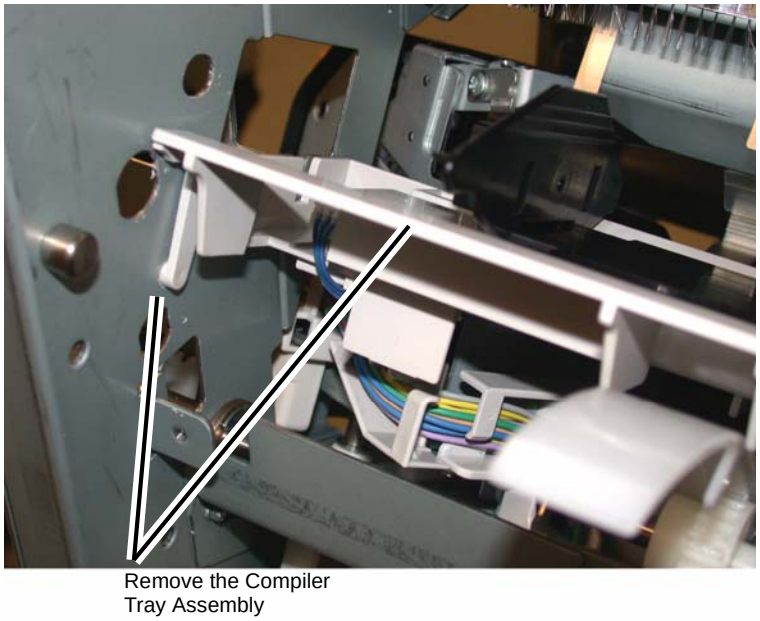

Figure 10 Remove the Compiler Tray Assembly

20. Usually this level of Compiler Tray Assembly removal is for the purpose of removing the Front or Rear Tamper Motors, or the Front or Rear Tamper Home Sensors or the Compiler Tray No Paper Sensor.

    However if the Compiler Tray Assembly must be completely removed from the Finisher, it will be necessary to disconnect all of the wire harness connectors to the Tamper Motors, Tamper Home Sensors and No Paper Sensor and disconnect the wires from all wire harness guides.

Replacement

1. Route the wire harness through the wire guides and connect the proper connectors to the No Paper Sensor, the Tamper Home Sensors and the Tamper Motors.
2. Place the Compiler Tray Assembly into position.
3. Install the Set Clamp Shaft front end into the front frame (Figure 11).
4. Slide the Shaft toward the front until the rear end of the Shaft can be inserted into the rear frame (Figure 11).

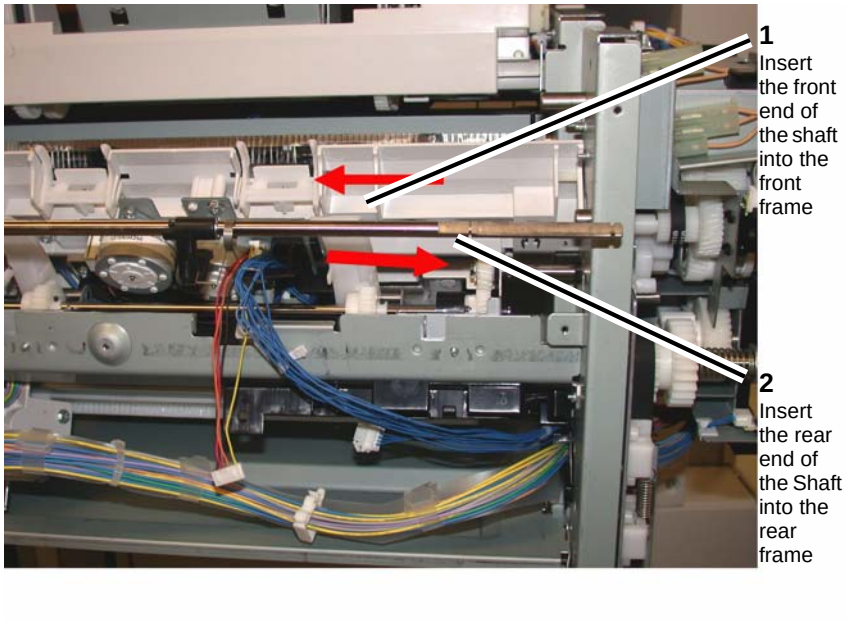

Figure 11 Installing the Set Clamp Shaft into position

5. Slide the 3 Set Clamp Holders with Springs into the correct location on the Shaft (Figure 12).

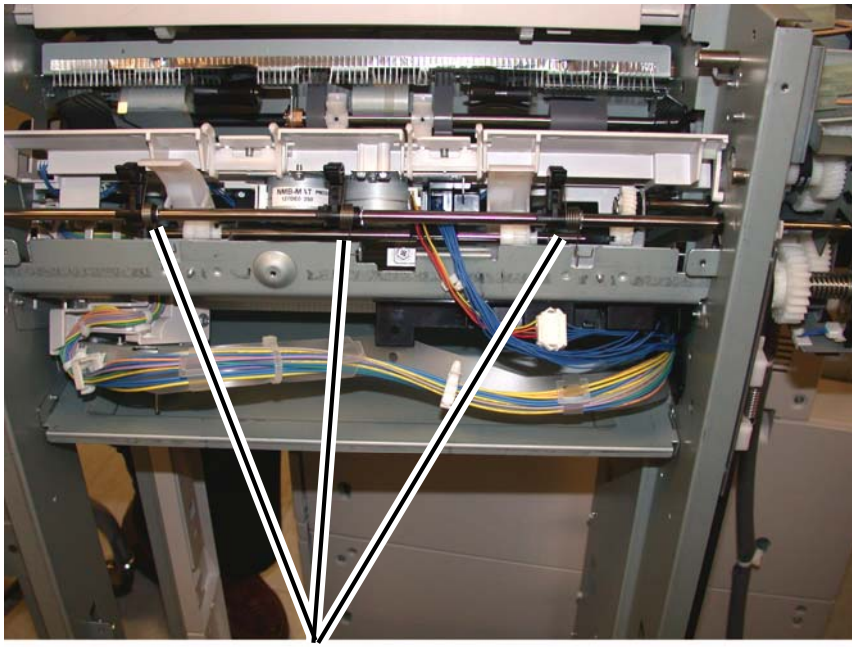

Holders and Springs in correct location on the Shaft

Figure 12 Preparing to install the Holder Springs

6. Install the Bushing, Spring and Gear onto the rear end of the Set Clamp Shaft (Figure 13).

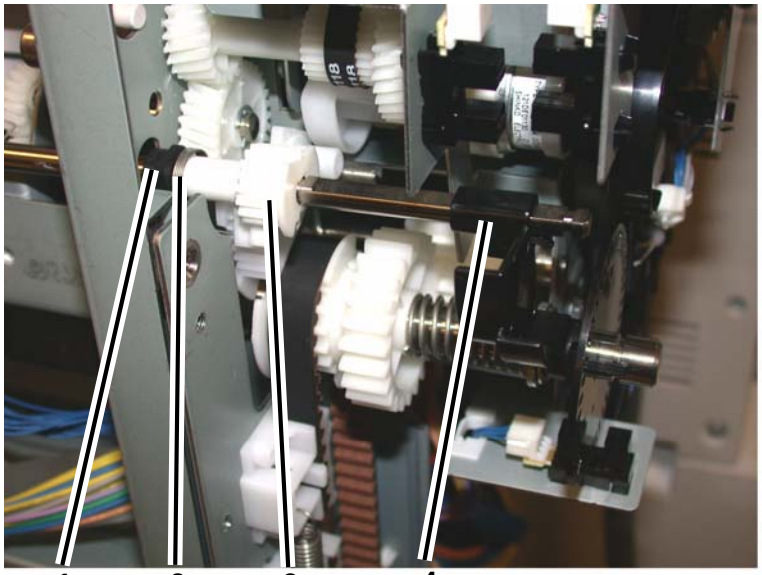

1 Bearing
2 Spring
3 Gear
4 Install the Stack Height Sensor Flag onto the rear end of the Shaft as shown

Figure 13 Installing the Bushing, Spring and Gear

7. Rotate the Set Clamp Shaft until the Stack Height Sensor Flag is in the correct position then position the 2 gears into the configuration (Figure 14).

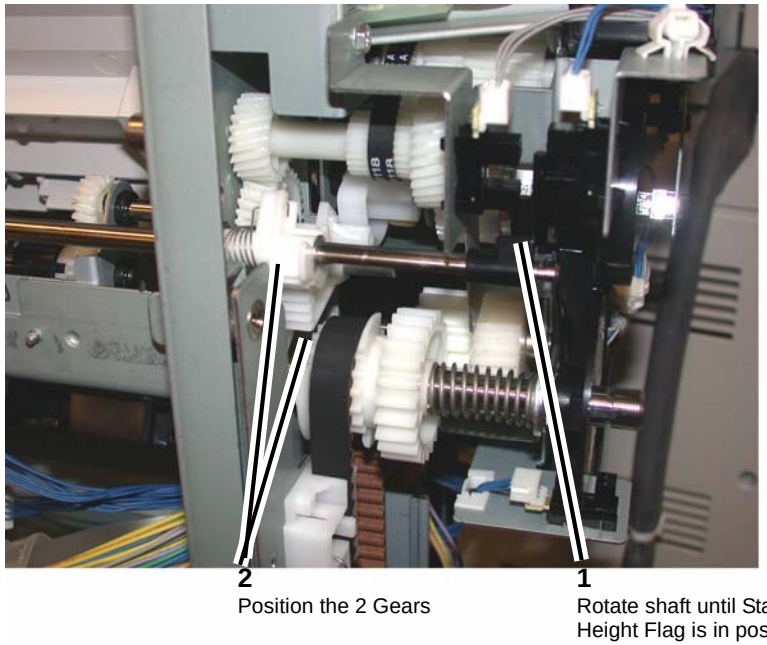

Figure 14 Aligning the Gears and Stack Height Sensor Flag

8. Attach the Spring to the gear and slide the Gear into position.
9. Ensure that the 2 Gears and Stack Height Sensor Flag is in the position shown (Figure 15) and install the E-ring.

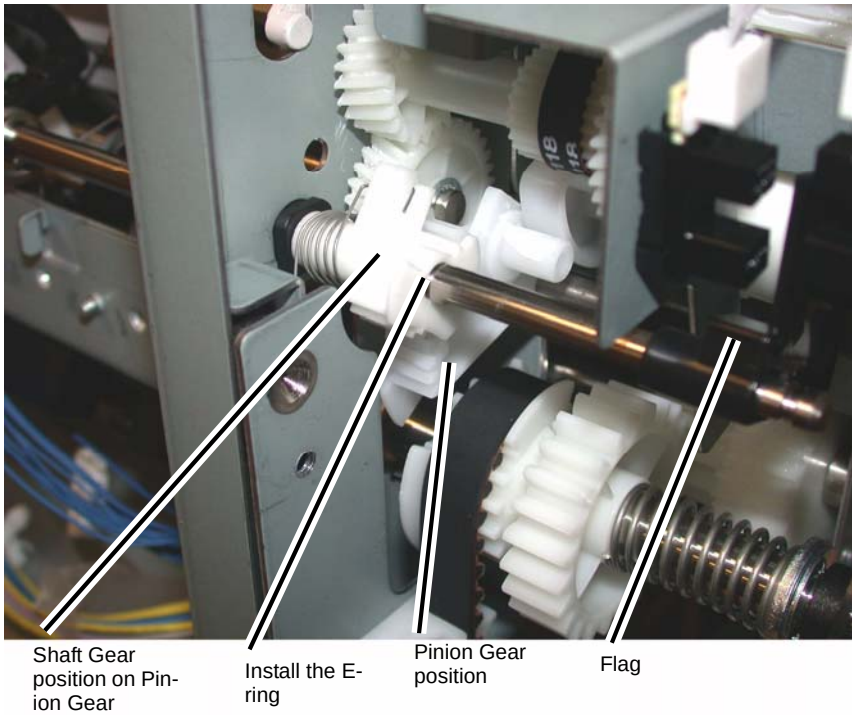

Figure 15 Orientation of 2 Gears and Stack Height Sensor Flag

10. Install the Bushing onto the front end of the Set Clamp Shaft and install the E-ring (Figure 16).

Figure 16 Installing the Bushing and E-ring

11. Ensure that the Set Clamp Holder Springs are connected (Figure 17).

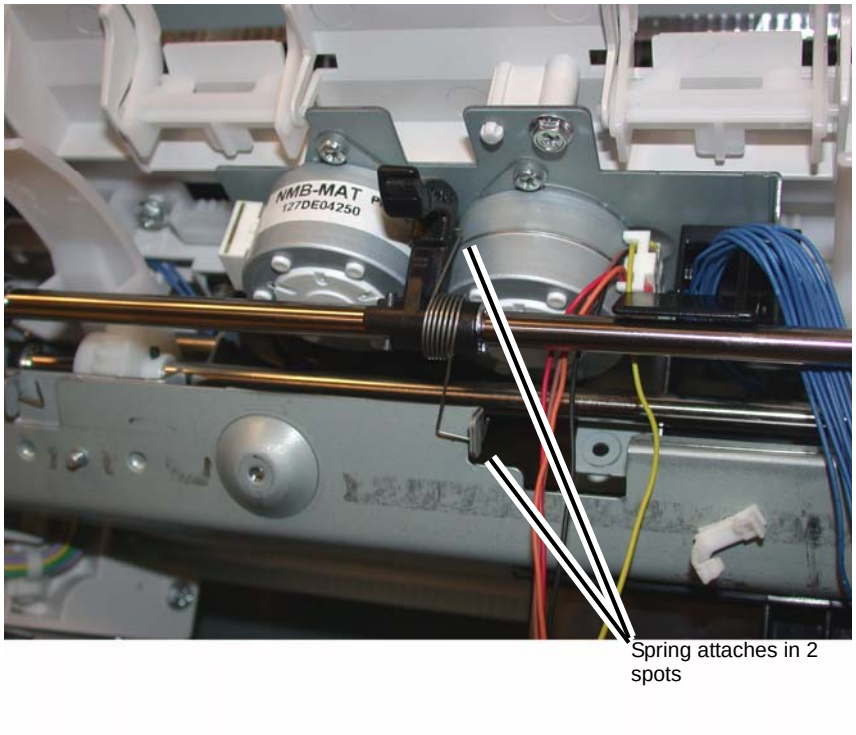

Figure 17 Attaching the Set Clamp Holder Springs

12. Install the Eject Roll Shaft.
    a. Place the Eject Roll Shaft into position in the front and rear frame (Figure 18).

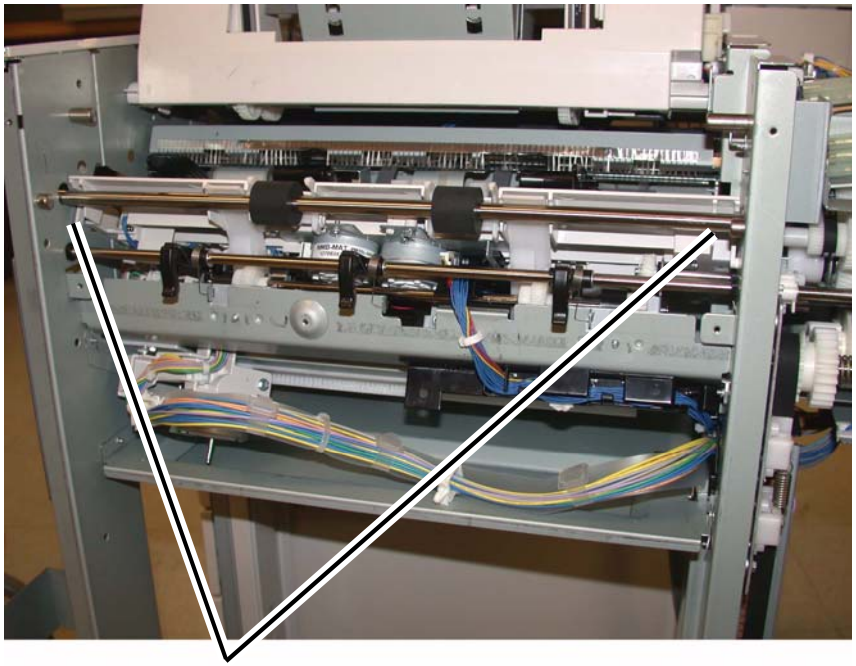

Figure 18 Preparing to install the Eject Roll Shaft

b. Install the brass bearing, the Gear and the E-ring onto the rear of the Eject Roll Shaft (Figure 19).

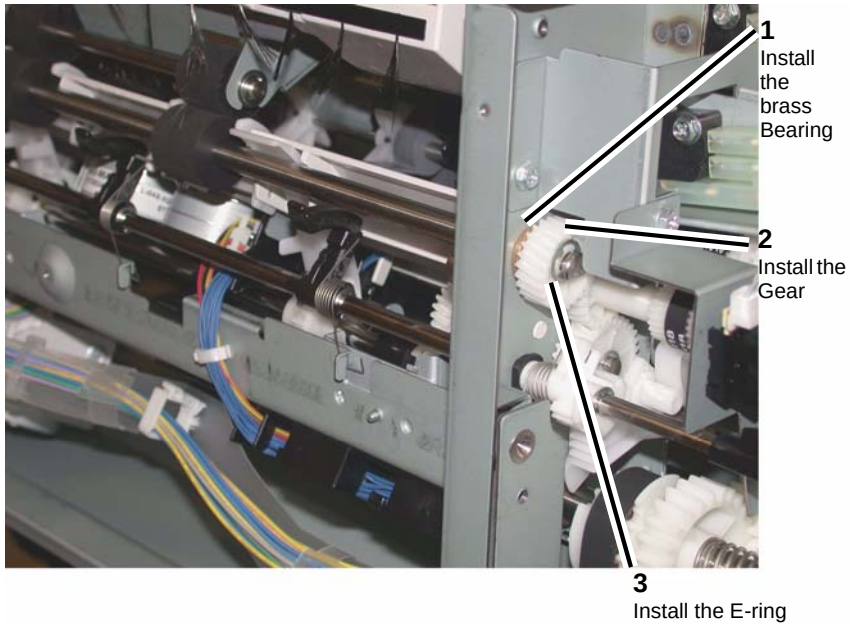

Figure 19 Installing the Eject Roll Shaft rear parts

c. Install the brass bearing and E-ring onto the front of the Eject Roll Shaft (Figure 20).

Figure 20 Installing the brass bearing and E-ring

13. Install the Compiler Tray screw (1).
14. Install the Eject Cover (REP 23.9).
15. Install the Stacker Upper Cover (REP 23.12).
16. Install the Stacker Tray (REP 23.20).
17. Install the Stacker Lower Cover (REP 23.11).
18. Install the Foot Cover (REP 23.10).
19. Install the Rear Upper Cover (REP 23.7).
20. Install the Front Cover (REP 23.6).
21. Dock the Finisher to the IOT (REP 23.5).

REP 23.18 (LX) Crease Assembly

Parts List on PL 23.14

Removal

NOTE: *When turning the power OFF, turn the Power Switch OFF first, and then the Main Power Switch.*

1. Press the **Job Status** button to check that there are no jobs in progress.
2. Switch off the power and disconnect the power cord.
3. Remove the Crease Assembly (Figure 1).
   a. Open the Finisher Front Door.
   b. Remove the Guard.

      NOTE: *Pull out the Cable Tie to obtain additional slack in the wires.*

   c. Disconnect the Cable.
   d. Remove the Thumbscrew.
   e. Pull the Crease Assembly straight out.

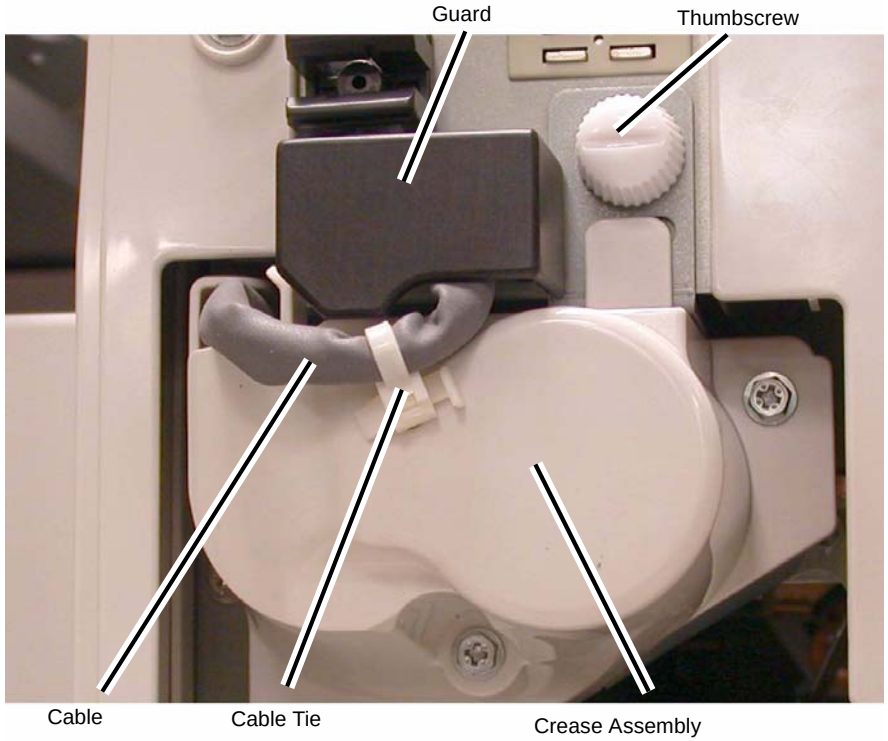

Figure 1 Removing the Crease Assembly

Replacement

NOTE: *Make sure the Locating Pins (2) are properly engaged (Figure 2).*

1. Reverse the removal procedure for replacement.

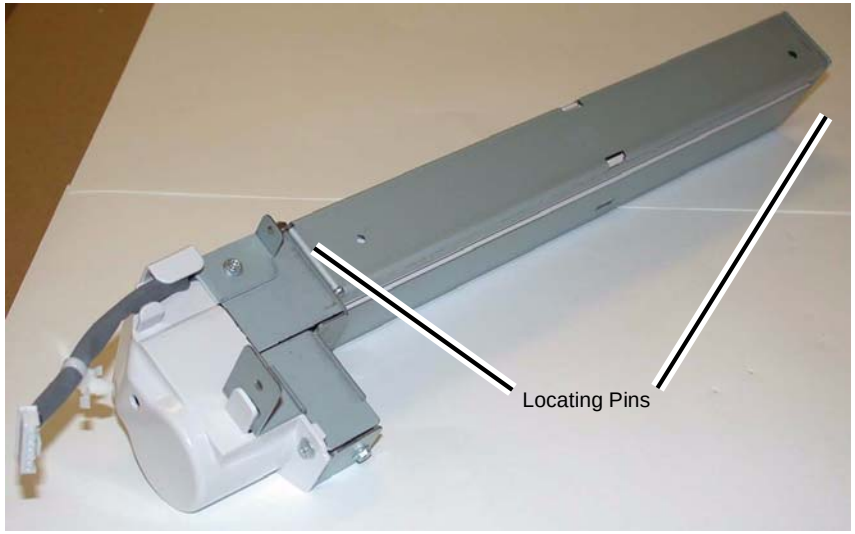

Figure 2 Crease Assembly

REP 23.19 (LX) Stacker Elevator Motor

Parts List on PL 23.7

Removal

CAUTION

Make sure to lower the Carriage Tray to the lowest position before removing the Stacker Elevator Motor Assembly.

1. If the machine has a Booklet Assembly, remove the Booklet Assembly. (REP 23.31)
2. Undock the Finisher . (REP 23.5)
3. Remove the following parts:
   - Rear Upper Cover (PL 23.7)
4. Move the Carriage Tray to the lowest position. (Figure 1)
   a. Move the gear in the direction of the arrow.
   b. Lower the Carriage Tray until it can go no lower.

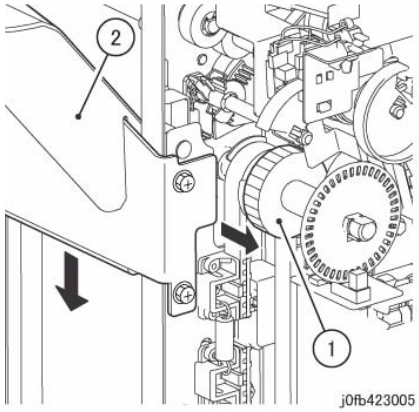

Figure 1 Lower the Tray

5. Remove the Harness Guide. (Figure 2)
   a. Disconnect the connectors (x2) of the Interlock Switch.
   b. Remove the clamp.
   c. Disconnect the connectors (x2).
   d. Remove the screw.
   e. Remove the harness guide.

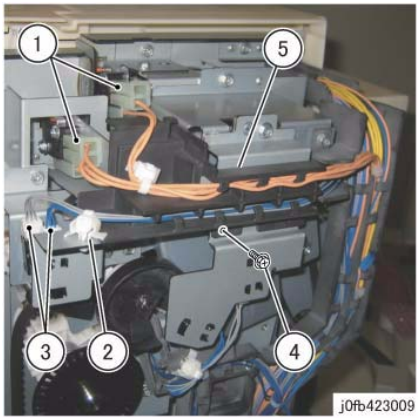

Figure 2 Disconnect Connectors

6. Remove the bracket. (Figure 3)
   a. Disconnect the connectors (x2).
   b. Remove the clamp.
   c. Remove the screws (x2).
   d. Remove the bracket.

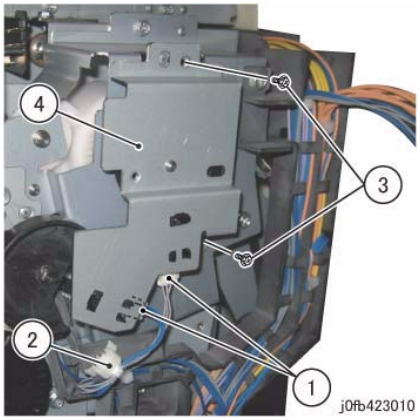

Figure 3 Remove the Bracket

7. Remove the Stacker Encoder Sensor together with its bracket. (Figure 4)
   a. Remove the screw.
   b. Remove the Sensor and bracket.
   c. Release the harness.

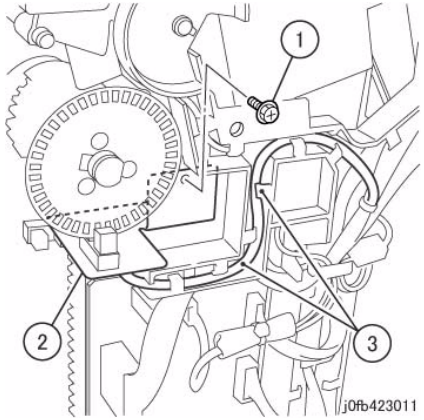

Figure 4 Sensor

8. Disconnect the Set Clamp Clutch and release the harness from the Harness Guide. (Figure 5)
   a. Release the clamp.
   b. Disconnect the connector.
   c. Release the harness from the Harness Guide.

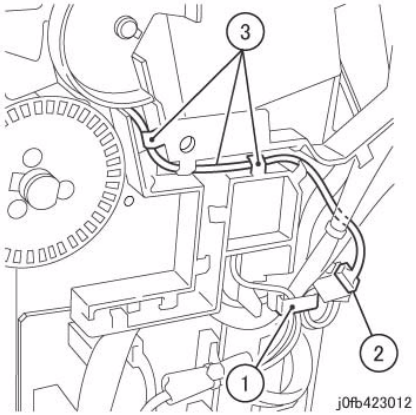

Figure 5 Set Clamp

9. Remove the Harness Guide. (Figure 6)
   a. Disconnect the connector.
   b. Remove the clamp.
   c. Remove the Actuator.
   d. Release the harness from the Harness Guide.
   e. Remove the screws (x2).
   f. Remove the harness guide.

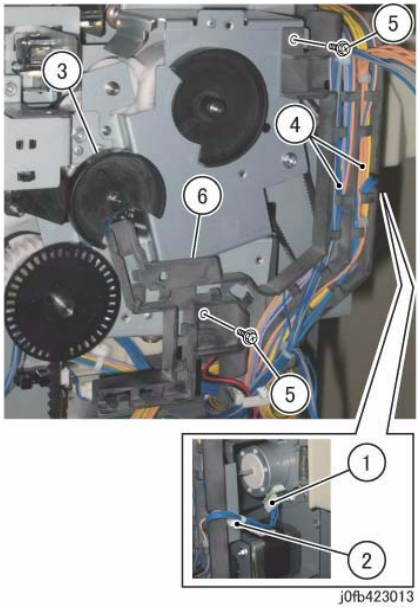

Figure 6 Harness Guide

10. Remove the Stacker Height Sensor 2 together with its bracket. (Figure 7)
    a. Remove the screw.
    b. Remove the Stacker Height Sensor 2 and bracket.

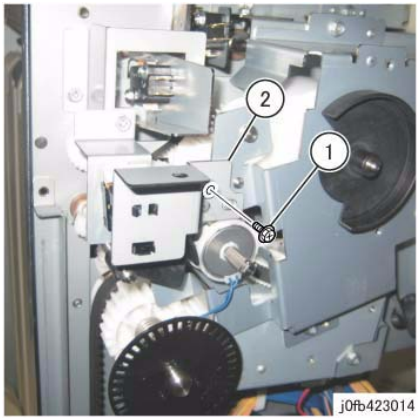

Figure 7 Stack Sensor

11. Remove the Actuators (x2). (Figure 8)
    a. Remove the Actuators (x2).

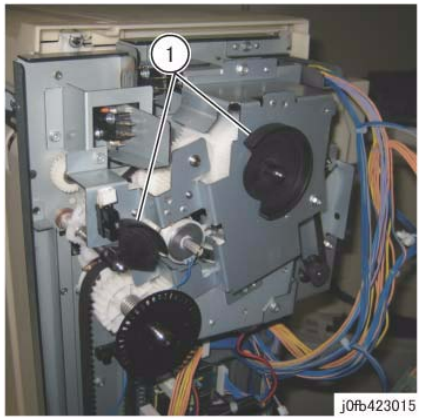

Figure 8 Actuators

12. Remove the screws (x4) and remove the bracket. (Figure 9)

    NOTE: *When removing the bracket, be careful as the gear at the back of the bracket can easily drop and got lost.*

    a. Remove the screws (x4).
    b. Remove the bracket.

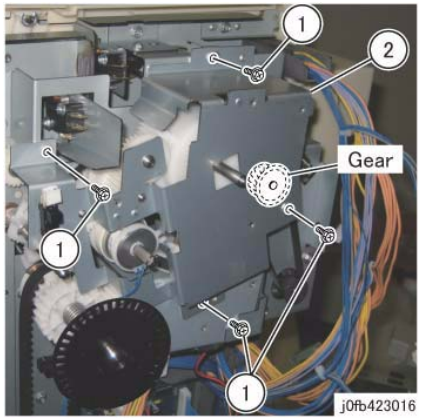

Figure 9 Bracket

13. Remove the Transport Motor Assembly. (Figure 10)
    a. Remove the spring.
    b. Disconnect the connector.
    c. Remove the screws (x3).
    d. Remove the Transport Motor Assembly.

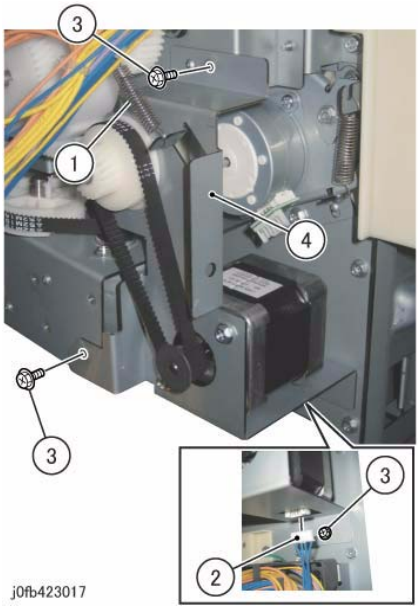

Figure 10 Transport Motor

14. Remove the Stacker Elevator Motor Assembly. (Figure 11)
    a. Disconnect the connector.
    b. Remove the screws (x3).
    c. Remove the Stacker Elevator Motor Assembly.

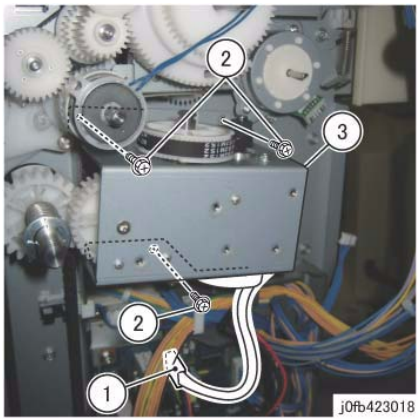

Figure 11 Elevator Motor

15. Remove the belt and the pulley from the Stacker Elevator Motor Assembly. (Figure 12)
    a. Remove the belt.
    b. Remove the pulley.

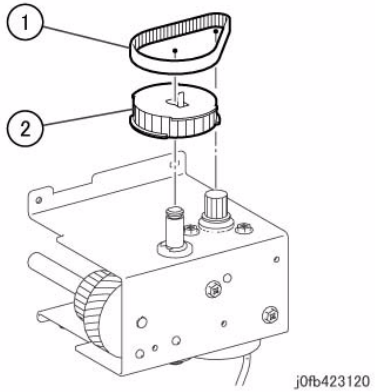

Figure 12 Belt/Pulley

Replacement

1. To install, carry out the removal steps in reverse order. However, take note of the following when performing the installation.

   NOTE: *When installing the bracket, affix the tab of the Set Clamp Clutch to the position shown in the figure. (Figure 13)*

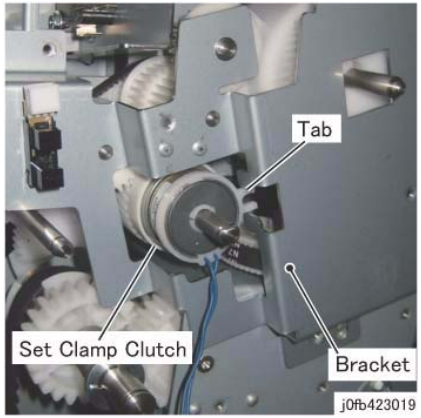

Figure 13 Tab

REP 23.20 (LX) Stacker Tray

Parts List on PL 23.7

Removal

NOTE: *When turning the power OFF, turn the Power Switch OFF first, and then the Main Power Switch.*

1. Press the **Job Status** button to check that there are no jobs in progress.
2. Switch off the power and disconnect the power cord.
3. Remove the following:
   a. Booklet Maker Assembly (if installed) (REP 23.31).
   b. Front Cover Assembly (REP 23.6).
   c. Rear Upper Cover (REP 23.7).
4. Remove the Stacker Tray (Figure 1).
   a. Remove the Screws (4).
   b. Remove the Stacker Tray.

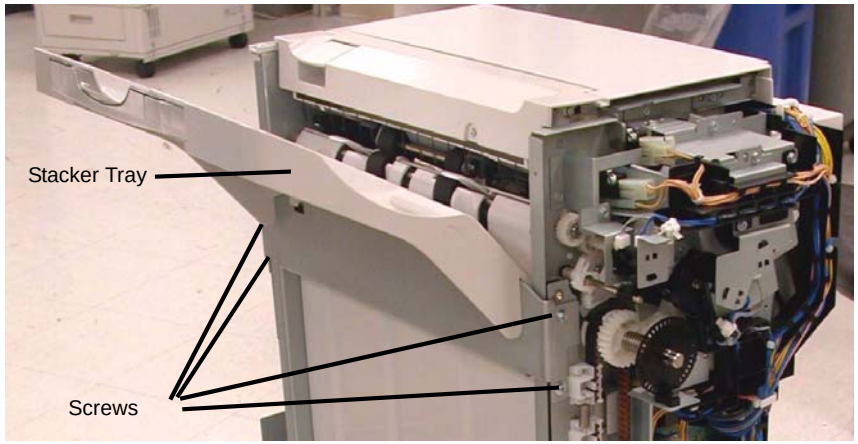

Figure 1 Removing the Stacker Tray

Replacement

Reverse the removal procedure for replacement.

REP 23.21 (LX) Eject Belt

Parts List on PL 23.13

Removal

NOTE: *When turning the power OFF, turn the Power Switch OFF first, and then the Main Power Switch.*

1. Press the **Job Status** button to check that there are no jobs in progress.
2. Switch off the power and disconnect the power cord.
3. Undock the Finisher (REP 23.5).
4. Remove the Booklet Maker (REP 23.31).
5. Remove the Rear upper Cover (REP 23.7).
6. Remove the Eject Motor Assembly (REP 23.22).
7. Remove the Eject Motor (REP 23.25).
8. Remove the Eject Belt.

Replacement

1. To install, carry out the removal steps in reverse order.

REP 23.22 (LX) Eject Motor Assembly

Parts List on PL 23.11

Removal

NOTE: *When turning the power OFF, turn the Power Switch OFF first, and then the Main Power Switch.*

1. Press the **Job Status** button to check that there are no jobs in progress.
2. Switch off the power and disconnect the power cord.
3. Undock the Finisher (REP 23.5).
4. Remove the Booklet Maker (REP 23.31).
5. Remove the Rear Upper Cover (REP 23.7).
6. Preparing to remove the Eject Motor Assembly.
   a. Disconnect the Eject Motor connector
   b. Remove the wire harness from the Harness Guide
   c. Disconnect the wire harness clamps (2)
   d. Remove the screws (2) from the Harness Guide and move the Harness Guide aside.
   e. Disconnect the Spring
   f. Remove the Eject Motor Assembly screws (4)
7. Remove the Eject Motor Assembly.

Replacement

1. To install, carry out the removal steps in reverse order.

REP 23.23 (LX) Finisher PWB

Parts List on PL 23.16

Removal

NOTE: *When turning the power OFF, turn the Power Switch OFF first, and then the Main Power Switch.*

1. Press the **Job Status** button to check that there are no jobs in progress.
2. Switch off the power and disconnect the power cord.
3. Remove the Rear Upper Cover (REP 23.7).
4. Remove the Finisher PWB (Figure 1).
   a. Disconnect the Connectors (9).
   b. Remove the Screws (5).
   c. Remove the Finisher PWB.

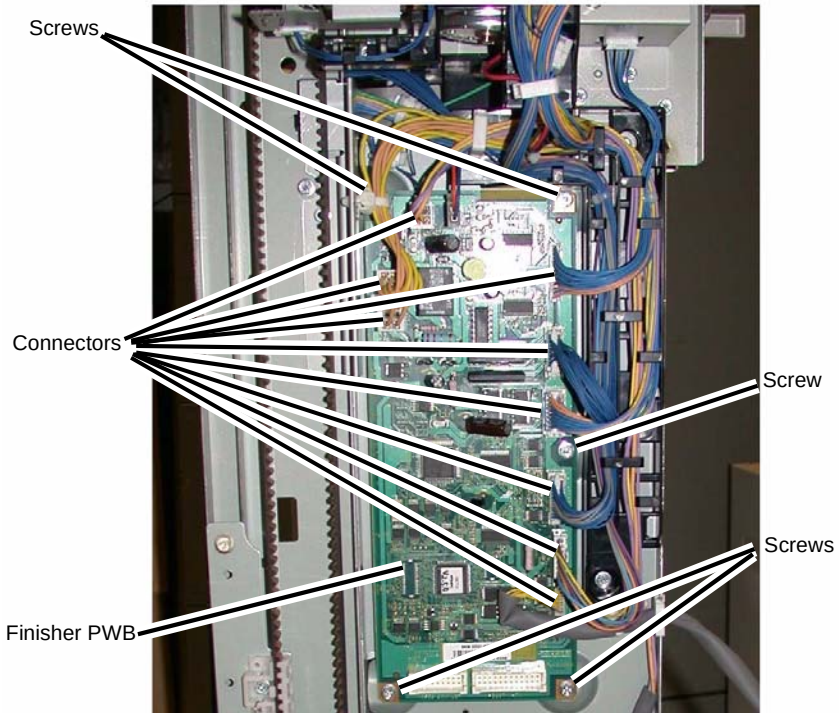

Figure 1 Removing the Finisher PWB

Replacement

1. Reverse the removal procedure for replacement.

REP 23.24 (LX) Finisher LVPS

Parts List on PL 23.16

Removal

NOTE: *When turning the power OFF, turn the Power Switch OFF first, and then the Main Power Switch.*

1. Press the **Job Status** button to check that there are no jobs in progress.
2. Switch off the power and disconnect the power cord.
3. Remove the Rear Lower Cover (REP 23.8).
4. Remove the Finisher LVPS (Figure 1).
   a. Disconnect the Connectors (2).
   b. Remove the Screws (4).
   c. Remove the Finisher LVPS.

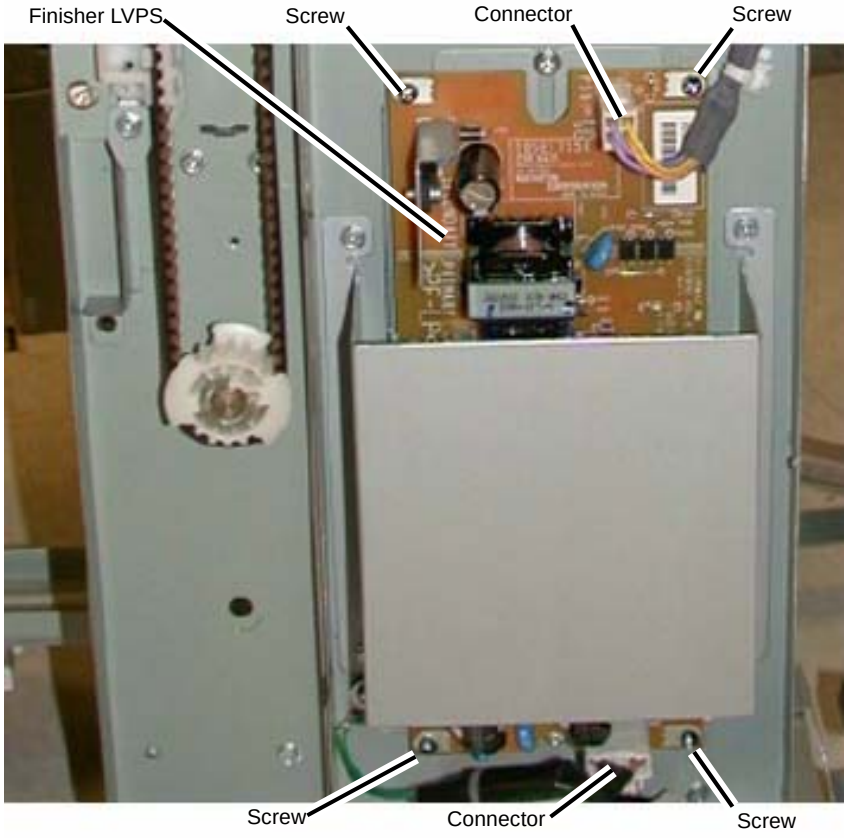

Figure 1 Removing the Finisher LVPS

Replacement

Reverse the removal procedure for replacement.

REP 23.25 (LX) Eject Motor

Parts List on PL 23.11

Removal

NOTE: *When turning the power OFF, turn the Power Switch OFF first, and then the Main Power Switch.*

1. Press the **Job Status** button to check that there are no jobs in progress.
2. Switch off the power and disconnect the power cord.
3. Undock the Finisher (REP 23.5).
4. Remove the Booklet Maker (REP 23.31).
5. Remove the Rear Upper Cover (REP 23.7).
6. Remove the Eject Motor Assembly (REP 23.22).
7. Remove the Eject Motor.
   a. Remove the screws (2)
   b. Remove the Eject motor

Replacement

1. To install, carry out the removal steps in reverse order.

REP 23.26 (LX) Front/Rear Tamper Motor

Parts List on PL 23.12

Removal

NOTE: *When turning the power OFF, turn the Power Switch OFF first, and then the Main Power Switch.*

1. Press the **Job Status** button to check that there are no jobs in progress.
2. Switch off the power and disconnect the power cord.
3. Remove the Compiler Tray (REP 23.17).
4. Turn the Compiler Tray over on a work surface.
5. Remove the Tamper Motor (Figure 1).
   a. Release the wires from the wire guide.
   b. Remove the screw (1) and remove the wire guide.
   c. Disconnect the Tamper Motor connector.

      NOTE: *The Rear Tamper Motor connector has already been disconnected.*

   d. Remove the screws (2).
   e. Remove the Tamper Motor.

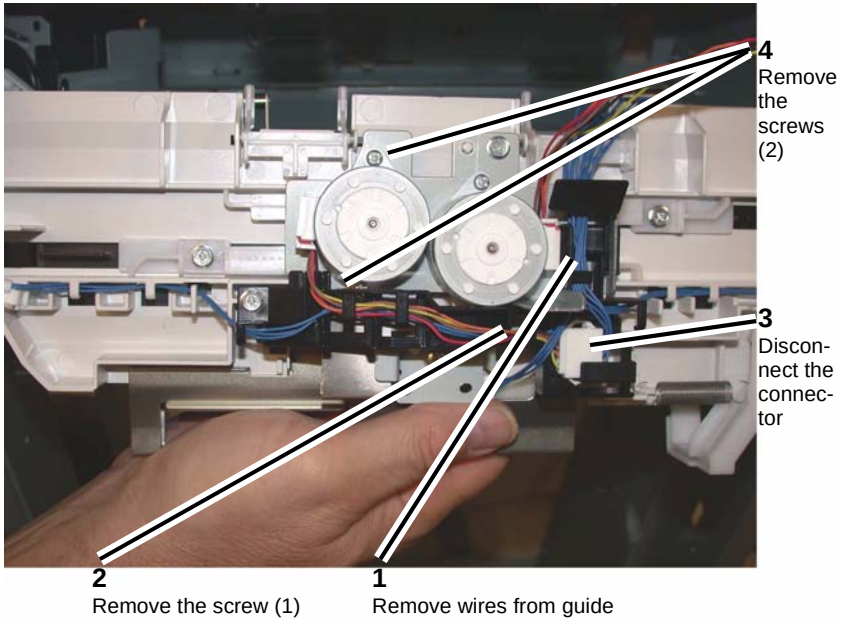

Figure 1 Removing the Tamper Motor

Replacement

Replace in reverse order of removal.

REP 23.27 (LX) Front/Rear Tamper Home Sensors

Parts List on PL 23.12

Removal

NOTE: *When turning the power OFF, turn the Power Switch OFF first, and then the Main Power Switch.*

1. Press the **Job Status** button to check that there are no jobs in progress.
2. Switch off the power and disconnect the power cord.
3. Remove the Compiler Tray Assembly (REP 23.17).
4. Turn the Compiler Tray over on a work surface (Figure 1).
5. Disconnect the connector.
6. Remove the Front or Rear Tamper Home Sensor (PL 23.12).

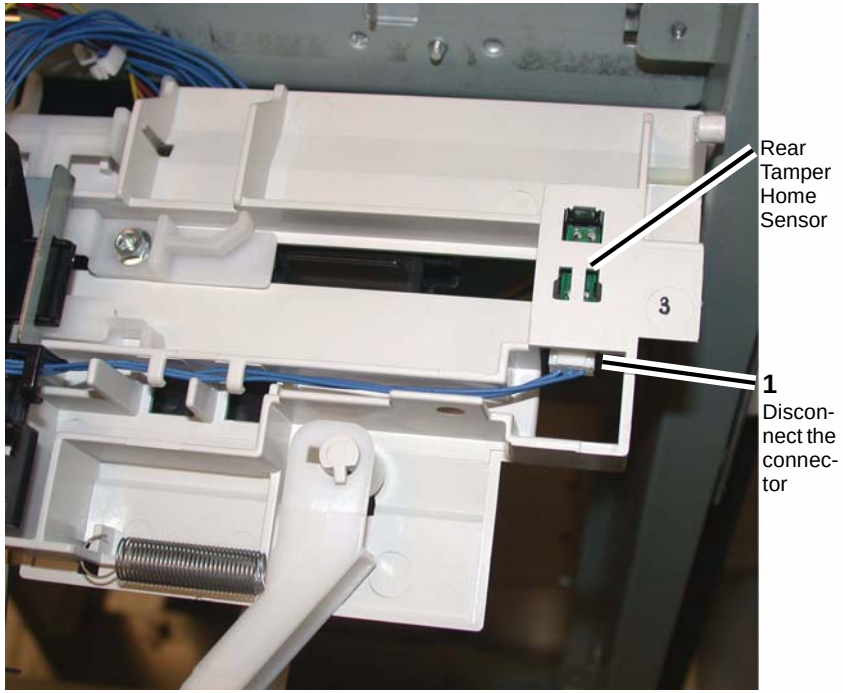

Figure 1 Removing the Front or Rear Tamper Home Sensor

REP 23.28 (LX) Compiler No Paper Sensor

Parts List on PL 23.12

Removal

NOTE: *When turning the power OFF, turn the Power Switch OFF first, and then the Main Power Switch.*

1. Press the **Job Status** button to check that there are no jobs in progress.
2. Switch off the power and disconnect the power cord.
3. Remove the Compiler Tray Assembly (REP 23.17).
4. Turn the Compiler tray over on a work surface.
5. Remove the screw (1) that secures the bracket (PL 23.12) (Figure 1).

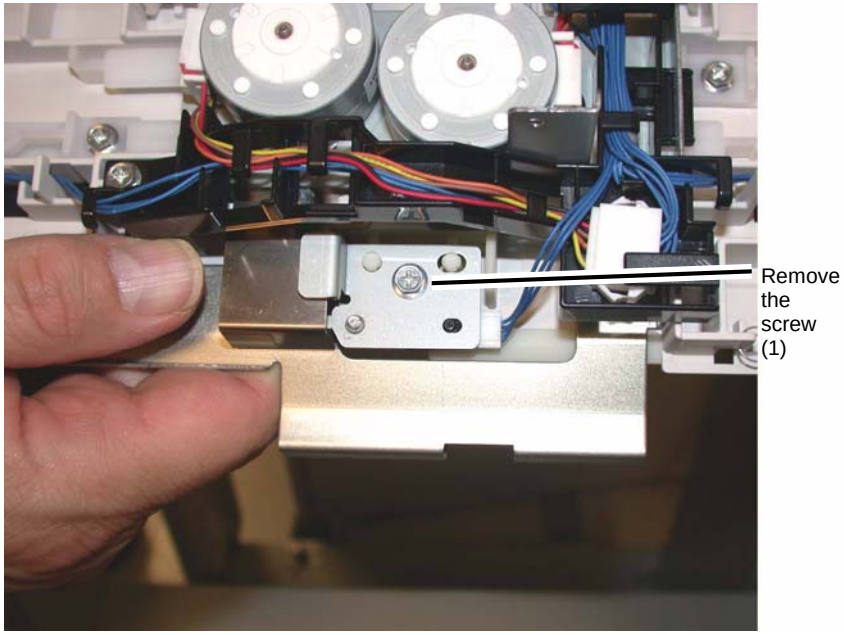

Figure 1 Removing the Bracket

6. Disconnect the connector (Figure 2).
7. Remove the screw (1) that secures the sensor.
8. Remove the Compiler No Paper Sensor.

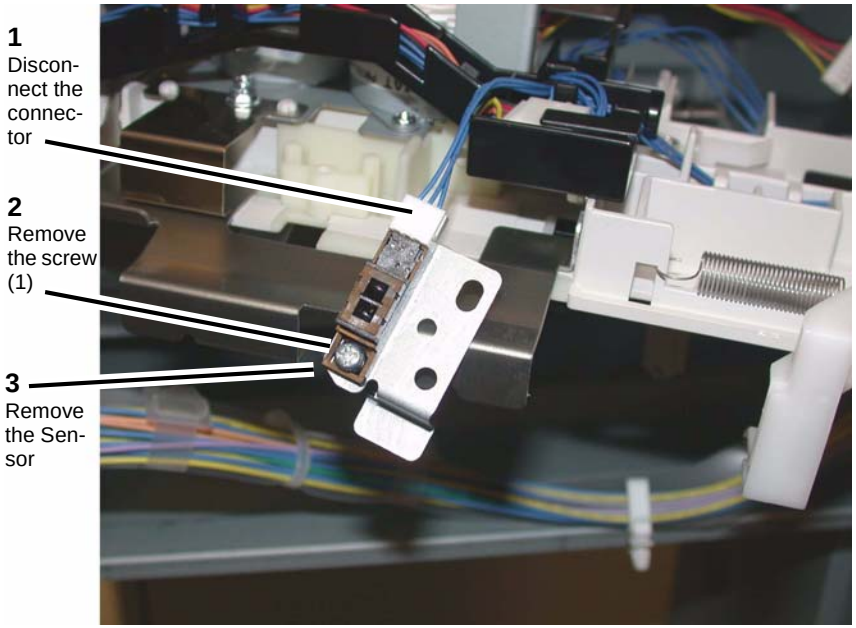

Figure 2 Removing the Compiler No Paper Sensor

REP 23.29 (LX) Front/Rear Carriage Assembly

Parts List on PL 23.7

Removal

NOTE: *When turning the power OFF, turn the Power Switch OFF first, and then the Main Power Switch.*

1. Press the **Job Status** button to check that there are no jobs in progress.

NOTE: *Ensure that the Stacker Tray is in the top position.*

2. Switch off the power and disconnect the power cord.
3. Remove the Finisher Front Cover (REP 23.6).
4. Remove the Rear Upper and Rear Lower Covers (REP 23.7, REP 23.8).
5. Remove the Stacker Tray (REP 23.20).
6. Removing the Carriage Assembly (Figure 1).
   a. Disconnect and remove the Spring.

NOTE: *The Carriage Bearings (2 each Assembly) are not fastened to the shafts. Use care to catch the Bearings when the Carriage Assembly is removed.*

   b. With a 6 inch common screwdriver, move the belt Clamp latch aside and remove the Stacker Belt and Carriage Assembly.

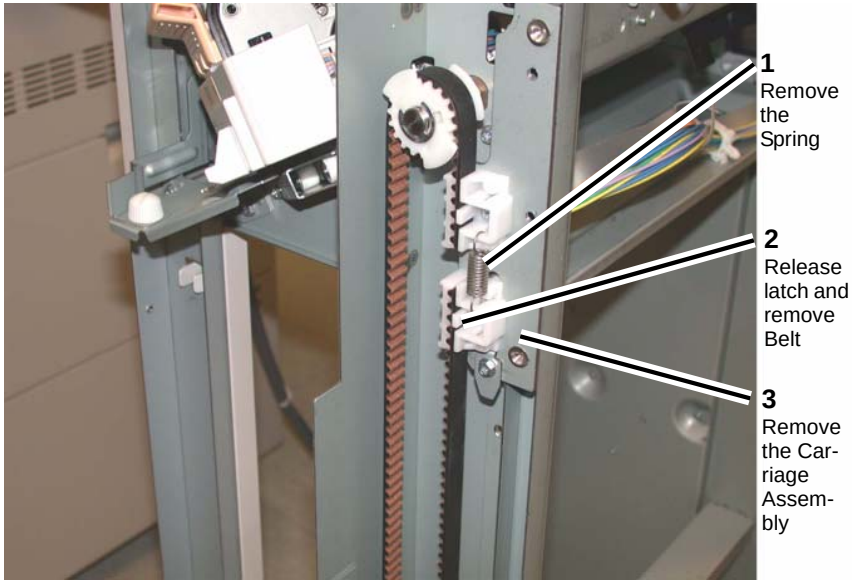

Figure 1 Removing the Carriage Assembly

Replacement

NOTE: *Ensure that the Front and Rear Carriage Assemblies are installed at the same height.*

1. Install the Front or Rear Carriage Assemblies in the reverse order of removal.

REP 23.30 (LX) Booklet PWB

Parts List on PL 23.21

Removal

NOTE: *When turning the power OFF, turn the Power Switch OFF first, and then the Main Power Switch.*

1. Press the **Job Status** button to check that there are no jobs in progress.
2. Switch off the power and disconnect the power cord.
3. Remove the Booklet PWB Cover (REP 23.35).
4. Remove the Booklet PWB (Figure 1).
   a. Disconnect the Connectors (5).
   b. Remove the Screws (4).
   c. Remove the Booklet PWB.

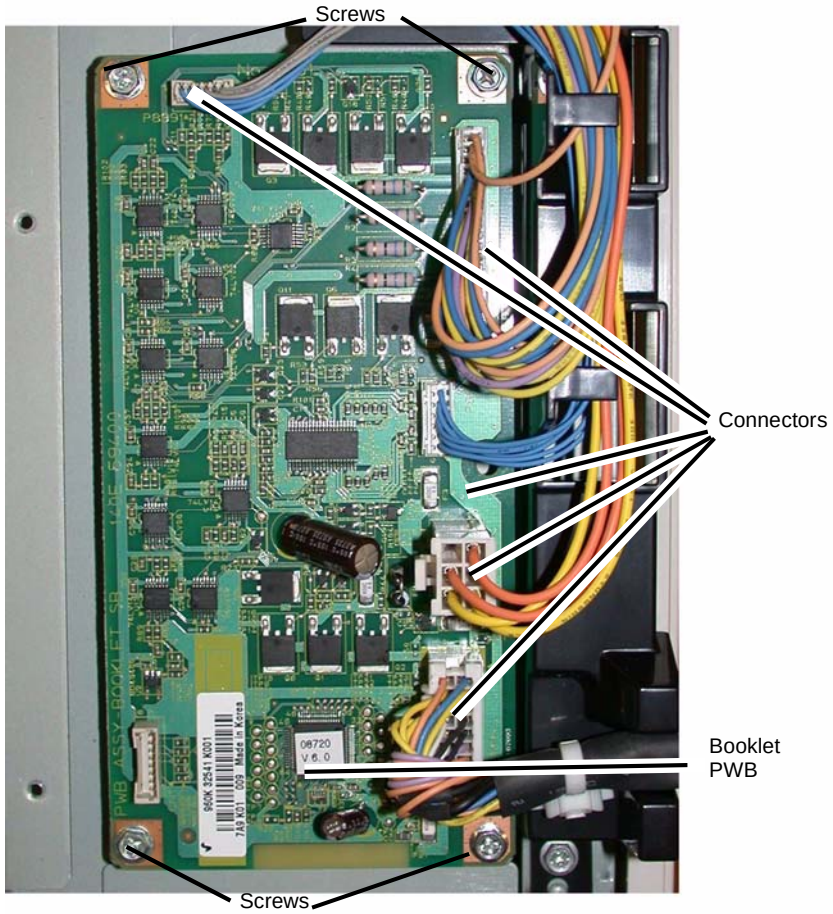

Figure 1 Removing the Booklet PWB

Replacement

1. Reverse the removal procedure for replacement.

REP 23.31 (LX) Booklet Maker Assembly

Parts List on PL 23.6

Removal

NOTE: *When turning the power OFF, turn the Power Switch OFF first, and then the Main Power Switch.*

1. Press the **Job Status** button to check that there are no jobs in progress.
2. Switch off the power and disconnect the power cord.
3. Unlatch the Eject Cover, and move it all the way to the left (Figure 1).
4. Remove the Thumbscrews (2) (Figure 1).

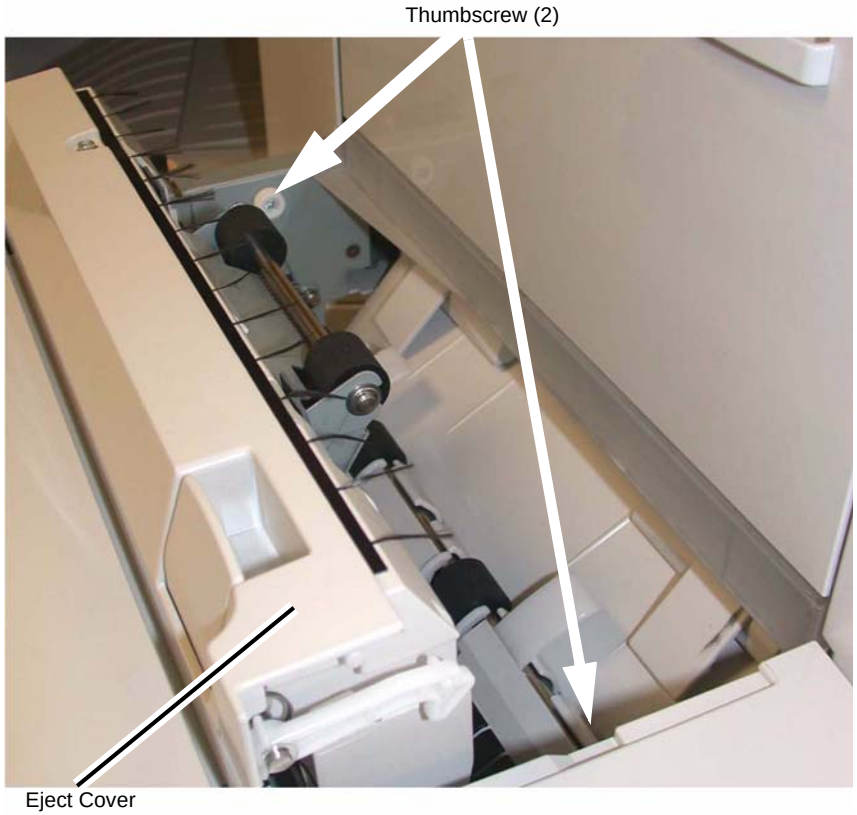

Figure 1 Eject Cover and Thumbscrew

5. Disconnect the Booklet Maker Assembly from the Finisher.
   a. Remove the Connector Cover (Figure 2).

Figure 2 Connector Cover

b. Disconnect the Connector (Figure 3).

c. Pull out the Cable Ties (4).

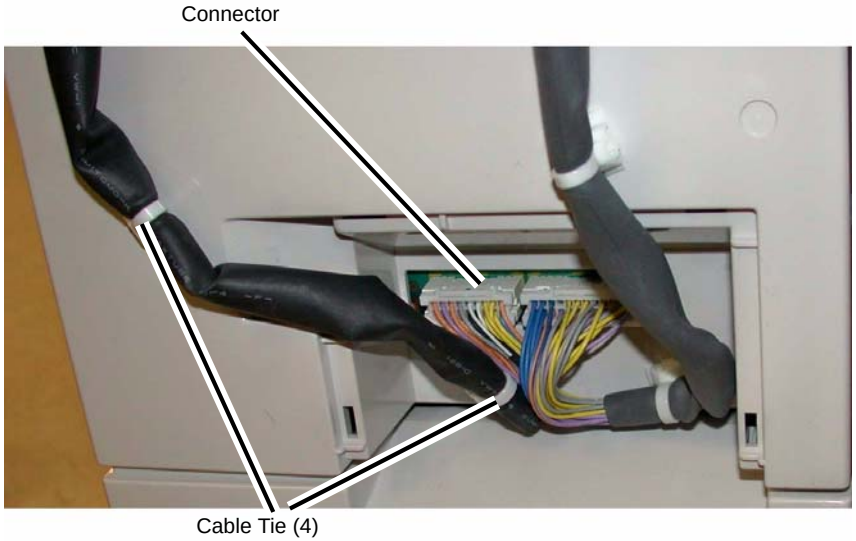

Figure 3 Disconnecting the Booklet Maker Assembly

6. Lift the Booklet Maker Assembly off the Locating Pins (4), and remove (Figure 4).

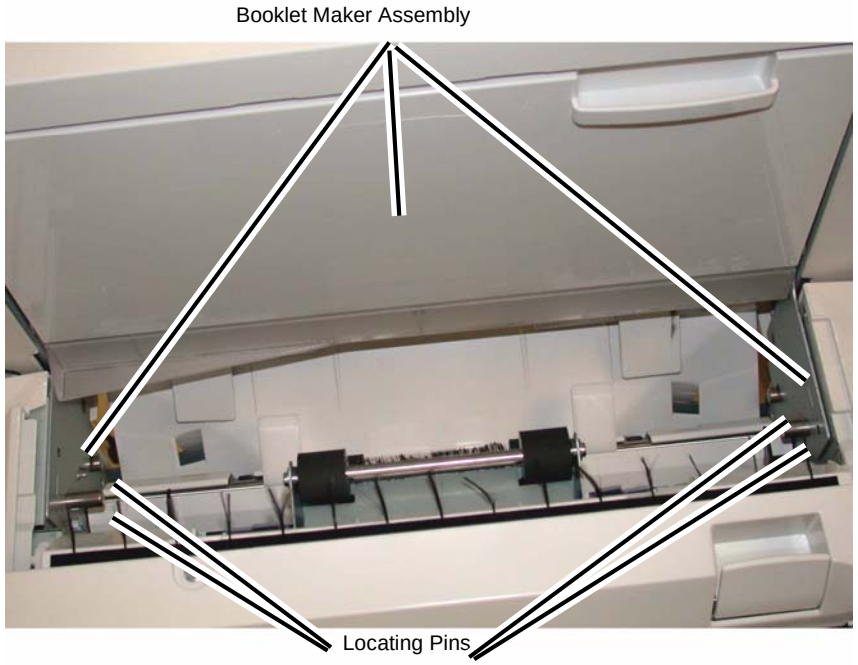

Figure 4 Removing the Booklet Maker Assembly

Replacement

1. Reverse the removal procedure for replacement.

REP 23.32 (LX) Booklet Front Cover

Parts List on PL 23.17

Removal

NOTE: *When turning the power OFF, turn the Power Switch OFF first, and then the Main Power Switch.*

1. Press the **Job Status** button to check that there are no jobs in progress.
2. Switch off the power and disconnect the power cord.
3. Remove the Booklet Maker Assembly from the Finisher (REP 23.31).
4. Remove the Booklet Front Cover.
   a. Remove the Screw (1) (Figure 1).

Figure 1 Removing the Booklet Front Cover

   b. Remove the Screws (2) (Figure 2)
   c. Remove the Booklet Front Cover.

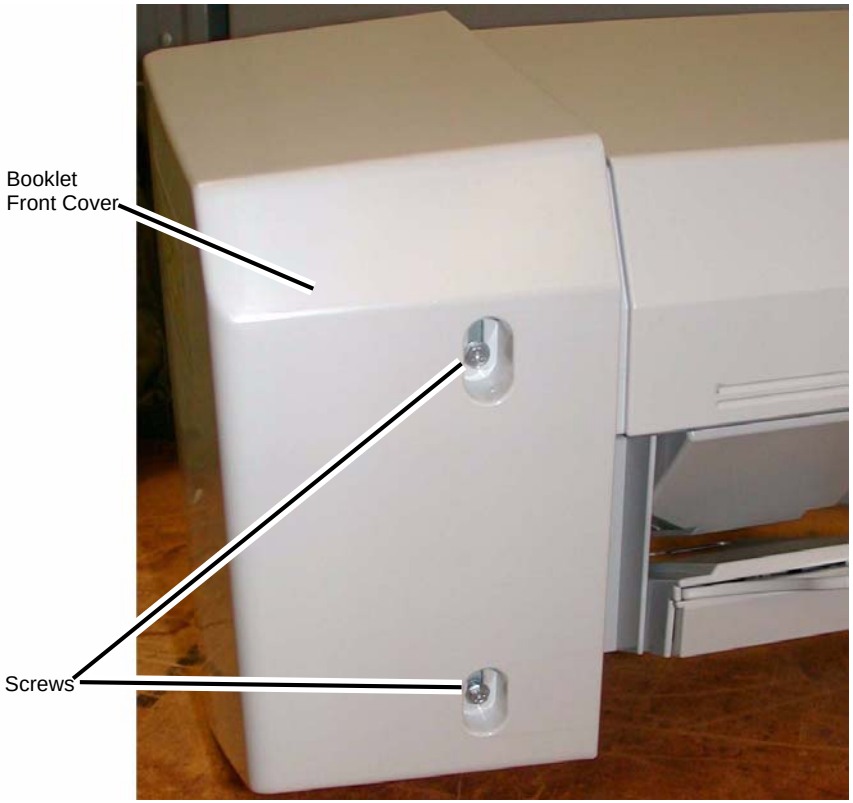

Figure 2 Removing the Booklet Front Cover

Replacement

1. Reverse the removal procedure for replacement.

REP 23.33 (LX) Booklet Rear Cover

Parts List on PL 23.17

Removal

NOTE: *When turning the power OFF, turn the Power Switch OFF first, and then the Main Power Switch.*

1. Press the **Job Status** button to check that there are no jobs in progress.
2. Switch off the power and disconnect the power cord.
3. Remove the Booklet Maker Assembly from the Finisher (REP 23.31).
4. Remove the Booklet PWB Cover (REP 23.35).
5. Remove the Booklet Rear Cover.
   a. Remove the Self-tapping Screws (2) (Figure 1).
   b. Remove the Booklet Side Cover.

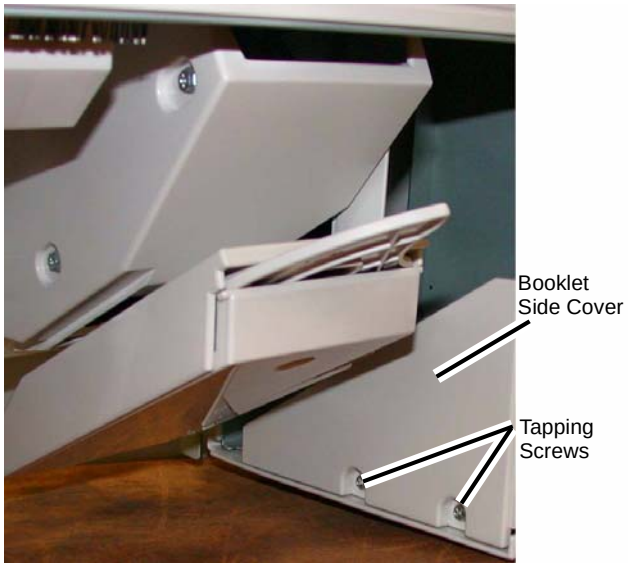

Figure 1 Removing the Booklet Side Cover

   c. Remove the Screw (1) (Figure 2).
   d. Remove the Booklet Rear Cover.

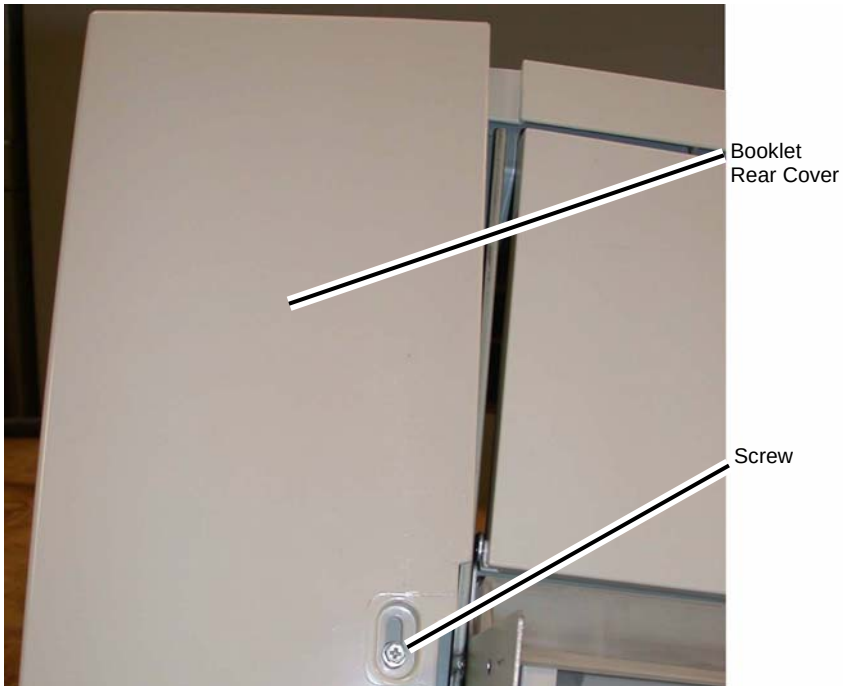

Figure 2 Removing the Booklet Rear Cover

Replacement

1. Reverse the removal procedure for replacement.

REP 23.34 (LX) Booklet Top Cover

Parts List on PL 23.17

Removal

NOTE: *When turning the power OFF, turn the Power Switch OFF first, and then the Main Power Switch.*

1. Press the **Job Status** button to check that there are no jobs in progress.
2. Switch off the power and disconnect the power cord.
3. Remove the Booklet Front Cover (REP 23.32).
4. Remove the Booklet Rear Cover (REP 23.33).
5. Remove the Booklet Top Cover (Figure 1).
   a. Remove the Screws (4).
   b. Remove the Booklet Top Cover.

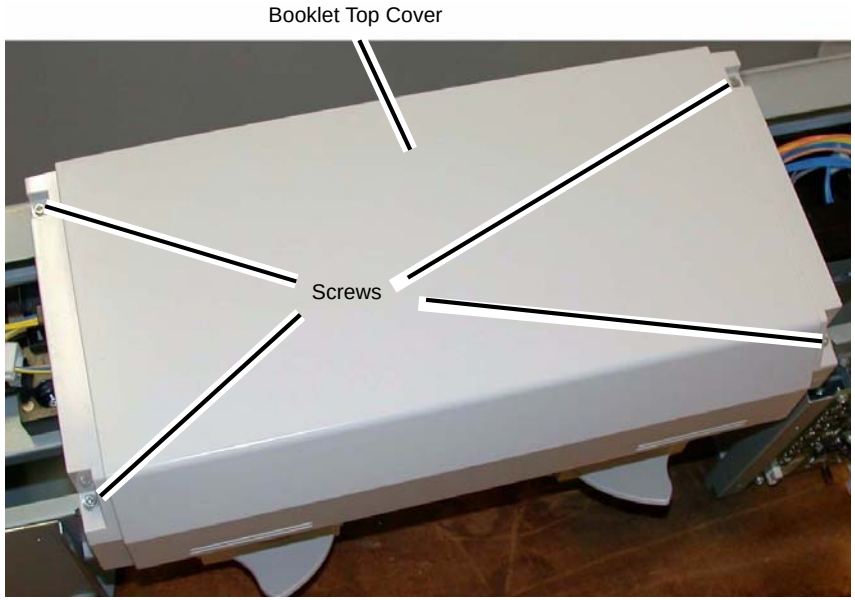

Figure 1 Removing the Booklet Top Cover

Replacement

Reverse the removal procedure for replacement.

REP 23.35 (LX) Booklet PWB Cover

Parts List on PL 23.17

Removal

NOTE: *When turning the power OFF, turn the Power Switch OFF first, and then the Main Power Switch.*

1. Press the **Job Status** button to check that there are no jobs in progress.
2. Switch off the power and disconnect the power cord.
3. Remove the Booklet PWB Cover (Figure 1).
   a. Remove the Self-tapping Screws (2).
   b. Remove the Screws (2).
   c. Remove the Booklet PWB Cover.

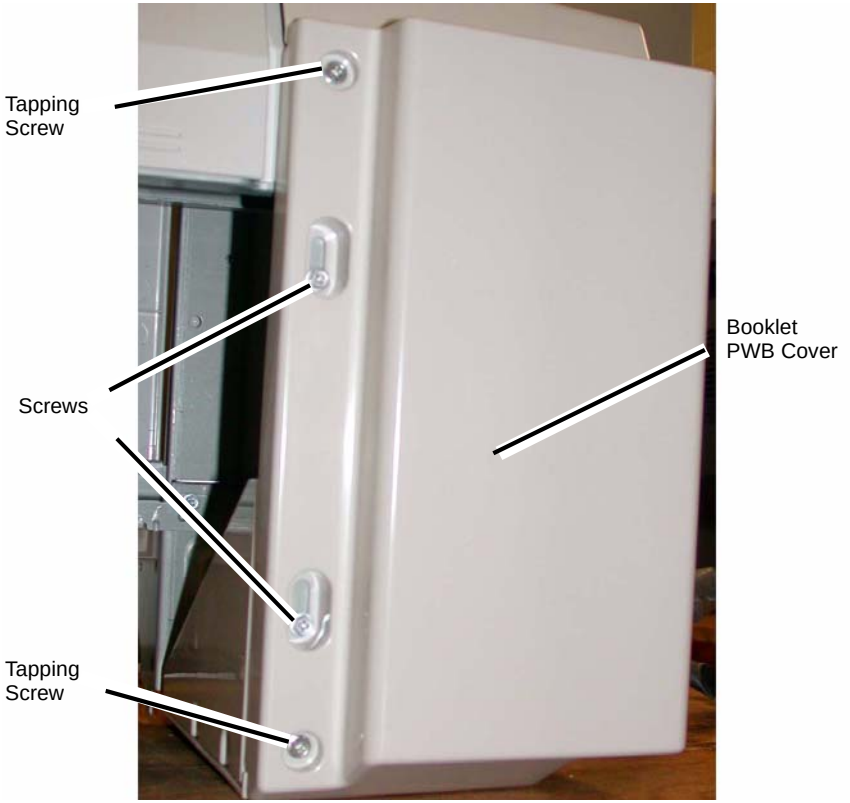

Figure 1 Removing the Booklet PWB Cover

Replacement

Reverse the removal procedure for replacement.

REP 23.36 (LX) Booklet Left Cover

Parts List on PL 23.17

Removal

NOTE: *When turning the power OFF, turn the Power Switch OFF first, and then the Main Power Switch.*

1. Press the **Job Status** button to check that there are no jobs in progress.
2. Switch off the power and disconnect the power cord.
3. Remove the Booklet Maker from the Finisher (REP 23.31).
4. Remove the Booklet Maker Left Cover.
5. Align the slots at the front and rear of the Booklet Maker Left Cover with the flats on the Mounting Pins.
6. Move the Booklet Maker Left Cover by allowing the flats on the Mounting Pins to slide through the slots in the Cover.

Replacement

1. Reverse the removal procedure for replacement.

REP 23.37 (LX) Booklet Front/Rear Stapler

Parts List on PL 23.19 , PL 23.20

Removal

NOTE: *When turning the power OFF, turn the Power Switch OFF first, and then the Main Power Switch.*

1. Press the **Job Status** button to check that there are no jobs in progress.
2. Switch off the power and disconnect the power cord.
3. Remove the Booklet Maker Assembly from the Finisher (REP 23.31).
4. Remove the Stapler Guide (Figure 1).
   a. Remove the Screw (1).
   b. Remove the Stapler Guide.

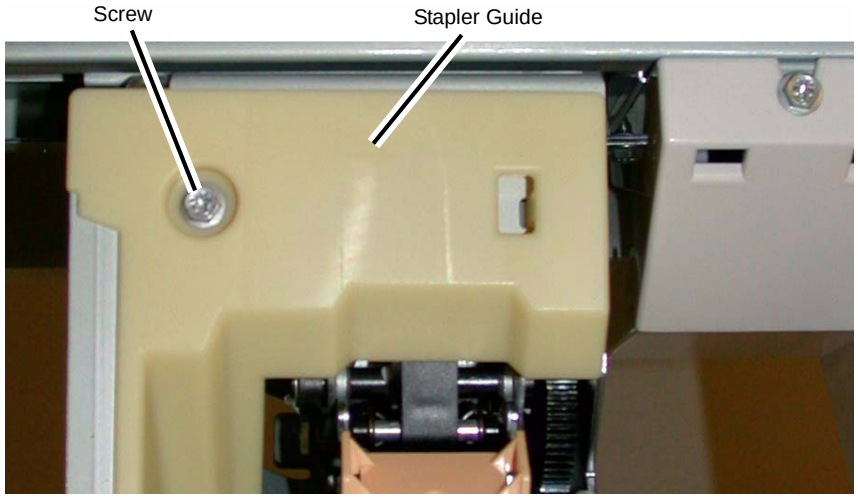

Figure 1 Removing the Stapler Guide

5. Remove the Stapler Lower Cover (Figure 2).
   a. Remove the Screw (1).
   b. Remove the Stapler Lower Cover.

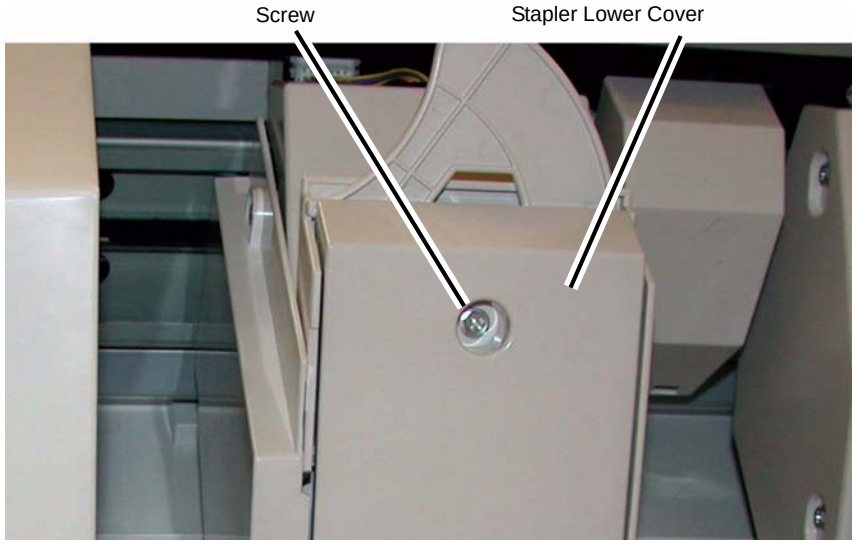

Figure 2 Removing the Stapler Lower Cover

6. Remove the Chute (Figure 3).
   a. Remove the Screw (1).
   b. Remove the Chute.
7. Remove the Stapler Rear Cover (Figure 3).
   a. Remove the Screws (2).
   b. Remove the Stapler Rear Cover.

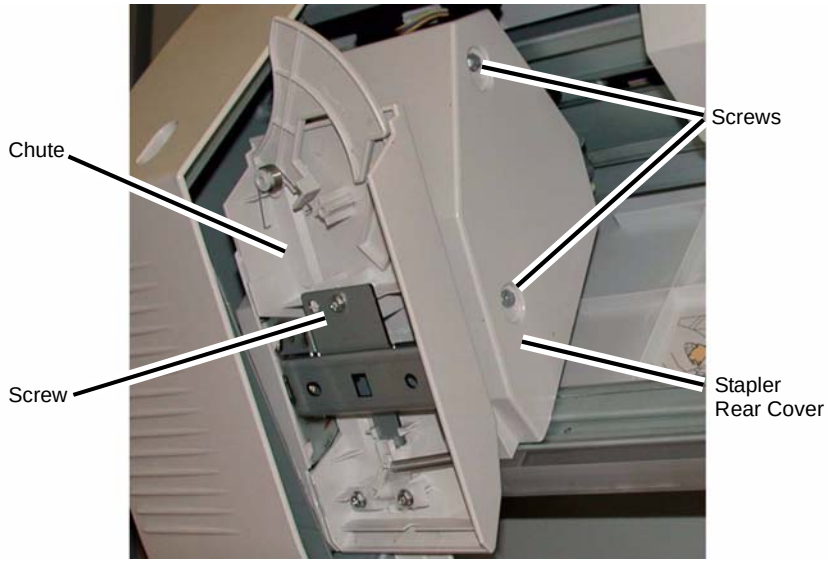

Figure 3 Removing the Chute and Stapler Rear Cover

8. Remove the Stapler (Figure 4).
   a. Release the wires from the Clip.
   b. Disconnect the Connector.
   c. Remove the Screws (3).
   d. Remove the Stapler.

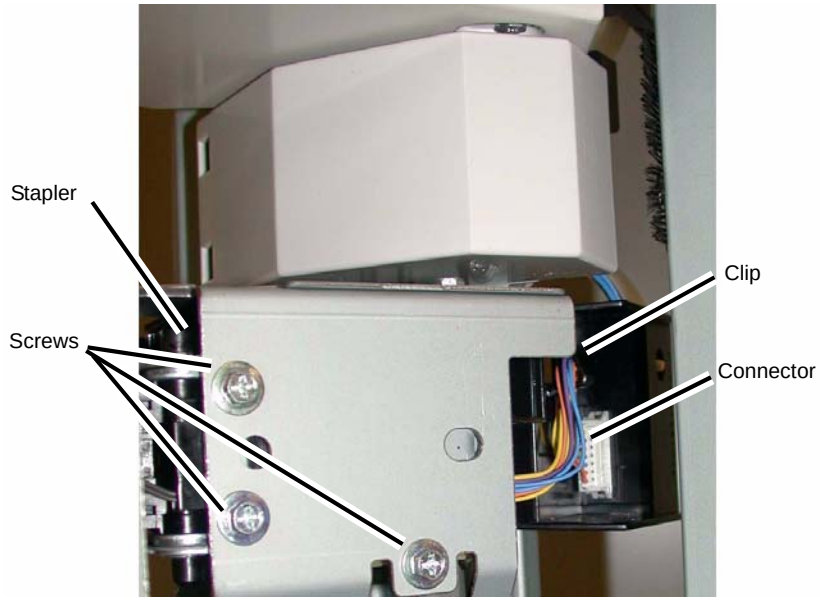

Figure 4 Removing the Stapler

Replacement

1. Reverse the removal procedure for replacement.

REP 23.38 (LX) Booklet Stapler Move Motor

Parts List on PL 23.18

Removal

NOTE: *When turning the power OFF, turn the Power Switch OFF first, and then the Main Power Switch.*

1. Press the **Job Status** button to check that there are no jobs in progress.
2. Switch off the power and disconnect the power cord.
3. Remove the Booklet Maker Assembly from the Finisher (REP 23.31).
4. Remove the Cover for the Booklet Stapler Move Motor (Figure 1).
   a. Remove the Screw (1).
   b. Remove the Cover.

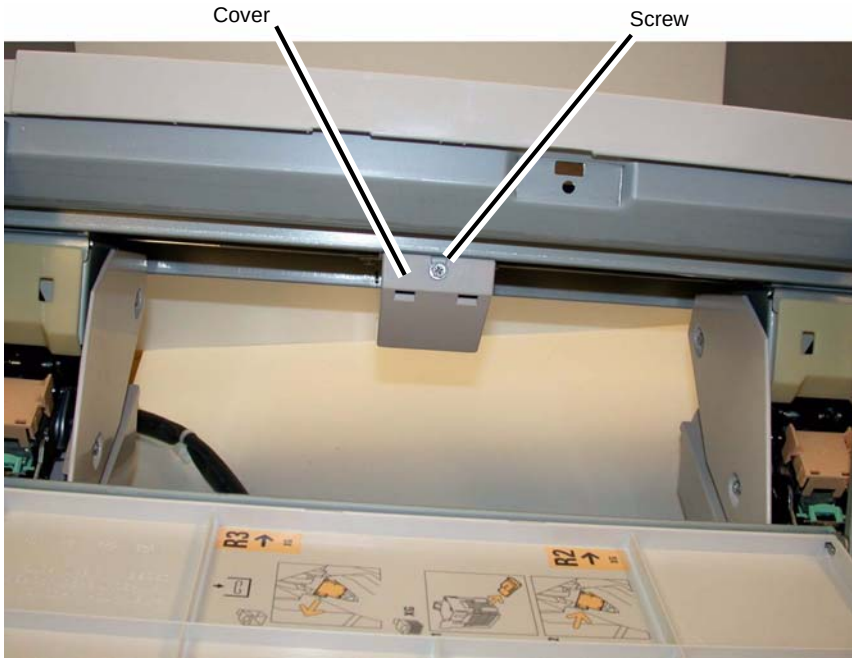

Figure 1 Removing the Cover

5. Remove the Booklet Stapler Move Motor (Figure 2).
   a. Open the Clip and release the wires.
   b. Disconnect the Connector.
   c. Remove the Screws (3).
   d. Remove the Booklet Stapler Move Motor.

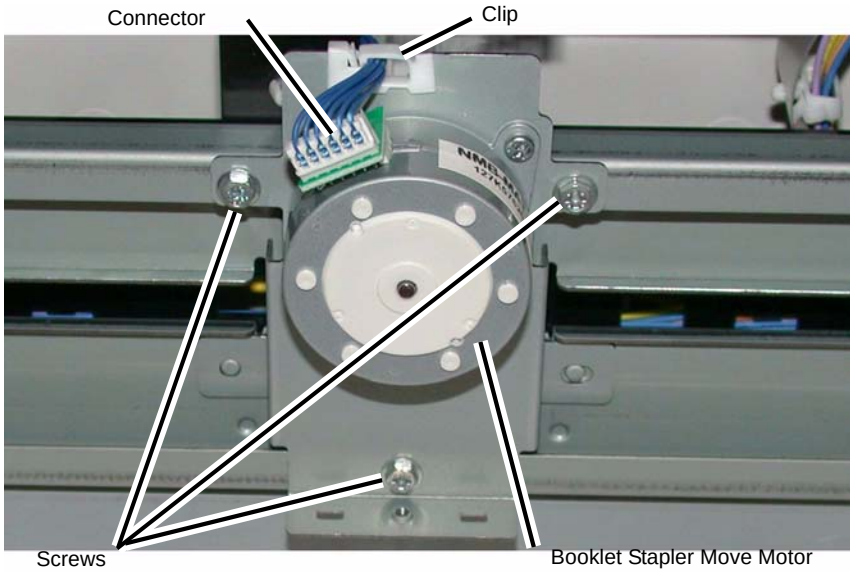

Figure 2 Removing the Booklet Stapler Move Motor

Replacement

1. Reverse the removal procedure for replacement.

ADJ 4.1 UI Diagnostic Tests

Purpose

This series of tests are built into the UI software to test the functionality of the UI display, UI pixels and color fidelity, Touch Screen response and Control Panel buttons and LEDs.

Procedure

To display the UI Diagnostic Tests menu, simultaneously press the *****, **#**, and C buttons. The menu displays a list of 6 choices. You can select the tests from either the Touch Screen or by using the number key pad on the Control Panel. Each test will have one or more subtests. These tests are selectable from the number keys on the control panel. You can exit any of the top level tests by pressing the 0 button on the Control panel.

1. **LCD Pixel Test** - This test displays a lighted blank screen. A small square will display wherever you touch the screen. This will demonstrate the function of the touch screen. If your touch does not produce a color square, the touch screen is defective.
2. **Touch Panel Calibration** - Use the Touch Pen for this routine. Start the test and touch the cross hatch locations as they are displayed. This will set the correct points of origin for the display.
3. **Touch Panel Test** - This routine tests the response of the Touch Screen to touch. When the panel is touched a small square is displayed. If a square is touched repeatedly it will toggle on and off.
4. **Button Test** - This routine test the functions of the Buttons on the control panel and displays the results on the UI as a color change on the button display.
5. **Display Vertical Test** - This test displays eight different vertical gradient patterns. These patterns are selected with the numeric key pad on the control panel:
   - 1 - Red Gradient
   - 2 - Green Gradient
   - 3 - Blue Gradient
   - 4 - RGB three bar display
   - 5 - 33 Bars RGB
   - 6 - 50 Bars RGB
   - 7 - 100 Bars RGB
   - 8 - 200 Bars RGB
   - 0 - Exit routine
6. **LED Test** - This routine tests the functionality of the LEDs on the Control panel. Select the test to perform and press the buttons on the control panel that have LEDs associated with them; the display on the UI will indicate which button was detected, and the LED will light. There is also a test that causes the LEDS to blink in a pattern after the LEDs have been switched on.

Select 0 to exit the procedure.

ADJ 5.1 DADF Lead-Skew Adjustment

Parts List on PL 51.1

Purpose

To correct the feeding of the original by adjusting the position of the DADF. (DADF Lead-Skew, Perpendicularity)

Check

1. Place the Test Chart 82E8220 on the Platen Glass.
2. Place 11x17” paper in Tray 1.
3. Make a copy using the following settings in Copy mode.
   a. On the UI Ready to Copy Screen, select the Copy tab.
   b. Under Output Color select Black.
   c. Under the Paper Supply select 11x17” paper size.
   d. Under 2 Sided Copying select 1 Sided.
   e. Reduce / Enlarge should be set to 100%.
   f. On the UI Ready to Copy Screen, select the Layout Adjustment tab, Image Shift should be Side 1 No Shift. Select Save if necessary.

   NOTE: *The copy made from the Platen Glass will be used as the original in the DADF.*

4. Place the copy made from the Platen Glass into the DADF and make 3 copies.
5. Check that the difference in the distance between the side and the Edges at the 100mm mark and the 300mm mark in the 3 copies is within 00.5mm. (Figure 1)

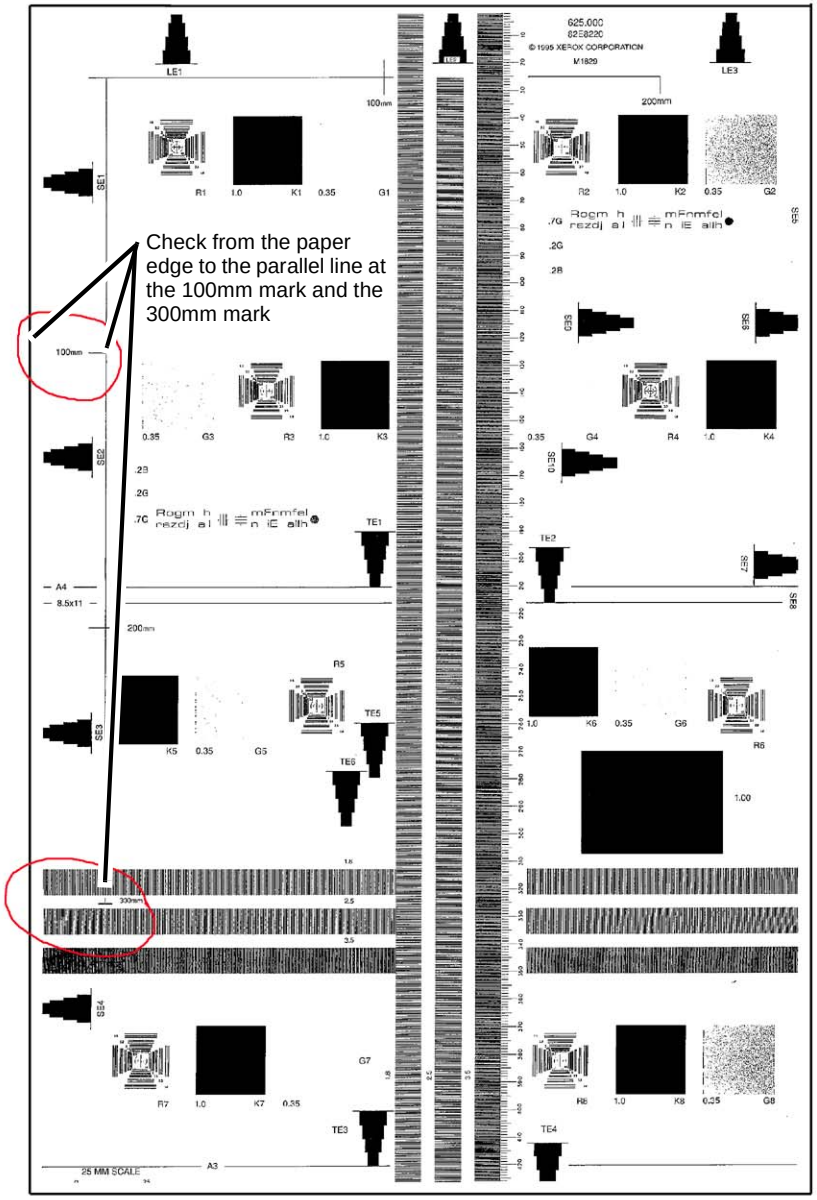

Figure 1 Checking the Skew

6. If the value is not within the specified range, perform the Adjustment:

Adjustment

1. Remove the DADF Rear Cover. (REP 5.4)
2. Adjust the position of the DADF by moving the DADF in direction A or B. (Figure 2)
   a. Loosen the screws (x3).
   b. Move the DADF in direction A or B.
   c. Tighten the screws (x3).

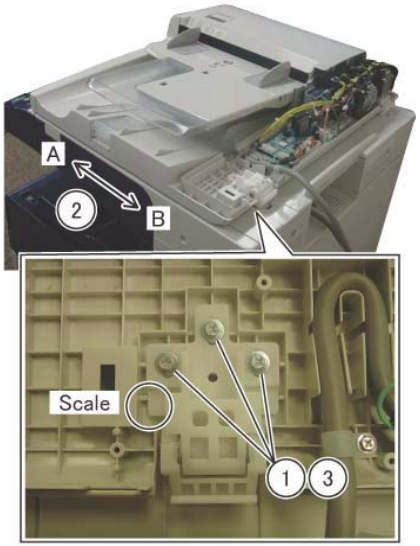

j0ki45105

Figure 2 Skew Adjust

- The DADF moved in direction A. (Figure 3)

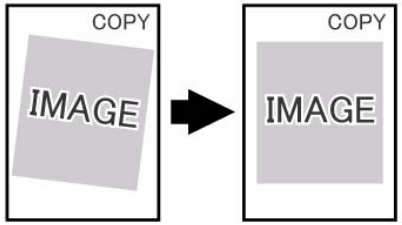

j0ku42044

Figure 3 Direction A correction

- The DADF moved in direction B. (Figure 4)

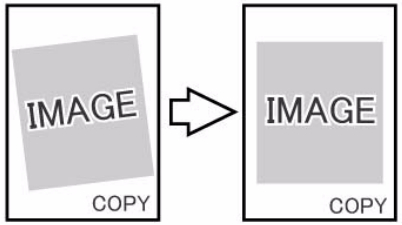

j0ku42043

Figure 4 Direction B correction

3. Reinstall the DADF Rear Cover.
4. After adjustment, perform DADF Side Registration (ADJ 5.2) and DADF Lead Edge Registration. (ADJ 5.4).

ADJ 5.2 DADF Side Registration

Parts List on PL 51.1

Purpose

To adjust the original to the proper position (drum shaft direction) on the Platen.

NOTE: *The following adjustments must be made before carrying out checking and adjustment.*

- *IOT Side Registration (ADJ 9.1)*
- *IIT Lead Edge Registration (ADJ 6.2)*
- *IIT Side Edge Registration (ADJ 6.3)*
- *DADF Lead-Skew Adjustment (ADJ 5.1)*

NOTE: *DADF Side Registration is adjusted using the NVM for every paper width.*

Check

Create a test pattern

1. To create a Cross Line Test Pattern, use a plain white sheet of 8.5x11”/A4 paper and fold the sheet precisely in half lengthwise and width wise. Then with a straight edge draw a straight line in the lengthwise crease and a straight line in the width wise crease.

   Label the top for orientation purposes. (Figure 1)

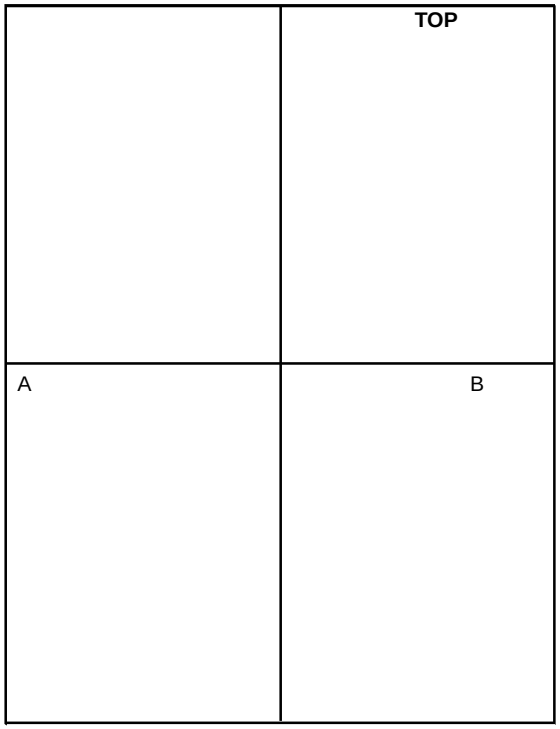

Figure 1 Creating a Test Pattern Original

DADF Side Edge Registration Check - Side 1

1. Load Tray 1 with 8.5x11”/A4 paper.
2. Place the new Cross Line Test Pattern on the DADF with the word TOP **Face Up** and towards the rear of the DADF.
3. Select the following:
   - Tray 1
   - 1-1 Sided.
   - 100%
   - 1 copy
4. Make one copy to the center tray.
5. Remove the copy from the center tray and **Flip the copy left to right.**
6. Fold the copy in half parallel to the short edge (A to B in Figure 1).
7. Check that the fold line is within 2.0mm from the reference line. If the value is not within the specified range, perform the Adjustment. If the Check is OK, perform the DADF Side Edge Registration Check - Side 2.

DADF Side Edge Registration Check - Side 2

1. Place the Cross Line Test Pattern on the DADF with the word TOP **Face Down** and towards the rear of the DADF.
2. Select the following:
   - Tray 1
   - 2-2 Sided.
   - 100%
   - 1 copy
3. Make one copy to the center tray.
4. Remove the copy from the center tray, but **DO NOT FLIP** the copy this time.
5. Fold the copy in half parallel to the short edge (A to B in Figure 1).
6. Check that the fold line is within 2.0mm from the reference line.

NOTE: *Side 2 Registration should track Side 1 closely. In the event that it does not, perform the adjustment, and attempt to equalize the registration for both sides.*

Adjustment

NOTE: *The following adjustment uses the same NVM code (715-110) for both Side 1 and Side 2 registration.*

1. Based on the results of the check(s), adjust for the worst-case misregistration, Side 1 or Side 2.
   a. Enter UI Diagnostic (CSE) Mode. Select the Adjustments tab.
   b. Select dC131 NVM Read/Write.
   c. Change the value in location 715-110 to perform the correction (all sizes).
   d. Increase the value to move the image toward "TOP." Each step represents 0.1% change (0.0847mm per step).
   e. Repeat Check and Adjustment until the measurement is within the specified range.
2. Repeat the check for the other side and adjust the value in NVM 715-110 to try to equalize the registration for both sides.

ADJ 5.4 DADF Lead Edge Registration

Parts List on PL 1.4

Purpose

To adjust the original to the proper position (original feed direction) on the Platen.

NOTE: *The following adjustments must be made before carrying out checking and adjustment.*

- *IOT Lead Edge/Side Edge Registration (ADJ 9.1)*
- *IIT Lead Edge Registration (ADJ 6.2)*
- *IIT Side Edge Registration (ADJ 6.3)*
- *DADF Lead-Skew Adjustment (ADJ 5.1)*

Check

1. Place the 82E8220 Test Pattern on the Document glass with the trade mark and part number as the lead edge.
2. Set up the machine to make two sided copies of the test pattern as follows:
   a. On the UI Ready to Copy Screen, select the Copy tab.
   b. Under Output Color select Black.
   c. Under the Paper Supply select 11x17” paper size.
   d. Under 2 Sided Copying select 1 to 2 Sided.
   e. Reduce / Enlarge should be set to 100%.
   f. On the UI Ready to Copy Screen, select the Layout Adjustment tab, Image Shift should be Side 1 and Side 2 No Shift. Select Save.
3. Select a Quantity of 5.
4. Press the **Start** button to make a copy of side 1.
5. After side 1 is made, place a small piece of paper with the words side 2 written on it, onto the Document Glass and under the 82E8220 Test Pattern. (Figure 1)

   NOTE: *Side 2 can now be identified by the word “side 2” copied from the small piece of paper placed on the Document Glass under the test pattern from previous step.*

6. Press the **Start** button to make a copy of side 2.

   NOTE: *The 2 sided copies will be used to run duplex sets for measurement through the DADF.*

7. Place the 2 sided copies into the DADF and make one set of 2 sided copies.
8. On side 1 and side 2, measure on the scale from the 10 mm line to the edge of the paper. The measurement should as follows. (Table 1)

   If the value is not within the specified range, perform the Adjustment:

Table 1 Specification

Item	Simplex	Duplex
Lead Edge	10 ± 0.5mm	10 ± 0.5mm

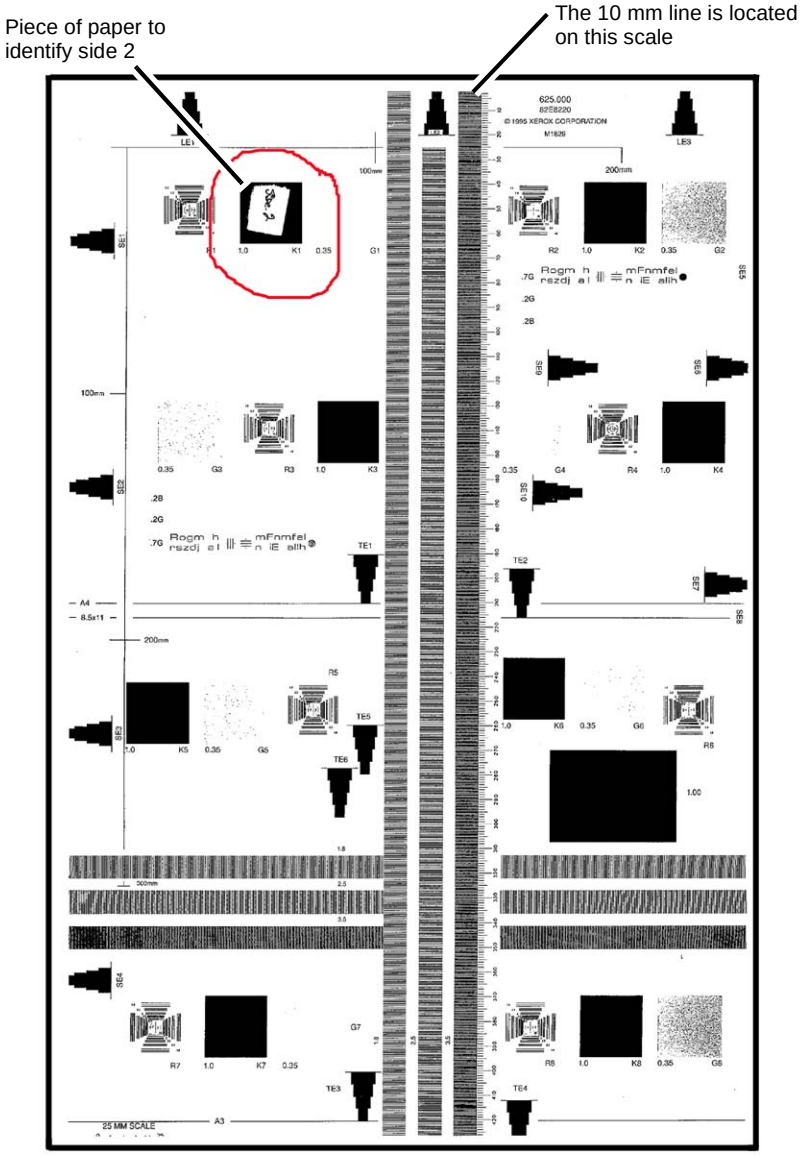

Figure 1 Identifying side 2

9. If the value is not within the specified range, perform the Adjustment:

Adjustment

1. Enter the Diagnostic mode (Accessing UI Diagnostics.).
2. Select NVM Read/Write.
3. Adjust the Lead Edge using the NVM locations specified in Table 2 until the measured value falls within specifications.
   - each bit equals approximately 0.06 mm
   - increasing the value moves the image toward the Lead Edge

Table 2 NVM List

Chain Link	Name	Min.	Initial	Max
711-140	DADF Lead Reg. Adjustment (Side 1) Replace All	80	129	230
711-141	DADF Lead Reg. Adjustment (Side 2) Replace All	80	129	230

4. Repeat Check and Adjustment until the Lead Edge measurement is within the specified range.

ADJ 6.1 Full/Half Rate Carriage Position Adjustment

Parts List on PL 1.6

Purpose

Adjust the position of the Full/Half Rate Carriage.

Adjustment

NOTE: *When turning the power OFF, turn OFF the Power Switch first and then the Main Power Switch.*

NOTE: *Adjust the position of Full/Half Rate Carriage at the front and rear separately. Only the procedures for the rear side is described here. The procedures for the front side is the same as for the rear side.*

1. Press the **Job Status** button to check that there are no jobs in progress.
2. Switch off the power and disconnect the power cord.
3. Open DADF or the Platen Cover.
4. Remove the Platen Glass. (REP 6.2)
5. Remove the Lens Cover Assembly. (PL 1.5)
6. Remove the jig pin from the Lens Assembly. (Figure 1)

   NOTE: *When removing the jig pin, never remove the screws (x4) that secure the Lens Base.*

   a. Remove the screws (x2).
   b. Remove the jig pins (x2).

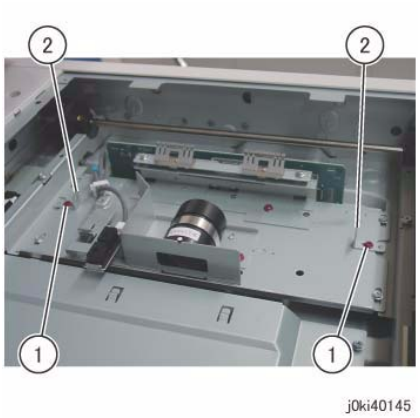

Figure 1 Remove the Jig pins

7. Check that the Pulley at the front side is firmly secured. If the Pulley is loose, tighten the set screws (x2). (Figure 2)

Figure 2 Tighten the front pulley

8. Loosen the set screws (x2) that secure the Pulley at the rear side. (Figure 3)

Figure 3 Loosen the rear Pulley

9. Position the Half Rate Carriage. (Figure 4)
   a. Move the Half Rate Carriage to the jig pin insertion position.
   b. Set the jig pins (x2).

      NOTE: *Make sure the jig pins are aligned as shown in the figure.*

   c. Tighten the screws (x2).

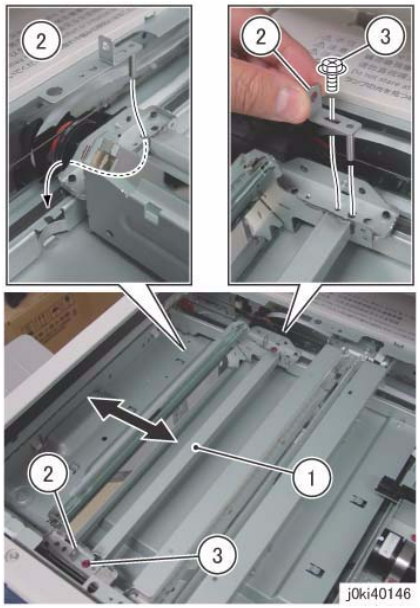

Figure 4 Position the Half Rate Carriage

10. Tighten one of the set screws (x2) (either side) that kept the Pulley at the rear side loose. (Figure 5)

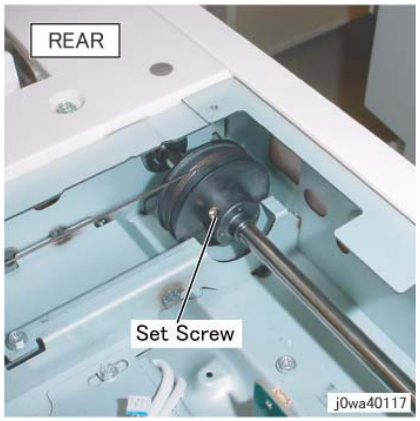

Figure 5 Tighten one of the set screws

11. Secure the cable to the Full Rate Carriage at the rear side. (Figure 6)
    a. Remove the screw.
    b. Set the Tool Pin that was placed at the rear side of the Half Rate Carriage to the front side of the Full Rate Carriage.
    c. Tighten the screw.
    d. Remove the screw.
    e. Set the Tool Pin that was placed at the front side of the Half Rate Carriage to the rear side of the Full Rate Carriage.
    f. Tighten the screw.
    g. Tighten the affixed screws.

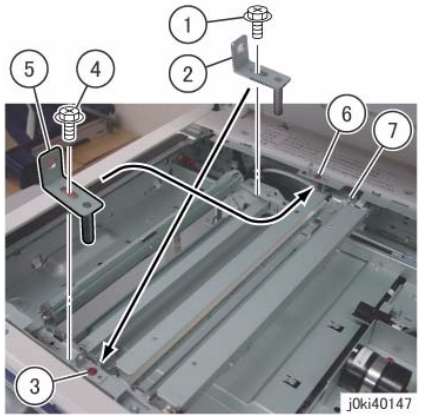

Figure 6 Secure the cable to the Full Rate Carriage

12. Tighten the set screw that kept the Pulley at the rear side loose. (Figure 7)

Figure 7 Tighten the set screw

13. Manually move the Full Rate Carriage to ensure that it moves smoothly.
14. Restore the Tool Pins to their original states.
15. Restore the Lens Cover Assembly to its original state.

ADJ 6.2 IIT Lead Edge Registration

Parts List on PL 1.1

Purpose

To adjust the IIT scan timing in the Slow Scan direction and to correct the copy position.

Check

CAUTION

Perform this adjustment only if absolutely required; the IIT Lead Edge Registration affects the precision of the document size detection.

NOTE: *Before performing this procedure, make sure that the IOT Lead Edge Registration is correct. Refer to ADJ 9.1, IOT Side/Lead Edge Registration.*

1. Place the Geometric Test Pattern (82E8220) on the Platen Glass correctly and make copies with the following settings:
   - Copy Mode: Black
   - Paper Size: 11 x 17 in or A3
   - Magnification: 100%
   - No. of Copies: 2
2. On the 2nd copy, check that the distance from the lead edge to the top of Step 3 on the LE2 scale is 10.0mm +/- 2.1mm (Figure 1).

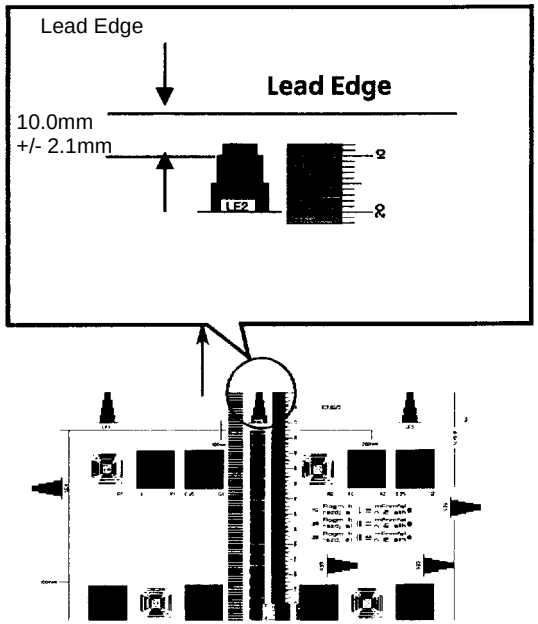

Figure 1 Checking IIT Lead Registration

3. If the value is not within the specified range, Perform the Adjustment:

Adjustment

1. Enter the Diagnostic mode (UI Diagnostic (CSE) Mode).
2. Select dC131 location [715-050].
3. Change the value.
   - 1 increment: 0.029mm
   - Increment of the value: The image moves to the Tail Edge.
   - Decrement of the value: The image moves to the Lead Edge.
4. Repeat Check and Adjustment until the Lead Edge measurement is within the specified range.

ADJ 6.3 IIT Side Registration

Parts List on PL 1.1

Purpose

To adjust the IIT scan timing in the Fast Scan direction and to correct the copy position.

Check

CAUTION

Perform this adjustment only if absolutely required; the IIT Side Edge Registration affects the precision of the document size detection.

NOTE: *Before performing this procedure, make sure that the IOT Side Edge Registration is correct. (Refer to ADJ 9.1, IOT Side/Lead Edge Registration.)*

1. Load 11 x 17 in. or A3 paper into Tray 2.
2. Place the Geometric Test Pattern (82E8220) on the Platen Glass correctly and make copies with the following settings:
   - Copy Mode: Black
   - Paper Tray: Tray 2
   - Magnification: 100%
   - No. of Copies: 2
3. On the 2nd copy, check that the distance from the lead edge to the top of Step 3 on the SE2 and SE3 scales is 10.0mm +/- 1.6mm (Figure 1).

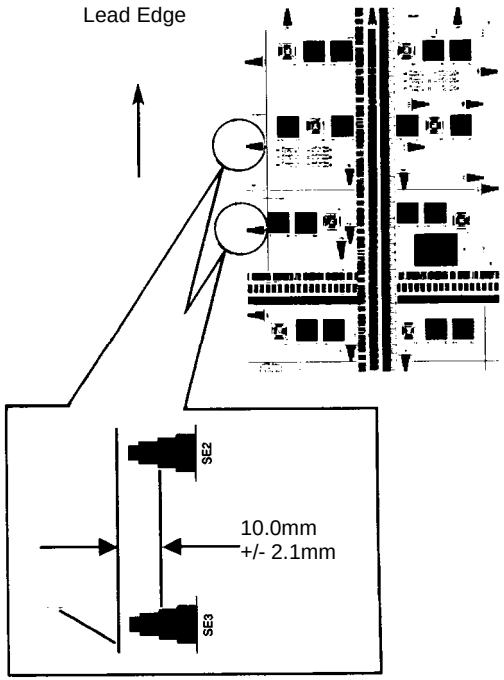

Figure 1 Checking IIT Side Edge Registration

4. If the value is not within the specified range, perform the Adjustment:

Adjustment

1. Enter the Diagnostic mode (UI Diagnostic (CSE) Mode).
2. Enter dC131 location [715-053].
   Change the value.
   - 1 increment = 0.075mm
   - increasing the value = The image moves IN.
   - decreasing the value = The image moves OUT.
3. Repeat Check and Adjustment until the Side Edge measurement is within the specified range.

ADJ 6.5 IIT Calibration

Purpose

The purpose of this procedure is to calibrate the optics in the IIT for optimal performance.

There are two adjustments included in the IIT Calibration Adjustment.

- **White Reference Adjustment** - Calculates and set the White Reference Correction Coefficient.
- **CCD Calibration** - Corrects the IIT sensitivity dispersion.

Adjustment

CAUTION

*Do not select the **Optical Axis Calibration** button unless the Lens Kit was replaced.*

1. If the CCD Lens Assembly (PL 1.5) was replaced, perform ADJ 6.6 first.
2. Clean the Optics:
   a. Switch off the power and allow the Exposure Lamp to cool off.
   b. Using the optical Cleaning Cloth, clean the front and rear of the Document Glass, Document Cover, White Reference Strip, Reflector, and Mirror.
   c. Clean the Exposure Lamp with a clean cloth and Film Remover.
   d. Clean the Lens with Lens and Mirror Cleaner and lint free cloth.
3. Enter the UI Diagnostic (CSE) Mode.
4. Select the **Adjustment** tab.
5. Select **dC131 NVM Read/Write**.
6. Confirm the following NVM Read/Write (dC131) location **715-106 IIT Paper Code** is set to **5** for **XC** (Digital Color Xpressions) or **6** for **XE** (Color Tech+). If NVM location 715-106 is incorrect, change to the correct value.

   NOTE: *If the value displayed is something other than 5, 6, or 0, then the scanner NVM is corrupt and needs to be initialized. Go into UI diagnostics, Adjustment tab. Select NVM Initialization, Copier, Scanner, and initialize.*

7. Exit dC131.
8. Select **dC945 IIT Calibration** from the UI.
9. Select the **White Reference Platen** button.
10. Place 1 sheet of 11 x17/A3 Color Expressions (or equivalent 98 brilliance paper) on the platen.
11. Press **Start**.
12. “IIT Calibration in Process” will appear on the UI screen.
13. When the “IIT Calibration Completed” message appears, select the White Reference DADH button.
14. Place 1 sheet of 11x17/A3 Color Expressions (or equivalent 98 brilliance paper)in the DADF.
15. Press **Start**.
16. “IIT Calibration in Process” will appear on the UI screen.
17. When the “IIT Calibration Completed” message appears, select the CCD/Calibration Button
18. Remove the white paper. Place the Color Test Pattern on the platen, then press **Start**.
19. Select **OK**.
20. The calibration data is displayed in the window.

ADJ 6.6 Optical Axis Correction

Parts List on PL 1.1

Purpose

The purpose of this adjustment is to align the CCD with the lens.

CAUTION

This procedure should only be performed if the Lens Kit is replaced, or if the documentation specifically directs.

Check

1. Install the Platen Glass.

CAUTION

Stray light will adversely affect the check. If there is significant ambient light around the machine (especially fluorescent light), open the platen cover as little as required to start the scan, and/or shroud the machine with a drop cloth, in order to keep as much stray light as possible away from the Lens and CCD.

2. Ensure the document cover or DADF is fully raised and that there is nothing on the platen glass.
3. Enter UI Diagnostics (UI Diagnostic (CSE) Mode). Raise the platen cover. Select **the Adjustments tab**, dC945 IIT Calibration, select the **Optical Axis Correction** and press **Start**.
4. Check the results in the **Optical Axis Set Results** box. If **OK** is displayed in the **Result** box, the check is good. Adjust the IIT Calibration (ADJ 6.5).
5. If the tool displays a red **"X"**, perform the Adjustment.

Adjustment

1. Remove the Platen Glass and the Optics cover.
2. Place an index mark on the barrel of a 5.5mm nut driver. The following figure shows the tool and the adjusting nuts. (Figure 1)

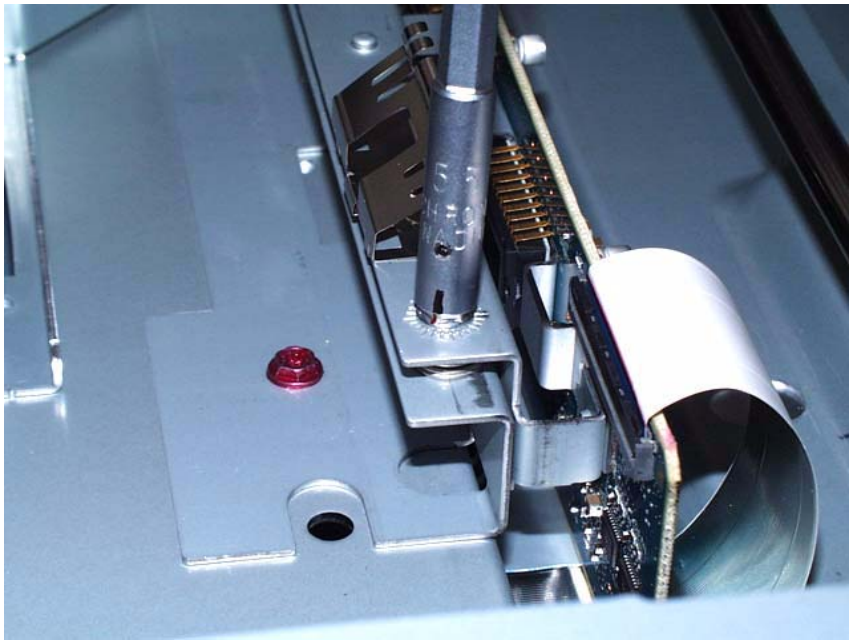

Figure 1 Tool and Front Optics Adjusting Nut

3. Check the results in the **Front Nut Correction Angle** and the **Rear Nut Correction Angle** box. The values displayed indicate the amount and direction of the correction required:
   - + means rotate clockwise
   - - means rotate counterclockwise
   - The amount of correction is displayed in degrees. Each division around the nut represents 15 degrees (divide the displayed value by 15 to get the number of divisions). If a value higher than 990 is displayed, this may indicate that insufficient light is entering the CCD. Make sure that the Lens and Platen Glass are clean.
4. Make the indicated correction for both the front and rear screws,
5. Reinstall the Platen Glass and the Optics cover, then select on **Start** on the screen.
6. Repeat the Check and Adjust until a **Green Check Mark** is displayed.
7. Reinstall the Optics Cover and reinstall the Platen Glass.
8. Check/Adjust the IIT Calibration (ADJ 6.5).

ADJ 7.1 Tray 5 (MSI) Guide Adjustment

Purpose

This procedure calibrates the paper size detection circuits for Tray 5. It should be performed when the MSI size sensor is replaced or a size detection error occurs

Adjustment

1. Enter the UI Diagnostic (CSE) Mode.
2. Select the **Adjustments** tab.
3. Select **dc740 MSI Side Guide Adjustment**.
4. Push the paper guides to their minimum width.
5. Select the **Minimum** button, then select **Read Width**. When the machine software has read the width of the Paper Guides, select **Write Width**. This measurement will then be written into NVM.
6. Push the paper guides to their maximum width.
7. Select the **Maximum** button, then select **Read Width**. When the machine software has read the width of the Paper Guides, select **Write Width**. This measurement will then be written into NVM.
8. Place a sheet of paper in Tray 5 and select **User Defined**, then select **Read Width**. Check to ensure accurate reading of the paper width.

ADJ 9.1 Lead Edge/Side Edge Registration

Purpose

The purpose is to adjust the position of the printed image on the page. This is done by changing the value of the Lead Edge Registration and Side Edge Registration in dC129. This controls where the ROS writes the image.

For the independent IIT Reg Adjustment, refer to dC945 IIT Calibration - Optical Axis Correction. For the IIT/DADF Skew Adjustment, refer to the IIT/DADF Adjustment Procedures, respectively.

Specification

The specifications for Lead Edge and Side Edge are shown in the table below.

Table 1 Specification

Item	Simplex	Duplex	Tray 5 / Bypass
Lead Edge	10±1.5mm	10±1.9mm	10±2.2mm
Side Edge	8.5±2.0mm	8.5±2.4mm	8.5±3.0mm

Introduction

This series consists of the following procedures:

- Lead Edge Registration, Bond/Plain Paper, Trays 1-4 and 6, Sides 1 and 2. One Lead Edge setting applies to all.
- Lead Edge Registration, Bond/Plain Paper, Tray 5 / Bypass, Sides 1 and 2.
- Side Edge Registration, All Trays (1 - 6), Sides 1 and 2, each set separately.

NOTE: *Whenever you adjust registration, you must perform the entire series, in the sequence given. Read the entire procedure before performing the adjustment.*

Lead Edge Registration (Bond/Plain Paper)

Purpose

To correctly register the lead edge of the image in relation to the lead edge of the paper. There is a single Side 1 lead edge setting for Trays 1 - 4 and 6; there is a similar Side 2 lead edge setting for these trays. There are separate lead edge settings for Side 1 and Side 2 of the Tray 5/ Bypass.

Check

Checking Baseline Lead Edge Registration (Side 1)

1. Load Trays 1 and 2, and the Tray 5 / Bypass, with 11 x 17 / A3 Bond/Plain paper. Load Trays 3, 4, and 6 with 8 1/2 x 11 / A4 Bond/Plain paper. If you changed Paper Type or Weight from what was originally installed, make sure that you **Change Description...** on the **Tray Settings** screen. Remember to **Confirm** the changes.
2. The routine automatically selects the appropriate NVM location to set, based on the Paper Type setting for the trays. Ensure that the correct **Size** and **Weight** are displayed in the **Media Type** window.
3. Enter the UI Diagnostic (CSE) Mode.
4. Select the Adjustments tab.
5. Select dC129.
6. Make the following selections:
   a. Select **Side 1**, if not already selected.
   b. Select **Tray 1**, if not already selected.
   c. Select 5 for **Print Count**.
7. Select **Print** on the UI Diagnostics screen.
8. Label each printed sheet with the number of the print (1 through 5), the words “Tray 1,” and “Side 1,” and the location of the Lead Edge of each sheet.
9. Take the third print and measure from the lead edge to point A (as shown on Figure 1). Point A is at the intersection of the 7th line from the side edge and the first line from the lead edge.
10. If the measured value is not 10±1.5mm, perform the Adjustment. If the Check is OK, proceed to **Checking Side 2 Lead Edge Registration**.

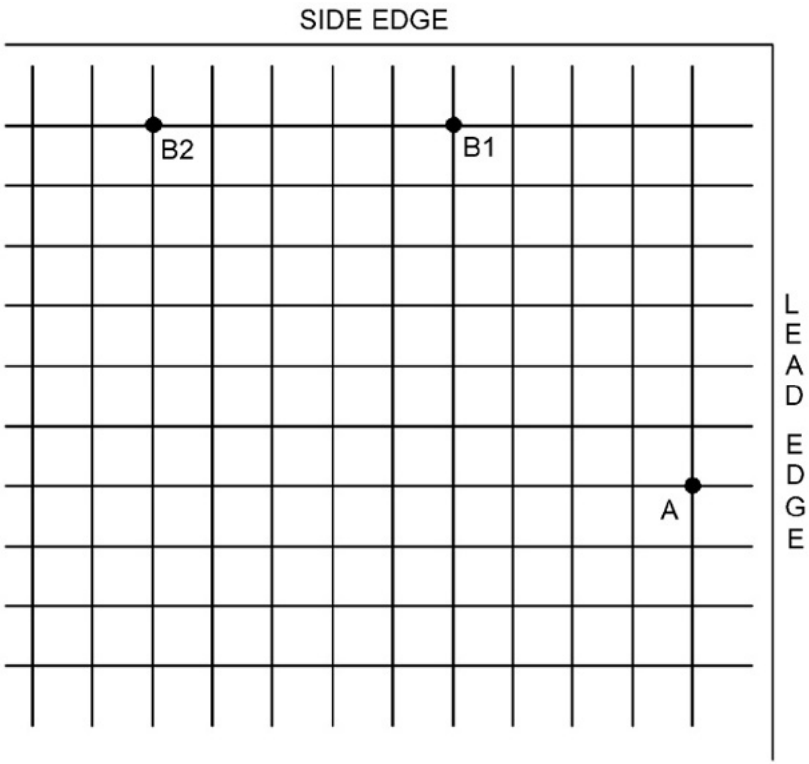

Figure 1 Test Pattern Measurement Points

Checking Side 2 Lead Edge Registration

NOTE: *The grid pattern for side 1 does not align with the side 2 grid pattern; do not attempt to set registration by aligning the grids.*

1. Make the following selections:
   a. Select **Tray 1.**
   b. Select **Side 2**.
   c. Select 5 for **Print Count**, if not already selected.
2. On the UI Diagnostics select Print. (Click **Start** on the PWS screen).
3. Label each printed sheet with the number of the print (1 through 5), the words “Tray 1” and “Side 2,” and the location of the Lead Edge of each sheet.
4. Take the third print and measure from the lead edge to point A (as shown on Figure 1). Point A is at the intersection of the 7th line from the side edge and the first line from the lead edge.
5. If the measured value is not 10±1.9mm, perform the Adjustment. If the Check is OK, proceed to **Checking Tray 5 / Bypass Lead Edge Registration**.

Checking Tray 5 / Bypass Lead Edge Registration

1. Select Tray 5 (MSI) from the **Feeder Tray** drop down menu.
2. Make the following selections:
   a. Select **Side 1**.
   b. Select 5 for **Print Count**, if not already selected.
3. Select **Print**.
4. Take the third print and measure from the lead edge to point A (as shown on Figure 1). Point A is at the intersection of the 7th line from the side edge and the first line from the lead edge.
5. If the measured value is not 10±2.2mm, perform the Adjustment. When the measured value falls within the specification, select the Side 2 radio button and repeat steps 1 through 4 to check registration for Side 2.
6. If the Check for Tray 5 / Bypass Side 2 is not 10±2.2mm, perform the Adjustment. If the Check is OK, proceed to **Side Edge Registration**.

Adjustment

1. Use the Right and Left Arrow buttons to increase or decrease the amount of lead edge spacing. The left arrow increases the lead edge spacing (moves the grid pattern to the left). The right arrow decreases the lead edge spacing (moves the grid pattern to the right). Each increment of the displayed value is .32mm.
2. After adjustment, repeat the Check procedure to see if the measured value of the Lead Edge (A) now falls within the specification of Table 1.
3. Repeat Adjustment steps 1 through 3 until the measured value falls within the specification.

Side Edge Registration

Purpose

To correctly register the side edge of the image in relation to the outboard edge of the paper.

Check

1. Check that paper is loaded in all trays, and that the paper guides are adjusted correctly.
2. Make the following selections:
   a. Select **Side 1**.
   b. Select **Tray 1**.
   c. Select 5 for **Print Count**, if not already selected.
3. On the UI Diagnostics screen select **Print**. (Click **Start** on the PWS screen.)
4. Label each printed sheet with the number of the print (1 through 5), the words “Tray 1,” and “Side 1,” and the location of the Lead Edge and Side Edge of each sheet.

   NOTE: *With the lead edge to the right, the side edge to be checked will be at the top.*

5. Take the third print and measure the following:
   - For paper larger than letter size, measure from the intersection between the 1st line from the side edge and the 10th line from the lead edge of the paper (point B2 on Figure 1).
   - For letter size (8.5 x 11 / A4), measure from the intersection between the 1st line from the side edge and the 5th line from the lead edge of the paper (point B1 on Figure 1).
6. If the measured value is not 8.5±2.0mm, perform the Adjustment.
7. If the measurement is within specification, select Trays 2 through 4, then Tray 6, and repeat steps 1 through 5 for each successive tray. Perform the Adjustment, if the measurement is not within specification.
8. If the measurement is within specification, select the Side 2 radio button, select Trays 1 through 4, then Tray 6, and repeat steps 1 through 5 for each successive tray for Side 2.
9. If the measured value for Trays 2 through 4, and Tray 6 (Side 2) is not 8.5±2.4mm, perform the Adjustment, where applicable.
10. If the measurement is within specification, select Tray 5 and repeat steps 1 through 5 for Side 1 of the Tray 5 / Bypass.
11. If the measured value for Side 1 of the Tray 5 / Bypass is not 8.5±3.0mm, perform the Adjustment.
12. If the measurement is within specification, select the **Side 2** radio button and repeat steps 1 through 5 for Side 2 of the Tray 5 / Bypass.
13. If the measured value for Side 2 of the Tray 5 / Bypass is not 8.5±3.0mm, perform the Adjustment.

Adjustment

1. Use the Up and Down Arrow buttons to increase or decrease the amount of side edge spacing. The Up arrow increases the side edge spacing (moves the image away from the outboard edge of the paper). The Down arrow decreases the side edge spacing (moves the image towards the outboard edge of the paper). Each increment of the displayed value is .35mm.
2. After adjustment, repeat the Check procedure to see if the measured value of the Side Edge (A) now falls within the specifications of Table 1.
3. Repeat Adjustment steps 1 through 3 until the measured value falls within the specification.

ADJ 9.2 Edge Erase Value Adjustment

Purpose

To correct both (Rear/Front) sides and Lead Edge erase values of the image.

NOTE: *.*

Prerequisite

The IOT Lead Edge/Side Edge Registration (ADJ 9.1) must be checked, and adjusted if required.

Check

1. Specify a Tray loaded with paper. Make a black copy without using any originals and leaving the Platen Cover open.
2. Check that the margins are 4mm at the side and 2mm at both Lead and Trail Edges.

Adjustment

1. Enter the UI Diagnostic (CSE) Mode, then select dC131 NVM Read / Write.
2. Adjust the following NVM locations such that the measured value is 4mm at the top, and 2mm at both sides and Trail Edge (Table 1).

   If the setting value is increased, the erase value increases.

Table 1 NVM List

Chain Link	Name	Min.	Initial	Max	Step
749-418	SIDE NORMAL ERASE ADJUST-MENT	40	40	255	0.1mm increments
749-417	TOP NORMAL ERASE ADJUSTMENT	20	20	255	0.1mm increments
749-419	END NORMAL ERASE SIDE Reg ADJUSTMENT	20	20	255	0.1mm increments

3. After adjustment, make another black copy without using any originals and leaving the Platen Cover open.
4. Adjust until the margins are 4mm at both sides and 2mm at both Lead and Trail Edges.

ADJ 9.3 ProCon On/Off Print Check

Purpose

This procedure performs a Minisetup, outputs a printed test pattern for visual analysis, and prints a Job End patch. Selected process control NVM values are displayed, and a check for hidden process-control-related faults is performed.

There are 2 modes in this procedure:

- Procon On mode - the routine is run with ATC/ADC correction per the ProCon lookup table (LUT) and customer mode settings.
- Procon Off mode: - the routine is run with ATC/ADC/LUT bypassed, using the default settings for potential.

Check

1. Ensure that there is 11 x 17 in/A3 paper in Tray 1.
2. Ensure that TRC (ADJ 9.13) and Color Balance values are set at midpoint.
3. Enter the **UI Diagnostic (CSE) Mode**.
4. Select the **Adjustments** tab, then select dC937 Pro Con On/Off Print.

NOTE: *Disregard any NG readings that are displayed when you first enter the routine - the data are only valid after **Print** has been selected.*

5. Select the **Process Control On** button, then select **Print**. Minisetup will be executed in 4 color mode. 1 sheet of the built-in test pattern **Pcon PG 200C** will be printed and the job end patch created.
6. Check the ProCon status screen for any failures. If **Fail** is displayed, perform the Adjustment.
7. Examine the printed test pattern. Compare the output to the Color Test Pattern (Figure 1). Check the density and color shift of the medium/high density areas, and the reproduced density and color shift of the highlights. If a problem is detected, perform the Adjustment.

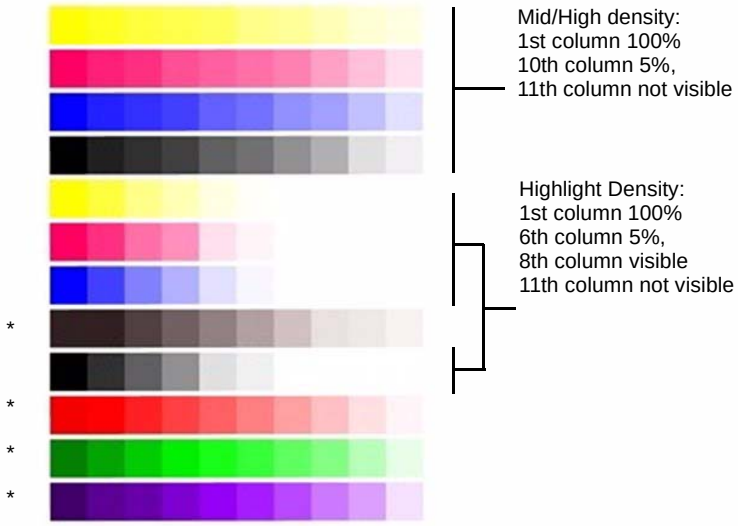

Figure 1 Color Test Pattern

Adjustment

1. If NG is displayed, carry out the following failure correction as appropriate, then repeat the Check.
   - For **ADC Shutter Open** failures go to the 392-649 RAP.
   - For **ADC Shutter Closed** failures go to the 392-650 RAP.
   - For **ADC Sensor** failures go to the 392-651 RAP.
   - For **ADC Patch** failures go to the 392-670 (Y) RAP, 392-671 (M) RAP, 392-672 (C) RAP, or the 392-673 (K) RAP.
   - For **ATC Average** failures go to the 392-653 (Y) RAP, 392-654 (M) RAP, 392-655 (C) RAP, or 392-656 (K) RAP.
   - For **ATC Amplitude** failures go to the 392-657 (Y) RAP, 392-658 (M) RAP, 392-659 (C) RAP, or the 392-660 (K) RAP.
   - For **Temperature** failures go to the 392-661 RAP.
   - For **Humidity** failures go to the 392-662 RAP.
   - For **ADC Minisetup** failures go to the 392-662 (Y) RAP, 392-676 (M) RAP, 392-677 (C) RAP, or the 392-678 (K) RAP.
2. Record the values in the **ProCon On/Off Values** window.
3. Select the **ProCon Off** button, then select **Print**. Minisetup will be executed in 4C mode. 1 sheet of the built-in test pattern **Pcon PG 200C** will be printed and the job end patch created.

   ProCon Off switches off the Grid Voltage Control, and ADC Gradation Control:
   - Grid Voltage Control Off: For medium/high density problems, this allows you to differentiate between developing/transfer problems in IOT elements status and Grid Voltage Control problems due to Procon ADC.
   - ADC Gradation Control: When reproduced highlights are poor, this allows you to differentiate between problems with the IOT itself and problems with the ADC Gradation Adjustment.
4. Compare the output of the ProCon On and ProCon Off prints. Evaluate according to one of the following Problem Statements:
   a. Both ProCon On and ProCon Off prints are unacceptable
      - For poor Highlight reproduction, perform ADJ 9.14 (Tone-up/Tone-down).
      - If the problem involves a single color, it may be the Developer and/or power supplies, Photoreceptor/BCR/Scorotron, and/or power supplies, or ROS. Repair or replace as required.
      - If the problem involves all colors, check the 2nd BTR, its power supply, and the Transfer Belt.
   b. ProCon Off print is OK, but ProCon On print is unacceptable
      - Replace the MOB/ ADC Sensor Assembly (PL 18.5).

ADJ 9.5 Thin Line Correction Mode Adjustment

Purpose

The Thin Line Correction Mode is the mode for correcting the poor reproducibility of 600dpi/1200dpi thin lines.

Because of the dispersion due to the difference in the machines, thin lines, especially slanted ones, tend to break up.

When this happens, use the Thin Line Correction Mode to correct it.

NOTE: *The Thin Line Correction Mode might cause defects to appear in images when in use.*

1. *Interference in the form of banding in ladder images*
2. *LPH streaks appearing in high temperature environment*

Because of these reasons, keep the adjustment amount as low as possible.

Adjustment

1. Enter the UI Diagnostic (CSE) Mode, select dC131 NVM Read / Write, and perform the Thin Line Correction by adjusting the following NVMs.
2. NVM 749-006, 1200 Only Fine Line Correction - 0: OFF (also perform correction for 600dpi), 15: ON (only perform correction for 1200dpi)

   If the Thin Line Correction is also to be performed for 600dpi, use 0. The default value is 15.
3. NVM 749-007, Thin Line Correction Switch - 0: Thin Line Correction OFF, 1: Thin Line Correction ON.

   The default value is 0.
4. Thin Line Correction Amount Adjustment (Table 1):

Table 1 Thin Line Correction

NVM Address	Contents	Initial Value	Adjustment Range
749-243	Thin Line Correction Amount Y Color	200	140~255
749-244	Thin Line Correction Amount M Color	200	140~255
749-245	Thin Line Correction Amount C Color	200	140~255
749-246	Thin Line Correction Amount K Color	200	140~255

   The smaller the value, the more emphasis the thin line gets (amount of exposure is increased).

   Amount of exposure is increased by: 30% for 140, 20% for 160, and 10% for 180. (Default value - Adjustment value)/2 = amount of increased exposure in %.

   The recommended value is 160.
5. 752-006 Thin Line Correction ADC_Switch - 0: OFF, 1: ON.

   Although this is normally set as 0 (OFF) during use, if the highlight reproduction is over-done, set this to 1 (ON).

   Default value is 0.

ADJ 9.6 LPH Exposure Amount Fine Adjustment

Purpose

The LPH Exposure Amount Fine Adjustment is the process of adjusting the LPH exposure amount to correct the uneven density in the Axis Direction that arose due to various causes in the vicinity of the Drum for each YMCK color individually.

The LPH Exposure Amount Adjustment can be performed as negative correction within the range of 0 to -20 (%).

Correction Area

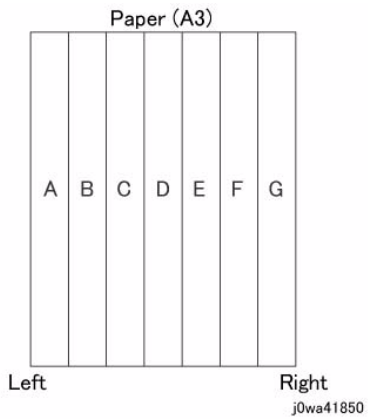

Figure 1 Correction Areas

Table 1 Distance

	A	B	C	D	E	F	G
Distance from the left of image (MM.)	0	52	103	154	206	257	308.9

As shown in Figure 1, the LPH zone is divided into 7 areas by setting the 6 points - from A (left most edge) to G (right most edge).

Adjustment is performed at each area to lower the LPH exposure amount until the density is even.

NOTE: *There are cases where point A or G will lie beyond the image zone. Furthermore, the 154mm mark is the center of the image.*

NOTE: *As an overly large adjustment might cause jumps in gradation, make the adjustments as small as possible.*

The adjustment amount (%) is not = amount of change in density.

The actual exposure level includes a process that converts the brightness of ADC Sensor Position to 100%.

Adjustment

1. LPH Exposure Amount Fine Adjustment ON/OFF Switch Selector

   To enable the LPH Exposure Amount Fine Adjustment function, set the following NVM as ON (Table 2).

Table 2 NVM

NVM Names	NVM Address	Contents	Initial Value	Adjustment Range
Smile Correction Switch	749-005	0: OFF 1: ON	0	0 or 1

2. Selection of Correction Method:

   The LPH Exposure Amount Fine Adjustment can be done by:

   a. Correcting the density skew in the IN-OUT direction

   b. Selecting a pre-prepared pattern to perform the correction

   c. Using custom correction to manually correct the adjustment amount for each area

   A combination of the various correction methods can be used. However, the correction cannot go beyond the 0 to -20 (%) range.

   a. IN/OUT Density Correction (Table 3):

      Corrects the IN-OUT density skew in the axis direction of the photoreceptor.

      When there is density skew from the left to the right of the image, the adjustment amount to correct that has to be set for each color.

      Setting Range is -20 to 20 (%).

Table 3 In/Out Density NVM

NVM Names	NVM Address		Initial Value	Adjustment Range
In Out Tendency (IN/OUT correction)	749-191	Y	0	-20~20
	749-192	M	0	-20~20
	749-193	C	0	-20~20
	749-194	K	0	-20~20

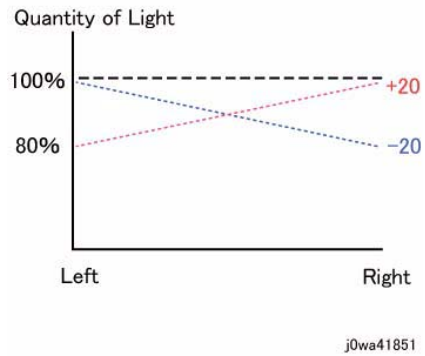

Figure 2 IN/OUT density correction

*Although there is also an adjustment range at the positive side, it only involves reducing the brightness at the IN side or the OUT side and therefore will not have any correction that goes above 100%.

b. Pattern Selection Correction:

   If you have elected to perform correction based on Pattern Selection, select the Pattern 1~6 and Level 1~6 that is most suitable for the density correction from the following figures (Figure 3, Figure 4, Figure 5).

   The selected Pattern (Table 4) and Level (Table 5) are reflected as LPH Brightness Correction by changing the following NVM values.

   As there are separate NVMs for each color, they can each be corrected independently.

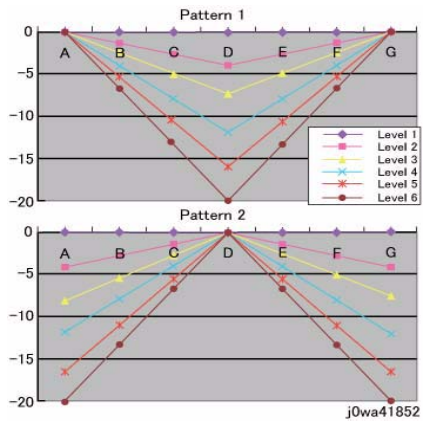

Figure 3 Patterns 1 and 2 selection

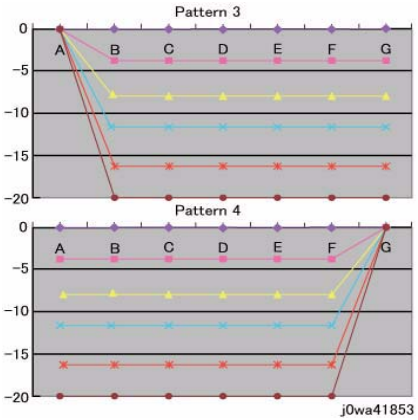

Figure 4 Patterns 3 and 4 selection

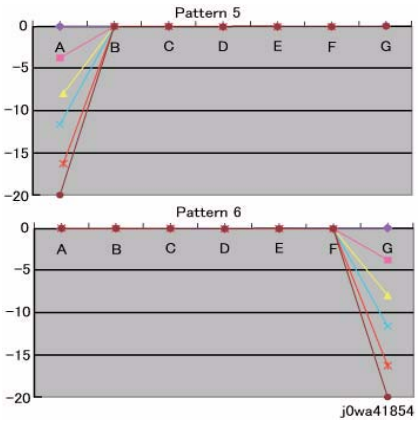

Figure 5 Patterns 5 and 6 selection

Table 4 Correction Pattern NVM

NVM Names	NVM Address		Initial Value	Adjustment Range
Correction Pattern (Pattern Selection)	749-195	Y	1	1~6
	749-196	M	1	1~6
	749-197	C	1	1~6
	749-198	K	1	1~6

Table 5 Correction Level NVM

NVM Names	NVM Address		Initial Value	Adjustment Range
Correction Level	749-235	Y	1	1~6
	749-236	M	1	1~6
	749-237	C	1	1~6
	749-238	K	1	1~6

NOTE: *Take note that "0,5" for Pattern means "Disabled" and "1" for Level means "No correction".*

c. Custom Correction:

If you have elected to perform density correction by custom correction, you must input the required adjustment amount for the correction of every area into the NVM for each YMCK color (Table 6).

Be careful as only negative correction can be performed for density correction.

Table 6 Custom Correction NVM

NVM Names	NVM Address	Contents		Initial Value							Adjustment Range
				A	B	C	D	E	F	G	
Custom Correction Value	749-203~209	R/E (%) within Pulse Width Variable Range	Y	0	0	0	0	0	0	0	-20~20
	749-210~216		M	0	0	0	0	0	0	0	-20~20
	749-217~223		C	0	0	0	0	0	0	0	-20~20
	749-224~230		K	0	0	0	0	0	0	0	-20~20

*The NVM Addresses correspond in ascending order to ABCDEFG.

*Although there is also an adjustment range at the positive side, the brightness will saturate at 100%. The positive correction of up to the 100% range will only be applied when the exposure amount has been corrected towards the negative side at IN-OUT Density Correction or Pattern Selection Correction.

The above 3 types of correction can be used in combination. However, the total amount of exposure adjustment for these Smile Corrections are restricted to be within 0 to -20%.

[Sum of Correction 0~20%] = [IN-OUT Adjustment Amount%] + [Pattern Selection Adjustment Amount %] + [Custom Adjustment Amount %]

If the total from the 3 corrections add up to less than -20%, it will be uniformly limited to -20%.

If it is larger than 0%, then it will be uniformly limited to 0%.

The above are the restrictions that apply to the exposure amount correction and correction by Smile Correction function.

However, within the actual machine, after the exposure amount correction by Smile Correction, it will enter another process to calibrate the exposure at the ADC Sensor Position to be 100%.

As a correction is applied to the exposure amount after a Smile Correction, the exposure amount in the vicinity of 114 to 144mm from the left of the image becomes 100%, while it is relatively higher or lower for the rest of the positions.

Reference sample

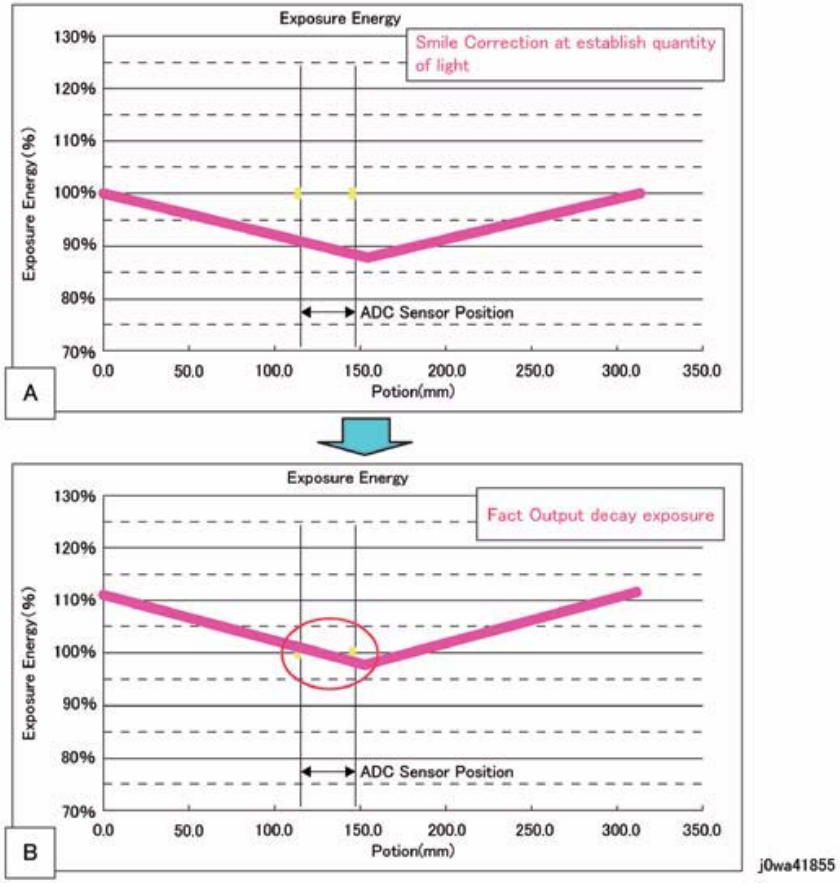

Figure 6 Exposure Energy Measurement

As shown in Figure 6-B, the control is such that the final exposure at the ADC Sensor Position becomes 100%.

By this, the exposure amount that was corrected by Smile Correction (Figure 6-A) is corrected again until it is at the actual output level (Figure 6-B).

(The figures are the exposure models when Pattern 1, Level 4 correction has been performed.)

ADJ 9.7 ATC Sensor Setup

Purpose

CAUTION

*This procedure should only be performed when the ATC Sensor or Developer Housing is being replaced, **OR** when there is reason to believe that the calibration values in NVM are incorrect.*

To set the calibration values **ATC Correction Coefficient**, **ATC Correction Offset** in NVM to calibrate the new ATC Sensor.

Check

1. If an ATC Sensor or Developer Housing was replaced, perform the first procedure listed in **Adjustment**
2. If there is reason to believe that the calibration values in NVM are incorrect, perform the following:
   a. Enter the Diagnostic Mode (UI Diagnostic (CSE) Mode).
   b. From the **Maintenance/Diagnostics** screen, select the **ATC Sensor Setup** button.
   c. Check the values in the bottom 2 rows of numbers in the window. The default values for these rows are:
      - ATC Coefficient - 1024
      - ATC Correction Offset - 0
   d. If the screen displays all default values, perform the second procedure listed in **Adjustment**.

Adjustment

Procedure for new ATC Sensors

Perform these steps if you have just replaced an ATC Sensor or a Developer Housing:

1. Locate the ATC Sensor calibration code on the ATC Sensor. This is the 3-digit number in the 3rd line of text on the label (it will always start with a zero).
2. Enter the Diagnostic Mode.
3. From the **Maintenance/Diagnostics** screen, select the **ATC Sensor Setup** button.
4. Enter the last 2 digits of this code into the appropriate column of the display, using the up/down arrows.
5. Press the **Start** button on the Control Panel.
6. If the Developer Housing was replaced, proceed to ADJ 9.8.

Procedure to restore ATC Calibration values

Perform steps 1 or 2 as appropriate if you need to restore ATC Sensor NVM calibration values:

1. If a known good Machine Settings file exists, use it to restore Machine Settings.
2. If a known good file is not available, if one or more ATC Sensors have been replaced, or if you are not sure of the replacement status, perform the following:
   a. Remove the Developer Housings (REP 9.11).
   b. Locate the ATC Sensor calibration code on the ATC Sensor. This is the 3-digit number in the 3rd line of text on the label (it will always start with a zero).
   c. Enter the Diagnostic Mode.
   d. From the **Maintenance/Diagnostics** screen, select the **ATC Sensor Setup** button.
   e. Enter the last 2 digits of this code into the appropriate column of the display, using the up/down arrows.

f. Press the **Start** button on the Control Panel.

g. If the Developer Housing was replaced, proceed to ADJ 9.8.

ADJ 9.8 Default Developer ATC Setup

Purpose

Immediately after the replacement of a Developer Housing with known toner density, this sets the ATC Target Value by having the ATC Sensor measure the toner density of the developer. This can also work as the check function of the ATC Sensor.

Adjustment

1. Enter the Diagnostic Mode (UI Diagnostic (CSE) Mode).
2. From the **Maintenance/Diagnostics** screen, select the **ATC Sensor Setup** button.
3. Select the ON button for the color(s) to be set up.
4. Select the **Start** button.
5. When the routine completes, the screen will display:
   - ATC Measurement Value
   - ATC Target Value
   - Measurement Result - If this is NG, check that the ATC sensor is connected and undamaged.
   - Setup Result - If this is NG, check that the ATC sensor is connected and undamaged.

ADJ 9.9 Registration Measurement Cycle

Purpose

To measure the color registration and display the status by indicating OK/NG.

This cycle performs the color Registration measurement that includes the detection of AC component to determine the condition of AC control (Drum Drive, Belt Drive, etc.), which is one of the color Registration components.

NOTE: *Correction is not performed.*

- Performs Registration measurement to determine the condition of the AC control.
- Checks that the Belt control etc. are operating normally.
- Measures/displays the amount of color shift relative to Black in the Fast Scan/Slow Scan direction.
- Displays the result of comparison with the target value as OK/NG.

Procedure

1. Enter UI diagnostics (UI Diagnostic (CSE) Mode) and select **Registration**.
2. Select **Registration Measuring Cycle**.
3. Press **Start**. **OK** or **NG** will be displayed in the **Result** column.

If NG is displayed:

1. Go to GP 6. Press the **Machine Status** button on the Control Panel. The **Machine Status** screen opens.
2. Select the **Billing Meter/Print Report** tab.
3. Select **Print Report/List**.
4. Press the **CE** button. The **CE** screen opens
5. Press the **Failure Report** button.
6. Press the **Start** button. The report is printed.
7. Examine the Failure report to see if there are any Chain **089** fault codes. These are only on the Failure report and are printed on page 3.
8. Troubleshoot these codes.

ADJ 9.10 Registration Control Setup Cycle

Purpose

To set the most appropriate Registration Control correction value for skew etc. at setup, or after replacing any of the following parts:

- LPH replacement/detachment
- 2nd BTR replacement/detachment
- Transfer Belt replacement/detachment² IBT CLN Unit replacement/detachment
- IBT Module replacement/detachment (recommended)² Developer replacement/detachment

The Setup Cycle is made up of the following 2 functions.

Function 1: Performed right after assembling or during field installation or when replacing a key part. Also, this is a Registration Control Full Cycle that can be performed in the Diagnostic. mode right after the NVM is initialized. Executing this function corrects the Color Registration into the predefined range. The corrected shift amount for each color is saved in the NVM and it is displayed at normal completion.

Function: On entering a setup cycle, the IOT does not start. The Registration Control shift correction amount is displayed automatically on the UI screen and is used as a tool for determining the cause when a failure occurs.

Procedure

1. Enter UI diagnostics (UI Diagnostic (CSE) Mode) and select **Registration**.
2. Select **Registration Control Setup Cycle**.
3. Select **Start**. The shift amount for each color is corrected automatically.
4. Perform ADJ 9.9.

ADJ 9.11 Registration Control Sensor Check Cycle

Purpose

This is a self-diagnostic cycle for checking that the misregistration detection system (MOB Sensor) is operating normally. The color shift amount is detected using Cyan patch. Any mis-registration detected in the MOB sensor is displayed on the screen.

This detection result is compared again with the target value to determine the pass/fail (OK/NG) status. Correction is not performed.

Adjustment

1. Enter the **UI Diagnostic (CSE) Mode**.
2. Select the Adjustments tab.
3. Select dC673 Registration Control Sensor Check.
4. Select **Start**.
5. When the test completes, the results will be displayed. If the measured value for any parameter is larger than the target value by 10, NG is displayed in the Judgement column.
   - If NG, check that Cyan is being printed; if so, replace the MOB Sensor Assembly.
   - If Cyan is not being printed, there is a problem in Development or 1st Transfer.

ADJ 9.13 TRC Manual Adjustment

Purpose

CAUTION

Perform this adjustment only to correct a strong customer complaint. Altering the setpoints will affect both Print and Copy modes. Also, there is quite a bit of overlap among the low, medium, and high densities. For these reasons, it is recommended that this procedure not be used unless absolutely necessary.

To adjust image quality (TRC) to meet the user's preference, by increasing or decreasing the center value of gradation correction for each (YMCK) color, in low density, medium density, and high density ranges.

Adjustment

1. Enter the UI Diagnostic (CSE) Mode.
2. Select the **Adjustments** tab.
3. Select **dc924 TRC Manual Adjustment**.
4. Under the **Adjustment Options** tab, select **Copy and Print**.
5. Select **Read Values** to get the current values.

   NOTE: *Selecting **Reset Values** will return ALL values to 0.*

6. For each color, enter in the new values for Low, Medium, and High. The default is 0, and the range is from -128 to +127.
7. Select **Write Values** to save the values entered.
8. Perform a Call Closeout, then switch the machine power off then on.
9. Make 2 prints or copies. Ask the customer if the desired result is achieved.
10. Repeat steps 2 through 6 until the customer is satisfied with the image quality.

ADJ 9.14 Toner Density Setup (Tone Up/Down)

Purpose

This procedure manually increases or decreases toner concentration (TC). It is used when a xerographic problem or out-of-toner condition has prevented process control from maintaining the TC target value.

This procedure does not change any parameters; it performs a one-time change to TC. It is important that the problem that caused the low or high TC condition is resolved before performing this adjustment.

Check

1. Enter the UI Diagnostic (CSE) Mode.
2. Select the Adjustments tab.
3. Select dC937 Pro Con On/Off Print.
4. Select **Print**.
5. Compare the values for **ATC Average** with the values for **ATC Target**. If the values differ by more than 25 bits for Y, M, or C; or by more than 50 bits for K, perform the **Adjustment**.

Adjustment

1. Enter the UI Diagnostic (CSE) Mode**.**
2. Select the **Adjustments** tab.
3. Select dC991 Tone Up/Tone Down.
4. For each color that is above or below target, enter a value between -99 and 99 into the row and select This value is the number of tone up or tone down cycles to be performed. Negative values increase the **ATC Average**; positive values decrease **ATC Average**.
5. **Start** on the UI.
6. Repeat as required until **ATC Average** matches **ATC Target**. If the measured (average) value cannot be set to the target, there is a problem in either the toner delivery system (Dispenser, low toner sensor, etc.), or in the TC detection circuitry.

ADJ 9.15 UI Touch Panel Origin Point Correction

Purpose

To align the position of the buttons on the display and the Touch Panel so that the user can select the contents on the display using the Touch Panel. Perform this adjustment when the UI PWB and the Control Panel are replaced

Adjustment

This procedure is part of UI Diagnostics (ADJ 4.1)

ADJ 9.16 MAX Setup

Purpose

This procedure checks, and, if necessary, adjusts, several Image Quality factors so that optimum copy and print quality can be consistently obtained, by stabilizing the development potential and copy density.

Check

1. Reset the TRC Adjust values (ADJ 9.13) and Copy Mode Color Balance values to midpoint (**0**).
2. Perform the ProCon On/Off Print check (ADJ 9.3). If the check is good, go to step 5.
3. If the prints display any Inboard-to-Outboard density variation, perform the Adjustment.
4. If Print quality is OK but Copy quality is bad, perform the **IIT Procedures** portion of the Adjustment.
5. Perform the following as required by the customer: TRC Adjust (ADJ 9.13); Color Balance. DO NOT perform the **Adjustment** unless problems are encountered in this **Check**.

Adjustment

Max Setup consists of several separate procedures that should be performed in the following sequence:

IOT Procedures

1. Verify the ATC Sensor Setup (ADJ 9.7), then proceed to step 2. Ensure that the calibration codes have not been reset to the default values.
2. Perform the ProCon On/Off Print check (ADJ 9.3), then proceed to step 3.
3. If the prints display any Inboard-to-Outboard density variation go to dC612. Print out test pattern #12 - In/out adjustment_primary color (4C). Evaluate the prints for inboard-to-outboard density variation. If problems are observed, perform ADJ 9.11, then proceed to step 4.
4. If Print quality is OK but Copy quality is bad, go to the **IIT Procedures**; otherwise proceed to step 5.
5. Perform the following as required by the customer: TRC Adjust (ADJ 9.13); Color Balance.

IIT Procedures

Perform these steps ONLY if sent here from the **IOT Baseline Checks**. IIT Calibration **SHOULD NOT** be performed as a routine part of the Adjustment.

1. If any IIT or IPS repairs were performed, perform the IIT Calibration (dC945), then proceed to step 2.
2. Make a copy of the ProCon On pattern that was printed in step 2 of the Baseline Checks. Compare the copy to the original print. Return to 5 of the IOT Procedures.

ADJ 12.1 Professional Finisher Leveling

Purpose

The Finisher level should be checked if the machine has been moved to a new location or if the machine is having Booklet Quality issues or entrance jams.

Adjustment

1. Press the **Job Status** button to check that there are no jobs in progress.
2. Switch off the power and disconnect the power cord.
3. Verify that the Finisher is properly latched and secured to the IOT.
4. Verify that the Finisher is Level and parallel with the IOT (Figure 1).

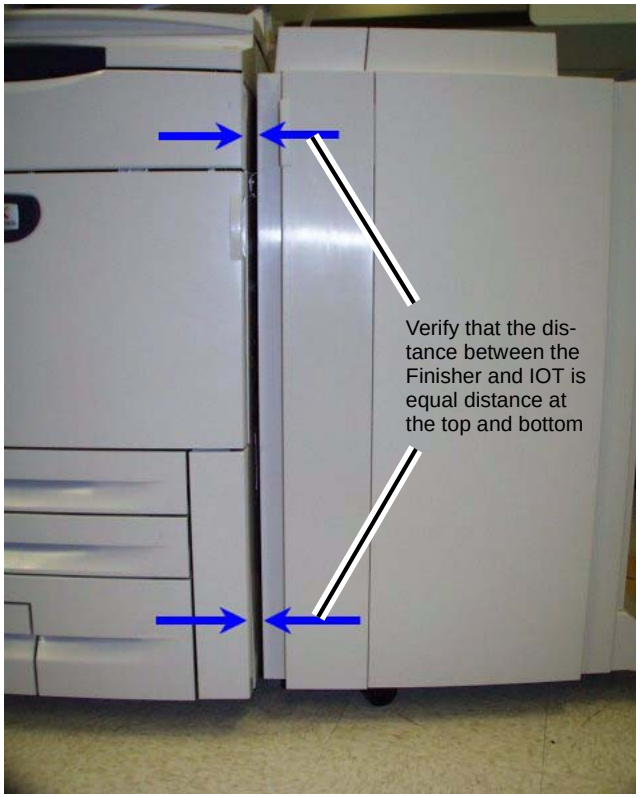

Figure 1 Verifying Finisher Level

5. Adjust the Finisher Level so that it is parallel with the IOT (Figure 2).

Figure 2 Leveling the Finisher

6. When Finisher is parallel to the IOT, verify that the H-Transport does not interfere with the Finisher Entrance Gate.

ADJ 12.2 Professional Finisher Booklet Fold Skew

Purpose

To adjust the Booklet Maker so that the fold is square.

Check

1. Set machine up according to instructions in Table 1 and run a set of each Booklet job. Label each booklet.

Table 1 Booklet Jobs

Job	Select Paper Supply	Select Booklet Creation Mode	Originals in DADF	Booklet Size
1	8.5 x 11 / A4 SEF	Booklet Layout, 2 sided originals / Booklet Fold Only	6 sheets of 8.5 x 11 / A4 LEF	3 sheet
2	11 x 17 / A3 SEF	Booklet Layout, 2 sided originals / Booklet Fold Only	6 sheets of 8.5 x 11 / A4 LEF	3 sheet

2. Measure the skew (A) on all sheets of paper and verify against the Skew Specification table in Figure 1.

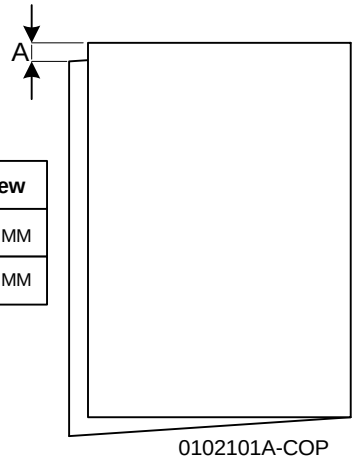

Paper Size	Max. Skew
Smaller than 14 in. / B4	0.0 +/- 1.5 MM
14 in. / B4 and larger	0.0 +/- 2.0 MM

Skew Specification

Figure 1 Skew Specification

3. If the fold is within specification on all sheets, go to ADJ 12.5 Booklet Fold Position. If any of the sheets are out of specification, go to the adjustment.

Adjustment

1. Determine the type of Fold Skew:

   a. Set machine up according to instructions in Table 2.

Table 2 Booklet Jobs

Job	Select Paper Supply	Select Booklet Creation Mode	Originals in DADF	Booklet Size
1	11 x 17 / A3 SEF	Booklet Layout, 2 sided originals / Booklet Fold Only	6 sheets of 8.5 x 11 / A4 LEF	3 sheet

   b. Observe the booklet as it comes out on to the Booklet Tray (Figure 2) and determine the type of skew.

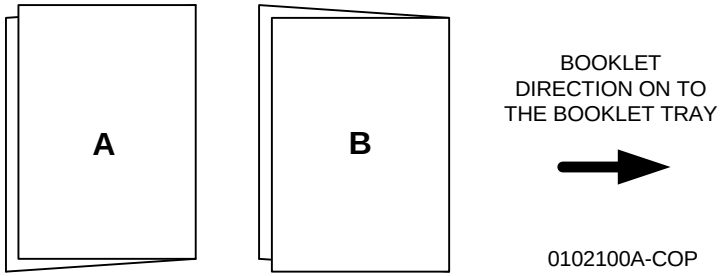

Figure 2 Type of skew

2. Adjust the Booklet skew (Figure 3).

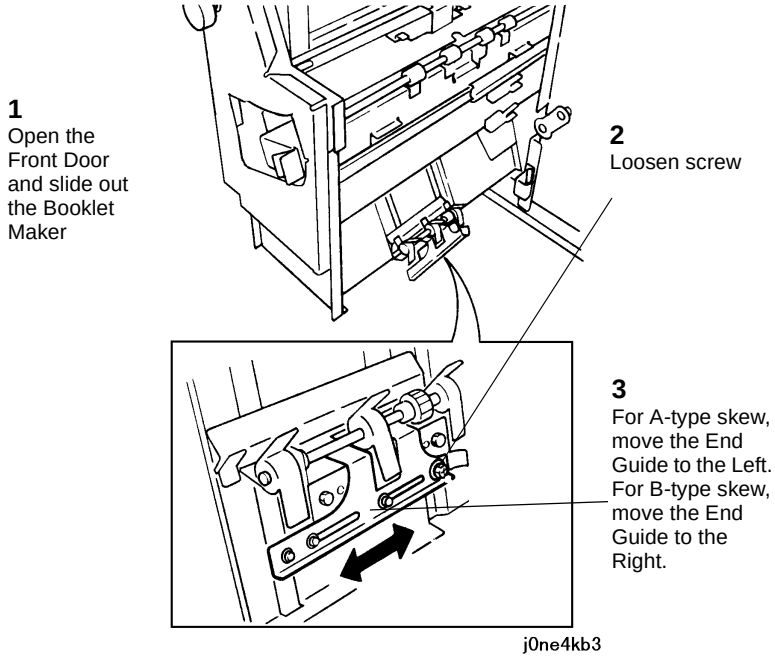

Figure 3 Adjusting the Fold Skew

3. Set machine up according to instructions in Table 1 and re-run sample job.
4. Repeat steps 1 - 3 until the Fold Skew setup meets specification or customer request.
5. After adjustment is done, go to ADJ 12.3 Booklet Fold Position.

ADJ 12.3 Professional Finisher Booklet Fold Position

Purpose

The purpose of this adjustment is to set up the Booklet Maker so that the fold is in the center of the booklet. Several setups are required so that fold position can be set for paper size, set size, unstapled and stapled sets.

Check

NOTE: *This procedure cannot be performed from Paper Trays 3 or 4 as the folding activity requires Short Edge Feed (SEF).*

1. Ensure that the trays used are correctly programmed.
2. Ensure that the Fold Skew is within specification (ADJ 12.2).
3. Enter UI Diagnostic (CSE) Mode.

NOTE: *There are 10 different fold position parameters available in UI diagnostics. All of them will need to be adjusted.*

4. If the NVM Setting Value List for the Finisher is available, select dC131 from the **Adjustments** Tab, and enter the recorded values for the NVM locations listed in Table 1. Then, proceed to the next step.
5. Under the **Adjustments** Tab, select **dC128**.
6. On the dC128 screen, select the **Type** and **Position Adjustment** parameter for Job #1 in Table 1. Select a paper tray containing SEF paper larger than B4 (11 x 17”/A3 preferred)
7. Touch the **Test Print** button to print a sample.
8. Measure and record “X1” and verify Fold Position on that job against the Fold Specification table in Figure 1.

Paper Size	X1
Smaller than 14 in. / B4	0.0 +/- 1.5 MM
14 in. / B4 and larger	0.0 +/- 2.0 MM

Fold Position Specification

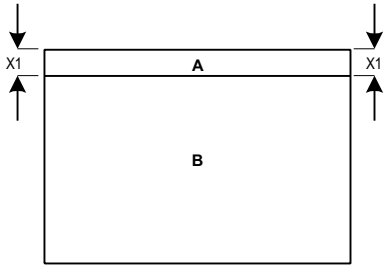

Note: *Example showing A-side longer than B-side*

NOTE: TO DETERMINE WHICH SIDE IS "A" AND WHICH SIDE IS "B", OPEN THE BOOKLET AS IT COMES OUT ON THE BOOKLET TRAY. THE "A"-SIDE IS TO THE LEFT AND THE "B"-SIDE IS TO THE RIGHT.

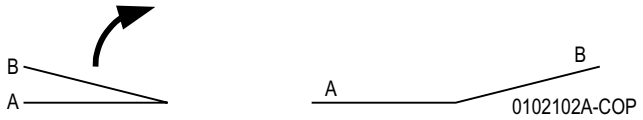

Figure 1 Fold Specification

9. If the particular fold is not within specification, perform the Adjustment.
10. Repeat steps 6 - 9 for all other jobs in Table 1. Make sure that you select an appropriate paper tray for the booklet size being adjusted.
11. When the fold is within specification on all jobs, go to the Booklet Staple Position (Staple on Fold) (ADJ 12.4).

Table 1 Fold Position jobs

Job	Type	Position Adjustment	Pro. Fin. NVM
1	Bi-fold	Booklet Bi-fold position - B4 or larger	763-106
2	Booklet	Plain Booklet - 2 sheet fold position	763-133
3	Booklet	Plain Booklet - 3 or more sheet fold position.	763-134
4	Booklet	Stapled Booklet 2 sheet fold position B4 or larger	763-108
5	Booklet	Stapled Booklet 3 sheet fold position B4 or larger	763-152
6	Booklet	Stapled Booklet 4 sheet fold position B4 or larger	763-153
7	Booklet	Stapled Booklet 5/7 sheet fold position B4 or larger	763-154
8	Booklet	Stapled Booklet 8/14 sheet fold position B4 or larger	763-155
9	Booklet	Stapled Booklet 15 sheet fold position B4 or larger	763-145
10	Booklet	Booklet Tamper Shift Position	763-115

Adjustment

1. For each Test Print that was out of spec:
   a. To make the ‘B’ side (Figure 1) longer, increase the value. To make the ‘B’ side shorter, decrease the value. Each count is equal to about 0.2 mm (5 counts will move the fold position 1mm).
   b. Use the up and down arrows or the keypad to enter the correction and select **Write NVM**, then make another **Test Print**.
2. Check output against specifications in Figure 1. Repeat the **Check** and **Adjustment** until the Fold Position meets specification or customer request.

ADJ 12.4 Professional Finisher Booklet Staple Position (Staple on Fold)

Purpose

The purpose of this Adjustment is to set up the machine so that the Staples are within specification on the folded booklet.

Check

1. Ensure that the trays used are correctly programmed.
2. Ensure that the Fold Skew is within specification (ADJ 12.2).
3. Ensure that the Fold Position is within specification (ADJ 12.3).
4. Enter UI Diagnostic (CSE) Mode.

NOTE: *There are 6 different Staple-on Fold parameters available in UI diagnostics. All of them will need to be adjusted.*

5. If the NVM sheet for the Finisher is available (Tray 1 compartment), select dC131 from the **Adjustments** Tab, and enter the recorded values for the NVM locations listed in Table 1.
6. Under the **Adjustments** Tab, select dC128.
7. On the dc128 screen, select the **Type** and **Position Adjustment** parameter for Job #1 in Table 1. Select a paper tray containing paper larger than B4 (11 x 17”/A3 preferred)
8. Touch the **Test Print** button to print a sample.
9. Measure and record X1 and compare the staple position against the specification in (Figure 1). Ensure that all staples are within +/- 1.0 mm of the fold (X1 dimension).
10. If X1 is out of specification, perform the Adjustment procedure.
11. Repeat steps 7 - 10 for all other jobs in Table 1. Make sure that you select an appropriate paper tray for the booklet size being adjusted.
12. When the staple position is within specification on all jobs, go to (ADJ 12.5) Booklet Staple Alignment.

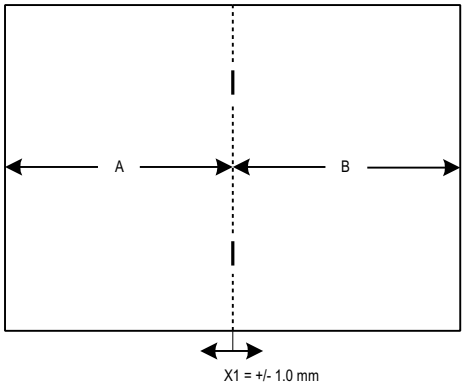

NOTE: TO DETERMINE WHICH SIDE IS "A" AND WHICH SIDE IS "B", OPEN THE BOOKLET AS IT COMES OUT ON THE BOOKLET TRAY. THE "A"-SIDE IS TO THE LEFT AND THE "B"-SIDE IS TO THE RIGHT.

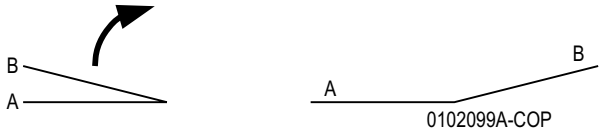

Figure 1 Staple Position

Table 1 Staple Position Jobs

Job	Type	Position Adjustment	Pro Fin. NVM
1	Booklet	Stapled Booklet 2 sheet staple and fold position B4 or larger	763-110
2	Booklet	Stapled Booklet 2 sheet staple and fold position smaller than B4	763-111
3	Booklet	Stapled Booklet 3 sheet staple and fold position	763-147
4	Booklet	Stapled Booklet 4 sheet staple and fold position	763-148
5	Booklet	Stapled Booklet 5/7 sheet staple and fold position	763-149
6	Booklet	Stapled Booklet 8/14 sheet staple and fold position	763-150

Adjustment

1. For each Test Print that was out of spec:
   a. To move the staples to the right (toward the B side) (Figure 1), increase the value; to move the staples to the left, decrease the value. Each count is equal to about.1 mm (10 counts to move the staple position 1mm).
   b. Use the up and down arrows or the keypad to enter the correction and select **Write NVM**, then make another **Test Print**.
2. Check output against specifications in Figure 1. Repeat the **Check** and **Adjustment** until the Fold Position meets specification or customer request.

ADJ 12.5 Professional Finisher Booklet Staple Alignment

Purpose

To center the Staple Position on the fold in the SE direction.

Check

1. Ensure that the trays used are correctly programmed.
2. Ensure that the Fold Skew is within specification (ADJ 12.2).
3. Ensure that the Fold Position is within specification (ADJ 12.3).
4. Ensure that the Staple Position is within specification (ADJ 12.4).
5. Enter UI Diagnostic (CSE) Mode > **Adjustments** > **dC 128 Fold Position Adjustment**.
6. From the drop-down menu, select **Booklet Staple**.
7. Select the paper tray to be tested.
8. On a scrap piece of paper, record the **Stored NVM Value**.
9. Select **Test Print**.
10. When the test print is completed, remove it from the Output Tray. Open the booklet up and perform the following:
    - Record the number of the test print (test print 1, test print 2, etc.).
    - Label the outboard edge of the print (for X1 measurement).
11. Measure X1 and verify against specification in Figure 1.

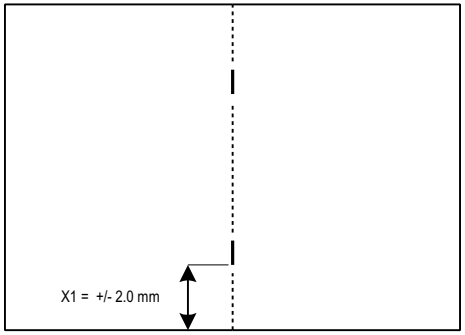

PAPER SIZE / ORIENTATION	X1
8.5 X 11 / SEF	42.5 mm
8.5 X 13 / SEF	42.5 mm
8.5 X 14 / SEF	42.5 mm
11 X 17 / SEF	74.2 mm
8 K / SEF	68 mm
A4 / SEF	39.5 mm
A3 / SEF	83 mm
B4 / SEF	63 mm

0102103A-COP

Figure 1 Staple Specification

12. If X1 is within specification, the Adjustment is complete. If X1 is out of specification, perform the Adjustment procedure.

Adjustment

NOTE: *X1 will be adjusted in dC 128 using the* ***Adjust*** *tab on the UI.*

- *To increase X1, the current NVM value should be decreased.*
- *To decrease X1, the current NVM value should be increased.*
- *1 NVM count will move the staple position 0.26mm. (10 counts will move the staple position about 2.6mm).*

1. Estimate the correction needed on the paper size(s) that did not meet specification.
2. Using the **Adjust** tab on the UI, adjust the NVM value up or down as required.

NOTE: *The* ***Write NVM*** *tab must be selected in order for the NVM change to be visible on the test print.*

3. Select the **Write NVM** tab.
4. Select the **Test Print** tab to run the job.
5. Measure X1 and compare against the specifications in (Table 1).
6. Repeat the Adjustment until the Staple Alignment meets specification or customer request.

Table 1 Booklet Jobs

Job	Select Paper Supply	Select Booklet Creation Mode	Originals in DADF	Booklet Size
1	8.5 x 11 / A4 SEF	Booklet Layout, 2 sided originals / Booklet Fold Only	6 sheets of 8.5 x 11 / A4 LEF	3 sheet
2	11 x 17 / A3 SEF	Booklet Layout, 2 sided originals / Booklet Fold Only	6 sheets of 8.5 x 11 / A4 LEF	3 sheet

ADJ 12.6 Professional Finisher Booklet Wrinkle

Purpose

To prevent the Booklet Cover from getting wrinkled.

Check

- Press the **Job Status** button to check that there are no jobs in progress.
- Switch off the power and disconnect the power cord.
- Verify that the customer is not running jobs that are out of specification.
- Check Fold Rollers for wear or contamination.

Adjustment

1. Remove the Booklet Maker (REP 21.16).
2. Remove KL-clip (Figure 1).

Figure 1 Removing the KL-clip

3. Remove the Booklet Maker Front Cover (Figure 2).

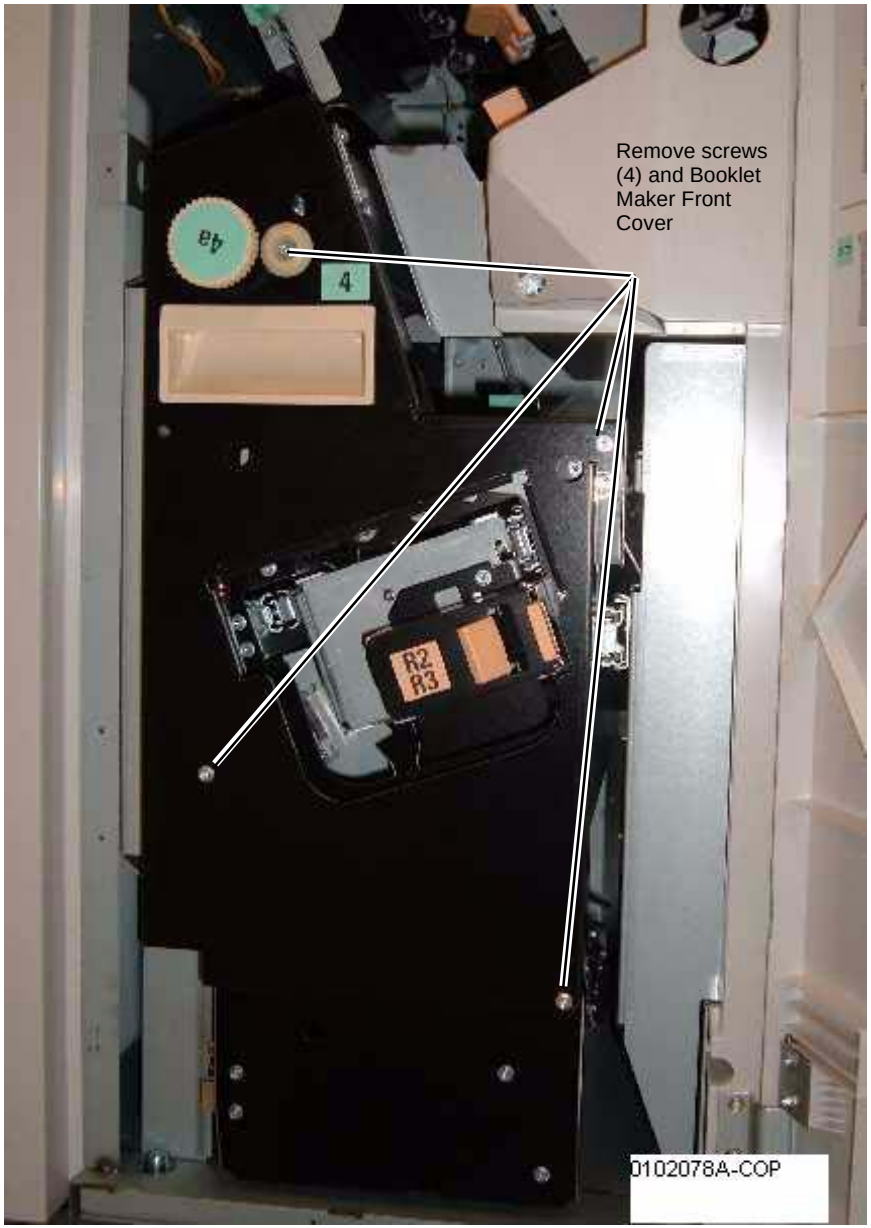

Figure 2 Removing the Booklet Maker Front Cover

4. Adjust the front Spring tension (Figure 3).

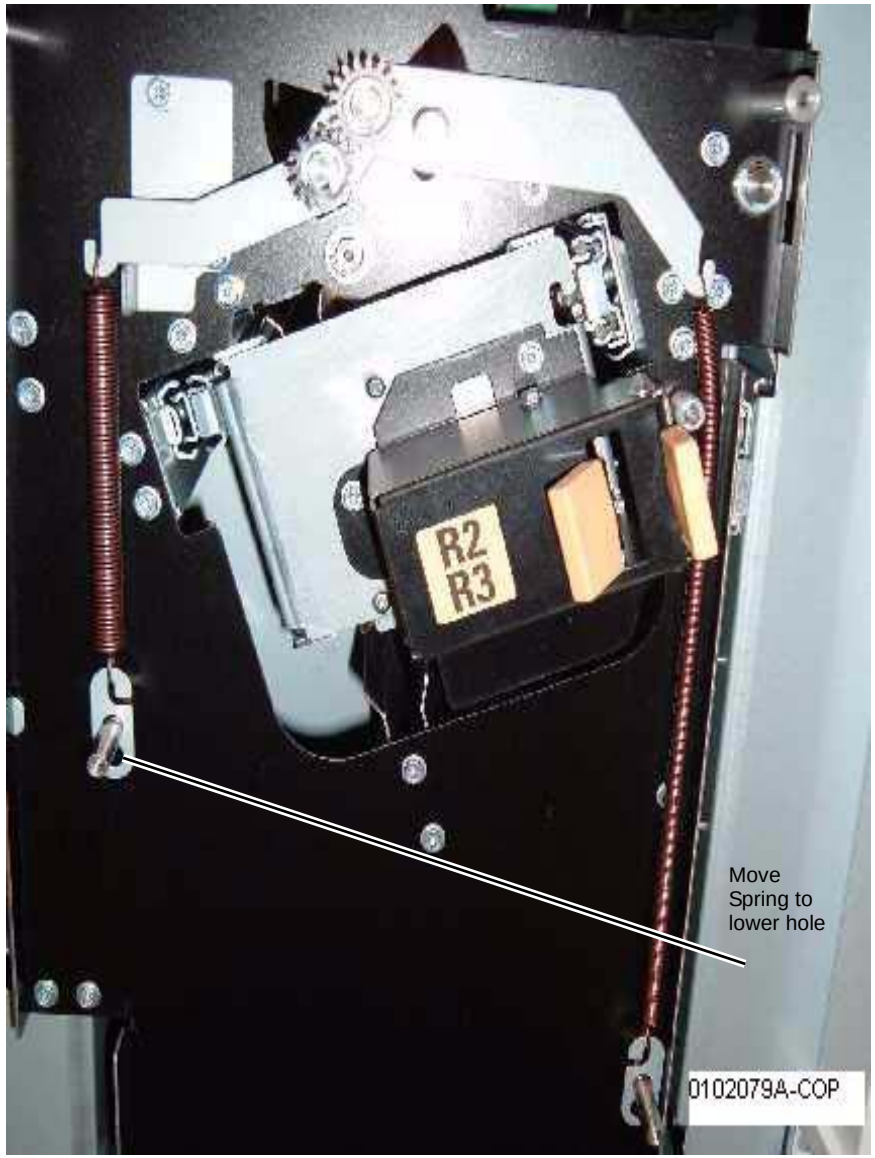

Figure 3 Adjust the front Spring tension

Figure 4 Adjusting the rear Spring tension

5. Adjust the rear Spring tension (Figure 4).

ADJ 12.7 Professional Finisher Booklet Fold Position (Fine Adjustment)

Purpose

The purpose with this adjustment is to set up the Booklet Maker so that the fold is in the center of the booklet. Several setups are needed depending on paper size, set size, unstapled or stapled sets.

Check

1. Ensure that the trays used are correctly programmed.
2. Ensure that the Fold Skew is within specification (ADJ 12.2).
3. Ensure that the Fold Position is within specification (ADJ 12.3).
4. Ensure that the Staple Position is within specification (ADJ 12.4).
5. Set machine up according to instructions in Table 1 and run 1 set of each job. Label each booklet.

Table 1 Fine Adjustment

Job	Select Paper Supply	Select Booklet Creation Mode	Originals in DADF	Output Booklet Size
1	8.5 x 11 / A4 SEF	Booklet Layout, 2 sided originals / Booklet Fold and Staple	6 sheets of 8.5 x 11 / A4 LEF	3 sheets
2	8.5 x 11 / A4 SEF	Booklet Layout, 2 sided originals / Booklet Fold and Staple	8 sheets of 8.5 x 11 / A4 LEF	4 sheets
3	8.5 x 11 / A4 SEF	Booklet Layout, 2 sided originals / Booklet Fold and Staple	10 sheets of 8.5 x 11 / A4 LEF	5 - 7 sheets (setup is for 5 - 7 sheets)
4	8.5 x 11 / A4 SEF	Booklet Layout, 2 sided originals / Booklet Fold and Staple	16 sheets of 8.5 x 11 / A4 LEF	8 - 14 sheets (setup is for 8 - 14 sheets)
5	11 x 17 / A3 SEF	Booklet Layout, 2 sided originals / Booklet Fold and Staple	6 sheets of 8.5 x 11 / A4 LEF	3 sheets
6	11 x 17 / A3 SEF	Booklet Layout, 2 sided originals / Booklet Fold and Staple	8 sheets of 8.5 x 11 / A4 LEF	4 sheets
7	11 x 17 / A3 SEF	Booklet Layout, 2 sided originals / Booklet Fold and Staple	10 sheets of 8.5 x 11 / A4 LEF	5 - 7 sheets (setup is for 5 - 7 sheets)
8	11 x 17 / A3 SEF	Booklet Layout, 2 sided originals / Booklet Fold and Staple	16 sheets of 8.5 x 11 / A4 LEF	8 - 14 sheets (setup is for 8 - 14 sheets)
9	11 x 17 / A3 SEF	Booklet Layout, 2 sided originals / Booklet Fold and Staple	30 sheets of 8.5 x 11 / A4 LEF	15 sheets

Table 1 Fine Adjustment

Job	Select Paper Supply	Select Booklet Creation Mode	Originals in DADF	Output Booklet Size
10	8.5 x 11 / A4 SEF	Booklet Layout, 2 sided originals / Booklet Fold and Staple	30 sheets of 8.5 x 11 / A4 LEF	15 sheets

6. Measure X1 and verify Fold Position on each job against the Fold Specification table in Figure 1.

Paper Size	X1
Smaller than 14 in. / B4	0.0 +/- 1.5 MM
14 in. / B4 and larger	0.0 +/- 2.0 MM

Fold Position Specification

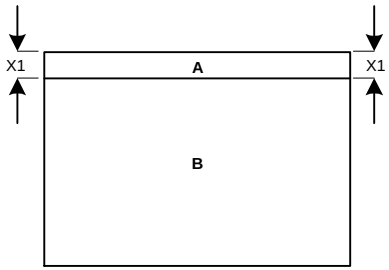

Note: *Example showing A-side longer than B-side*

NOTE: TO DETERMINE WHICH SIDE IS "A" AND WHICH SIDE IS "B", OPEN THE BOOKLET AS IT COMES OUT ON THE BOOKLET TRAY. THE "A"-SIDE IS TO THE LEFT AND THE "B"-SIDE IS TO THE RIGHT.

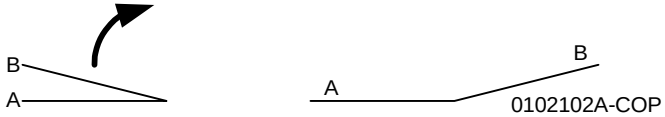

Figure 1 Fold Specification

7. If the fold is within specification on each job, go to the Booklet Staple Position (Staple on Fold Fine Adjustment) (ADJ 12.8). If any of the booklets are out of specification, go to the Adjustment procedure.

Adjustment

1. Enter dC131.
2. Perform adjustment using the NVM locations in Table 2.

NOTE: *If the "A"-side is longer than the "B"-side, the current NVM value should be increased. If the "B"-side is longer than the "A"-side, the current NVM value should be decreased.*

Table 2 Fine Adjustment NVM locations

Job #	NVM	Default	Range	Remark
1	763-141	100	0 ~ 200	1 count = 0.1 mm. Target amount to be adjusted is half the amount of the total Fold Misalignment.
2	763-142	100	0 ~ 200	1 count = 0.1 mm. Target amount to be adjusted is half the amount of the total Fold Misalignment.
3	763-143	100	0 ~ 200	1 count = 0.1 mm. Target amount to be adjusted is half the amount of the total Fold Misalignment.
4	763-144	100	0 ~ 200	1 count = 0.1 mm. Target amount to be adjusted is half the amount of the total Fold Misalignment.
5	763-152	100	0 ~ 200	1 count = 0.1 mm. Target amount to be adjusted is half the amount of the total Fold Misalignment.
6	763-153	100	0 ~ 200	1 count = 0.1 mm. Target amount to be adjusted is half the amount of the total Fold Misalignment.
7	763-154	100	0 ~ 200	1 count = 0.1 mm. Target amount to be adjusted is half the amount of the total Fold Misalignment.
8	763-155	100	0 ~ 200	1 count = 0.1 mm. Target amount to be adjusted is half the amount of the total Fold Misalignment.
9	763-145	100	0 ~ 200	1 count = 0.1 mm. Target amount to be adjusted is half the amount of the total Fold Misalignment.
10	763-146	100	0 ~ 200	1 count = 0.1 mm. Target amount to be adjusted is half the amount of the total Fold Misalignment.

3. Set up and re-run the job/s that were subject to adjustment (Table 1).
4. Check output against specifications in Figure 1.
5. Repeat steps 2 - 4 until the Fold Position meets specification or customer request.
6. After adjustment is done, go to ADJ 12.8 Booklet Staple Position (Staple on Fold Fine Adjustment.

ADJ 12.8 Professional Finisher Booklet Staple Position (Staple on Fold Fine Adjustment)

Purpose

To set up the machine so that the Staples are within specification on the folded booklet.

Check

1. Ensure that the trays used are correctly programmed.
2. Ensure that the Fold Skew is within specification (ADJ 12.2).
3. Ensure that the Fold Position is within specification (ADJ 12.3).
4. Ensure that the Staple Position (Staple on Fold) is within specification (ADJ 12.4).
5. Ensure that the Fold Position (Fine Adjust) is within specification (ADJ 12.7).
6. Set machine up according to instructions in Table 1 and run 1 set of each Booklet job. Label each booklet.

Table 1 Booklet Jobs

Job	Select Paper Supply	Select Booklet Creation Mode	Originals in DADF	Output Booklet Size
1	8.5 x 11 / A4 SEF	Booklet Layout, 2 sided originals / Booklet Fold and Staple	6 sheets of 8.5 x 11 / A4 LEF	3 sheets
2	8.5 x 11 / A4 SEF	Booklet Layout, 2 sided originals / Booklet Fold and Staple	8 sheets of 8.5 x 11 / A4 LEF	4 sheets
3	8.5 x 11 / A4 SEF	Booklet Layout, 2 sided originals / Booklet Fold and Staple	10 sheets of 8.5 x 11 / A4 LEF	5 sheets (setup is for 5 - 7 sheets)
4	8.5 x 11 / A4 SEF	Booklet Layout, 2 sided originals / Booklet Fold and Staple	16 sheets of 8.5 x 11 / A4 LEF	8 sheets (setup is for 8 - 14 sheets)

7. Measure A and B on both Booklet jobs and verify X1 against specification in Figure 1.
8. If X1 is within specification, the complete Booklet Maker setup is done. If X1 is out of specification, go to the Adjustment procedure.

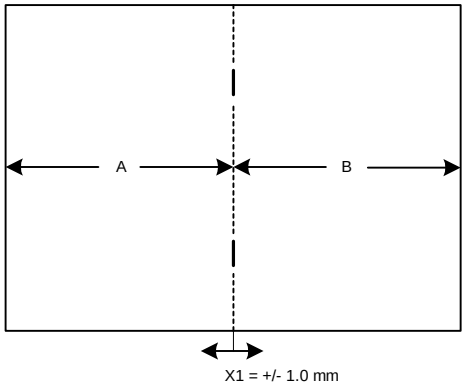

NOTE: TO DETERMINE WHICH SIDE IS "A" AND WHICH SIDE IS "B", OPEN THE BOOKLET AS IT COMES OUT ON THE BOOKLET TRAY. THE "A"-SIDE IS TO THE LEFT AND THE "B"-SIDE IS TO THE RIGHT.

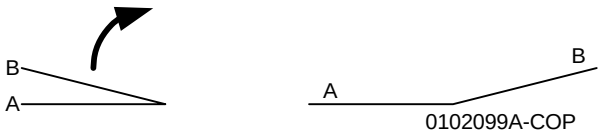

Figure 1 Staple Position

Adjustment

1. Enter dC131.
2. Perform adjustment using the NVM locations in Table 2.

   NOTE: *If the "A"-side is longer than the "B"-side, increase the current NVM value. If the "B"-side is longer than the "A"-side, decrease the current NVM value.*

Table 2 NVM locations

Job #	NVM	Default	Range	Remark
1	763-147	100	0 ~ 200	1 count = 0.1 mm. Target amount to be adjusted is half the amount of the total Fold Misalignment.
2	763-148	100	0 ~ 200	1 count = 0.1 mm. Target amount to be adjusted is half the amount of the total Fold Misalignment.
3	763-149	100	0 ~ 200	1 count = 0.1 mm. Target amount to be adjusted is half the amount of the total Fold Misalignment.
4	763-150	100	0 ~ 200	1 count = 0.1 mm. Target amount to be adjusted is half the amount of the total Fold Misalignment.

3. Set up and run the job/s that were subject to adjustment (Table 1).
4. Check output against specifications in Figure 1.
5. Repeat steps 2 - 4 until the Staple Position meets specification or customer request.

ADJ 12.9 Finisher LX Hole Punch Position

Purpose

This procedure sets the distance from the trail edge of the punched sheet to the center of the punched holes.

NOTE: *This adjustment is normally performed by the customer, via Tools mode.*

Check

1. Enter Service Copy (Tools) Mode. Select **Troubleshooting**, then **Hole Position Adjustment**.
2. Choose whether you want separate adjustments for different sizes.
3. Press **Print** on the UI.
4. Measure the distance between the trail edge of the sheet and the center of the bottom hole. If the distance is not 10 +/- 3 mm, perform the Adjustment

Adjustment

1. Use the buttons on the UI to move the holes left or right. When the computed correction is made, select **Adjust**.
2. Repeat the Check and Adjustment until the measurement is correct
3. When the adjustment is complete, log out of Service Copy mode.

ADJ 12.10 Finisher LX Booklet Crease/Staple Position

Purpose

This procedure centers the crease and staple positions in the booklet.

NOTE: *This adjustment is normally performed by the customer, via Tools mode.*

Adjustment

1. Enter Service Copy (Tools) Mode. Select **Troubleshooting**, then **Crease and Staple Adjustment**.
2. Select the paper size to be set, and load paper of that size into tray 5 (MSI).
3. Follow the instructions on the UI to Check/Adjust the Crease position and the Staple position.
4. When the adjustment is complete, log out of Service Copy mode.

5 Parts List

Overview

Introduction 5-5
Subsystem Information 5-6
Symbology 5-7

Parts Lists

1. IIT/CP

PL 1.1 Platen/IIT Cover 5-9
PL 1.2 Control Panel/Platen Glass 5-10
PL 1.3 Control Panel (1 of 2) 5-11
PL 1.4 Control Panel (2 of 2) 5-12
PL 1.5 CCD Lens Assembly 5-13
PL 1.6 Carriage Cable/Motor 5-14
PL 1.7 Full/Half Rate Carriage 5-15
PL 1.8 IIT/IPS PWB 5-16
PL 1.9 Convenience Stapler 5-17

2. LED

PL 2.1 LED Print Head (1 of 2) 5-18
PL 2.2 LED Print Head (2 of 2) 5-19

3. Drives

PL 3.1 Drives (1 of 4) 5-20
PL 3.2 Drives (2 of 4) 5-21
PL 3.3A Drives (7525/7530/7535)(3 of 4) 5-22
PL 3.3B Drives (7545/7556)(4 of 4) 5-23

4. NOHAD

PL 4.1 NOHAD Common 5-24
PL 4.2A NOHAD (7525, 7530, 7535)(1 of 3) 5-25
PL 4.2B NOHAD (7545, 7556)(1 of 3) 5-26
PL 4.3A NOHAD (7525, 7530, 7535)(2 of 3) 5-27
PL 4.3B NOHAD (7545, 7556)(2 of 3) 5-28
PL 4.4A NOHAD (7525, 7530, 7535)(3 of 3) 5-29
PL 4.4B NOHAD (7545, 7556)(3 of 3) 5-30

5. Development

PL 5.1 Development (1 of 2) 5-31
PL 5.2 Development (2 of 2) 5-32
PL 5.3 HVPS Developer (7545, 7556) 5-33

6. Transfer

PL 6.1 Transfer (1 of 2) 5-34
PL 6.2 Transfer (2 of 2) 5-35
PL 6.3 IBT Assembly (1 of 2) 5-36
PL 6.4 IBT Belt Unit (2 of 2) 5-37

7. Fuser

PL 7.1 Fuser 5-38

8. Xerographic

PL 8.1 Xerographic (1 of 2) 5-39
PL 8.2 Xerographic (2 of 2) 5-40

9. Paper Transport

PL 9.1 Tray 1/2 (1 of 2) 5-41
PL 9.2 Tray 1/2 (2 of 2) 5-42
PL 9.3 Tray 1 Feeder 5-43
PL 9.4 Tray 1 Feeder Assembly (1 of 2) 5-44
PL 9.5 Tray 1 Feeder Assembly (2 of 2) 5-45

10. 3TM

PL 10.1 Three Tray Module 5-46
PL 10.2 Tray 2, 3, 4 Assembly 5-47
PL 10.3 Tray 2 Feeder Assembly (1 of 2) 5-48
PL 10.4 Tray 2 Feeder Assembly (2 of 2) 5-49
PL 10.5 Tray 3 Feeder Assembly (1 of 2) 5-50
PL 10.6 Tray 3 Feeder Assembly (2 of 2) 5-51
PL 10.7 Tray 4 Feeder Assembly (1 of 2) 5-52
PL 10.8 Tray 4 Feeder Assembly (2 of 2) 5-53
PL 10.9 Electrical 5-54
PL 10.12 Roller 5-55
PL 10.13 Left Hand Cover Assembly 5-56
PL 10.14 Covers 5-57

11. Tandem Tray

PL 11.1 Tray 2/3/4 Assembly 5-58
PL 11.2 Tray 2 5-59
PL 11.3 Tray 3 5-60
PL 11.4 Tray 4 5-61
PL 11.5 Tray 4 Paper Feed 5-62
PL 11.6 Tray 2/3 Paper Feed 5-63
PL 11.7 Tray 2 Feeder (1 of 2) 5-64
PL 11.8 Tray 2 Feeder (2 of 2) 5-65
PL 11.9 Tray 3 Feeder (1 of 2) 5-66
PL 11.10 Tray 3 Feeder (2 of 2) 5-67
PL 11.11 Tray 4 Feeder (1 of 2) 5-68
PL 11.12 Tray 4 Feeder (2 of 2) 5-69
PL 11.13 Left Cover Assembly 5-70
PL 11.14 Tray Front Supports 5-71
PL 11.15 Tray 2/3/4 Paper and Lift Sensors 5-72
PL 11.16 Drive 5-73
PL 11.17 Electrical 5-74
PL 11.18 Covers 5-75

13. Paper Transport

PL 13.1 Bypass Tray Assembly (1 of 5) 5-76
PL 13.2 Bypass Tray Assembly (2 of 5) 5-77

PL 13.3 Bypass Tray Assembly (3 of 5) 5-78
PL 13.4 Bypass Tray Assembly (4 of 5) 5-79
PL 13.5 Bypass Tray Assembly (5 of 5) 5-80

14. Duplex

PL 14.1 Left Hand Cover (1 of 2) 5-81
PL 14.2 Left Hand Cover (2 of 2) 5-82
PL 14.3 Left Hand Cover Assembly (1 of 2) 5-83
PL 14.4 Left Hand Cover Assembly (2 of 2) 5-84
PL 14.5 Duplex Assembly (1 of 2) 5-85
PL 14.6 Duplex Assembly (2 of 2) 5-86

15. Registration

PL 15.1 Registration (1 of 2) 5-87
PL 15.2 Registration (2 of 2) 5-88

17. Exit

PL 17.1 Exit 1/OCT, Exit 2 5-89
PL 17.2 Exit 1/OCT 5-90
PL 17.3 Exit 2 (1 of 3) 5-91
PL 17.4 Exit 2 (2 of 3) 5-92
PL 17.5 Exit 2 (3 of 3) 5-93
PL 17.6 Side Tray Unit (1 of 2) 5-94
PL 17.7 Side Tray Unit (2 of 2) 5-95

18. Electrical

PL 18.1 PWB Chassis Unit (1 of 2) 5-96
PL 18.2A PWB Chassis Unit (7525, 7530, 7535) 5-97
PL 18.2B PWB Chassis Unit (7545, 7556) 5-98
PL 18.3 IOT Rear 5-99
PL 18.4 GFI Chassis 5-100
PL 18.5 Front/Right 5-101
PL 18.6A Bottom (7525, 7530, 7535) 5-102
PL 18.6B Bottom (7545, 7556) 5-103
PL 18.7 Wire Harness 5-104

19. IOT Covers

PL 19.1 Covers (1 of 3) 5-105
PL 19.2 Covers (2 of 3) 5-106
PL 19.3 Covers (3 of 3) 5-107

21. Professional Finisher

PL 21.1 Professional Finisher 5-108
PL 21.2 Finisher Cover (1 of 2) 5-109
PL 21.3 Finisher Cover (2 of 2) 5-110
PL 21.4 Finisher Stack 5-111
PL 21.5 Finisher Punch 5-112
PL 21.6 Finisher Stapler 5-113
PL 21.7 Finisher Eject (1 of 3) 5-114
PL 21.8 Finisher Eject (2 of 3) 5-115
PL 21.9 Finisher Eject (3 of 3) 5-116
PL 21.10 Finisher Transport (1 of 2) 5-117
PL 21.11 Finisher Transport (2 of 2) 5-118
PL 21.12 Finisher Electrical 5-119
PL 21.13 Finisher Harness 5-120
PL 21.15 Booklet Accessory 5-121
PL 21.16 Booklet Component (1 of 7) 5-122
PL 21.17 Booklet Component (2 of 7) (End Guide) 5-123
PL 21.18 Booklet Component (3 of 7) 5-124
PL 21.19 Booklet Component (4 of 7) 5-125
PL 21.20 Booklet Component (5 of 7) 5-126
PL 21.21 Booklet Component (6 of 7) (Chute) 5-127
PL 21.22 Booklet Component (7 of 7) 5-128
PL 21.23 Booklet Tray Component 5-129
PL 21.24 H-Transport (1 of 5) 5-130
PL 21.25 H-Transport (2 of 5) 5-131
PL 21.26 H-Transport (3 of 5) 5-132
PL 21.27 H-Transport (4 of 5) 5-133
PL 21.28 H-Transport (5 of 5) 5-134

22. Integrated Office Finisher

PL 22.1 Finisher Assembly (Part 1 of 2) (Integrated Office Finisher) 5-135
PL 22.2 Finisher Assembly (Part 2 of 2) (Integrated Office Finisher) 5-136
PL 22.3 Stacker Base Assembly (Part 1 of 5) (Integrated Office Finisher) 5-137
PL 22.4 Stacker Base Assembly (Part 2 of 5) (Integrated Office Finisher) 5-138
PL 22.5 Stacker Base Assembly (Part 3 of 5) (Integrated Office Finisher) 5-139
PL 22.6 Stacker Base Assembly (Part 4 of 5) (Integrated Office Finisher) 5-140
PL 22.7 Stacker Base Assembly (Part 5 of 5) (Integrated Office Finisher) 5-141
PL 22.8 Stacker Tray Assembly (Integrated Office Finisher) 5-142
PL 22.9 Compile Assembly (Part 1 of 2) (Integrated Office Finisher) 5-143
PL 22.10 Compile Assembly (Part 2 of 2) (Integrated Office Finisher) 5-144

23. Office Finisher LX

PL 23.1 H-Transport Assembly (1 of 5) (Office Finisher LX) 5-145
PL 23.2 H - Transport Assembly (2 of 5) (Office Finisher LX) 5-146
PL 23.3 H - Transport Assembly (3 of 5) (Office Finisher LX) 5-147
PL 23.4 H - Transport Assembly (4 of 5) (Office Finisher LX) 5-148
PL 23.5 H - Transport Assembly (5 of 5) (Office Finisher LX) 5-149
PL 23.6 Finisher Covers (Office Finisher LX) 5-150
PL 23.7 Finisher Stacker (Office Finisher LX) 5-151
PL 23.8 Finisher Stapler (Office Finisher LX) 5-152
PL 23.9 Finisher Eject (1 of 5) (Office Finisher LX) 5-153
PL 23.10 Finisher Eject (2 of 5) (Office Finisher LX) 5-154
PL 23.11 Finisher Eject (3 of 5) (Office Finisher LX) 5-155
PL 23.12 Finisher Eject (4 of 5) (Office Finisher LX) 5-156
PL 23.13 Finisher Eject (5 of 5) (Office Finisher LX) 5-157
PL 23.14 Finisher Exit/Folder Assembly (Office Finisher LX) 5-158
PL 23.15 Folder Assembly (Office Finisher LX) 5-159
PL 23.16 Finisher Electrical (Office Finisher LX) 5-160
PL 23.17 Booklet Cover (Office Finisher LX) 5-161
PL 23.18 Booklet Stapler Assembly (Office Finisher LX) 5-162
PL 23.19 Booklet Front Stapler Assembly (Office Finisher LX) 5-163
PL 23.20 Booklet Rear Stapler Assembly (Office Finisher LX) 5-164
PL 23.21 Booklet Electrical (Office Finisher LX) 5-165

28. HCF

PL 28.1 HCF Unit 5-166
PL 28.2 HCF Tray 6 (1 of 2) 5-167
PL 28.3 HCF Tray 6 (2 of 2) 5-168
PL 28.4 HCF Feeder (1 of 3) 5-169
PL 28.5 HCF Feeder (2 of 3) 5-170
PL 28.6 HCF Feeder (3 of 3) 5-171
PL 28.7 HCF Top Cover Unit 5-172
PL 28.8 HCF Electrical and Rail 5-173

35. SBC

PL 35.1 Single Board Controller (1 of 2) 5-174
PL 35.2 Single Board Controller (2 of 2) 5-175

51. DADF

PL 51.1 DADF Accessory 5-176
PL 51.2 Covers, PWB 5-177
PL 51.3 Base Frame 5-178
PL 51.4 Document Tray 5-179
PL 51.5 DADF Drives (1 of 2) 5-180
PL 51.6 DADF Drives (2 of 2) 5-181
PL 51.7 Front Belt 5-182
PL 51.8 Registration, Retard, Invert, Output Chutes 5-183
PL 51.9 Roll, Sensor Bracket 5-184
PL 51.10 Document Tray 5-185
PL 51.11 Top Cover 5-186
PL 51.12 Upper Feeder 5-187
PL 51.13 Registration Chute 5-188
PL 51.14 Retard Chute 5-189
PL 51.15 Invert Chute 5-190
PL 51.16 Output Chute 5-191
PL 51.17 Sensor Bracket 5-192

Common Hardware

Common Hardware 5-193

Introduction

Overview

The Parts List section identifies all part numbers and the corresponding location of all spared subsystem components.

Organization

Parts Lists

Each item number in the part number listing corresponds to an item number in the related illustration. All the parts in a given subsystem of the machine will be located in the same illustration or in a series of associated illustrations.

Electrical Connectors and Fasteners

This section contains the illustrations and descriptions of the plugs, jacks, and fasteners used in the machine. A part number listing of the connectors is included.

Common Hardware

The common hardware is listed in alphabetical order by the letter or letters used to identify each item in the part number listing and in the illustrations. Dimensions are in millimeters unless otherwise identified.

Part Number Index

This index lists all the spared parts in the machine in numerical order. Each number is followed by a reference to the parts list on which the part may be found.

Other Information

Abbreviations

Abbreviations are used in the parts lists and the exploded view illustrations to provide information in a limited amount of space. The following abbreviations are used in this manual:

Table 1 Abbreviations

Abbreviation	Meaning
A3	297 x 594 Millimeters
A4	210 x 297 Millimeters
A5	148 x 210 Millimeters
AD	Auto Duplex
AWG	American Wire Gauge
EMI	Electro Magnetic Induction
GB	Giga Byte
KB	Kilo Byte
MB	Mega Byte
MM	Millimeters
MOD	Magneto Optical Drive
NOHAD	Noise Ozone Heat Air Dirt
PL	Parts List
P/O	Part of

Table 1 Abbreviations

Abbreviation	Meaning
R/E	Reduction/Enlargement
REF:	Refer to
SCSI	Small Computer Systems Interface
W/	With
W/O	Without

Table 2 OP Cos

	Operating Companies
Abbreviation	**Meaning**
AO	Americas Operations
NASG - US	North American Solutions Group - US
NASG - Canada	North American Solutions Group - Canada
XE	Xerox Europe

Symbology

Symbology used in the Parts List section is identified in the Symbology section.

Service Procedure Referencing

If a part or assembly has an associated repair or adjustment procedure, the procedure number will be listed at the end of the part description in the parts lists e.g. (REP 5.1, ADJ 5.3)

Subsystem Information

Use of the Term “Assembly”

The term “assembly” will be used for items in the part number listing that include other itemized parts in the part number listing. When the word “assembly” is found in the part number listing, there will be a corresponding item number on the illustrations followed by a bracket and a listing of the contents of the assembly.

Brackets

A bracket is used when an assembly or kit is spared, but is not shown in the illustration. The item number of the assembly or kit precedes the bracket; the item numbers of the piece parts follow the bracket.

Tag

The notation “W/Tag” in the parts description indicates that the part configuration has been updated. Check the change Tag index in the General Information section of the Service Data for the name and purpose of the modification.

In some cases, a part or assembly may be spared in two versions: with the Tag and without the Tag. In those cases, use whichever part is appropriate for the configuration of the machine on which the part is to be installed. If the machine does not have a particular Tag and the only replacement part available is listed as “W/Tag”, install the Tag kit or all of the piece parts. The Change Tag Index tells you which kit or piece parts you need.

Whenever you install a Tag kit or all the piece parts that make up a Tag, mark the appropriate number on the Tag matrix.

Symbology

A Tag number within a circle pointing to an item number shows that the part has been changed by the tag number within the circle (Figure 1). Information on the modification is in the Change Tag Index.

A Tag number within a circle having a shaded bar and pointing to an item number shows that the configuration of the part shown is the configuration before the part was changed by the Tag number within the circle (Figure 2).

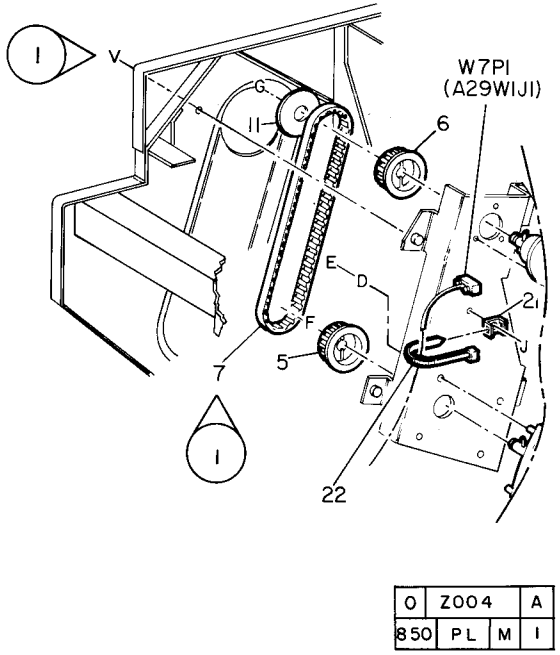

Figure 1 With Tag Symbol

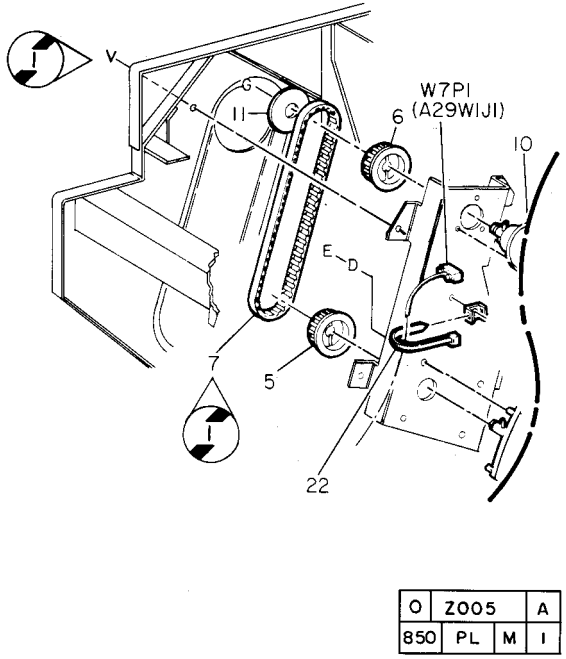

Figure 2 Without Tag Symbol

A tag number within a circle with no apex shows that the entire drawing has been changed by the tag number within the circle (Figure 3). Information on the modification is in the Change Tag Index.

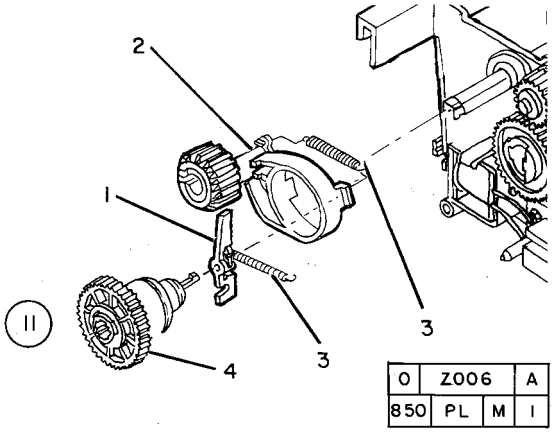

Figure 3 Entire Drawing With Tag Symbol

A tag number within a circle with no apex and having a shaded bar shows that the entire drawing was the configuration before being changed by the tag number within the circle (Figure 4).

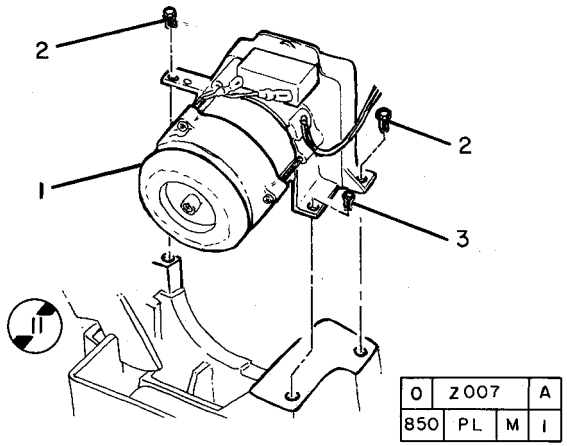

Figure 4 Entire Drawing Without Tag Symbol

PL 1.1 Platen/IIT Cover

Item	Part	Description
1	–	DADF Assembly (REF: PL 51.1)
2	802E63030	Blind Cover (White)
3	848E43570	Blind Cover (Blue)
4	826E49690	Screw (Black)
5	–	IIT Right Cover (Not Spared)
6	848E43490	IIT Left Cover
7	848E43550	IIT Top Cover
–	848E40510	IIT Top Cover
8	–	Blind Cover (Not Spared)
9	–	Label (Caution) (Not Spared)
10	–	Label (Not Spared)
11	848K34530	IIT Rear Cover Assembly
12	053K92890	Filter
13	–	Tag Matrix Label (Not Spared)

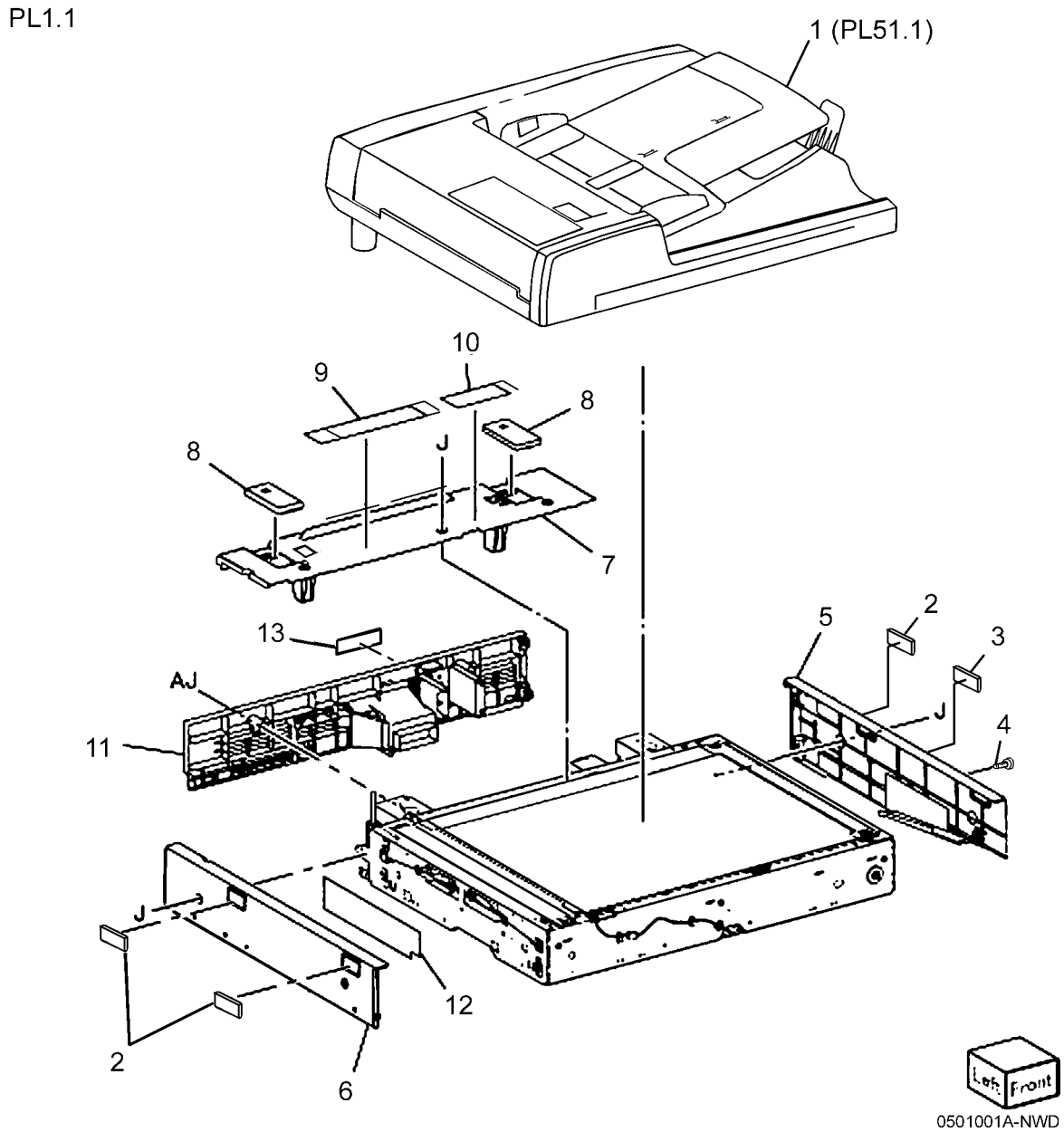

PL 1.2 Control Panel/Platen Glass

Item	Part	Description
1	–	Control Panel (REF: PL 1.2 Item 1) (REP 6.3)
2	868E04891	Glass Support
3	090K93250	Platen Glass (REP 6.2)
4	815E40270	Plate
5	868E04450	Rear Glass Support
6	090K93011	CVT Platen Glass
7	868E04530	Front Glass Support
8	962K73341	UI Cable
9	849E14161	Bracket
10	835E24500	Seal (Right)
11	835E24530	Seal (Left)
12	835E24540	Seal (Center)
13	604K83600	Machine Label Kit (7525, 7530, 7535, 7545, 7556 Labels)
14	962K83261	USB Cable (W/O TAG P-002)
15	962K93360	USB Cable (W/[TAG T-002])

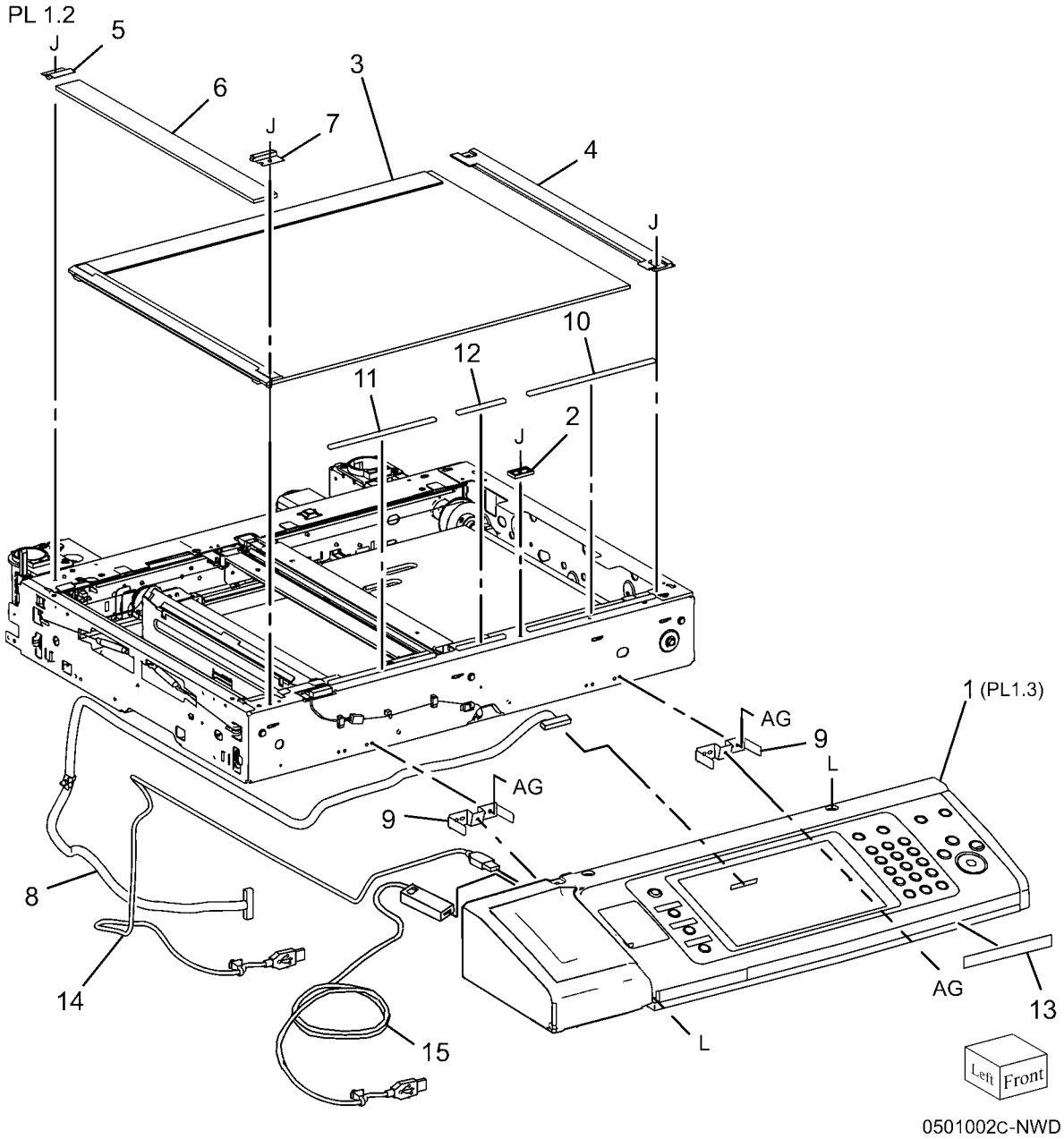

PL 1.3 Control Panel (1 of 2)

Item	Part	Description
1	848K45276	Console Assembly (XE) (W/O TAG P-002)
–	848K45206	Console Assembly (XC) (W/O TAG P-002)
–	848K45200	Console Assembly (XC) (W/O TAG P-002)
–	848K59990	Console Assembly (XE) (W/TAG P-002)
–	848K59980	Console Assembly (XC) (W/TAG P-002)
2	–	Outer Cover (P/O PL 1.3 Item 1)
3	–	Console (P/O PL 1.3 Item 1)
4	–	Stylus Pen (P/O PL 1.3 Item 1)
5	848E55911	Overlay Cover Assembly (XC)
–	848E60171	Overlay Cover Assembly (XE)
6	–	Overlay Cover (P/O PL 1.3 Item 5)
7	–	LED Lens (P/O PL 1.3 Item 5)
8	848E55540	USB Cap
–	848E55551	USB Cover
9	848K43641	Touch Panel Cover (XC)
–	848K45311	Touch Panel Cover (XE)
10	848E39872	Clip Holder Cover
11	676K00140	French UI Overlay

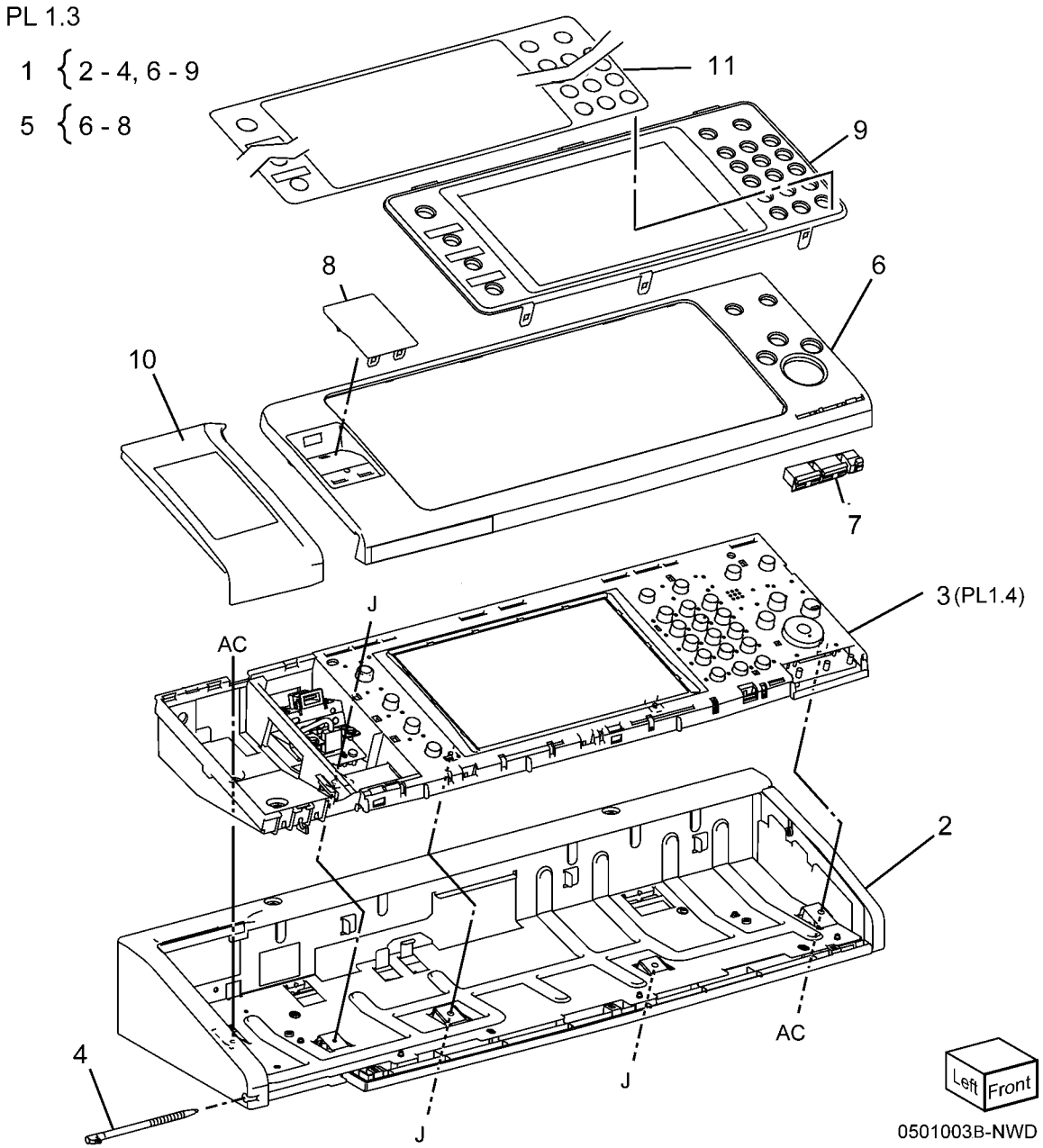

PL 1.4 Control Panel (2 of 2)

Item	Part	Description
1	–	Housing (Not Spared)
2	–	LCD Bracket (Not Spared)
3	–	UI I/F PWB (Not Spared)
4	–	UI Wire Harness (Not Spared)
5	–	UI Flexible Print Cable (Not Spared)
6	–	UI Function PWB (Not Spared)
7	–	UI 10 Key PWB (Not Spared)
8	–	UI Flexible Print Cable (Not Spared)
9	–	Shield Bracket (Not Spared)
10	–	Screw (Not Spared)
11	–	UI Flexible Print Cable (Not Spared)
12	–	UI Flexible Print Cable (Not Spared)
13	–	Clamp (Not Spared)
14	815K04451	Inverter
15	123K98800	Display
16	068K66251	USB Connector (W/O TAG P-002)
17	–	Plate (Not Spared)
18	–	USB Bracket (P/O PL 1.3 Item 1) (W/TAG P-002)

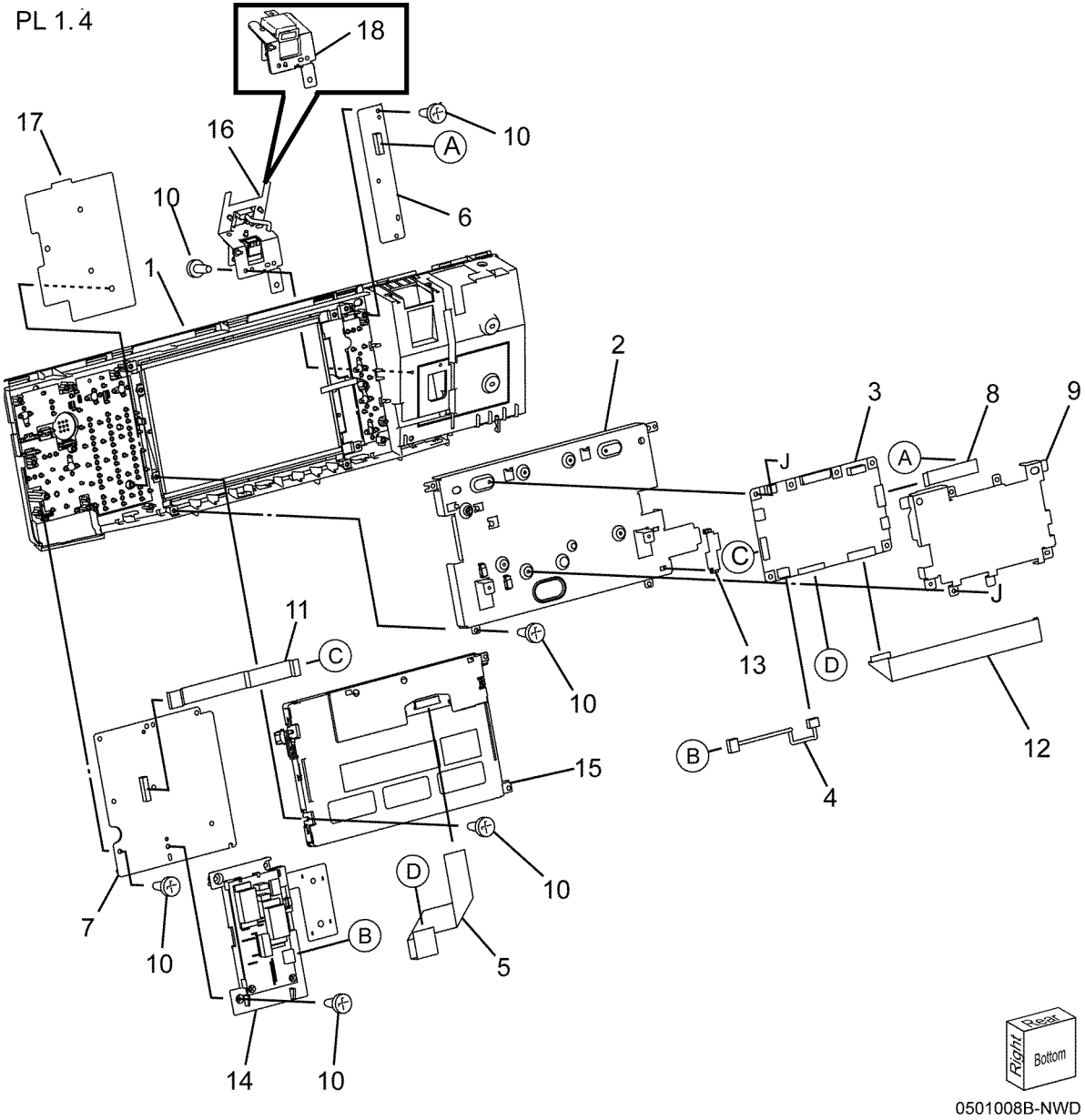

PL 1.5 CCD Lens Assembly

Item	Part	Description
1	–	Lens Cover (Not Spared)
2	826E11600	Screw
3	826E08780	Screw (Blue)
4	130K73140	APS Sensor Assembly
5	130K64150	APS Sensor
6	–	Bracket (P/O PL 1.5 Item 4)
7	604K56041	CCD Lens Assembly (7525, 7530, 7535)
–	604K56050	CCD Lens Assembly (7545, 7556)
8	117K47560	FCC Flat Cable
9	110K11960	Platen Interlock Switch
10	120K92541	Actuator Assembly
11	130E87280	Platen Angle Sensor
12	–	Wire Harness (Not Spared)

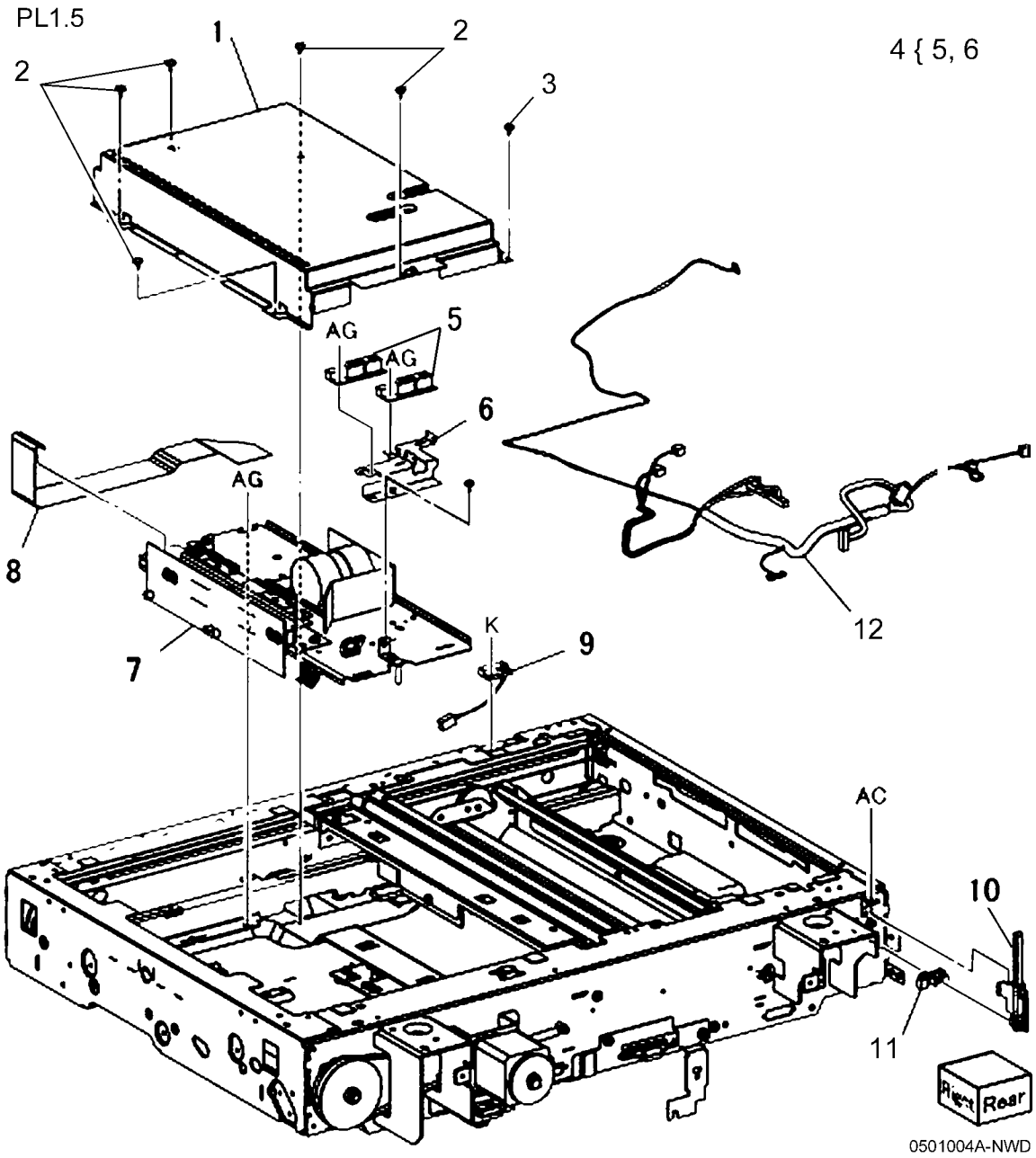

PL 1.6 Carriage Cable/Motor

Item	Part	Description
1	127K49532	Carriage Motor (REP 6.6)
2	809E76950	Spring
3	020E37030	Pulley
4	023E26430	Belt
5	063E97330	Tape
6	–	Tape (Not Spared)
7	012K94410	Front Carriage Cable (REP 6.7)
8	012K94420	Rear Carriage Cable (REP 6.7)
9	413W91850	Bearing
10	020E45300	Capstan Pulley
11	006K86470	Capstan Shaft
12	809E76840	Spring
13	130E87280	IIT Registration Sensor
14	019E70051	Holder
15	–	Sensor Bracket (P/O PL 1.6 Item 17)
16	–	Tube (Not Spared)
17	130K76201	IIT Registration Sensor And Bracket

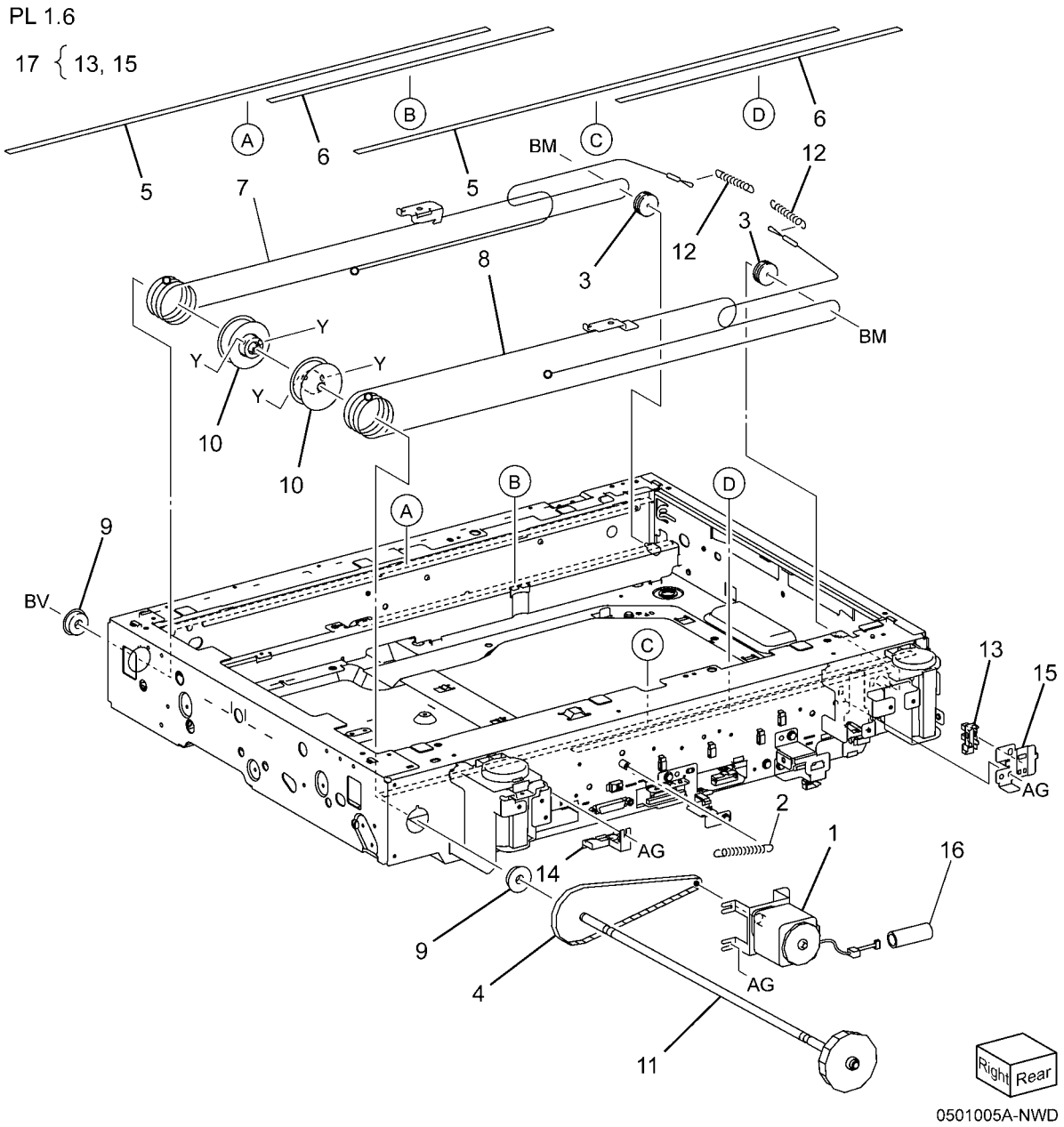

PL 1.7 Full/Half Rate Carriage

Item	Part	Description
1	041K96160	Full Rate Carriage (ADJ 6.2)
2	019E70080	Clip
3	–	No. 1 Mirror (P/O PL 1.7 Item 1)
4	–	Harness Guide (P/O PL 1.7 Item 1)
5	–	Harness Guide (P/O PL 1.7 Item 1)
6	–	Full Rate Carriage (P/O PL 1.7 Item 1)
7	–	Light Guide (P/O PL 1.7 Item 1) (REP 6.11)
8	–	Front Clip (P/O PL 1.7 Item 1)
9	–	Rear Clip (P/O PL 1.7 Item 1)
10	–	Bracket (P/O PL 1.7 Item 13)
11	960K49790	LED Lamp PWB (REP 6.9)
12	117E30981	LED Lamp Wire Harness (REP 6.10)
13	122K94340	LED Lamp
14	041K95910	Half Rate Carriage (ADJ 6.1)
15	–	No. 2/3 Mirror (P/O PL 1.7 Item 14)
16	–	Harness Guide (P/O PL 1.7 Item 14)
17	020E37030	Pulley
18	–	Pulley (P/O PL 1.7 Item 14)
19	–	Carriage Frame (P/O PL 1.7 Item 14)

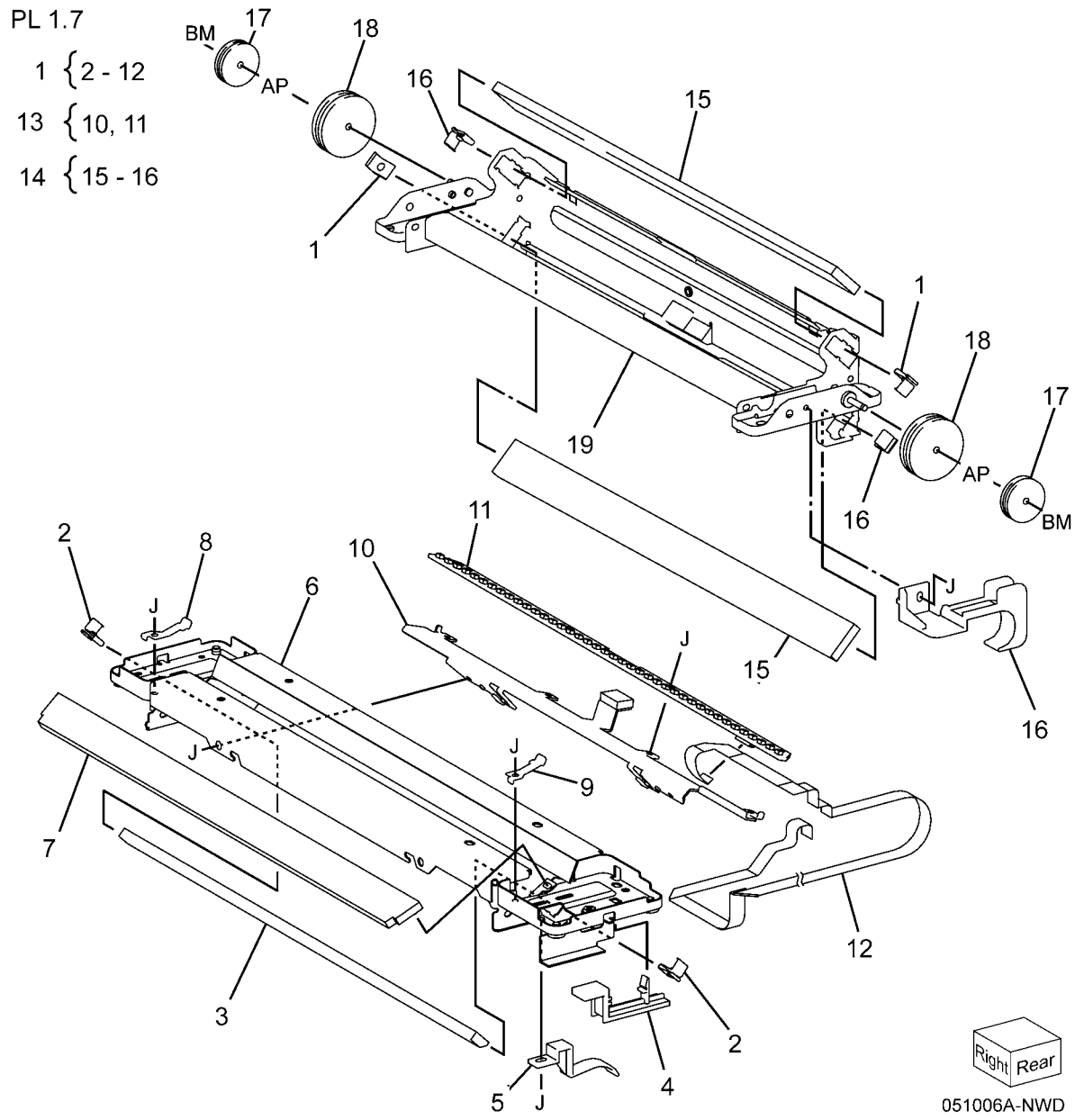

PL 1.8 IIT/IPS PWB

Item	Part	Description
1	–	PWB Cover (Not Spared)
2	237W00178	Lock Screw
3	960K49310	IIT PWB Assembly (REP 6.12)
4	868E40510	Harness Bracket
5	826E11600	Screw
6	–	Conductor (Not Spared)

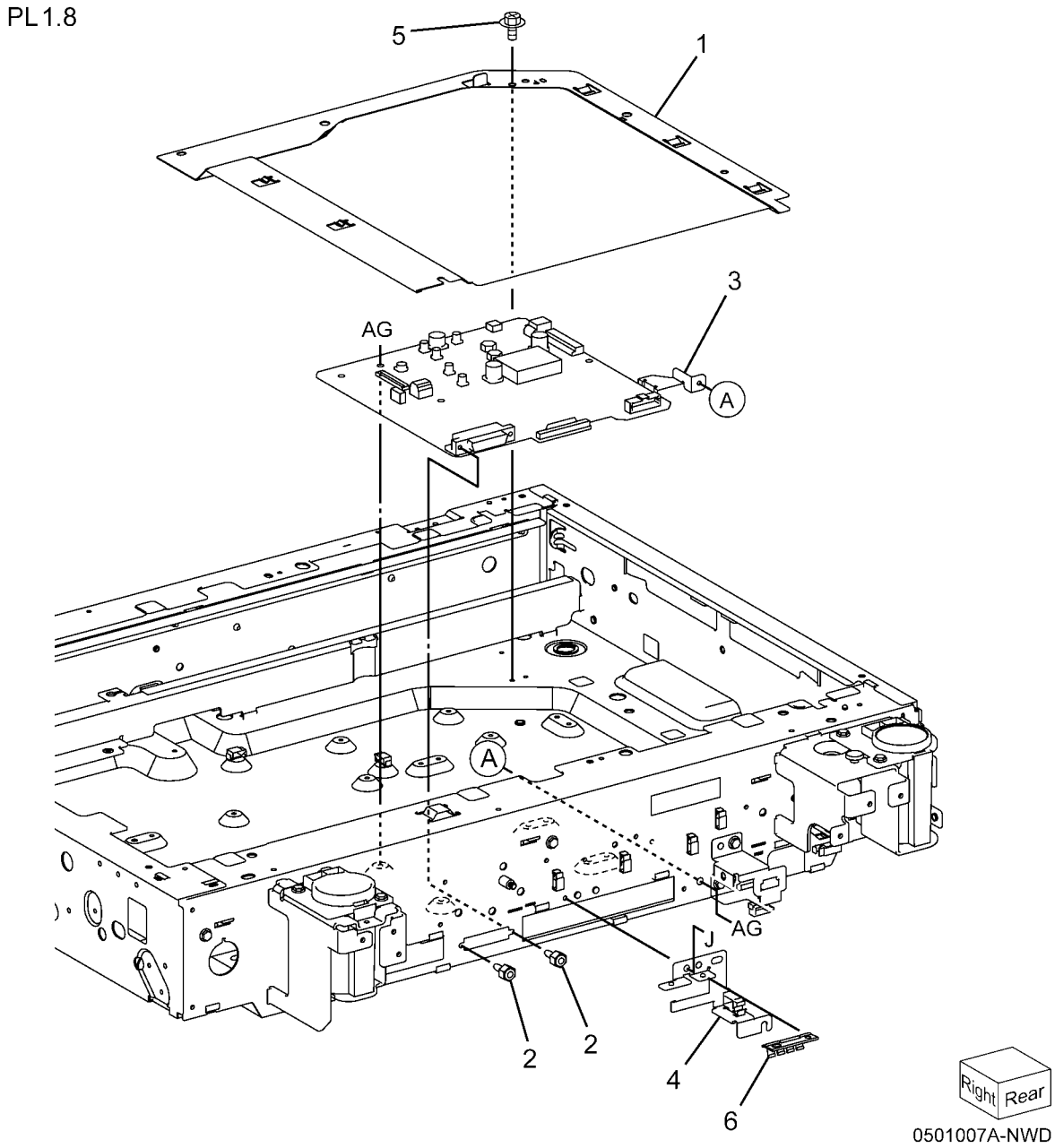

PL 1.9 Convenience Stapler

Item	Part	Description
1	604K35710	Convenience Stapler (110V)
–	604K35700	Convenience Stapler (220V)

PL 1.9

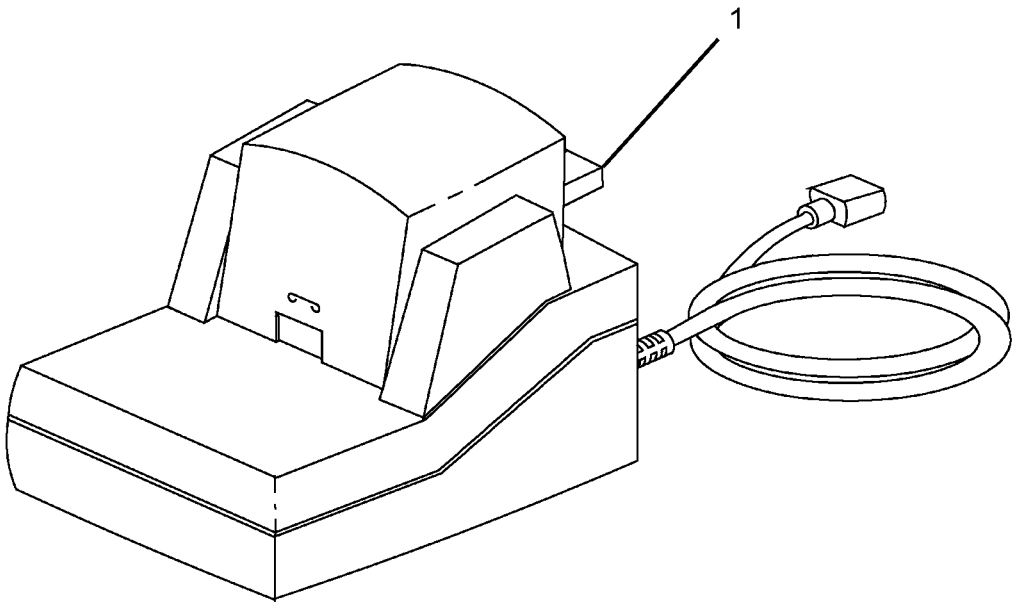

0501009A-NWD

PL 2.1 LED Print Head (1 of 2)

Item	Part	Description
1	019K12490	Rear Holder Assembly
2	130K78680	LED Print Head Assembly (REP 9.10)
–	130K78690	LED Print Head Assembly (REP 9.10)
3	–	Guide (P/O PL 2.1 Item 2)
4	042K93520	LED Print Head Cleaner
5	107K92162	LED Print Head
6	011K98621	Drum Cover

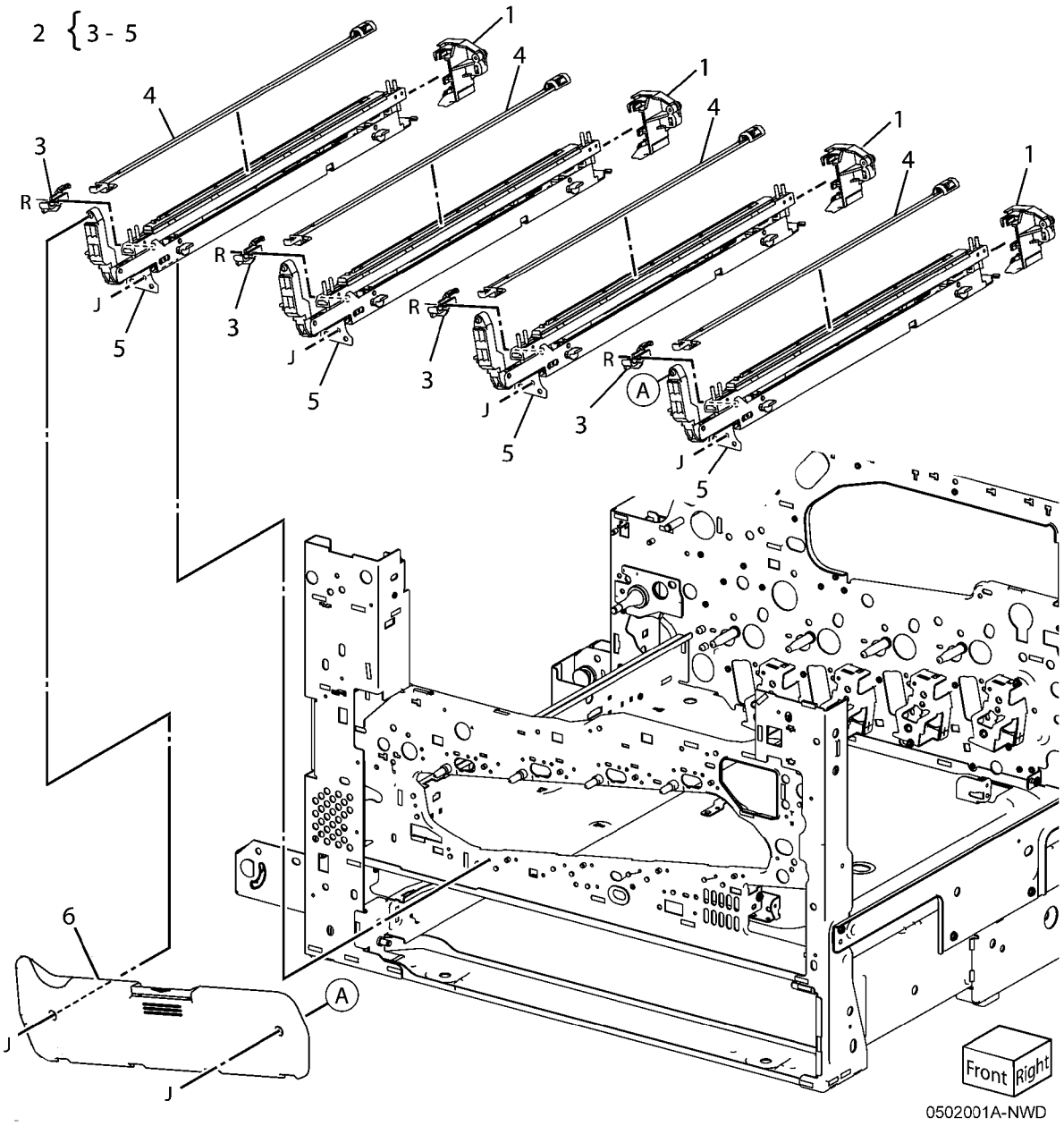

PL 2.2 LED Print Head (2 of 2)

Item	Part	Description
1	962K77431	LED Print Head Cable Assembly (REP 9.11, REP 9.12)
2	868E07741	Cable Holder
3	868E14670	Cable Holder
4	868E07730	Cable Holder
5	960K36952	LED Print Head Rear PWB

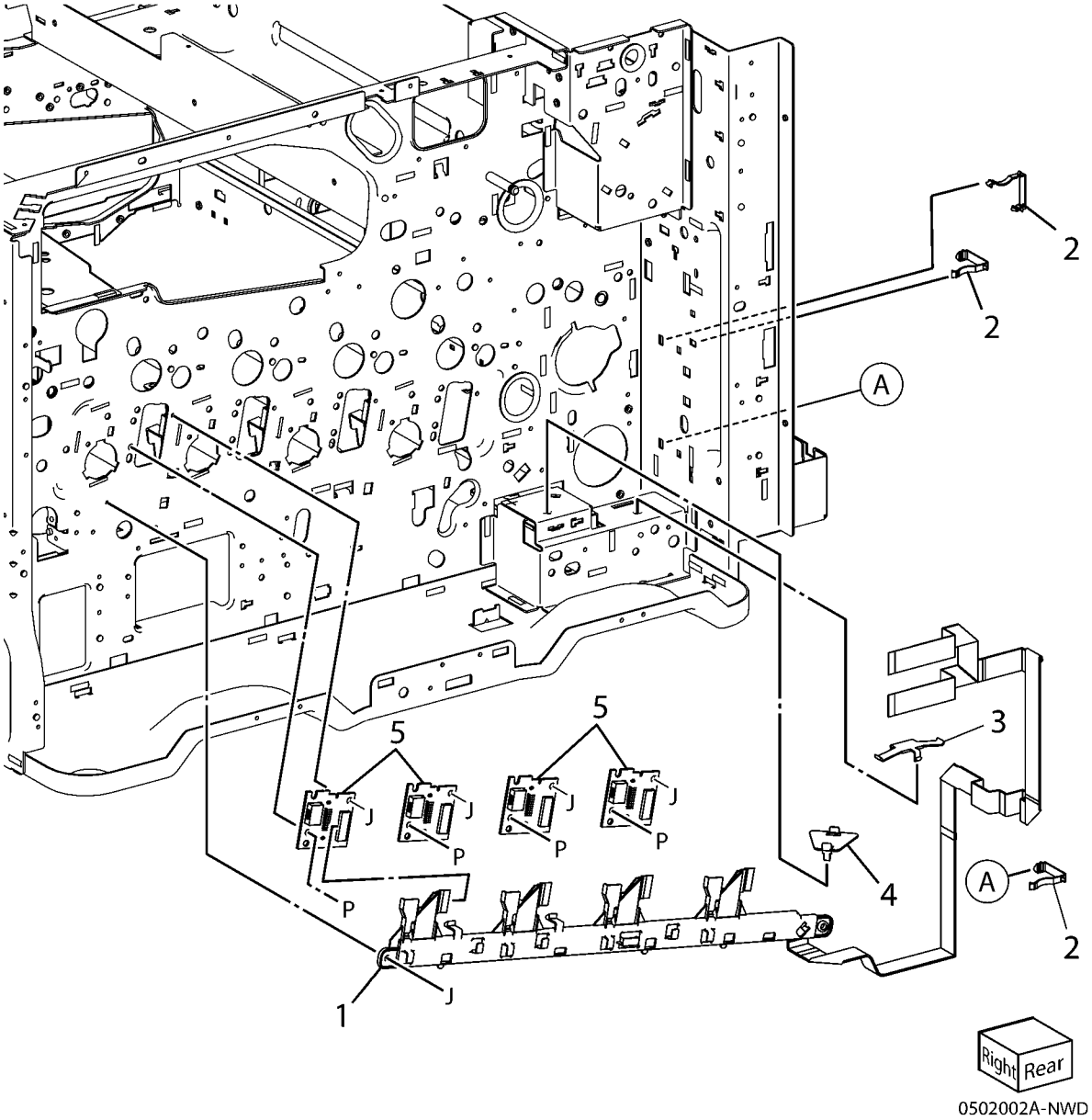

PL 3.1 Drives (1 of 4)

Item	Part	Description
1	068K69160	Fuser Input Bracket Assembly (7545, 7556)
–	068K64901	Fuser Input Bracket Assembly (7525, 7530, 7535)
2	–	Helical Gear (26T) (P/O PL 3.1 Item 1)
3	–	Fuser Shaft (P/O PL 3.1 Item 1)
4	–	Fuser Input Bracket (P/O PL 3.1 Item 1)
5	–	Helical Gear (25T) (P/O PL 3.1 Item 1)
6	809E74960	Spring
7	012E15930	Fuser Link
8	809E74950	Spring
9	007K16851	Fuser Drive Motor Assembly (7525, 7530, 7535)
–	007K16861	Fuser Drive Motor Assembly (7545, 7556)
10	–	Fuser Drive Motor (P/O PL 3.1 Item 9) (7545, 7556)
–	127K64390	Fuser Drive Motor (7525, 7530, 7535)
11	–	Gear Bracket Assembly (P/O PL 3.1 Item 9)
12	807E19830	Helical Gear (40T/23T)
13	005E26140	Flange
14	423W10355	Belt
15	–	Bearing (P/O PL 3.1 Item 1)
16	–	Bearing (P/O PL 3.1 Item 1)

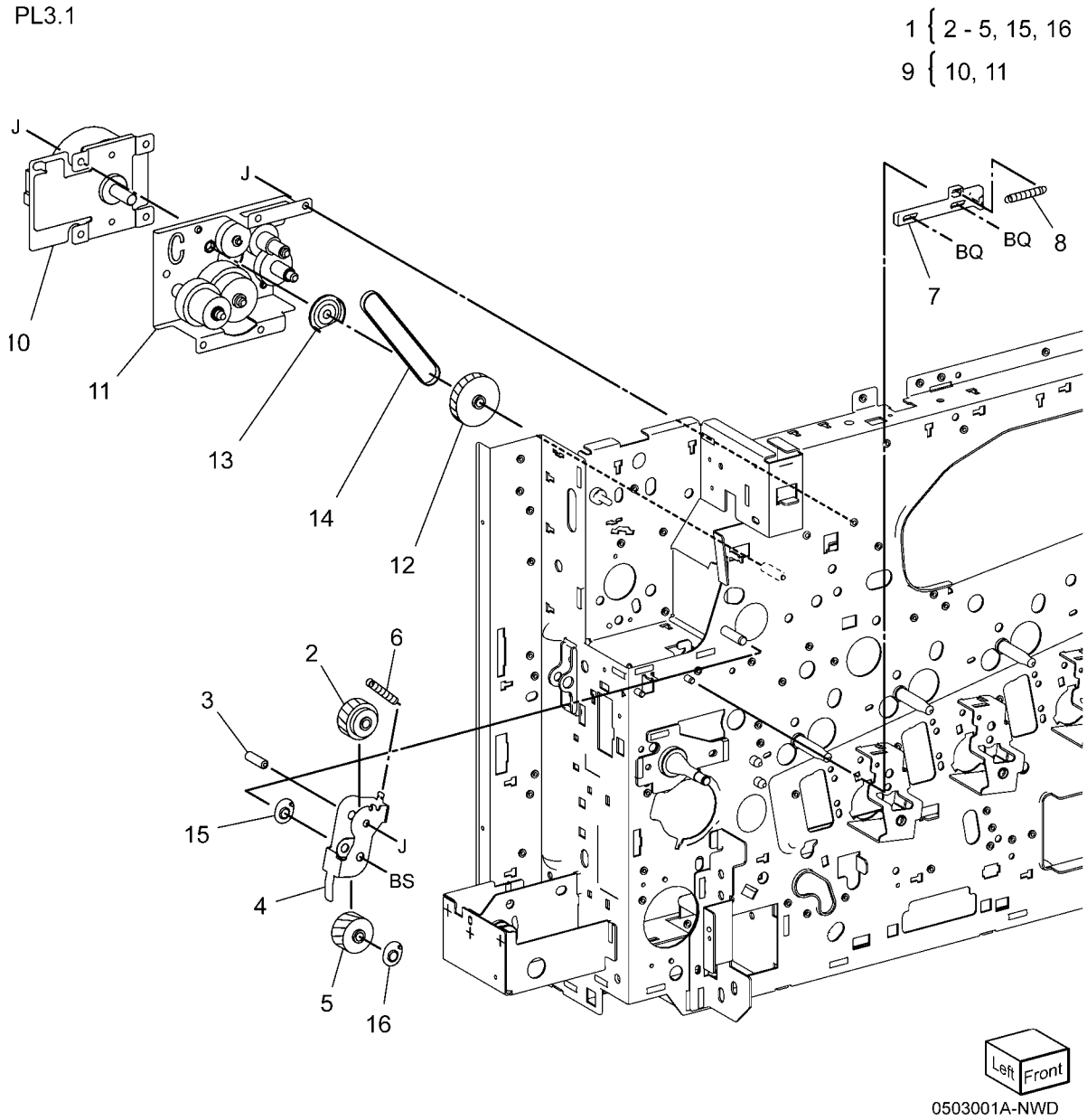

PL 3.2 Drives (2 of 4)

Item	Part	Description
1	007K16831	Main Drive Assembly (7525, 7530, 7535) (REP 4.1)
2	–	Bracket (P/O PL 3.2 Item 1)
3	127K64390	Main Drive Motor Assembly (7525, 7530, 7535)
4	007K98090	Retract Drive Assembly
5	–	Retract Bracket Assembly (P/O PL 3.2 Item 4)
6	–	Retract Lower Bracket (P/O PL 3.2 Item 4)
7	–	Retract Shaft (P/O PL 3.2 Item 4)
8	–	Clutch Shaft (P/O PL 3.2 Item 4)
9	–	Helical Gear (45T/23T) (P/O PL 3.2 Item 4)
10	–	Helical Gear (36T) (P/O PL 3.2 Item 4)
11	–	Helical Gear (21T) (P/O PL 3.2 Item 4)
12	121K40850	1st BTR Contact Retract Clutch
13	005E24620	Coupling
14	–	Retainer (P/O PL 3.2 Item 4)
15	–	Cam Wheel (P/O PL 3.2 Item 4)
16	–	Spring (P/O PL 3.2 Item 4)
17	930W00111	1st BTR Contact Retract Sensor
18	413W14660	Sleeve Bearing
19	–	Sleeve Bearing (P/O PL 3.2 Item 4)
20	–	Connector (P/O PL 3.2 Item 4)
21	–	Harness Holder (P/O PL 3.2 Item 4)
22	–	Harness Holder (P/O PL 3.2 Item 4)
23	007K16841	Main Drive Assembly (7545, 7556)
24	–	Main Motor (P/O PL 3.2 Item 23) (7545, 7556)
25	–	Bracket (P/O PL 3.2 Item 23) (7545, 7556)
26	127K64440	Main Drive Motor (7545, 7556)
27	–	Helical Gear (P/O PL 3.2 Item 23) (7545, 7556)

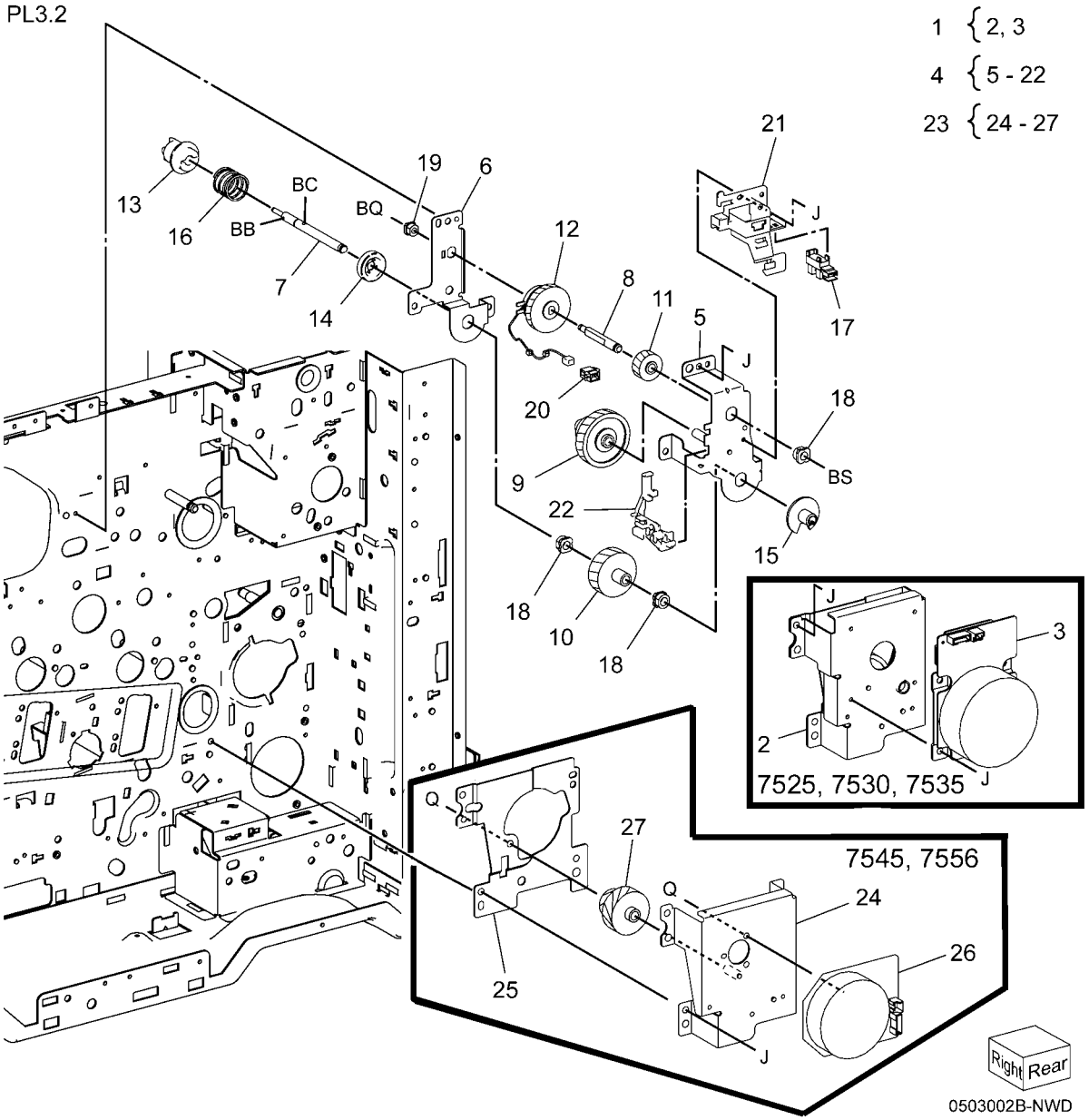

PL 3.3A Drives (7525/7530/7535)(3 of 4)

Item	Part	Description
1	007K16813	Drum/Developer Drive Assembly (REP 4.1)
2	–	Drive Assembly (P/O PL 3.3A Item 1)
3	127K64370	Drum/Developer Drive Motor (K)
4	127K64380	IBT Drive Motor Assembly
5	127K53121	Drum/Developer Driver Motor (Y, M, C)
6	055E56040	Gear Guide

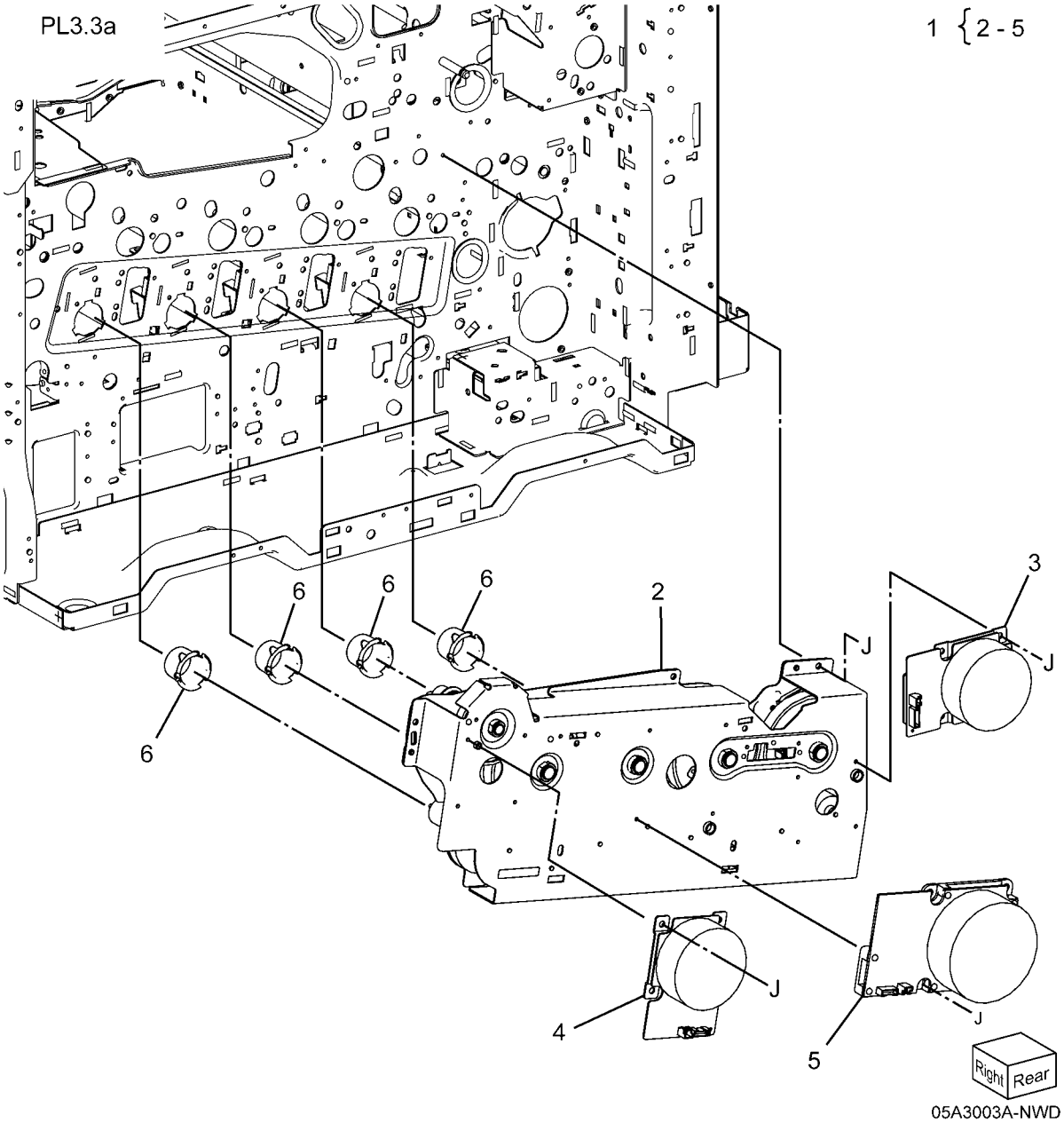

PL 3.3B Drives (7545/7556)(4 of 4)

Item	Part	Description
1	007K16824	Drum/Developer Drive Assembly (REP 4.2)
2	–	Drive Assembly (P/O PL 3.3B Item 1)
3	–	Developer Drive Motor (Y, M, C) / Drum /Developer Drive Motor (K) (P/O PL 3.3B Item 1)
4	–	IBT Drive Motor (P/O PL 3.3B Item 1)
5	–	Drum Drive Motor (Y, M, C) (P/O PL 3.3B Item 1)
6	055E56040	Gear Guide

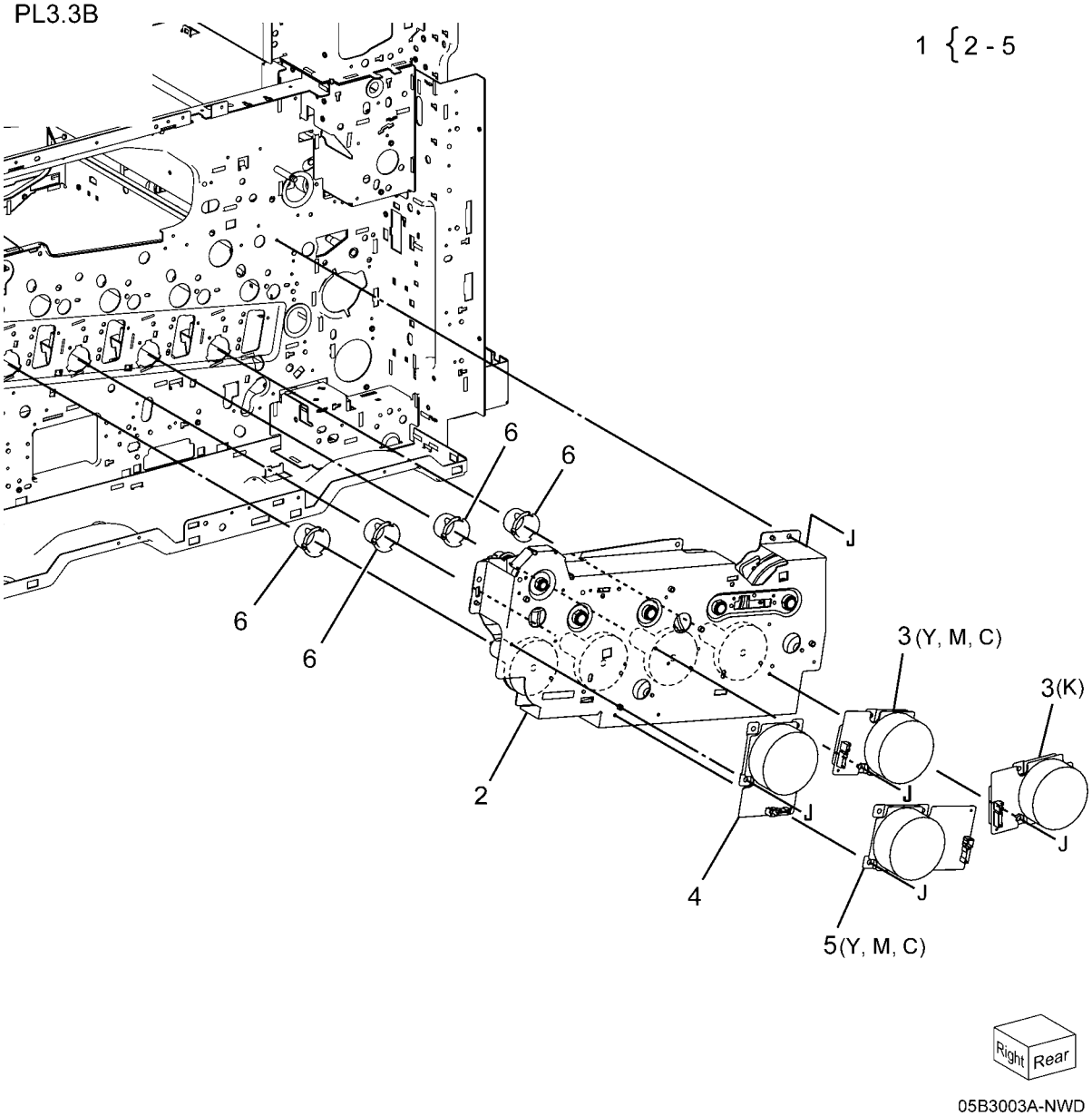

PL 4.1 NOHAD Common

Item	Part	Description
1	054K41420	Fuser Fan And Duct
2	–	Duct (P/O PL 4.1 Item 1)
3	–	Duct (P/O PL 4.1 Item 1)
4	–	Fuser Fan (P/O PL 4.1 Item 1)
5	913W13170	Connector
6	–	LVPS Duct (Not Spared)
7	127K58360	Front LVPS Fan
8	–	Plate (Not Spared)
9	054K34530	Filter Duct Assembly
10	–	Filter Duct (P/O PL 4.1 Item 9)
11	–	Seal (P/O PL 4.1 Item 9)
12	054K41490	IH Intake Fan And Duct
13	–	Duct (P/O PL 4.1 Item 12)
14	127K64480	IH Intake Fan

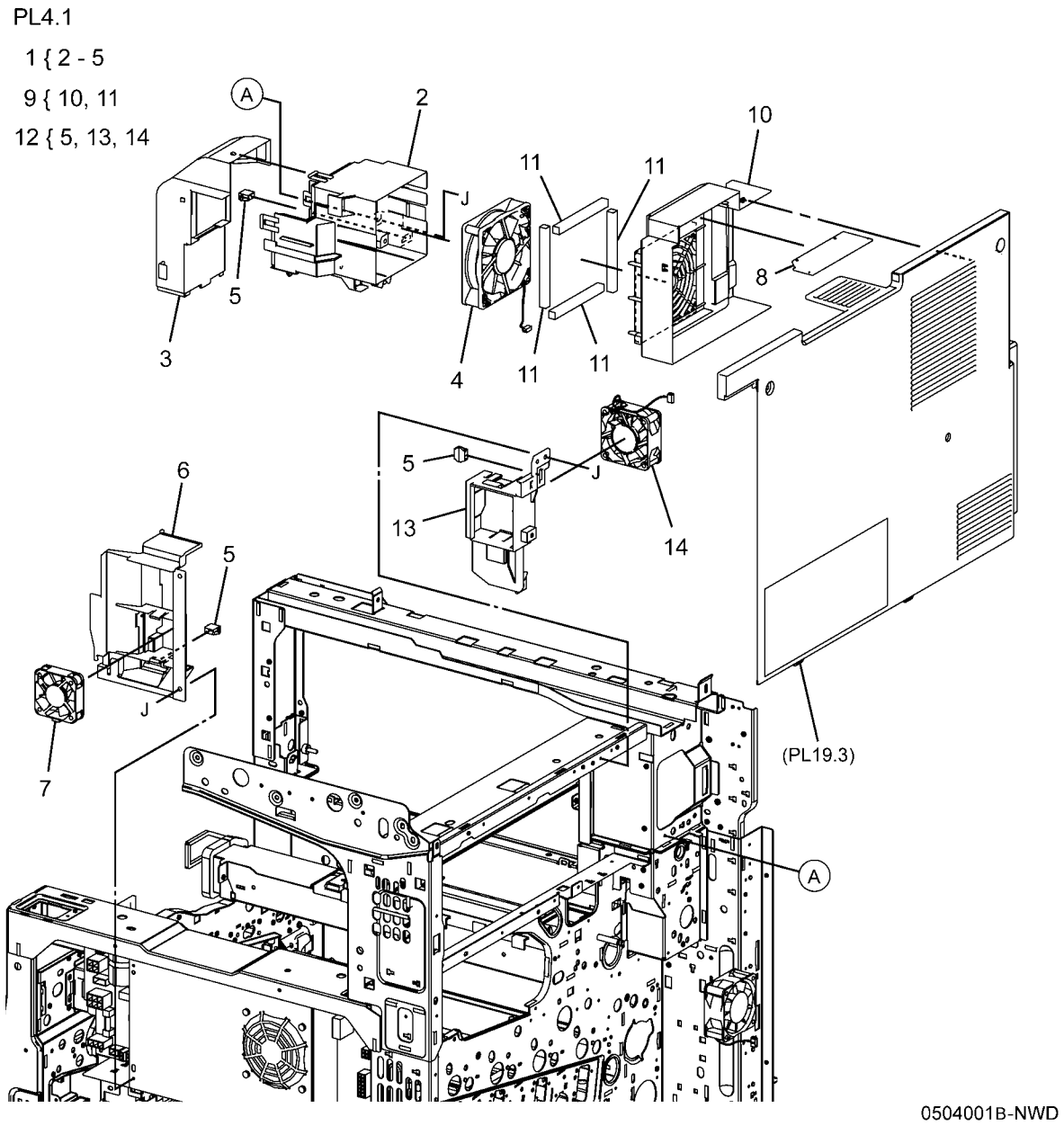

PL 4.2A NOHAD (7525, 7530, 7535)(1 of 3)

Item	Part	Description
1	054K36310	Center Duct
2	054K34542	IBT Fan And Duct Assembly
3	–	IBT Duct (P/O PL 4.2A Item 2)
4	927W00314	IBT Fan
5	–	Screw (P/O PL 4.2A Item 2)
6	–	Front Seal (P/O PL 4.2A Item 2)
7	913W13170	Connector
8	–	Seal (P/O PL 4.2A Item 2)
9	–	Fan Harness (P/O PL 4.2A Item 2)
10	–	Clamp (P/O PL 4.2A Item 2)
11	054K40410	Process 2 Fan And Duct
12	–	P2 Duct (P/O PL 4.2A Item 11)
13	927W00214	Process 2 Fan
14	054E36160	P1 Duct
15	815E51940	Plate
16	815K02170	Plate

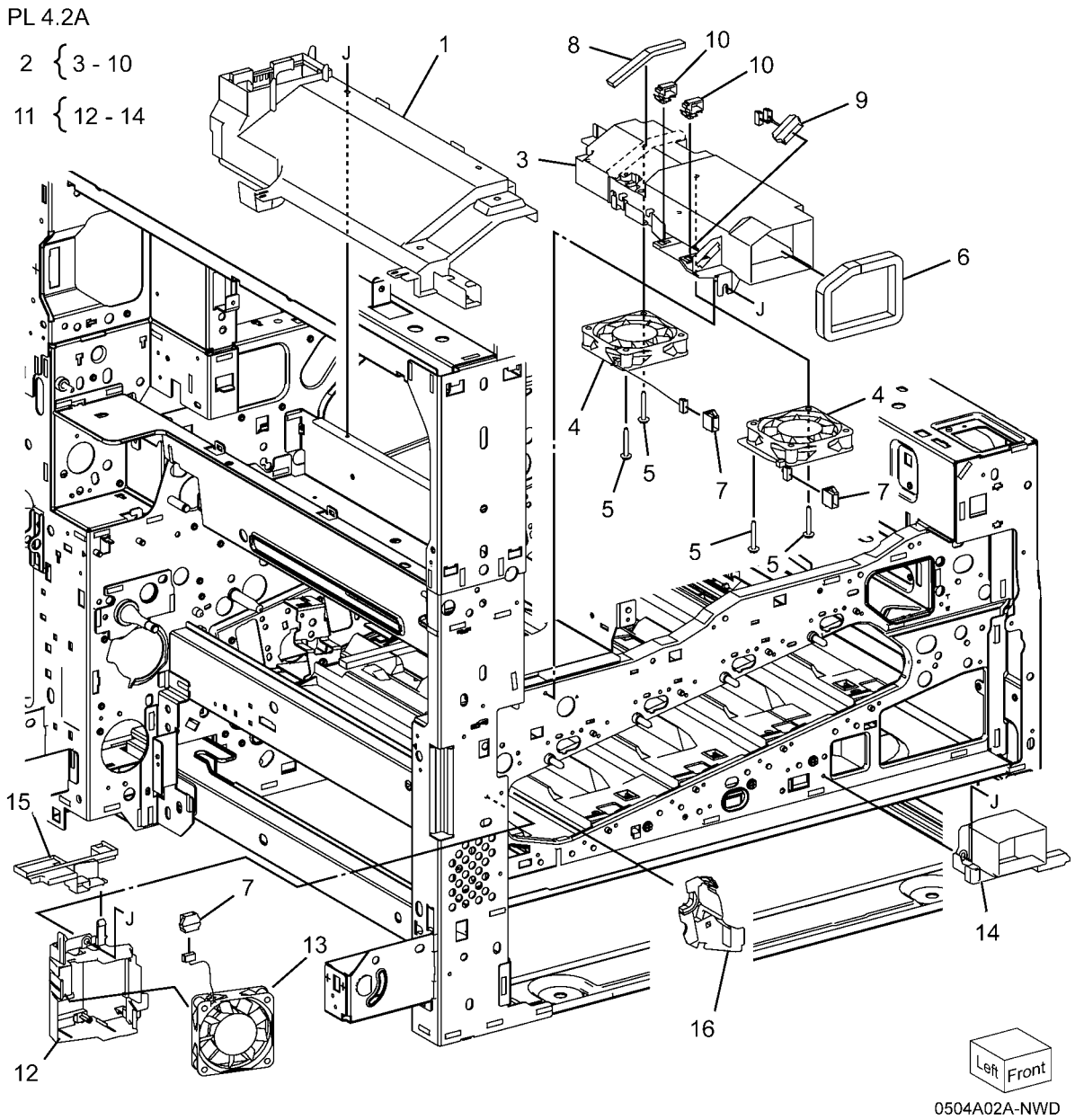

PL 4.2B NOHAD (7545, 7556)(1 of 3)

Item	Part	Description
1	–	Center Duct (Not Spared)
2	054K41430	Fan And Duct Assembly
3	–	Duct (P/O PL 4.2B Item 2)
4	–	Cartridge Fan (P/O PL 4.2B Item 2)
5	–	Plate (P/O PL 4.2B Item 2)
6	–	Screw (P/O PL 4.2B Item 2)
7	–	Connector (P/O PL 4.2B Item 2)
8	054K41440	Process Fan And Duct Assembly
9	–	Duct (P/O PL 4.2B Item 8)
10	–	Fan (P/O PL 4.2B Item 8)
11	826E11030	Screw
12	913W13170	Connector
13	815E51940	Plate
14	054K41410	Process 1 Fan And Duct Assembly
15	–	Duct (P/O PL 4.2B Item 14)
16	–	Process Fan 1 (P/O PL 4.2B Item 14)
17	–	Screw (P/O PL 4.2B Item 14)
18	–	Seal (Not Spared)

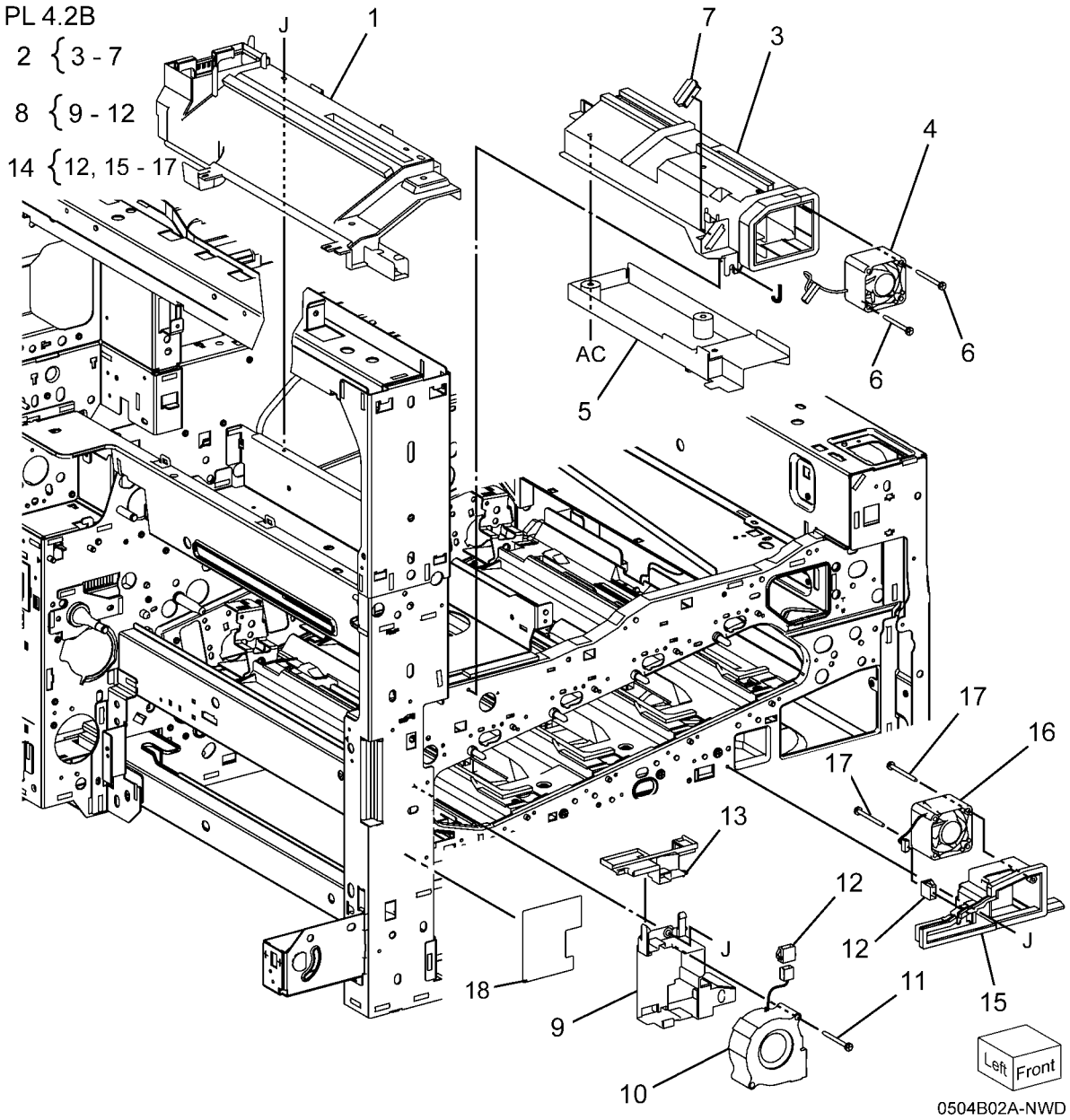

PL 4.3A NOHAD (7525, 7530, 7535)(2 of 3)

Item	Part	Description
1	054K36221	Bottom Fan And Duct Assembly
2	927W00325	Bottom Fan
3	–	Bottom Duct (P/O PL 4.3A Item 1)
4	913W13170	Connector
5	–	Screw (P/O PL 4.3A Item 1)
6	054K34551	HVPS Fan And Duct Assembly
7	–	Upper Duct (P/O PL 4.3A Item 6)
8	–	Lower Duct (P/O PL 4.3A Item 6)
9	127K60990	IH Exhaust Fan
10	–	Connector (P/O PL 4.3A Item 6)
11	–	IH Exhaust Fan (Not Spared)

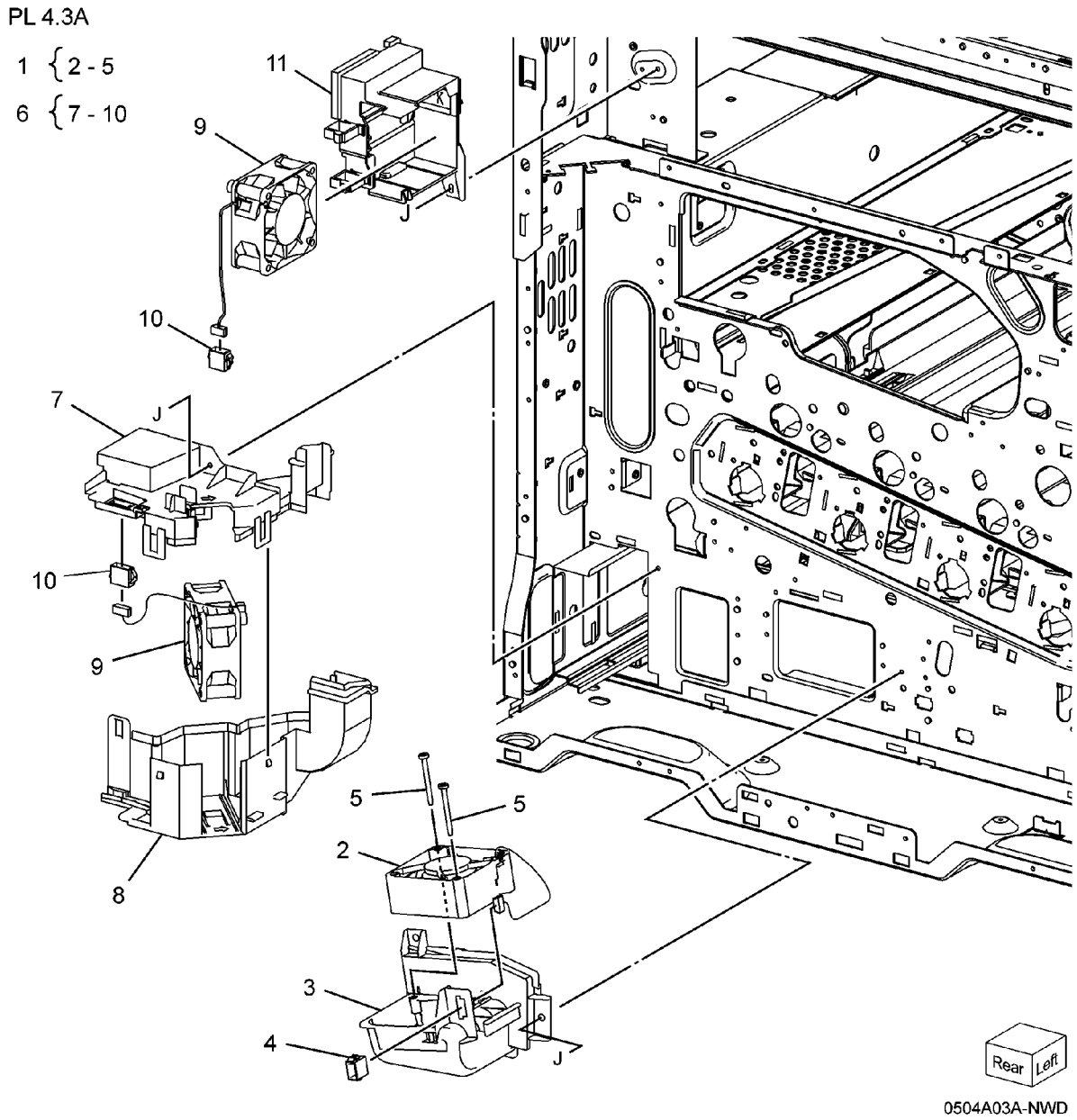

PL 4.3B NOHAD (7545, 7556)(2 of 3)

Item	Part	Description
1	897E34340	Label (R12)
2	–	Bottom Duct (Not Spared)
3	127K64480	Bottom Fan
4	913W13170	Connector
5	826E11030	Screw
6	–	M Fan And Duct Assembly (Not Spared)
7	–	Lower Duct (P/O PL 4.3B Item 6)
8	–	Upper Duct (P/O PL 4.3B Item 6)
9	127K60990	IH Exhaust Fan
10	–	Connector (P/O PL 4.3B Item 6)
11	–	IH Exhaust Duct (Not Spared)
12	–	Screw (Not Spared)
13	–	Connector (Not Spared)
14	–	Duct (Not Spared)
15	–	Section Duct (Not Spared)
16	053K93180	Suction Filter
17	–	Rear Fan Duct (Not Spared)
18	127K61230	C Exit Fan And Duct
19	127K60690	Exit Fan
20	–	Duct (P/O PL 4.3B Item 18)

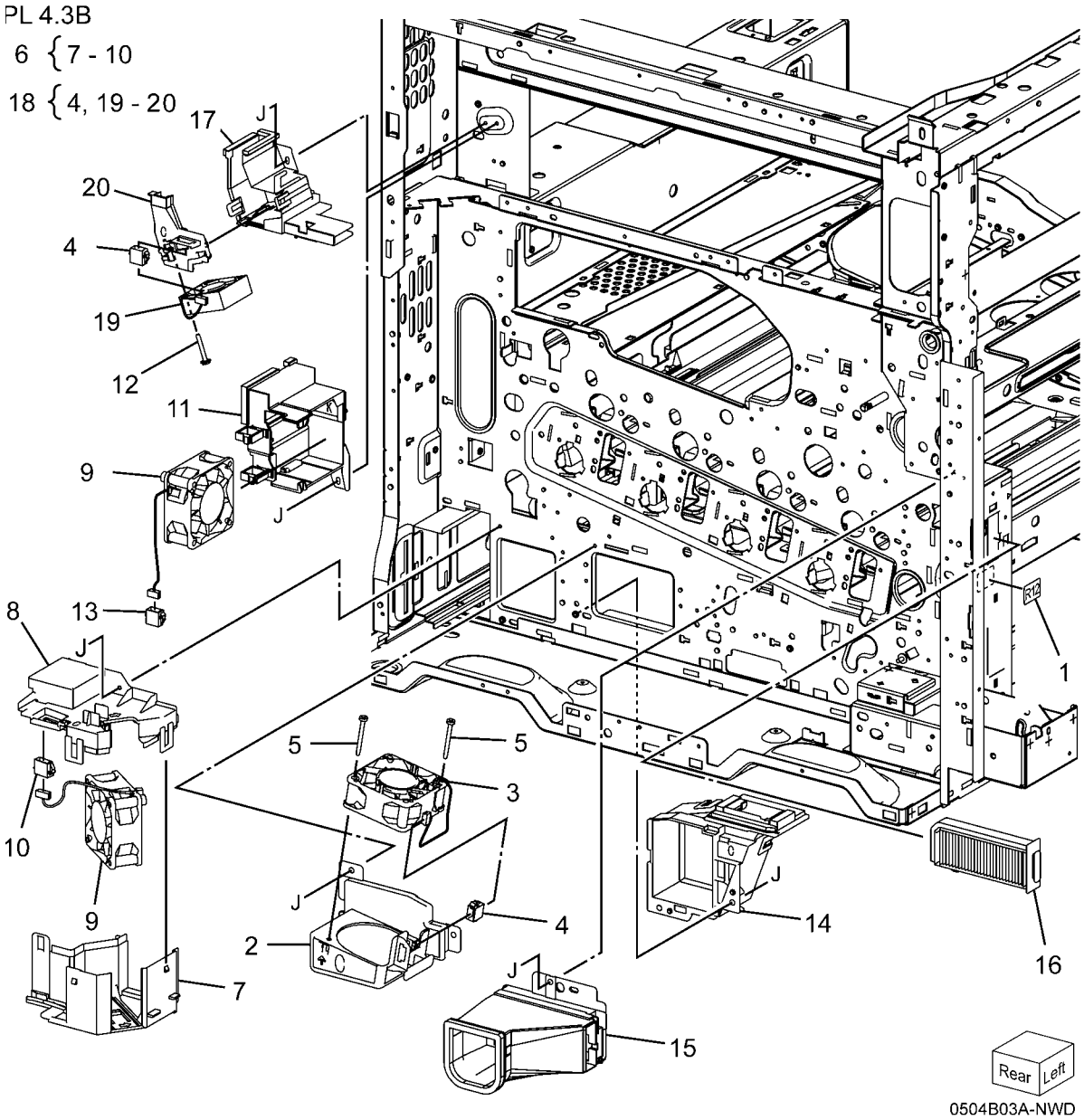

PL 4.4A NOHAD (7525, 7530, 7535)(3 of 3)

Item	Part	Description
1	054E34551	Front Bottom Duct
2	848K26480	HVPS Cover
3	815K02610	Base Plate Assembly
4	–	Base Plate (P/O PL 4.4A Item 3)
5	–	Bracket (P/O PL 4.4A Item 3)
6	–	NOHAD Thermistor (P/O PL 4.4A Item 3)
7	–	Connector (P/O PL 4.4A Item 3)
8	130K71990	NOHAD Thermistor and Bracket Assembly
9	054E33581	Front Duct
10	054E40390	Front Duct Plate

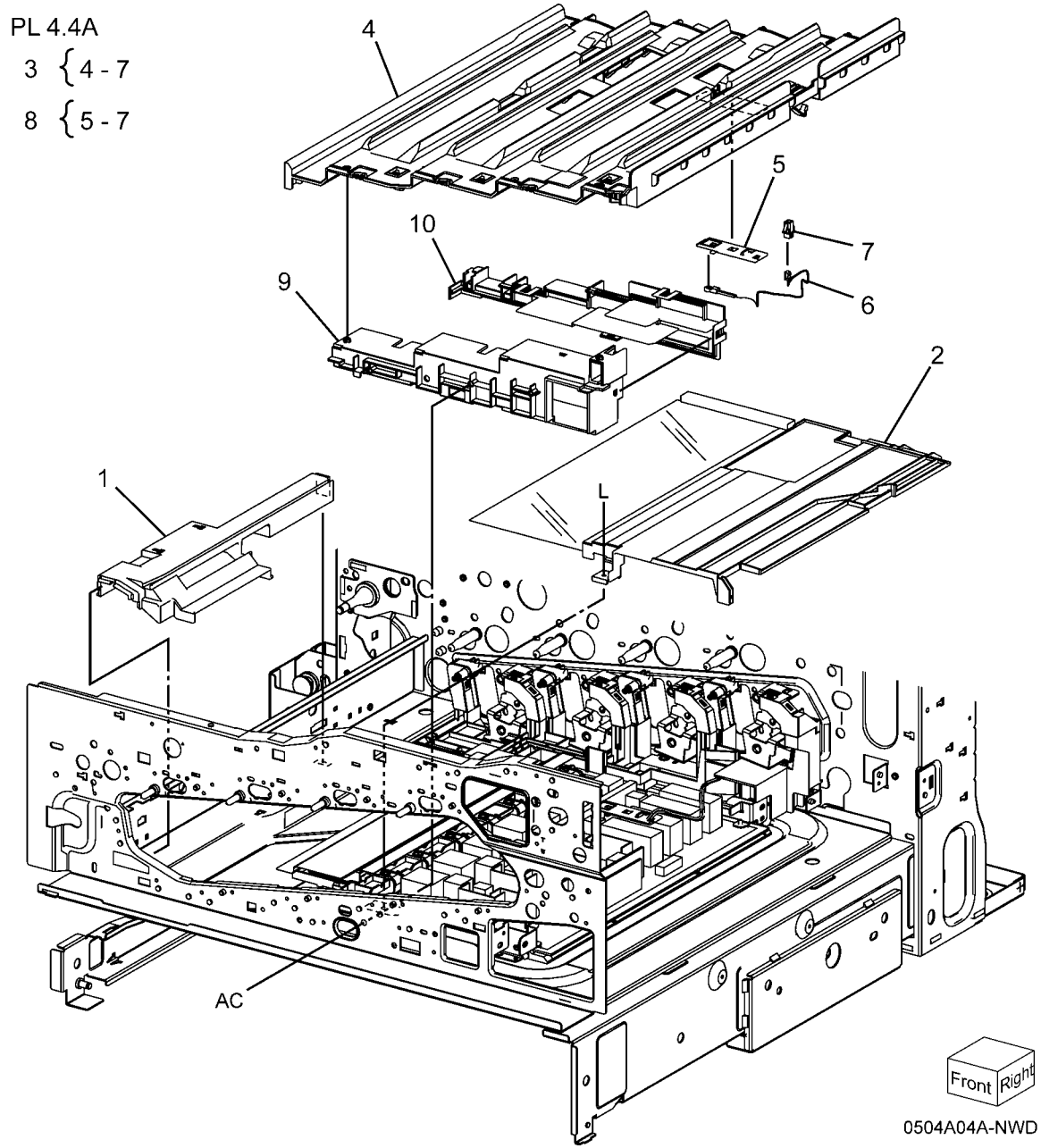

PL 4.4B NOHAD (7545, 7556)(3 of 3)

Item	Part	Description
1	–	Front Bottom Duct (Not Spared)
2	815K03601	Base Plate Assembly
3	–	Base Plate (P/O PL 4.4B Item 2)
4	–	Bracket (P/O PL 4.4B Item 2)
5	–	NOHAD Thermistor (P/O PL 4.4B Item 2, PL 4.4B Item 7)
6	–	Connector (P/O PL 4.4B Item 2, PL 4.4B Item 7)
7	130K71990	NOHAD Thermistor And Bracket Assembly
8	–	Seal (P/O PL 4.4B Item 7)
9	–	Seal (Not Spared)
10	–	Front Duct Assembly (Not Spared)
11	–	Front Duct (P/O PL 4.4B Item 10)
12	–	Lower Plate (P/O PL 4.4B Item 10)
13	–	Seal (P/O PL 4.4B Item 10)
14	–	Seal (P/O PL 4.4B Item 10)
15	–	Seal (P/O PL 4.4B Item 10)
16	–	Seal (P/O PL 4.4B Item 10)
17	–	Seal (P/O PL 4.4B Item 10)

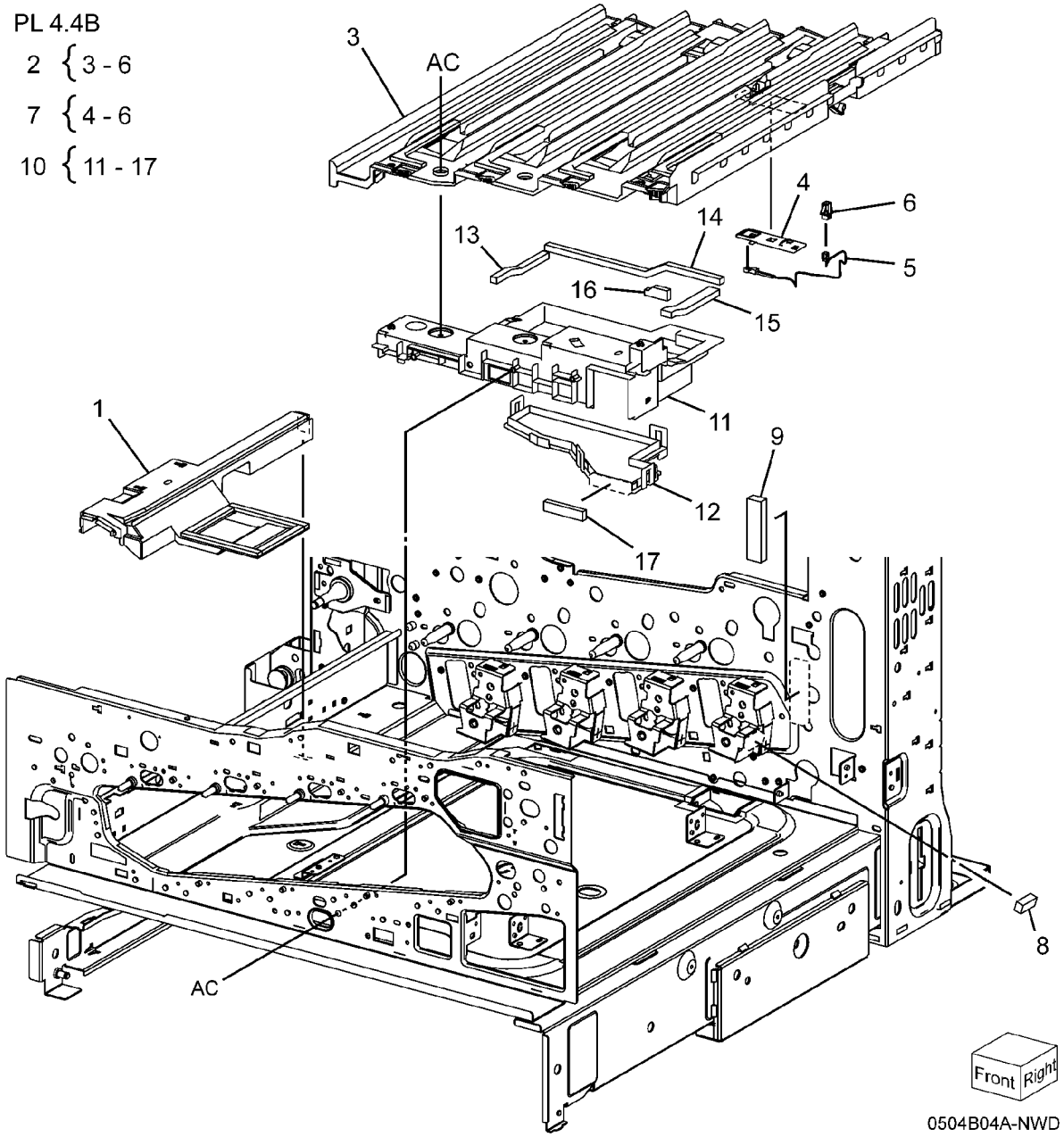

PL 5.1 Development (1 of 2)

Item	Part	Description
1	006R01509	K-Toner (WW)
–	006R01513	K-Toner (NA/E)
–	006R01517	K-Toner (DMO)
2	006R01518	Y-Toner (DMO)
–	006R01510	Y-Toner (WW)
–	006R01514	Y-Toner (NA/E)
3	006R01511	M-Toner (WW)
–	006R01515	M-Toner (NA/E)
–	006R01519	M-Toner (DMO)
4	006R01512	C-Toner (WW)
–	006R01520	C-Toner (DMO)
–	006R01516	C-Toner (NA/E)
5	127K57131	Toner Dispense Motor Assembly (REP 9.13)
6	–	Dispense Assembly (P/O PL 5.1 Item 5)
7	127K53162	Toner Dispense Motor (K, C, M, Y)
8	113K83244	Toner CRUM Coupler Assembly
9	094K92391	Dispense Pipe Assembly (K, C, M, Y)
10	–	Guide Assembly (K, C, M, Y) (P/O PL 5.1 Item 9)
11	–	Auger Gear (Y. M, C) (P/O PL 5.1 Item 9)
12	–	Spring (P/O PL 5.1 Item 9)
13	–	Dispenser Pipe (Y) (P/O PL 5.1 Item 9)
14	–	Dispenser Pipe (M) (P/O PL 5.1 Item 9)
15	–	Dispenser Pipe (C) (P/O PL 5.1 Item 9)
16	094K92830	Dispenser Pipe Assembly (7525, 7530, 7535)
–	094K92770	Dispenser Pipe Assembly (K) (7545, 7556)
17	–	Guide Assembly (P/O PL 5.1 Item 16)
18	–	Dispenser Pipe (K) (P/O PL 5.1 Item 16)
19	–	Auger Gear (K) (P/O PL 5.1 Item 16)
20	094K92820	Dispenser Pipe Assembly (Y, M, C, K) (7525, 7530, 7535)
–	094K92760	Dispenser Pipe Assembly (Y, M, C, K) (7545, 7556)

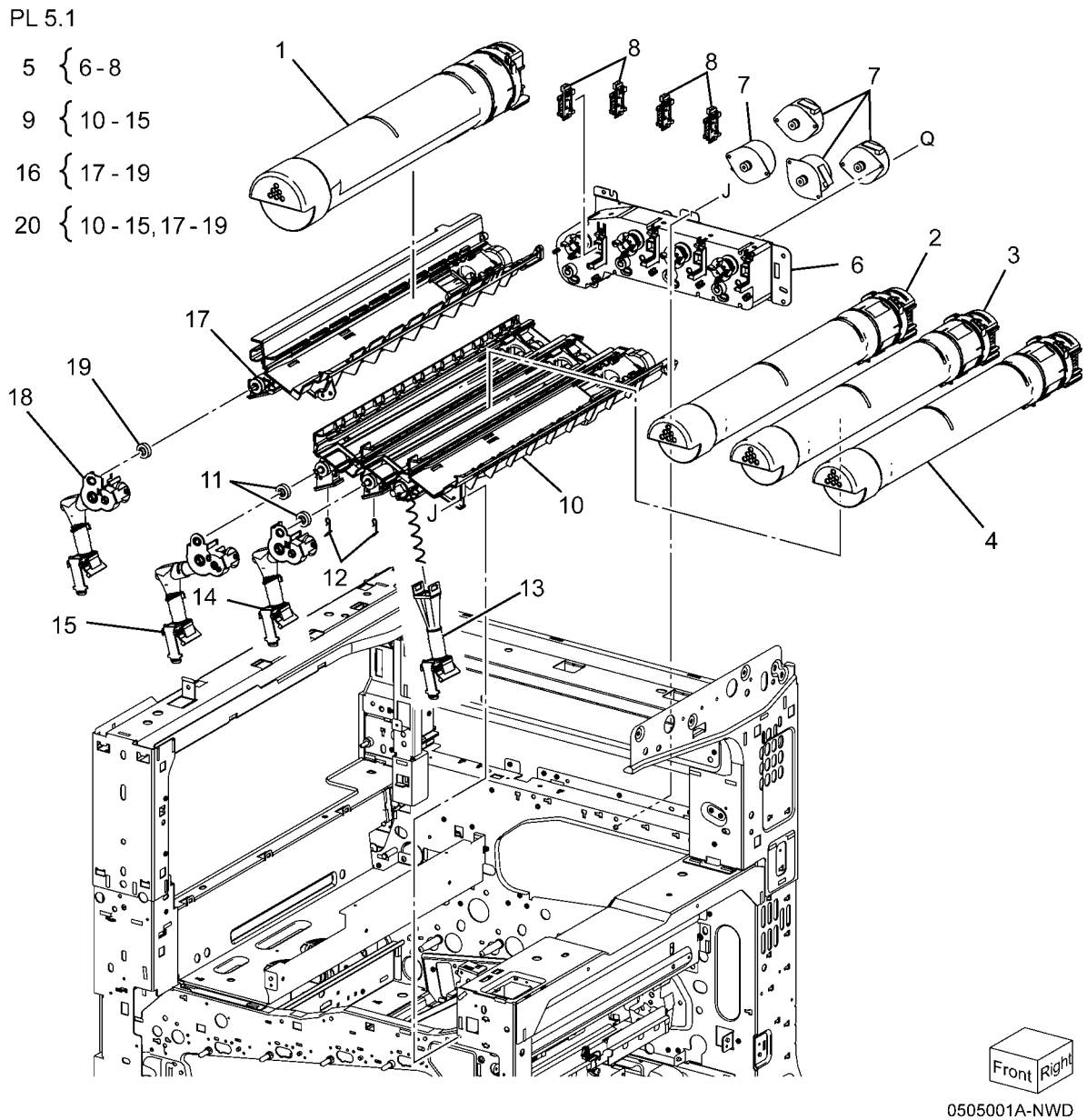

PL 5.2 Development (2 of 2)

Item	Part	Description
1	015K77960	Developer Plate
2	604K63570	Developer Housing Assembly (K, C, M, Y) (REP 9.14)
3	–	Housing Assembly (P/O PL 5.2 Item 2)
4	130K71851	ATC Sensor (K, C, M, Y)
5	–	Seal (P/O PL 5.2 Item 2)
6	675K85030	Developer (K)
7	675K85040	Developer (C)
8	675K85050	Developer (M)
9	675K85060	Developer (Y) (REP 9.15)
10	010K91700	Plunger Assembly
11	960K49660	ATC PWB
12	849E96933	Bracket

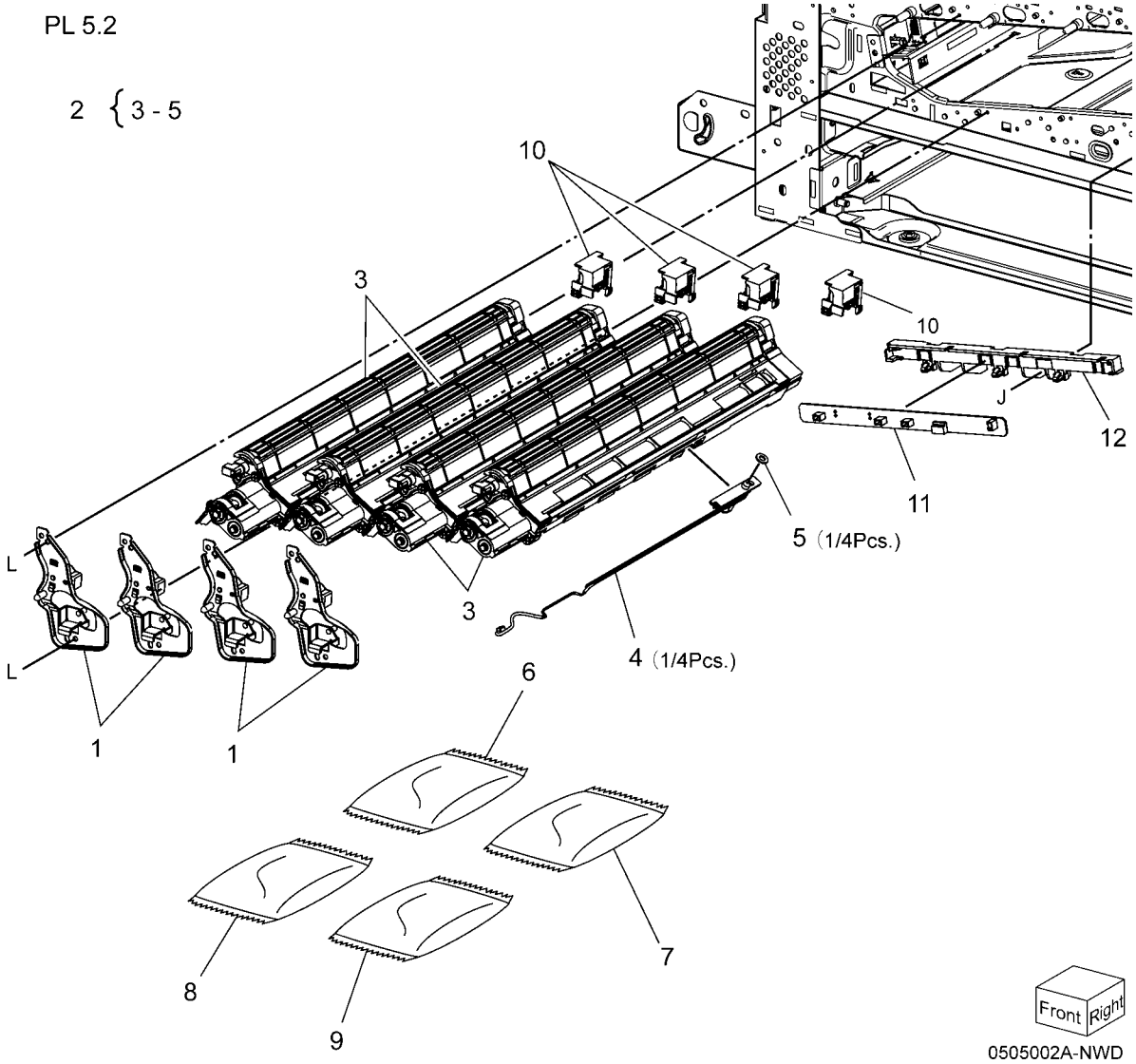

PL 5.3 HVPS Developer (7545, 7556)

Item	Part	Description
1	848K37870	HVPS Housing
2	019K11110	Conductor Holder
3	815K04490	Developer HVPS (7545, 7556) (REP 1.2)
4	130E13880	Ground Conductor (7545, 7556)

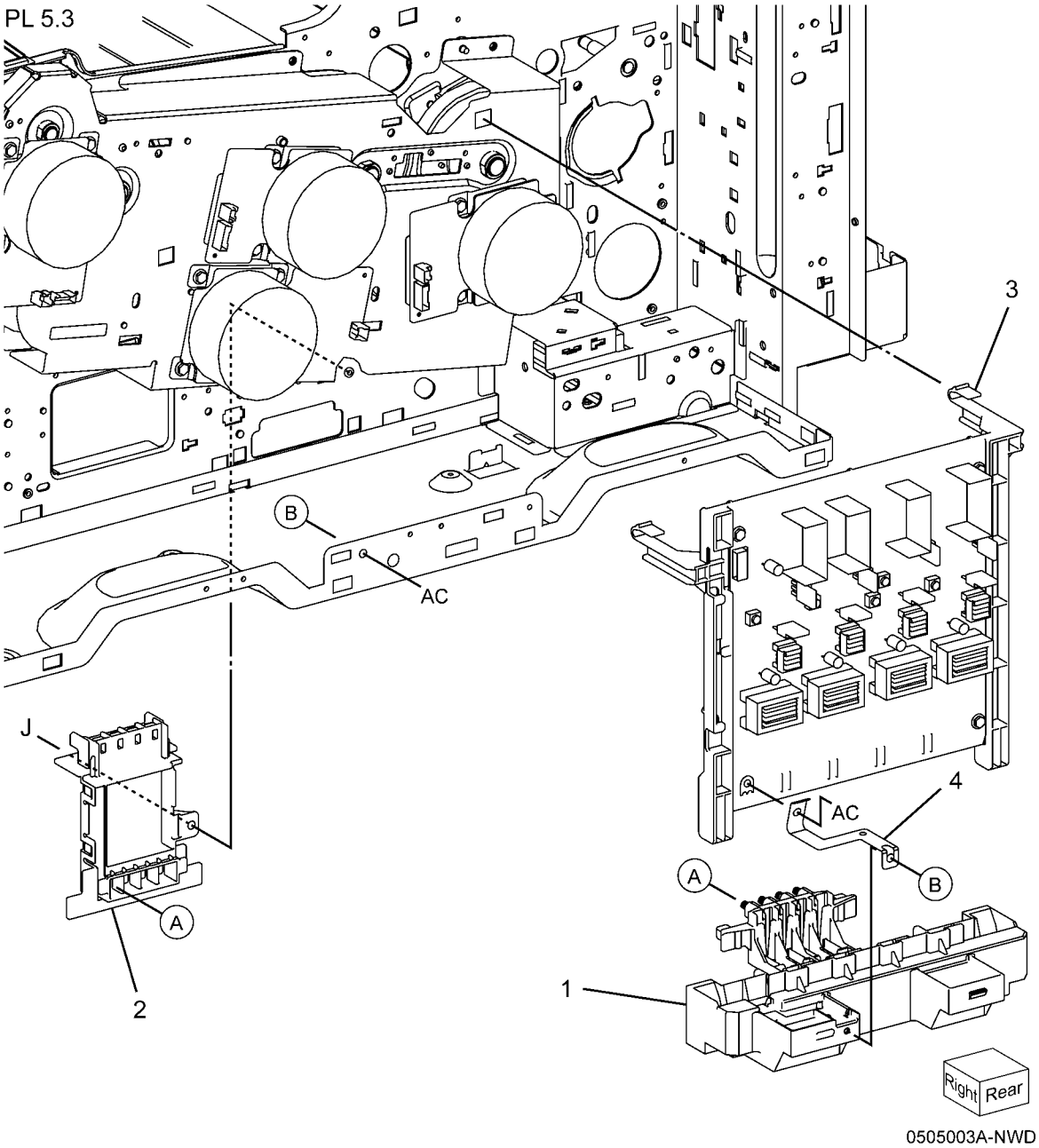

PL 6.1 Transfer (1 of 2)

Item	Part	Description
1	068K53690	Front Lock Bracket
2	068K53680	Rear Lock Bracket
3	003E78891	Tension Lever
4	–	Transfer Belt Cleaner Assembly (REP 9.1)
5	–	Knob (P/O PL 6.1 Item 4)
6	–	Bearing (P/O PL 6.1 Item 4)
7	–	Transfer Belt Cleaner (P/O PL 6.1 Item 4)
8	–	Spring (P/O PL 6.1 Item 4)
9	–	Shutter (P/O PL 6.1 Item 4)
10	604K57383	IBT Assembly (REP 9.2)

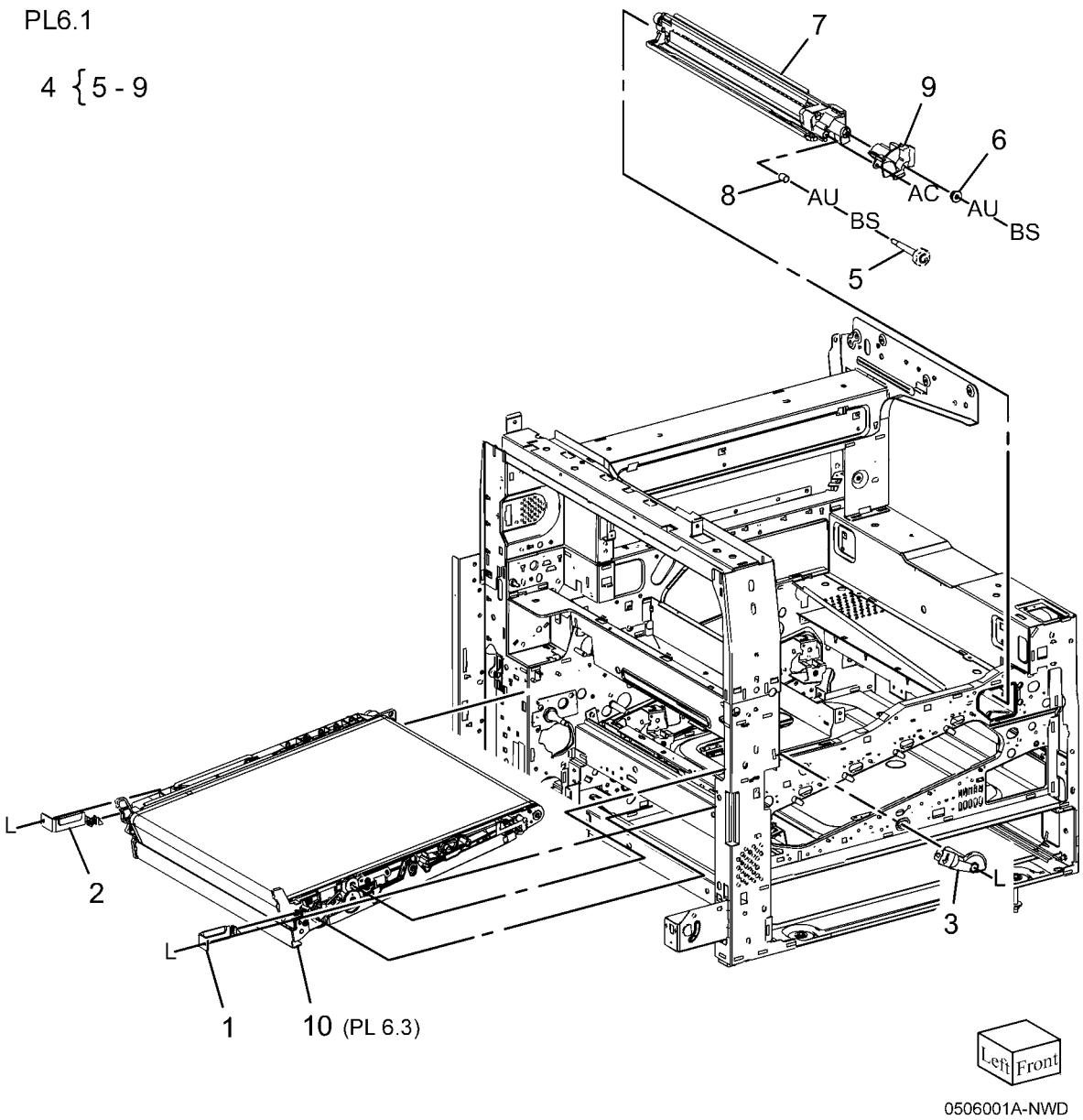

PL 6.2 Transfer (2 of 2)

Item	Part	Description
1	815E38150	Plate Nut
2	032K06050	IBT Cleaner Guide
3	413W15959	Metal Bearing
4	032E27610	IBT Front Guide
5	130E94310	Conductor
6	120E29340	Actuator
7	032K05310	Guide Assembly (7525, 7530, 7535)
–	032K06320	Guide Assembly (7545, 7556)
8	848K13960	Conductor Housing Assembly
9	105E17530	HVPS/Detack HVPS (REP 1.1)
10	–	PWB Support (Not Spared)
11	–	Bracket (Not Spared)

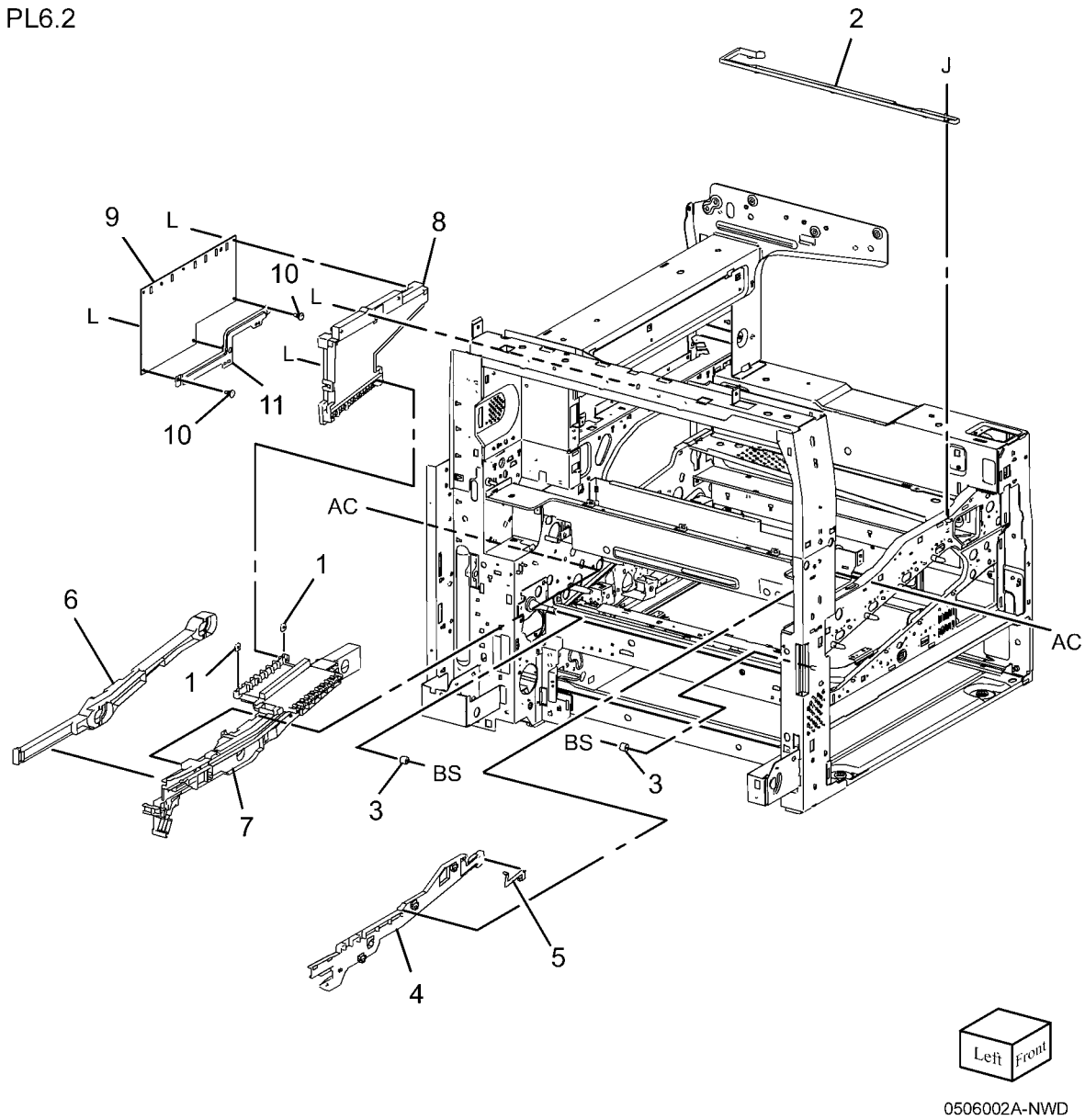

PL 6.3 IBT Assembly (1 of 2)

Item	Part	Description
1	003E75420	Handle
2	054K34290	Inlet Chute
3	801E03440	BUR Front Frame
4	059K54991	Back-up Roll
5	064K93621	Transfer Belt Assembly (REP 9.2)
6	–	Transfer Belt (P/O PL 6.3 Item 5)
7	–	TR0 Patch (P/O PL 6.3 Item 5) (REP 9.4)
8	059K74990	Drive Pinch Roll Assembly

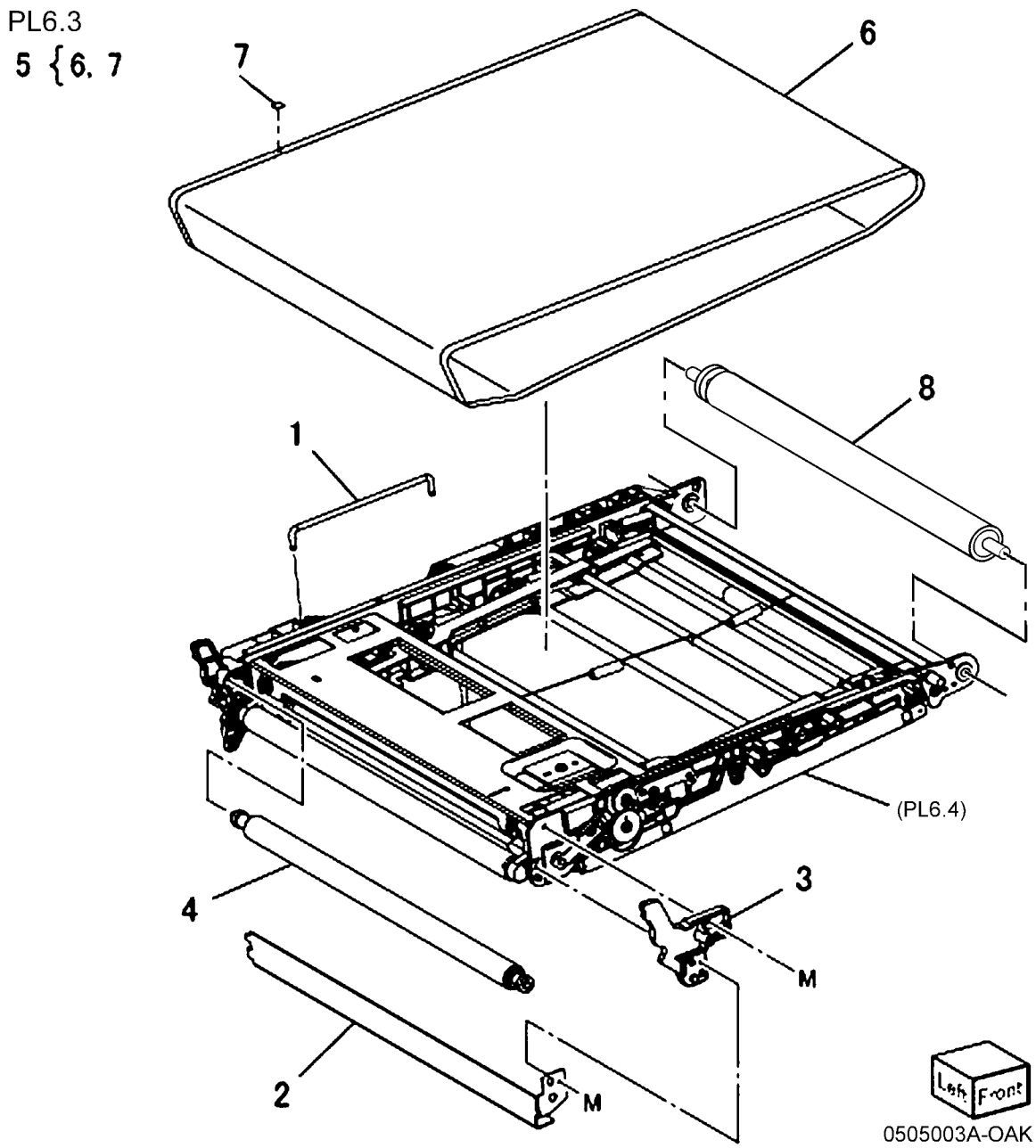

PL 6.4 IBT Belt Unit (2 of 2)

Item	Part	Description
1	059E03290	1st BTR Roll
2	130E93970	1st BTR Conductor
3	806E21460	Tension Spring Shaft
4	809E74790	1st BTR Spring
5	809E74800	IR Spring
6	809E74810	BTR Spring
7	809E74870	Tension Spring
8	809E75300	Ground Spring
9	809E76310	Ground Center Spring
10	809E76320	Ground Right Spring
11	809E76810	BTR Spring
12	809E76981	Adjust Spring
13	–	IBT Belt Assembly (P/O PL 6.1 Item 10)

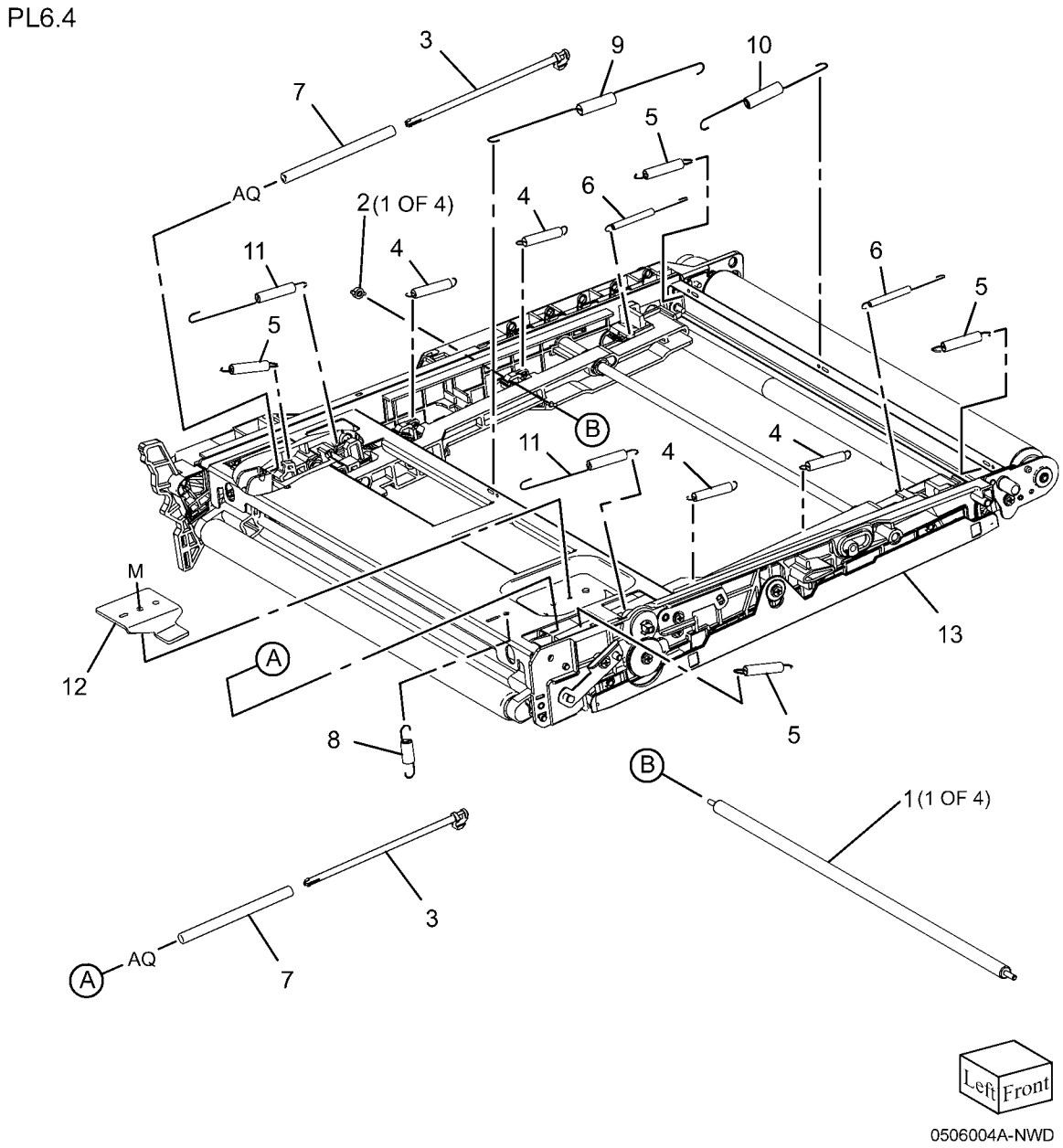

PL 7.1 Fuser

Item	Part	Description
1	604K62220	Fuser Assembly (220V) (7525, 7530, 7535) (REP 10.1)
–	604K62230	Fuser Assembly (220V) (7545, 7556)
–	604K62200	Fuser Assembly (120V) (7525, 7530, 7535)
–	604K62210	Fuser Assembly (120V) (7545, 7556)
2	007K16060	Retract Motor And Bracket Assembly
3	–	Motor Bracket (P/O PL 7.1 Item 2)
4	127K60980	P/R Latch Motor
5	007K16070	Retract Gear

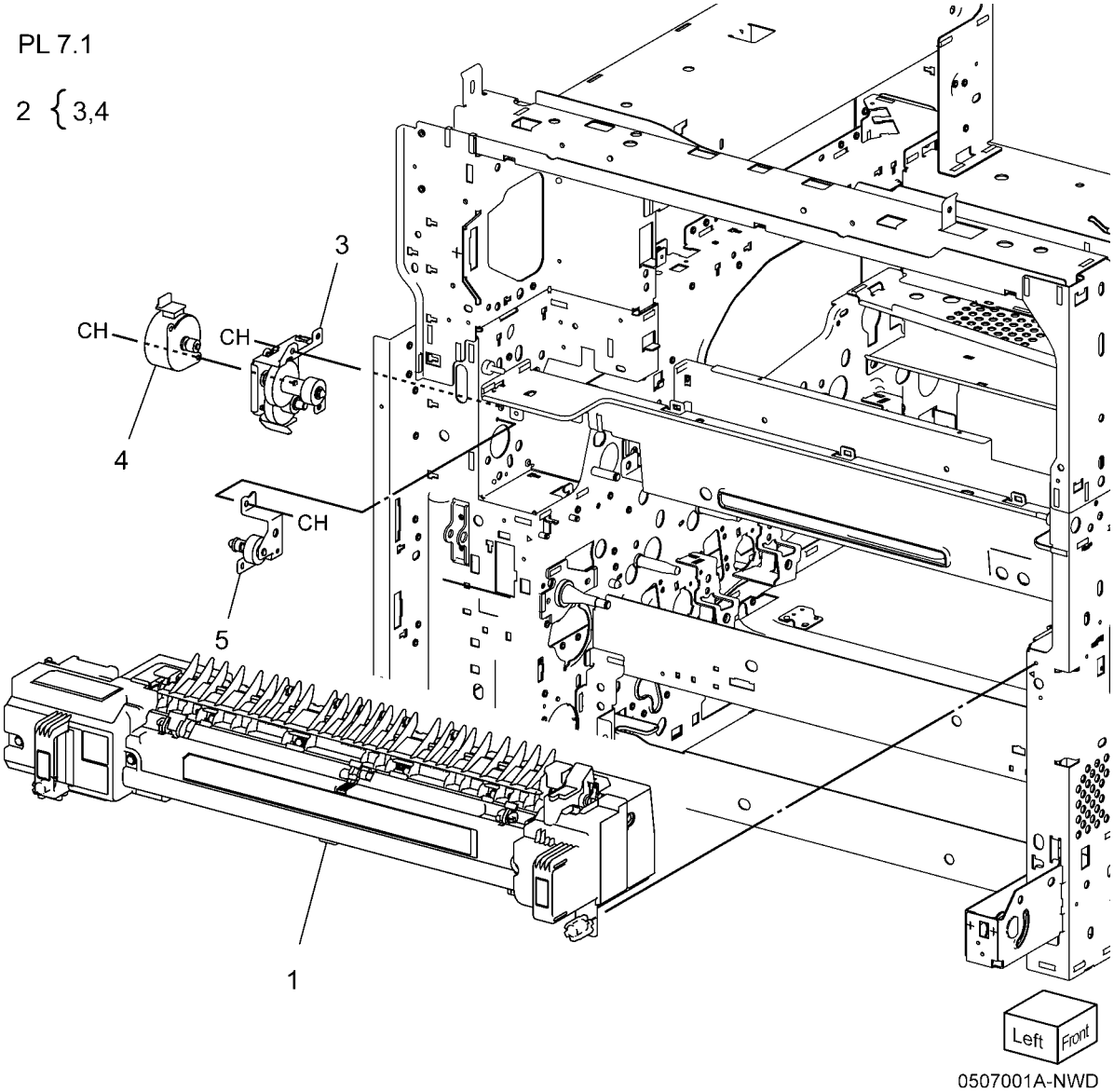

PL 8.1 Xerographic (1 of 2)

Item	Part	Description
1	019K10731	CRUM Holder
2	848E21520	CRUM Cover
3	113K83481	CRUM Coupler Drum
4	013R00662	Drum Cartridge (REP 9.5)
5	032K04701	Erase Lamp Unit (REP 9.7)
6	868E06271	Bracket
7	868E06281	Plate
8	032E27581	Harness Holder
9	–	Harness Holder (Not Spared)
10	848E15090	Cover
11	011E20901	Handle Lock Lever
12	868E08980	Bracket
13	809E79410	Spring
14	809E79420	Spring

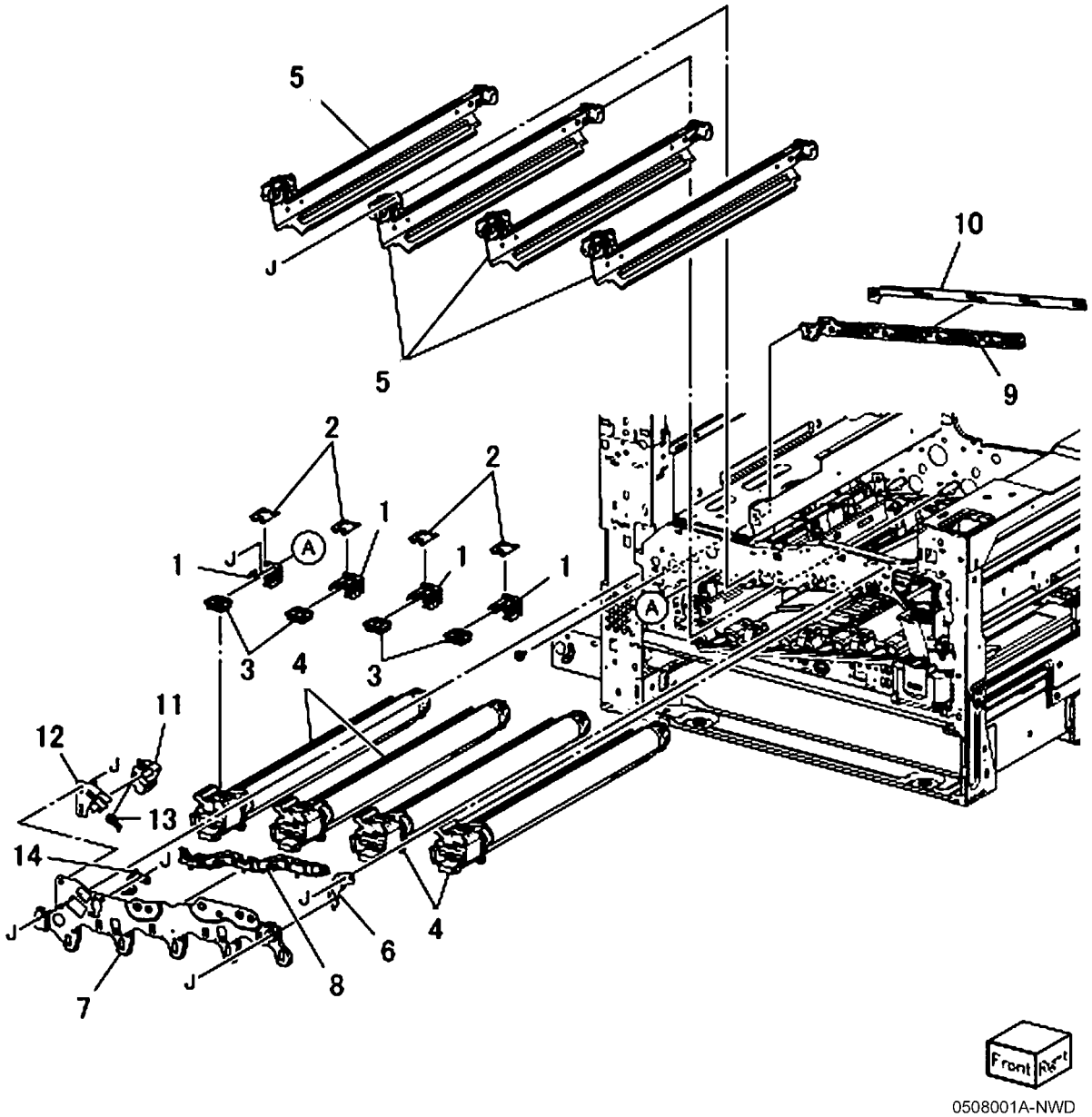

PL 8.2 Xerographic (2 of 2)

Item	Part	Description
1	–	Bottle Guide Assembly (P/O PL 8.2 Item 15)
2	–	Sensor Bracket (P/O PL 8.2 Item 15, PL 8.2 Item 16)
3	–	Waste Toner Bottle Full Sensor (P/O PL 8.2 Item 15, PL 8.2 Item 16)
4	130E81600	Waste Toner Bottle Position Sensor
5	052K97773	Waste Toner Pipe Assembly
6	068K59502	Agitator Motor Assembly (REP 9.8)
7	068K59510	Gear Bracket Assembly
8	807E19540	Helical Gear (29T)
9	807E19530	Helical Gear (31T)
10	006K86982	Drive Shaft Assembly
11	807E19511	Helical Gear (20T)
12	868E14631	Harness Holder
13	413W11660	Sleeve Bearing
14	–	Waste Toner Container
15	032K05160	Bottle Guide And Sensor Assembly
16	068K58211	Sensor And Bracket Assembly

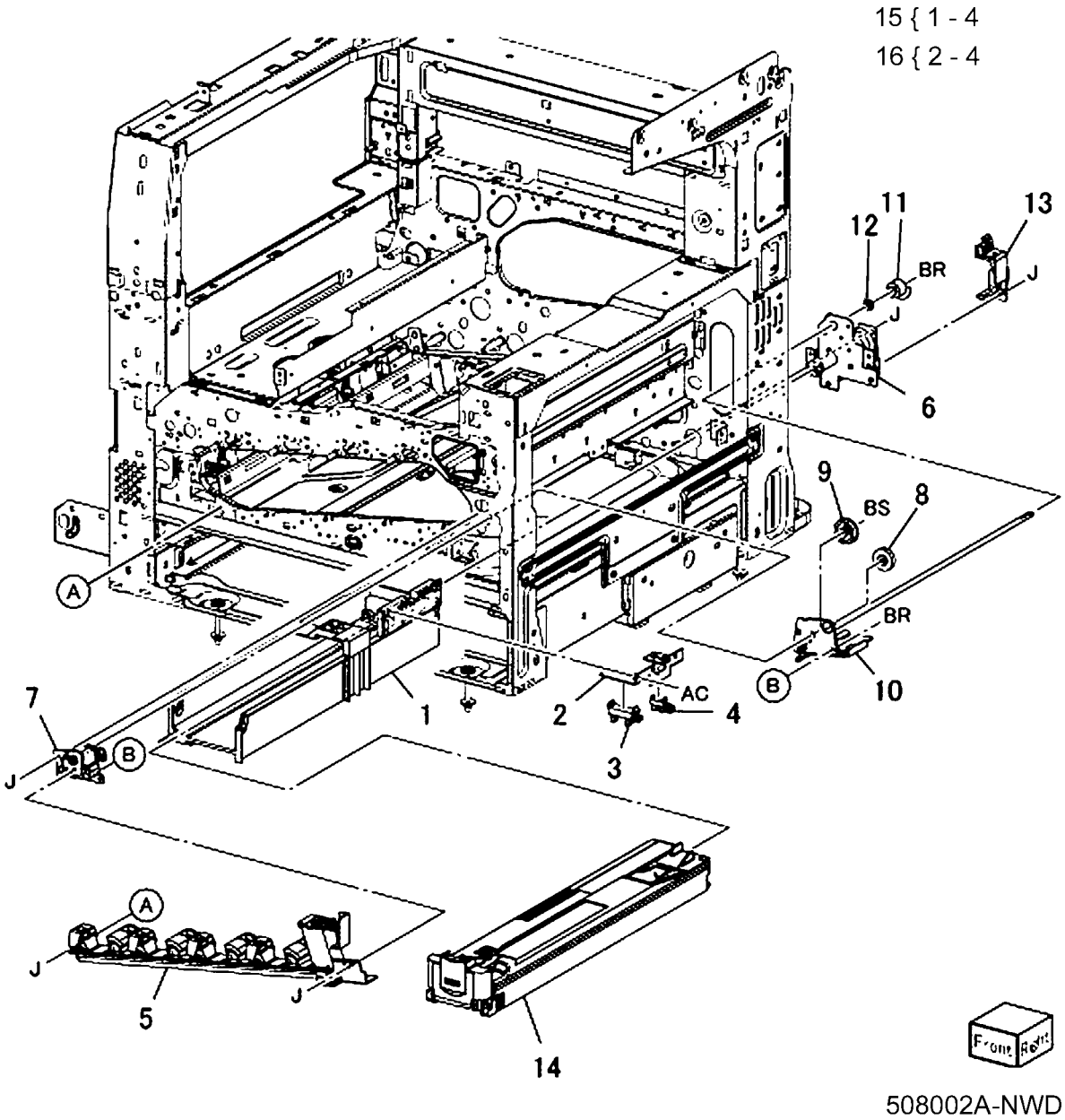

PL 9.1 Tray 1/2 (1 of 2)

Item	Part	Description
1	014E45291	Slide Lock Block
2	003E76461	Front Stopper
3	059E03500	Front Left Roller
4	059E03510	Front Right Roller
5	050K65383	Tray 1 Assembly
6	110K11680	Paper Size Sensor Assembly
7	849E96071	Switch Bracket
8	–	Tray 1, Tray 2 Label
9	–	Instruction Label
10	–	Side Size Label (Not Spared)
11	–	End Size Label (Not Spared)
12	604K62240	Tray Label Kit (REF: PL 10.2 Item 10, PL 10.2 Item 11)

PL9.1

12 { 8, PL10.2 ITEMS 10, 11

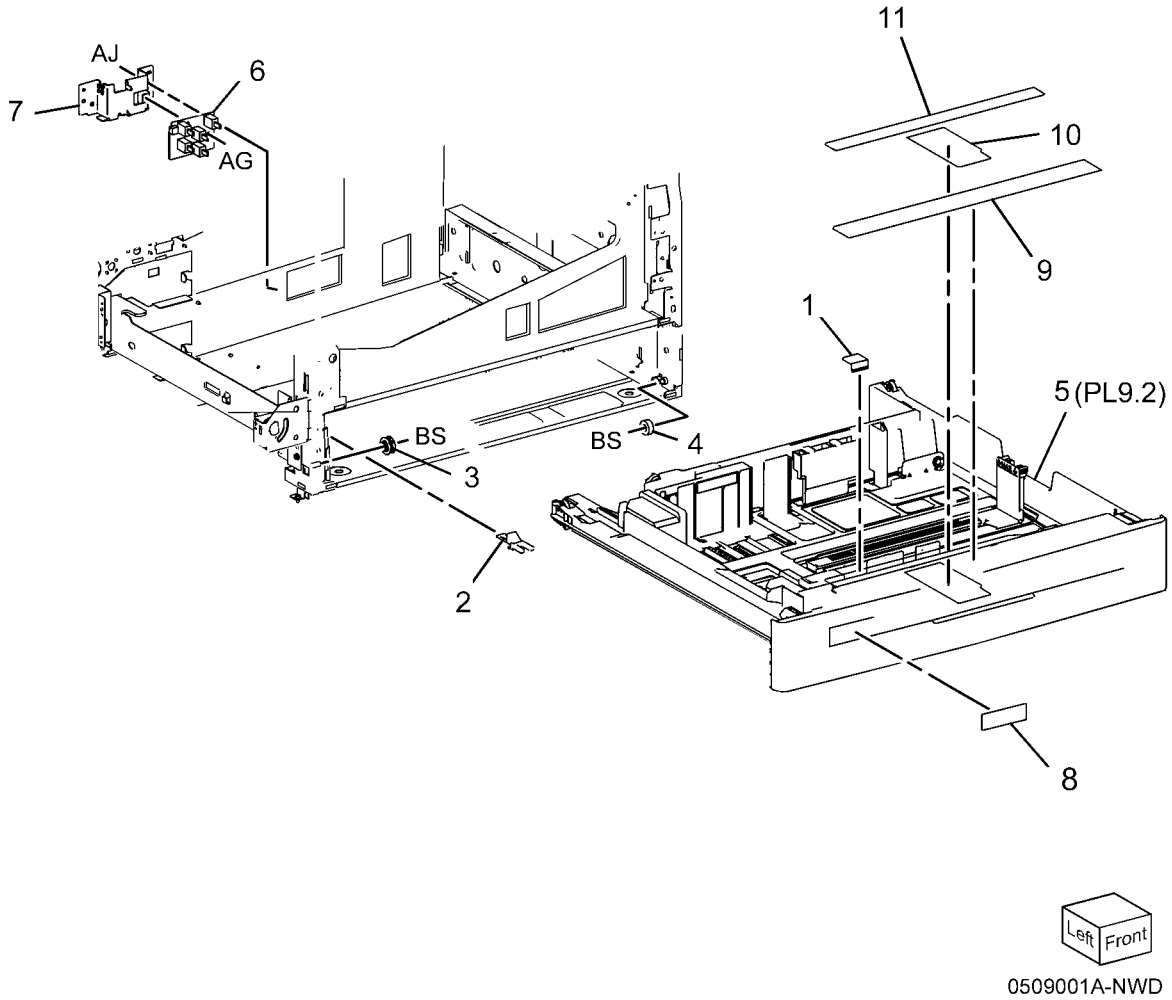

PL 9.2 Tray 1/2 (2 of 2)

Item	Part	Description
1	–	Gear (13T) (P/O PL 9.1 Item 1)
2	007E78450	Gear (13/60T)
3	007E78441	Gear (60T)
4	807E13520	Pinion
5	–	Link (Not Spared)
6	–	Bottom Pad Assembly (Not Spared)
7	–	End Guide (Not Spared)
8	–	Front Side Guide Assembly (Not Spared)
9	–	Rear Guide (Not Spared)
10	–	End Guide Actuator (P/O PL 9.1 Item 1)
11	–	Bottom Plate (P/O PL 9.1 Item 1)
12	059E03522	Rear Roller
13	–	Front Cover Assembly (P/O PL 9.1 Item 1)
14	848E15051	Front Trim Cover
15	011E24400	Tray Lever
16	003E75440	Latch
17	809E75730	Latch Spring
18	–	Pad (Not Spared)
19	848E21140	Storage Cover
20	010E93341	Slide Lock
21	014E63930	End Spacer
22	014E63940	Side Spacer

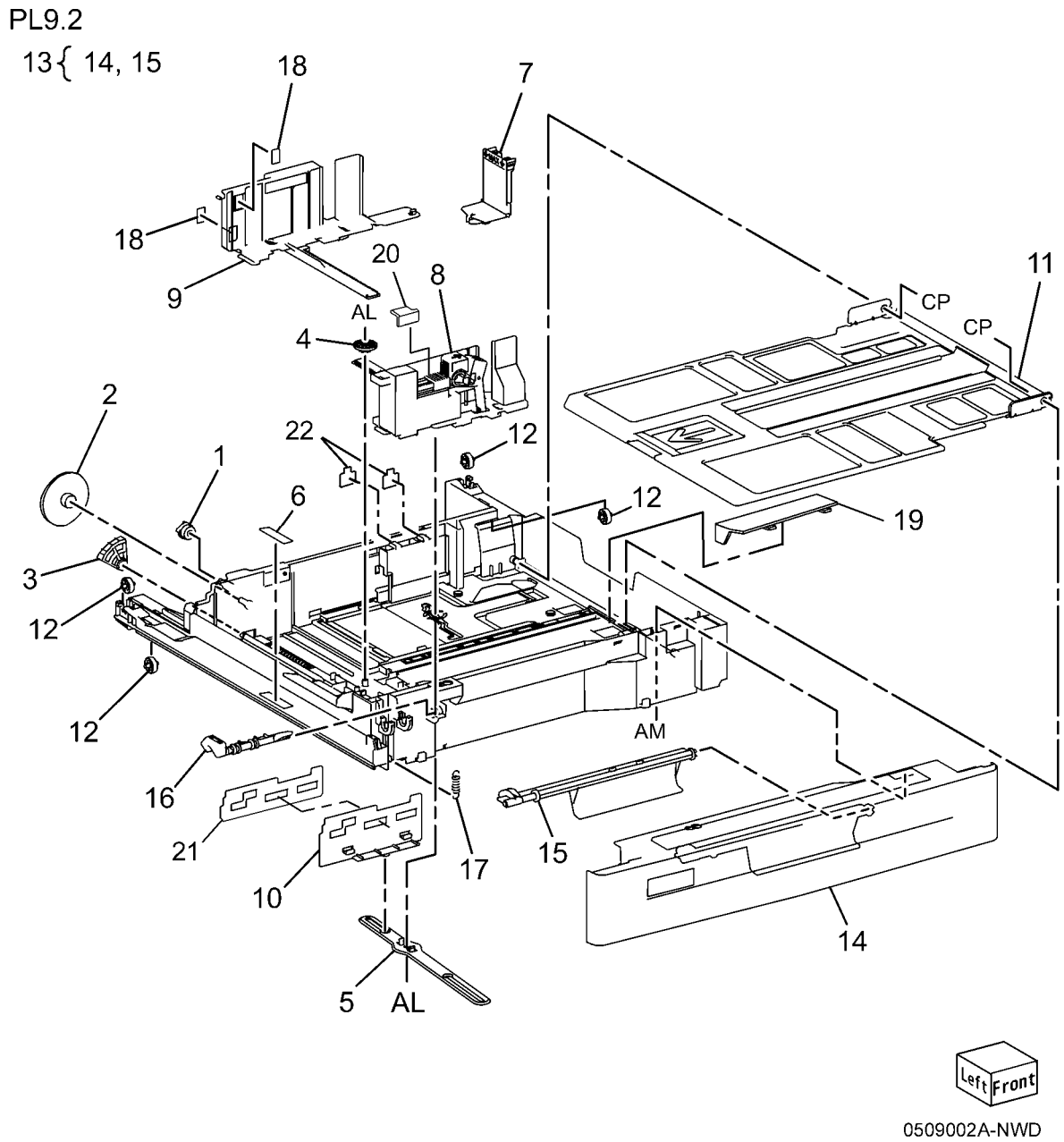

PL 9.3 Tray 1 Feeder

Item	Part	Description
1	059K66610	Tray 1 Feeder Assembly (7545, 7556) (REP 7.1)
2	054K35142	Chute Assembly
3	–	Chute (P/O PL 9.3 Item 2)
4	–	Pinch Guide (P/O PL 9.3 Item 2)
5	–	Spacer (P/O PL 9.3 Item 2)
6	–	Spring (P/O PL 9.3 Item 2)
7	–	Pinch Shaft (P/O PL 9.3 Item 2)
8	–	Pinch Roll (P/O PL 9.3 Item 2)

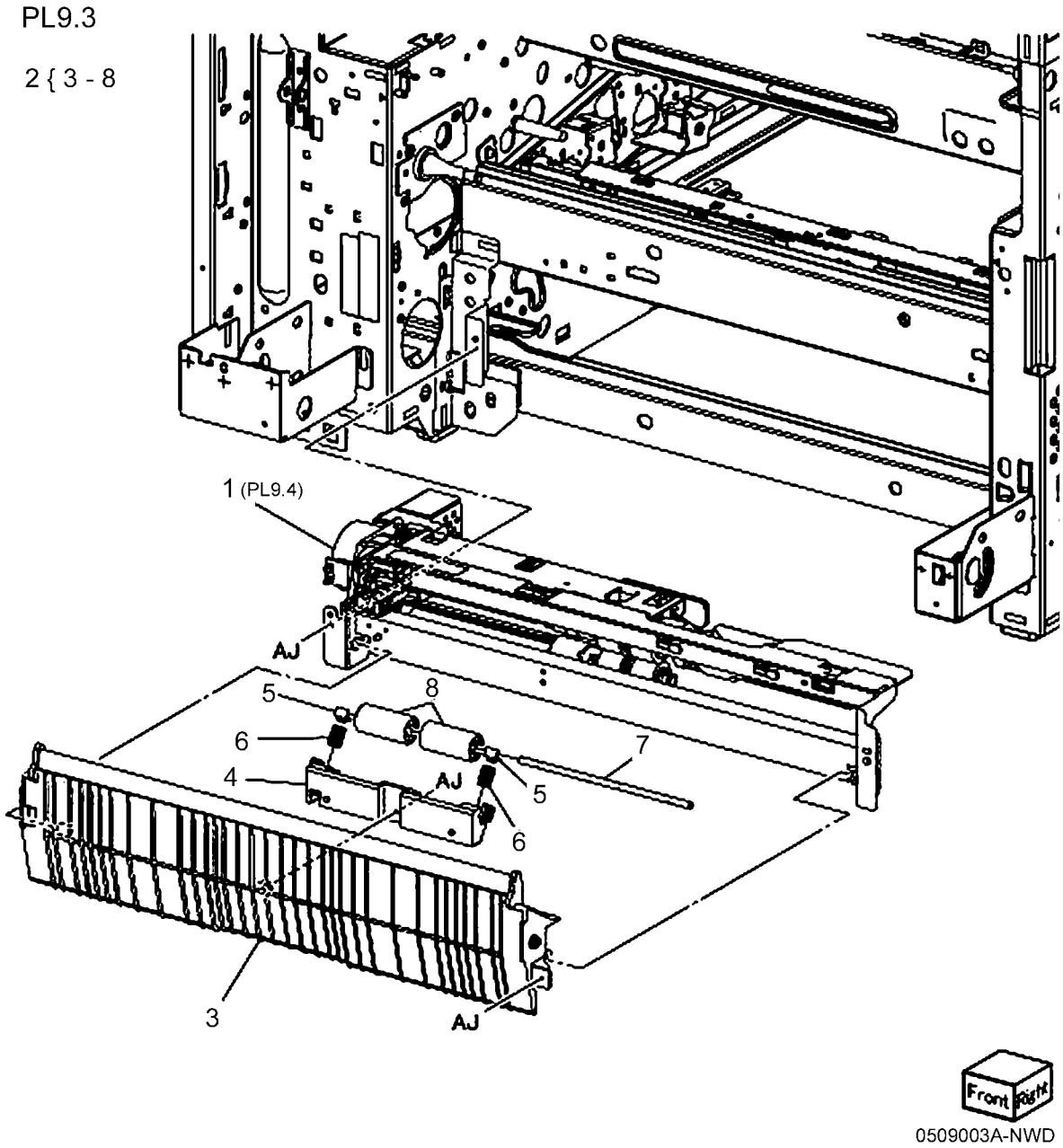

PL 9.4 Tray 1 Feeder Assembly (1 of 2)

Item	Part	Description
1	059K66630	Feeder Assembly (5725, 7530, 7535
2	–	Drive Bracket Assembly (P/O PL 9.3 Item 1)
3	127K52790	Lift Up Motor
4	–	Rail (P/O PL 9.3 Item 1)
5	054E23461	Chute (P/O PL 9.3 Item 1)
6	930W00113	Tray 1 Nudger Level Sensor, No Paper Sensor
7	120E22481	Actuator
8	–	Upper Harness Holder (P/O PL 9.3 Item 1)
9	–	Rear Harness Holder (P/O PL 9.3 Item 1)
10	807E00390	Gear (31T)
11	014E44770	Spacer
12	–	Bearing (P/O PL 9.3 Item 1)
13	006K23221	Drive Shaft
14	807E00800	Gear (13T)
15	005K83081	One Way Clutch
16	007K97870	One Way Gear
–	007K98130	One Way Clutch (Alternate)
–	007K16960	One Way Gear
17	807E20300	Helical Gear (25T)
18	807E20310	Helical Gear (29T/19T)
19	–	Washer (P/O PL 9.3 Item 1)
20	–	Wire Harness (P/O PL 9.3 Item 1)
21	–	Spring (P/O PL 9.3 Item 1)
22	930W00211	Tray 1 Pre Feed Sensor
23	801K29613	Upper Frame Assembly

PL9.4

1 { 2 - 23, PL9.5

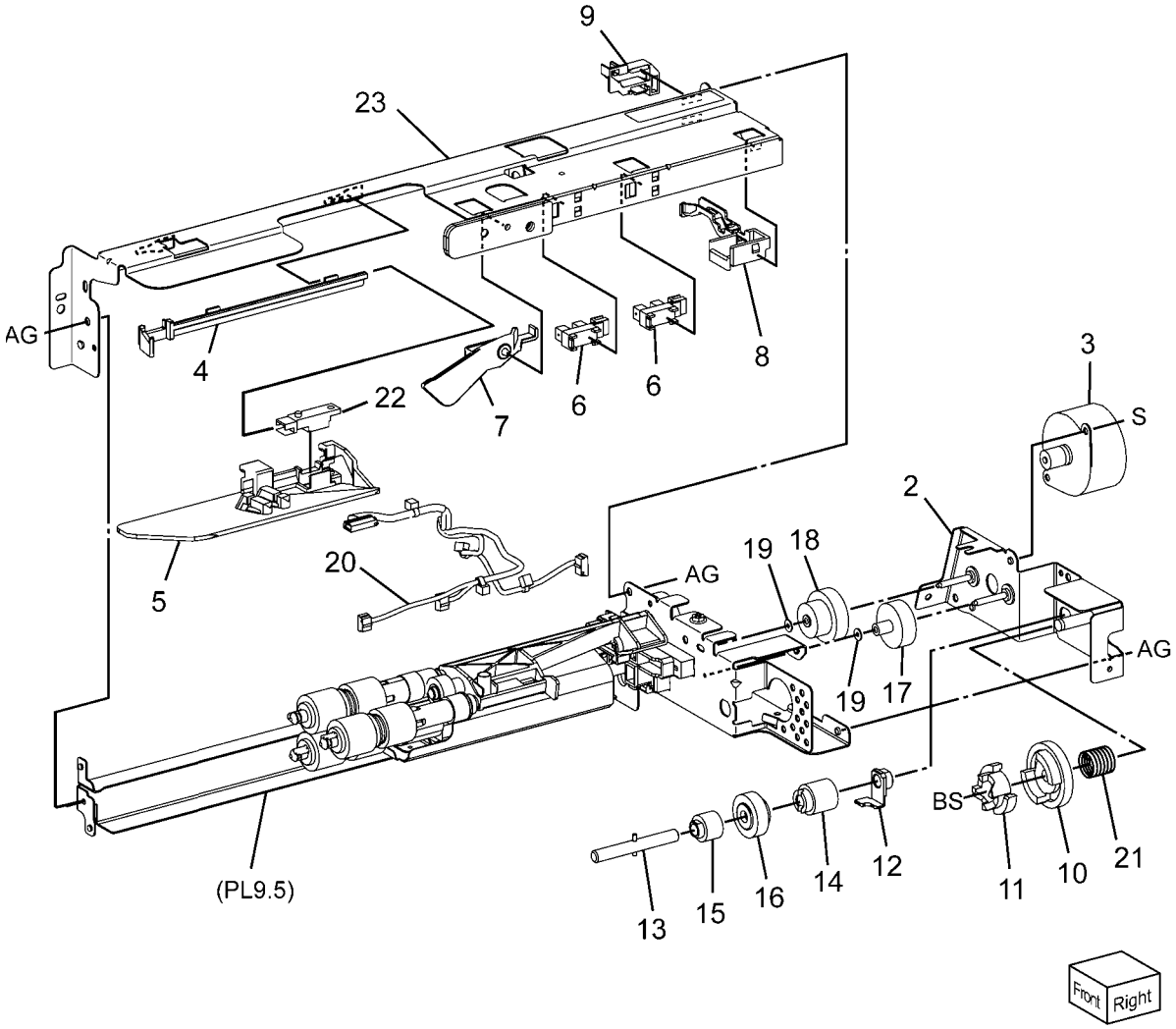

0509004B-NWD

PL 9.5 Tray 1 Feeder Assembly (2 of 2)

Item	Part	Description
1	–	Frame Assembly (P/O PL 9.3 Item 1)
2	604K56080	Feed/Nudger/Retard Roll Kit (3 Rolls/Kit) (REP 7.2)
3	–	Spring (P/O PL 9.3 Item 1)
4	–	Spring (P/O PL 9.3 Item 1)
5	–	Holder (P/O PL 9.3 Item 1)
6	–	Lever (P/O PL 9.3 Item 1)
7	–	Feed In Chute (P/O PL 9.3 Item 1)
8	–	Feed Shaft (P/O PL 9.3 Item 1)
9	–	Bearing (P/O PL 9.3 Item 1)
10	–	Sleeve Bearing (P/O PL 9.3 Item 1)
11	–	Helical Gear (30T) (P/O PL 9.3 Item 1)
12	–	Nudger Support (P/O PL 9.3 Item 1)
13	–	Spur Gear (29T) (P/O PL 9.3 Item 1)
14	–	Clutch Assembly (25T) (P/O PL 9.3 Item 1)
15	005K05890	One Way Clutch
16	–	Nudger Shaft (P/O PL 9.3 Item 1)
17	–	Gear (25T) (P/O PL 9.3 Item 1)
18	–	Retard Support (P/O PL 9.3 Item 1)
19	005K83300	Friction Clutch
20	014E45030	Spacer
21	–	Retard Shaft (P/O PL 9.3 Item 1)
22	–	Retard Bearing (P/O PL 9.3 Item 1)
23	–	Spring (P/O PL 9.3 Item 1)

PL 9.5

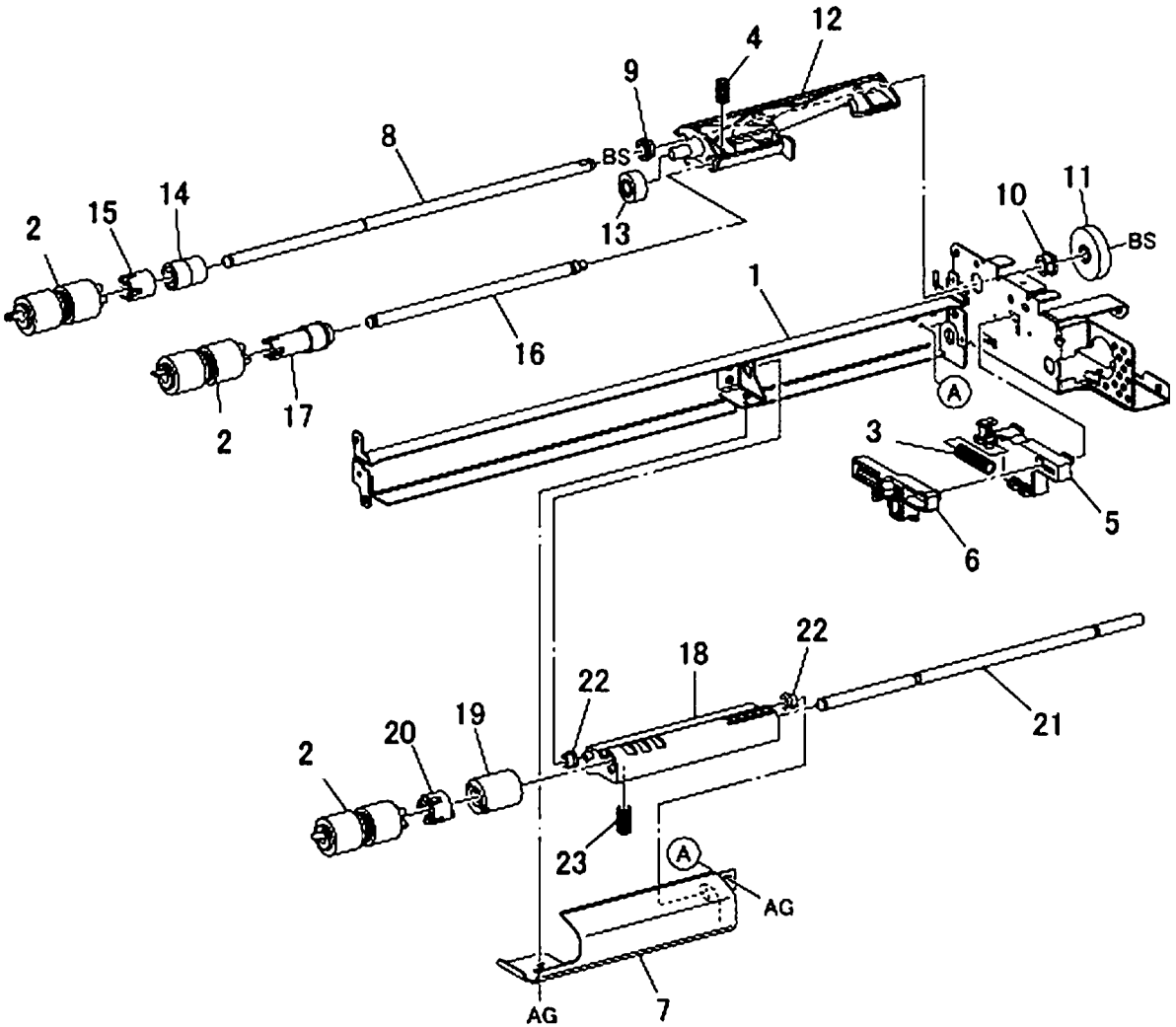

0509005A-NWD

PL 10.1 Three Tray Module

Item	Part	Description
1	059K67140	Tray 2, Tray 3, Tray 4 Feeder Assembly
2	–	Feeder Bracket (Not Spared)
3	054E35381	Feed Out Chute
4	050K61016	Tray 2, Tray 3, Tray 4 Unit
–	050K61018	Tray 2, Tray 3, Tray 4 Unit
5	059E03500	Roller
6	059E03510	Roller
7	003E75431	Stopper
8	110K11680	Paper Size Sensor
9	–	Cover (Not Spared)

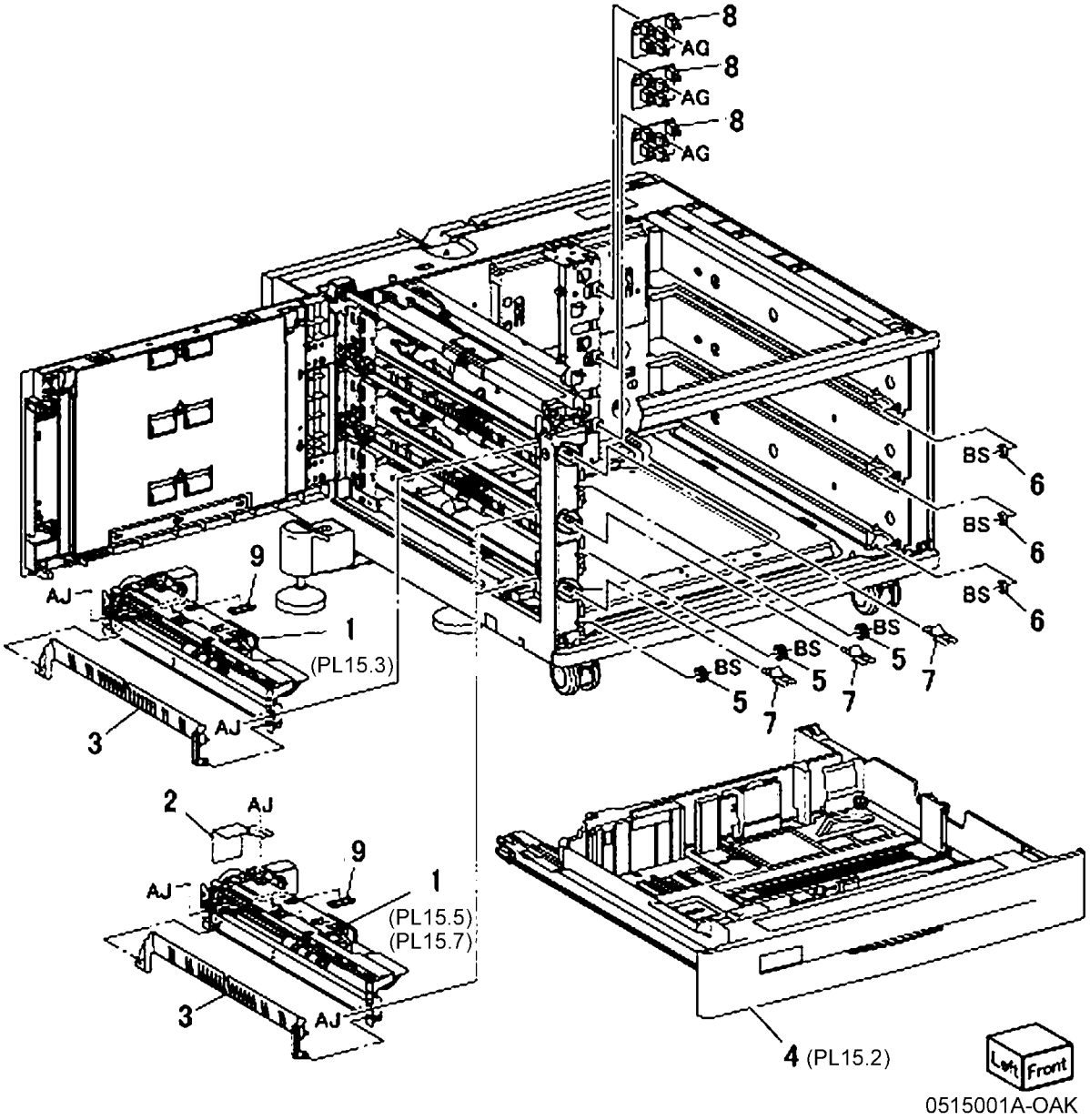

PL 10.2 Tray 2, 3, 4 Assembly

Item	Part	Description
1	–	Tray Assembly
2	–	Tray Frame (P/O PL 10.2 Item 1)
3	848E16762	Front Cover
4	011E21772	Lever
5	003E76330	Latch
6	809E80250	Spring
7	893E09490	Label (Max)
8	059E03522	Rear Roller
9	–	Slide Lock Block (P/O PL 10.1 Item 4)
10	–	Label (Instruction) (P/O PL 10.1 Item 4)
11	–	Tray Label (No 2, No 3, No 4) (Not Spared)

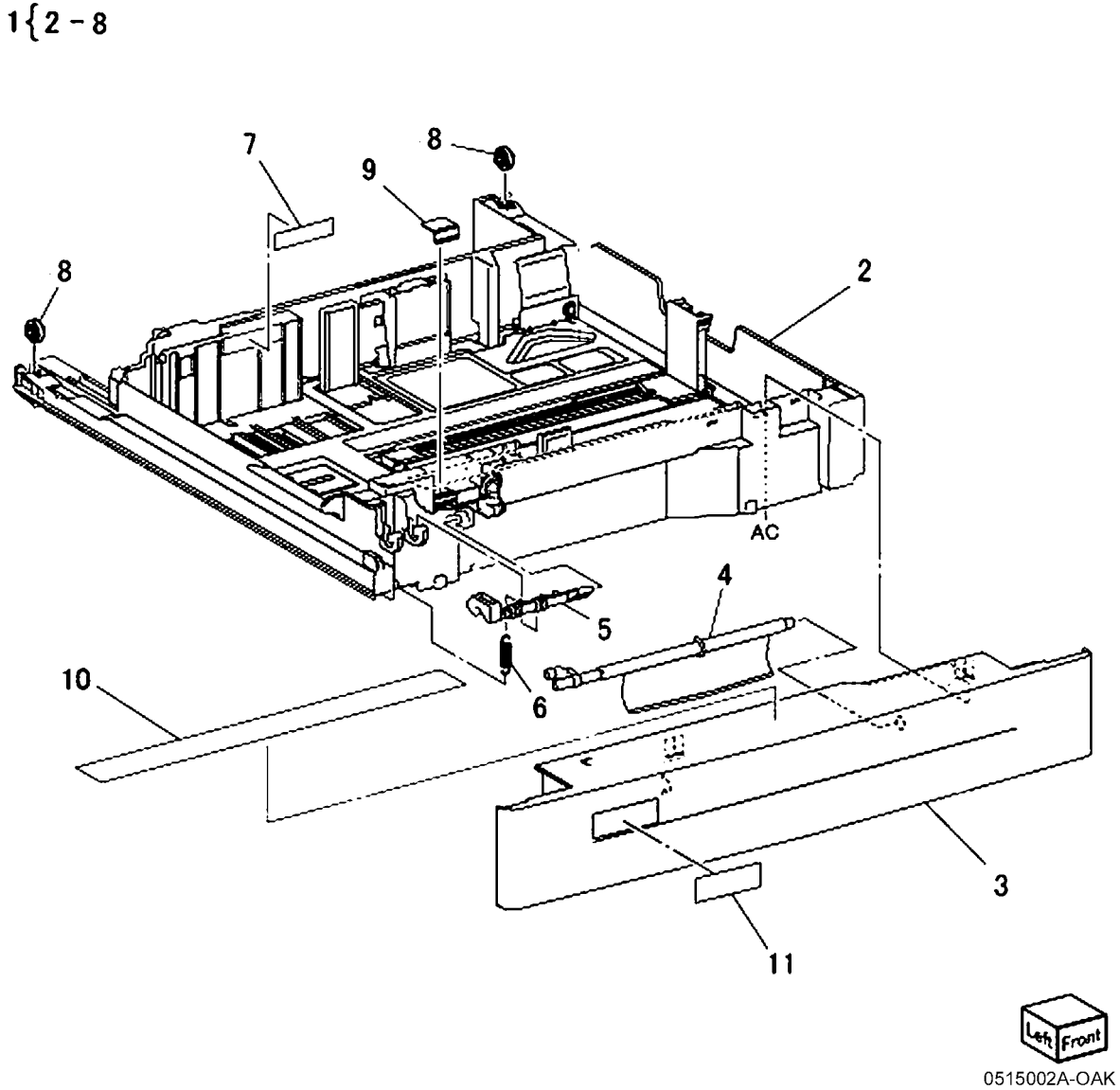

PL 10.3 Tray 2 Feeder Assembly (1 of 2)

Item	Part	Description
1	–	Upper Frame Assembly (P/O PL 10.1 Item 1)
2	068K53831	Drive Bracket Assembly
3	127K52790	Feed/Lift Up Motor Assembly
4	–	Rail (P/O PL 10.1 Item 1)
5	054E35360	Chute
6	930W00113	Nudger Level Sensor, No Paper Sensor
7	120E22481	Actuator
8	–	Upper Harness Holder (P/O PL 10.1 Item 1)
9	–	Rear Harness Holder (P/O PL 10.1 Item 1)
10	807E00390	Gear
11	014E44770	Spacer
12	013E26530	Shaft Bearing
13	–	Drive Shaft (P/O PL 10.3 Item 24)
14	807E00800	Gear
15	005K83081	One Way Clutch Assembly
16	007K98130	One Way Gear Assembly
17	807E20300	Helical Gear (25T)
18	–	Helical Gear (29T/19T) (P/O PL 10.1 Item 1)
19	–	Washer (P/O PL 10.1 Item 1)
20	–	Motor Harness Assembly (P/O PL 10.1 Item 1)
21	–	Sensor Motor Harness (P/O PL 10.1 Item 1)
22	–	Spring (P/O PL 10.1 Item 1)
23	–	Shaft Pin (P/O PL 10.3 Item 24)
24	006K23221	Drive Shaft Assembly

24 { 13, 23

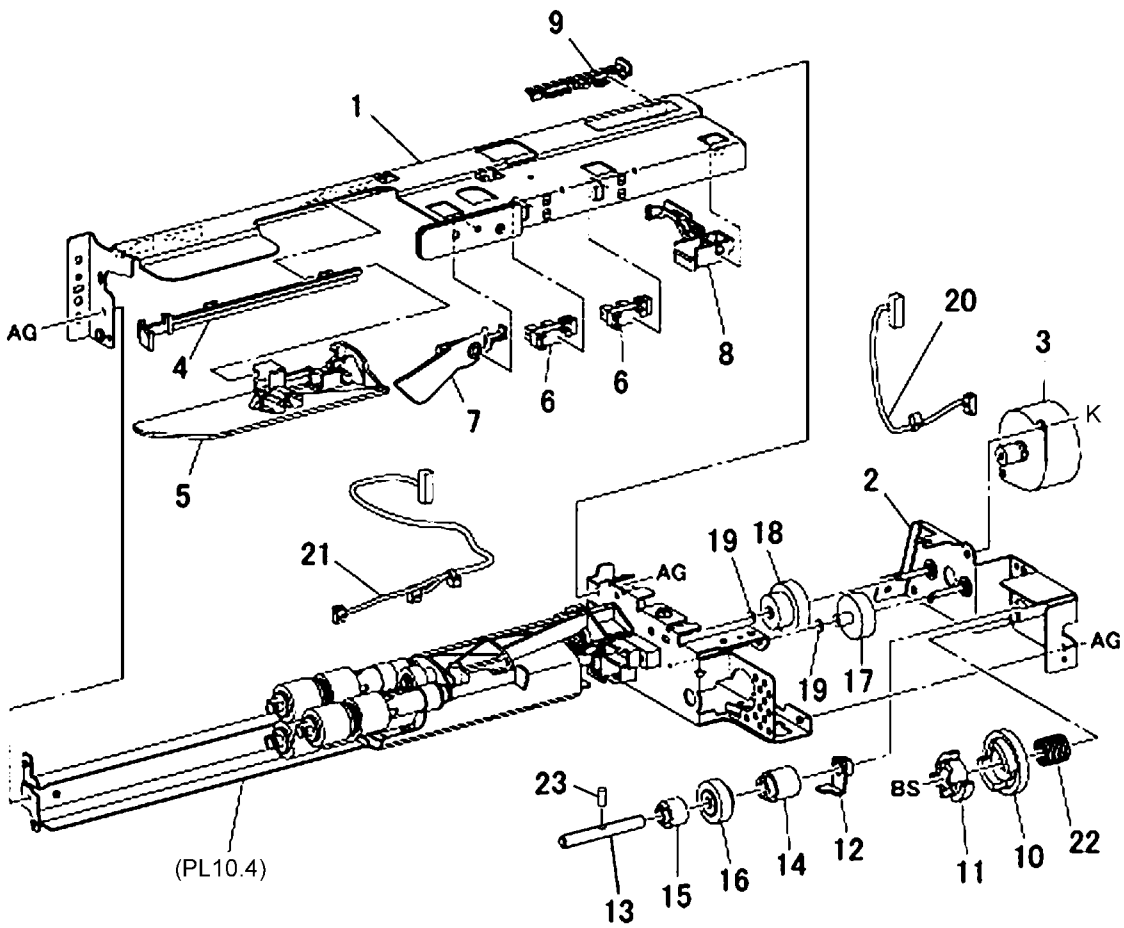

0515003A-OAK

PL 10.4 Tray 2 Feeder Assembly (2 of 2)

Item	Part	Description
1	–	Lower Frame Assembly (P/O PL 10.1 Item 1)
2	604K56080	Feed Roll, Nudger Roll, Retard Roll Kit (Qty 3 Per Kit)
3	–	Compression Lever Spring (P/O PL 10.1 Item 1)
4	–	Nudger Compression Spring (P/O PL 10.1 Item 1)
5	–	Holder (P/O PL 10.1 Item 1)
6	–	Lever (P/O PL 10.1 Item 1)
7	–	Feed In Chute (P/O PL 10.1 Item 1)
8	–	Feed Shaft (P/O PL 10.1 Item 1)
9	–	Bearing (P/O PL 10.1 Item 1)
10	413W11660	Plastic Bearing
11	–	Helical Gear (30T) (P/O PL 10.1 Item 1)
12	868E10820	Nudger Support
13	–	Spur Gear (29T) (P/O PL 10.1 Item 1)
14	005K08820	Clutch Assembly (25T)
15	005K10080	One Way Clutch Assembly
16	–	Nudger Shaft (P/O PL 10.1 Item 1)
17	–	Gear (P/O PL 10.1 Item 1)
18	–	Retard Support (P/O PL 10.1 Item 1)
19	–	Friction Clutch Assembly
20	014E45030	Spacer
21	–	Retard Shaft (P/O PL 15.1 Item 1)
22	–	Retard Bearing (P/O PL 10.1 Item 1)
23	–	Compression Retard Spring (P/O PL 15.1 Item 1)

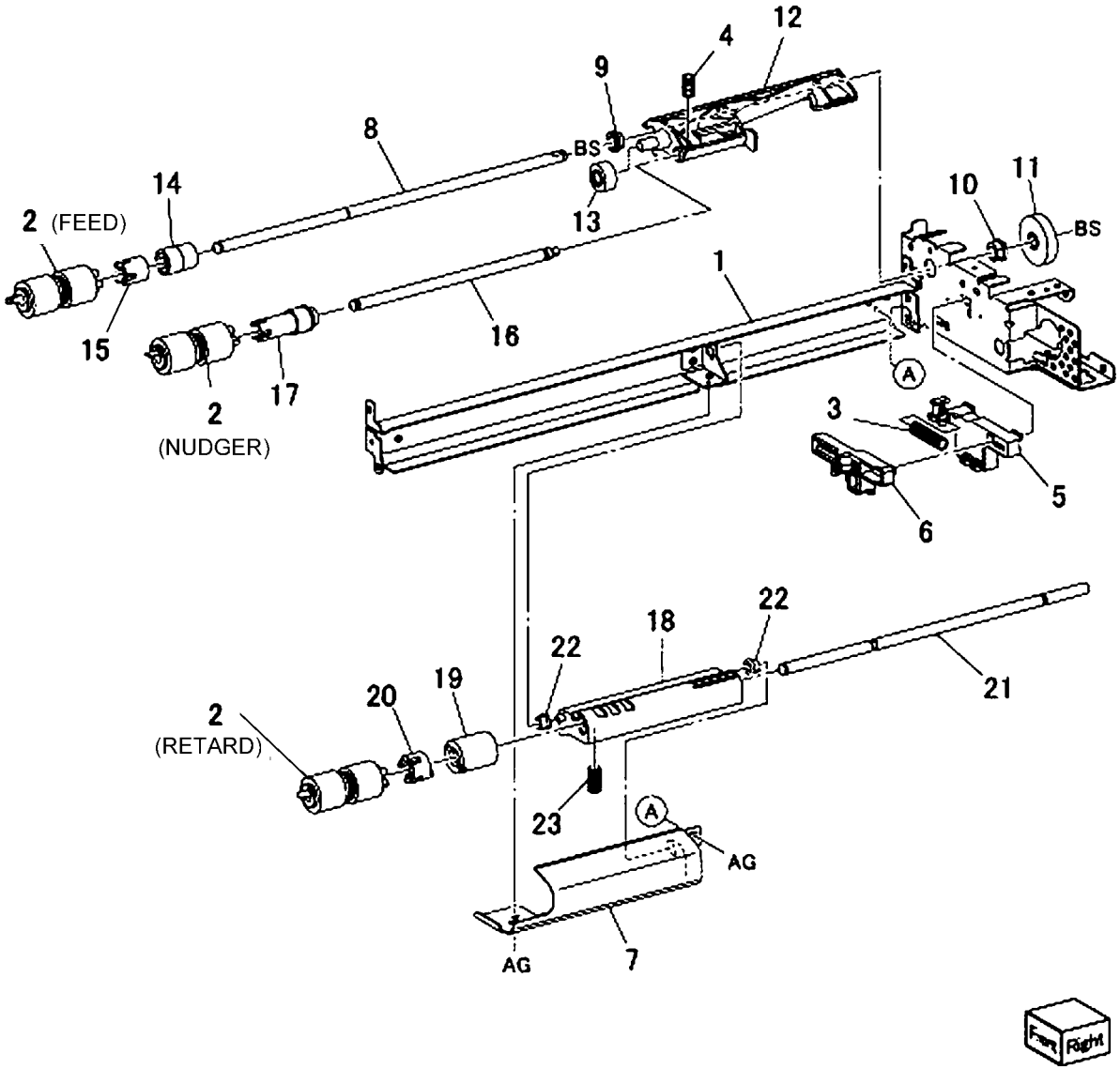

PL 10.5 Tray 3 Feeder Assembly (1 of 2)

Item	Part	Description
1	–	Upper Frame Assembly (P/O PL 10.1 Item 1)
2	068K53831	Drive Bracket Assembly
3	127K52790	Feed/Lift Up Motor Assembly
4	–	Rail (P/O PL 10.1 Item 1)
5	054E23461	Chute (P/O PL 10.1 Item 1)
6	930W00113	Nudger Level Sensor, No Paper Sensor
7	120E22481	Actuator
8	–	Upper Harness Holder (P/O PL 10.1 Item 1)
9	–	Rear Harness Holder (P/O PL 10.1 Item 1)
10	807E00390	Gear
11	014E44770	Spacer
12	013E26530	Shaft Bearing
13	006K23221	Drive Shaft Assembly
14	807E00800	Gear
15	005K83081	One Way Clutch Assembly
16	007K98130	One Way Gear Assembly
17	807E20300	Helical Gear (25T)
18	–	Helical Gear (29T/19T) (P/O PL 10.1 Item 1)
19	–	Washer (P/O PL 10.1 Item 1)
20	–	Motor Harness Assembly (P/O PL 10.1 Item 1)
21	–	Sensor Motor Harness (P/O PL 10.1 Item 1)
22	–	Spring (P/O PL 10.1 Item 1)

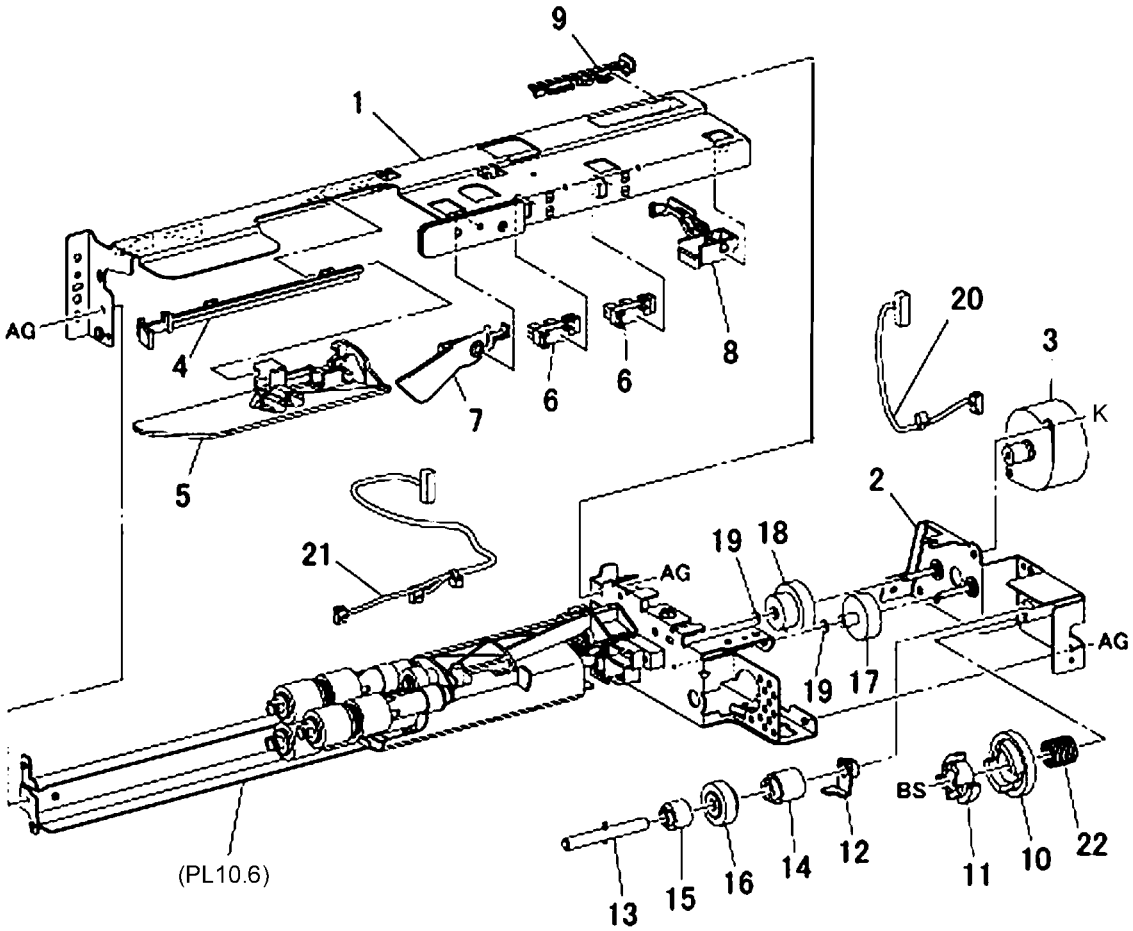

0515005A-OAK

PL 10.6 Tray 3 Feeder Assembly (2 of 2)

Item	Part	Description
1	–	Lower Frame Assembly (P/O PL 10.1 Item 1)
2	604K56080	Feed Roll, Nudger Roll, Retard Roll Kit (Qty 3 Per Kit)
3	–	Compression Lever Spring (P/O PL 10.1 Item 1)
4	–	Nudger Compression Spring (P/O PL 10.1 Item 1)
5	–	Holder (P/O PL 10.1 Item 1)
6	–	Lever (P/O PL 10.1 Item 1)
7	–	Feed In Chute (P/O PL 10.1 Item 1)
8	–	Feed Shaft (P/O PL 10.1 Item 1)
9	–	Bearing (P/O PL 10.1 Item 1)
10	413W11660	Plastic Bearing
11	–	Helical Gear (30T) (P/O PL 10.1 Item 1)
12	868E10820	Nudger Support
13	–	Spur Gear (29T) (P/O PL 10.1 Item 1)
14	005K08820	Clutch Assembly (25T)
15	005K10080	One Way Clutch Assembly
16	–	Nudger Shaft (P/O PL 10.1 Item 1)
17	–	Gear (P/O PL 15.1 Item 1)
18	–	Retard Support (P/O PL 10.1 Item 1)
19	–	Friction Clutch Assembly (P/O PL 10.1 Item 1)
20	014E45030	Spacer
21	–	Retard Shaft (P/O PL 10.1 Item 1)
22	–	Retard Bearing (P/O PL 10.1 Item 1)
23	–	Compression Retard Spring (P/O PL 10.1 Item 1)

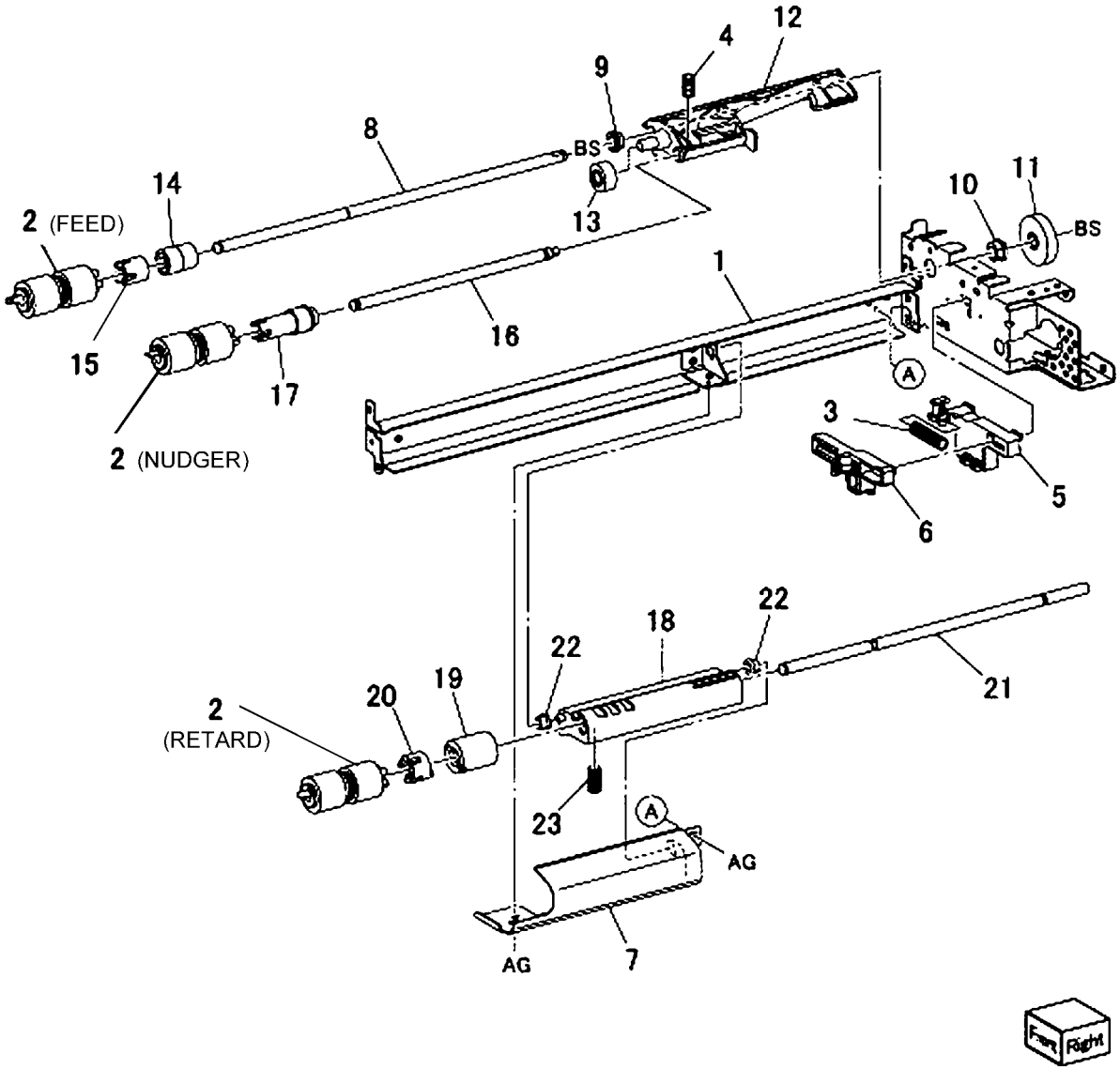

PL 10.7 Tray 4 Feeder Assembly (1 of 2)

Item	Part	Description
1	–	Upper Frame Assembly (P/O PL 10.1 Item 1)
2	068K53831	Drive Bracket Assembly
3	127K52790	Feed/Lift Up Motor Assembly
4	–	Rail (P/O PL 10.1 Item 1)
5	054E23461	Chute (P/O PL 10.1 Item 1)
6	930W00113	Nudger Level Sensor, No Paper Sensor
7	120E22481	Actuator
8	–	Upper Harness Holder (P/O PL 10.1 Item 1)
9	–	Rear Harness Holder (P/O PL 10.1 Item 1)
10	807E00390	Gear
11	014E44770	Spacer
12	013E26530	Shaft Bearing
13	006K23221	Drive Shaft Assembly
14	807E00800	Gear
15	005K83081	One Way Clutch Assembly
16	007K98130	One Way Gear Assembly
17	807E20300	Helical Gear (25T)
18	–	Helical Gear (29T/19T) (P/O PL 10.1 Item 1)
19	–	Washer (P/O PL 10.1 Item 1)
20	–	Motor Harness Assembly (P/O PL 10.1 Item 1)
21	–	Sensor Motor Harness (P/O PL 10.1 Item 1)
22	–	Spring (P/O PL 10.1 Item 1)

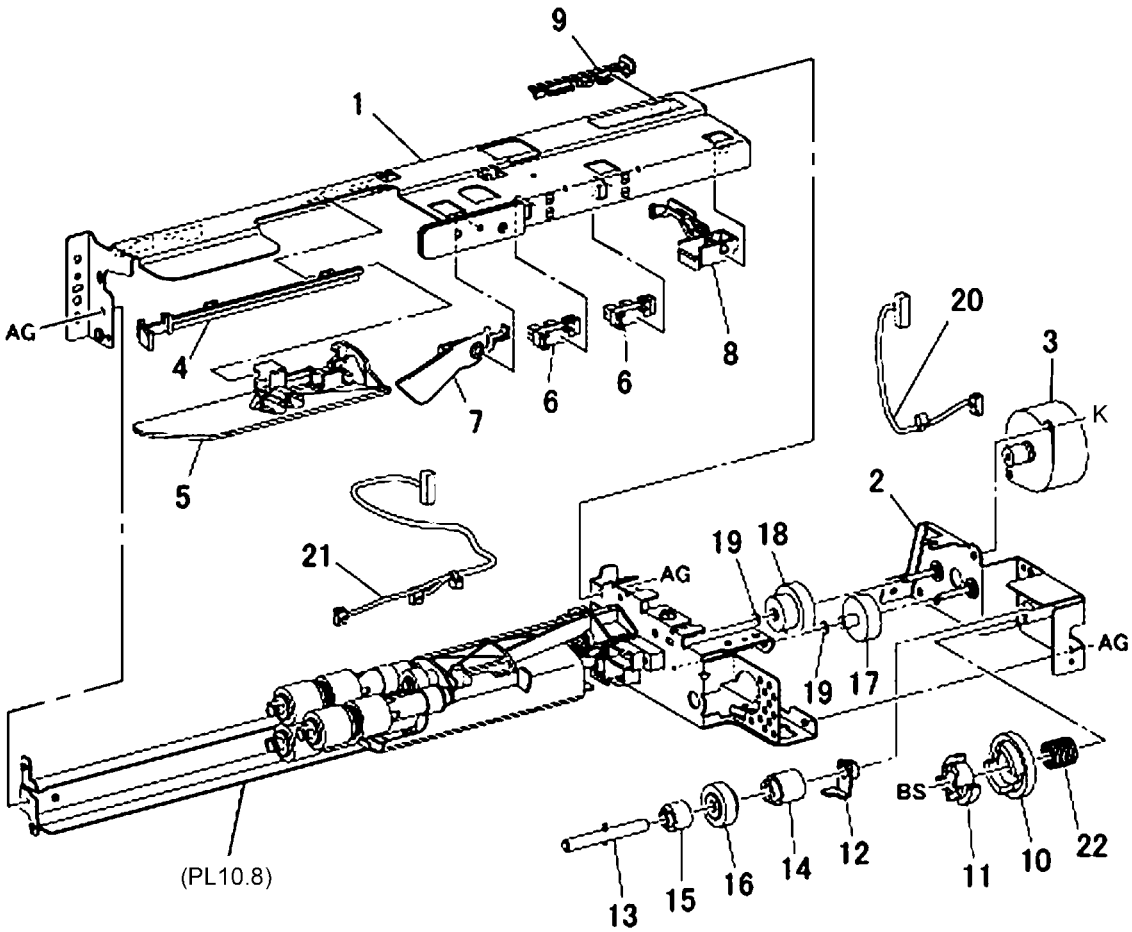

0515007A-OAK

PL 10.8 Tray 4 Feeder Assembly (2 of 2)

Item	Part	Description
1	–	Lower Frame Assembly
2	604K56080	Feed Roll, Nudger Roll, Retard Roll Kit (Qty 3 Per Kit)
3	–	Compression Lever Spring (P/O PL 10.1 Item 1)
4	–	Nudger Compression Spring (P/O PL 10.1 Item 1)
5	–	Holder (P/O PL 10.1 Item 1)
6	–	Lever (P/O PL 10.1 Item 1)
7	–	Feed In Chute (P/O PL 10.1 Item 1)
8	–	Feed Shaft (P/O PL 10.1 Item 1)
9	–	Bearing (P/O PL 10.1 Item 1)
10	413W11660	Plastic Bearing
11	–	Helical Gear (30T) (P/O PL 10.1 Item 1)
12	868E10820	Nudger Support
13	–	Spur Gear (29T) (P/O PL 10.1 Item 1)
14	005K08820	Clutch Assembly (25T)
15	005K10080	One Way Clutch Assembly
16	–	Nudger Shaft (P/O PL 10.1 Item 1)
17	–	Gear (P/O PL 10.1 Item 1)
18	–	Retard Support (P/O PL 10.1 Item 1)
19	–	Friction Clutch Assembly (P/O PL 10.1 Item 1)
20	014E45030	Spacer
21	–	Retard Shaft (P/O PL 10.1 Item 1)
22	–	Retard Bearing (P/O PL 10.1 Item 1)
23	–	Compression Retard Spring (P/O PL 10.1 Item 1)

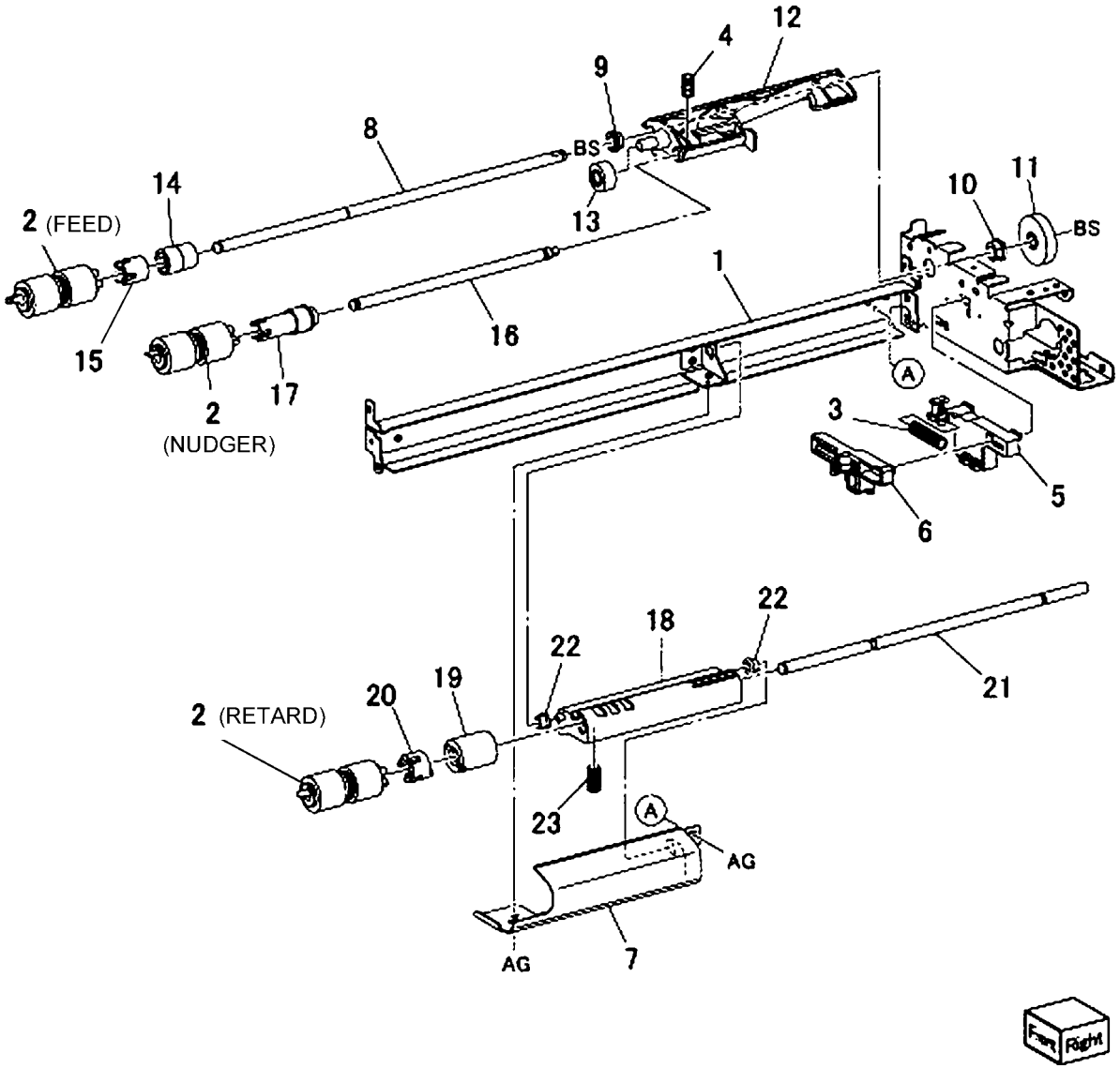

0515008A-OAK

PL 10.9 Electrical

Item	Part	Description
1	960K54152	Tray Module PWB
2	807E20700	Gear (34T)
3	807E20720	Gear (39T)
4	127K60810	Take Away Motor
5	962K59522	Sensor Harness Assembly
6	962K87340	Harness Assembly
7	–	I/F Harness (Not Spared)
8	–	Clamp (Not Spared)
9	–	Take Away Motor 2 Assembly

PL 10.9

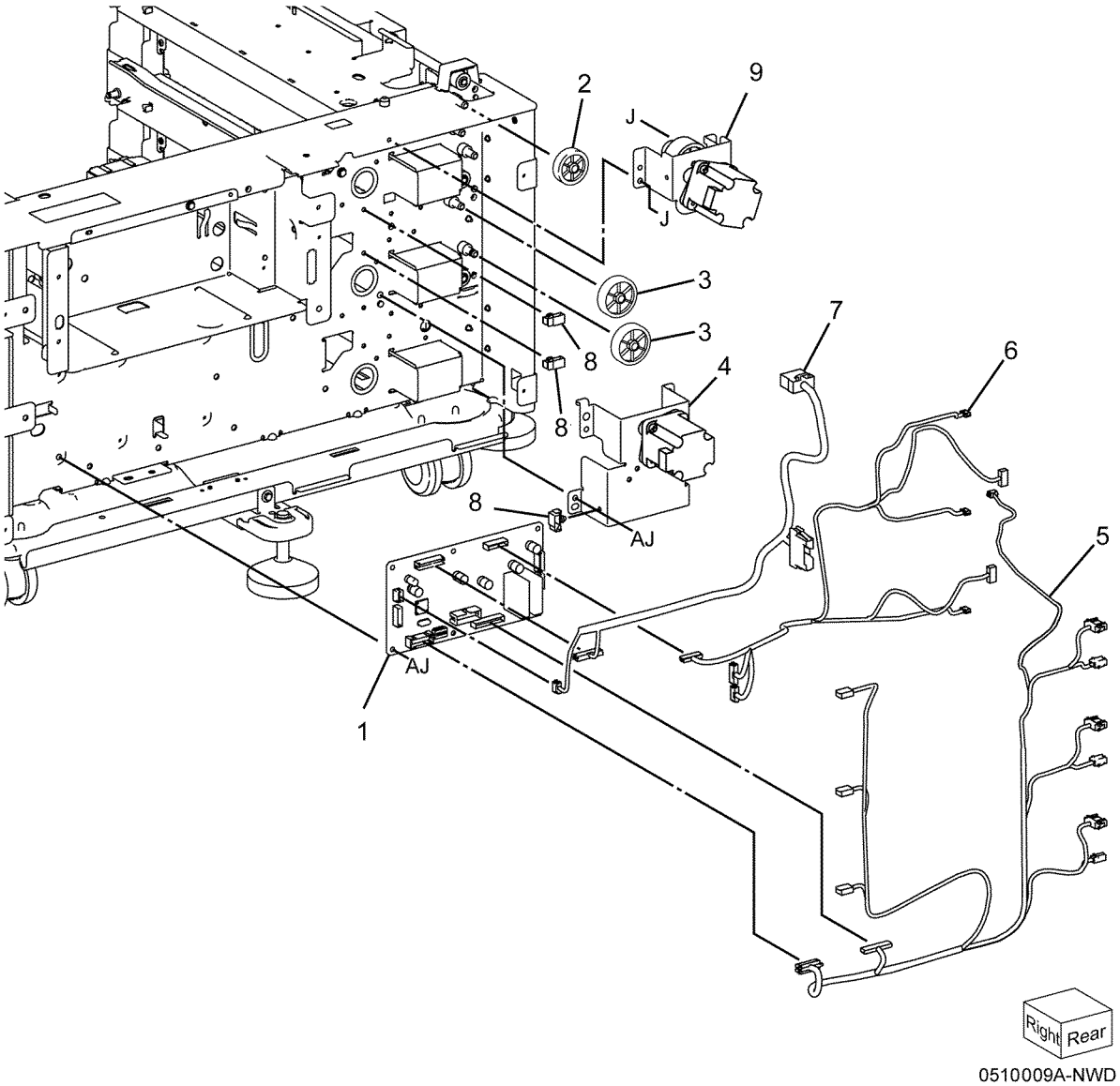

PL 10.12 Roller

Item	Part	Description
1	848E12671	Cover
2	110E12220	L/H Switch
3	962K59480	Harness Assembly
4	054K34144	Chute Assembly
5	–	Chute (P/O PL 10.12 Item 4)
6	930W00111	Tray 3 Feed Out Sensor, Tray 4 Feed Out Sensor
7	120E29731	Actuator Sensor
8	809E82720	Spring
9	–	Harness Assembly (Not Spared)
10	032E27970	Guide
11	130K64121	Tray 2 Feed Out Sensor
12	054E34301	Takeaway Chute
13	059K60191	Roll Assembly
14	413W14860	Bearing
15	120E18070	Clamp

4 { 5 - 9

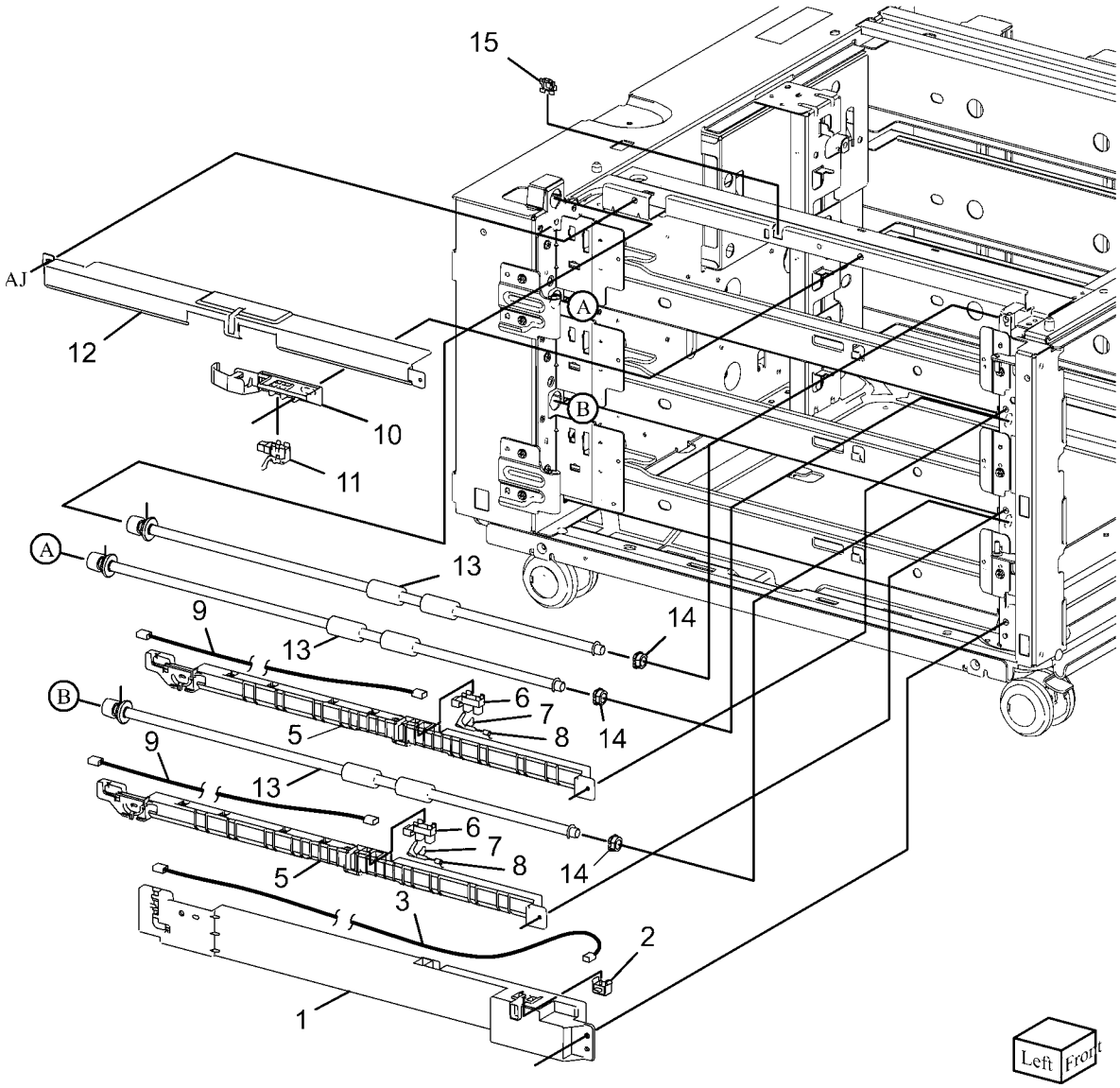

0515011B-NWD

PL 10.13 Left Hand Cover Assembly

Item	Part	Description
1	848K16851	Left Hand Cover Assembly (Not Spared)
2	019E69600	Hook
3	003E75591	Latch
4	–	Spring Pinch (P/O PL 10.13 Item 1)
5	–	Left Hand Chute Low (P/O PL 10.13 Item 1)
6	068K55791	Bracket Assembly
7	–	Spring (P/O PL 10.13 Item 1)
8	–	Pinch Shaft (P/O PL 10.13 Item 1)
9	059E99240	Pinch Roll
10	–	Left Hand Cover (P/O PL 10.13 Item 1)
11	003E75571	Handle
12	–	Pinch Bearing (Not Spared)
13	068K55701	Upper Bracket Assembly
14	–	Lower Bracket Assembly (Not Spared)
15	–	Hinge (Not Spared)

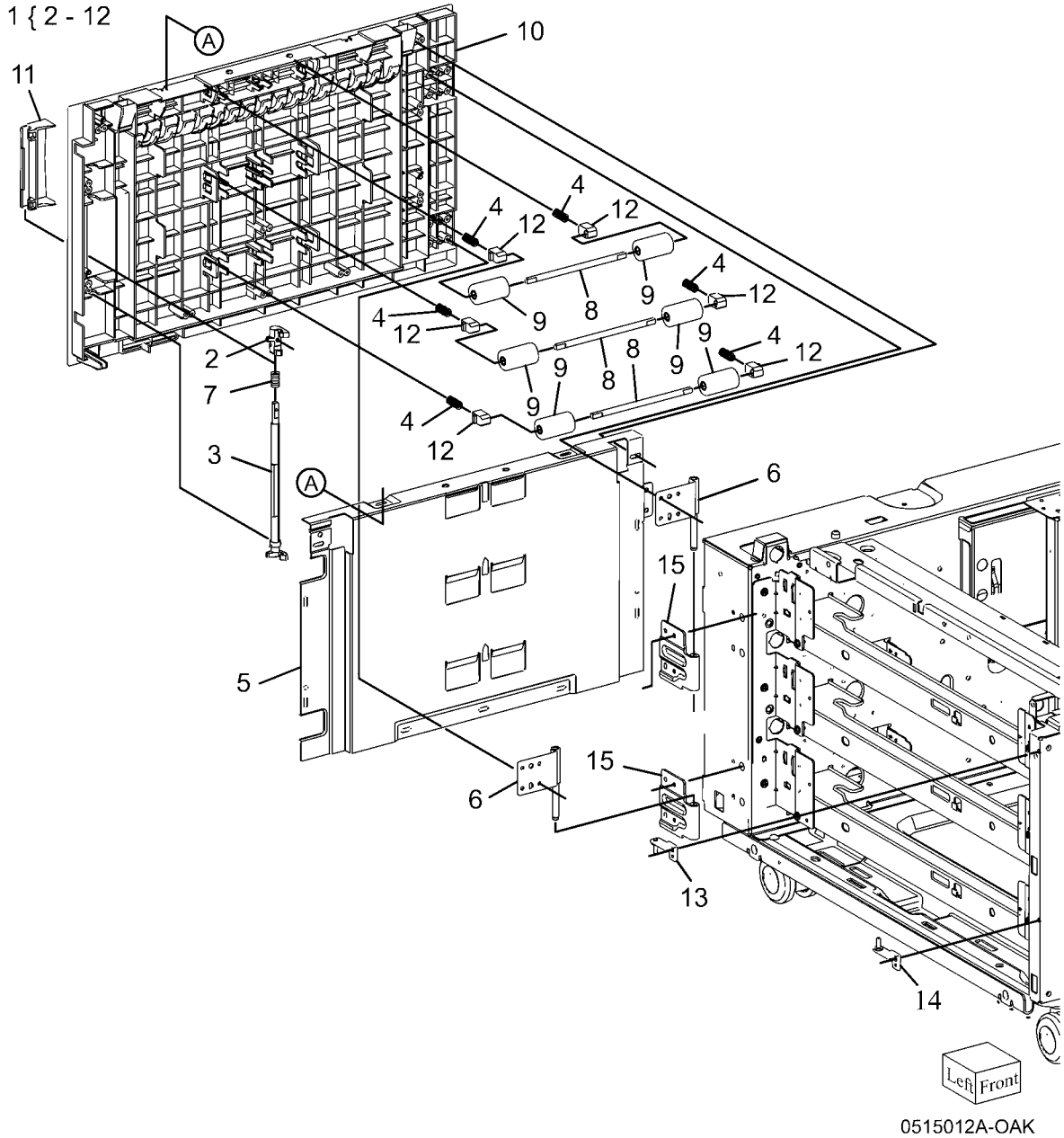

PL 10.14 Covers

Item	Part	Description
1	017K94590	Adjuster Foot Assembly
2	848E27150	Cover Foot L
3	–	Bracket Foot L
4	–	Left Cover (Not Spared)
5	–	Right Cover (Not Spared)
6	–	Cover Foot
7	–	Foot Bracket (Not Spared)
8	–	Foot Cover (Not Spared)
9	–	Bracket Docking (Not Spared)
10	017K94580	Locking Caster Assembly
11	017K94570	Caster Assembly
12	–	Bracket BBQ Right
13	848K23191	Rear Cover Assembly
14	–	Rear Cover (P/O PL 10.14 Item 13)
15	–	Rear Cover Insert (P/O PL 10.14 Item 13)
16	–	Left Cover (Not Spared)
17	–	Top Cover (Not Spared)
18	–	Bracket BBQ Left (Not Spared)

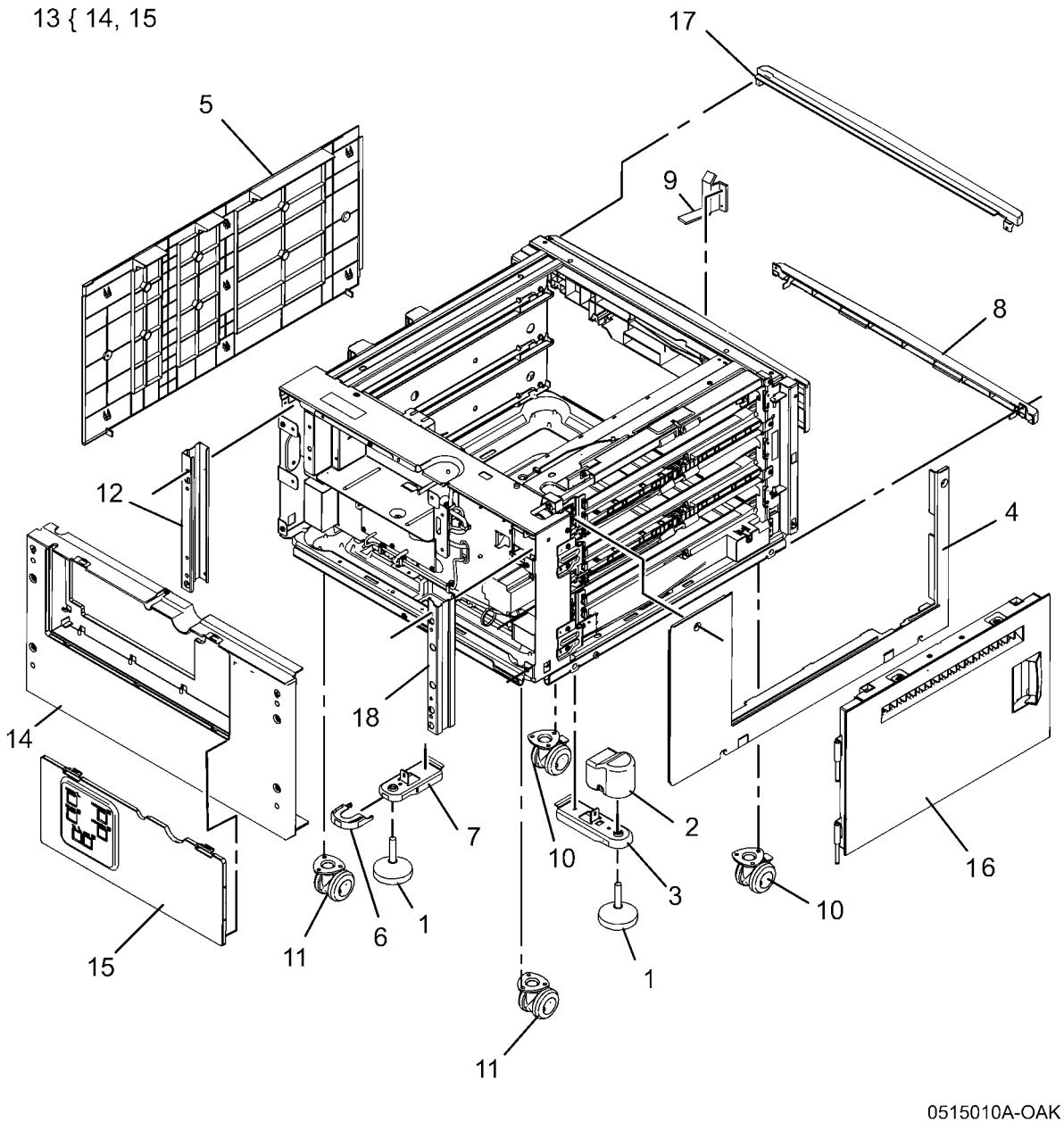

PL 11.1 Tray 2/3/4 Assembly

Item	Part	Description
1	050K66710	Tray 4 Assembly (REP 7.11)
2	–	Tray 4 (P/O PL 11.1 Item 1)
3	–	Tray 4 Cover (P/O PL 11.1 Item 14)
4	–	Lever (P/O PL 11.1 Item 14)
5	–	Link (P/O PL 11.1 Item 14)
6	–	Link (P/O PL 11.1 Item 14)
7	–	Spring (P/O PL 11.1 Item 14)
8	–	Latch (P/O PL 11.1 Item 14)
9	–	Cover (P/O PL 11.1 Item 14)
10	–	Transport Bracket (P/O PL 11.1 Item 14)
11	–	Label (Instruction) (P/O PL 11.1 Item 1)
12	–	Label (Tray No 4) (P/O PL 11.1 Item 1)
13	–	Label (P/O PL 11.1 Item 1)
14	848K20080	Tray 4 Cover
15	050K66700	Tray 3 Assembly
16	–	Tray 3 (P/O PL 11.1 Item 15)
17	–	Tray 3 Cover (P/O PL 11.1 Item 15)
18	–	Label (Tray No.3) (P/O PL 11.1 Item 15)
19	848K20090	Tray 3 Cover
20	050K65255	Tray 2 Assembly

PL11.1

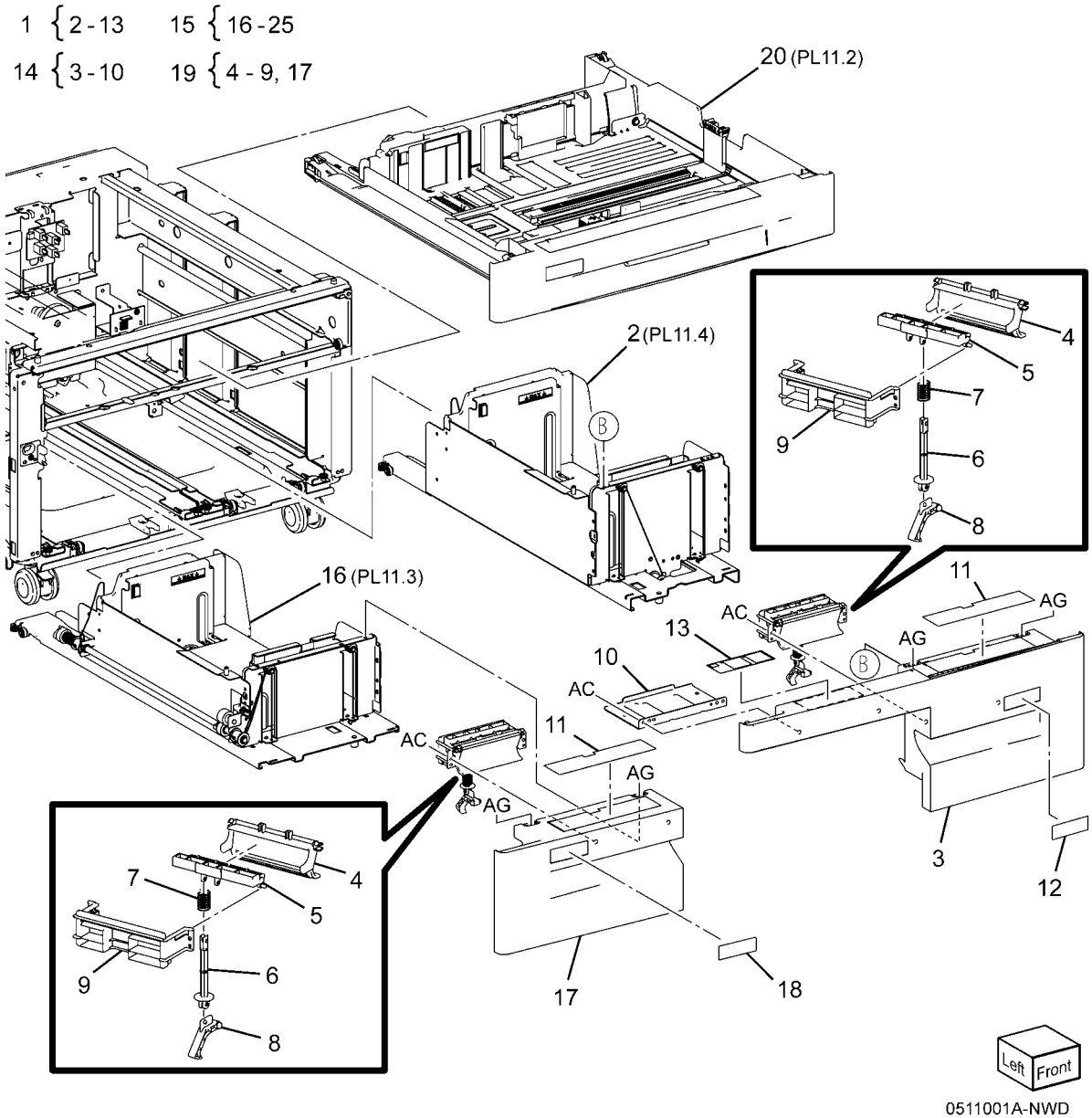

PL 11.2 Tray 2

Item	Part	Description
1	050K65255	Tray 2 Assembly
2	–	Tray Assembly (P/O PL 11.2 Item 1)
3	848E16761	Front Cover
4	011E24092	Lever
5	003E76330	Latch
6	809E80250	Spring
7	893E09490	Lab (Max)
8	059E03522	Rear Roller
9	007E78431	Gear (13T)
10	007E78450	Gear (13T/60T)
11	007E78441	Gear (60T)
12	807E13520	Pinion
13	–	Link (P/O PL 11.2 Item 1)
14	120E29831	End Actuator
15	–	Bottom Plate (P/O PL 11.2 Item 1)
16	014E45291	Slide Lock Block
17	–	Label (Tray No.2) (Not Spared)
18	–	Label (Instruction) (Not Spared)

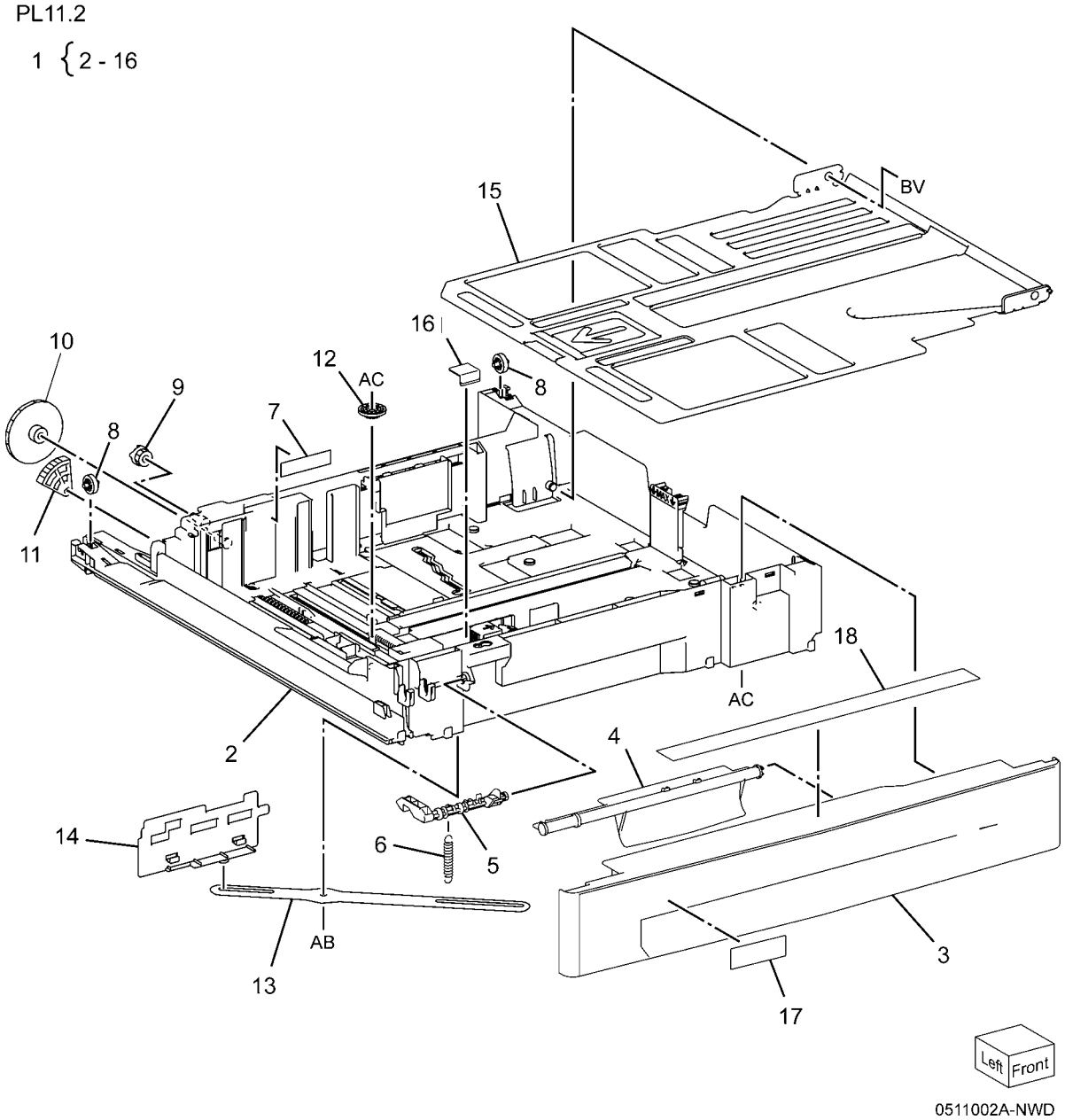

PL 11.3 Tray 3

Item	Part	Description
1	–	Base Tray (P/O PL 11.1 Item 15)
2	–	Size Actuator (P/O PL 11.1 Item 15)
3	–	Side Rear Guide (P/O PL 11.1 Item 15)
4	–	Side Front Guide (P/O PL 11.1 Item 15)
5	–	Knob (P/O PL 11.1 Item 15)
6	–	Knob Assembly (P/O PL 11.1 Item 15)
7	–	Spring (P/O PL 11.1 Item 15)
8	–	Bracket (P/O PL 11.1 Item 15)
9	–	Rack Gear (P/O PL 11.1 Item 15)
10	–	Pinion (P/O PL 11.1 Item 15)
11	–	Pulley (P/O PL 11.1 Item 15)
12	–	Pulley (P/O PL 11.1 Item 15)
13	–	Pulley (P/O PL 11.1 Item 15)
14	–	Gasket (P/O PL 11.1 Item 15)
15	–	Bottom Plate (P/O PL 11.1 Item 15)
16	019K93921	Brake
17	893E09490	Label (Max)
18	019E71680	Pad
19	012E11112	Front Left Cable
20	012E11122	Front Right Cable
21	012E11101	Cable (Rear)
22	–	Lift Shaft (P/O PL 11.1 Item 15)
23	032E20890	Cable Guide
24	032E27990	Cable Guide
25	059E05060	Side Roll
26	059E05040	Lower Roll

PL11.3

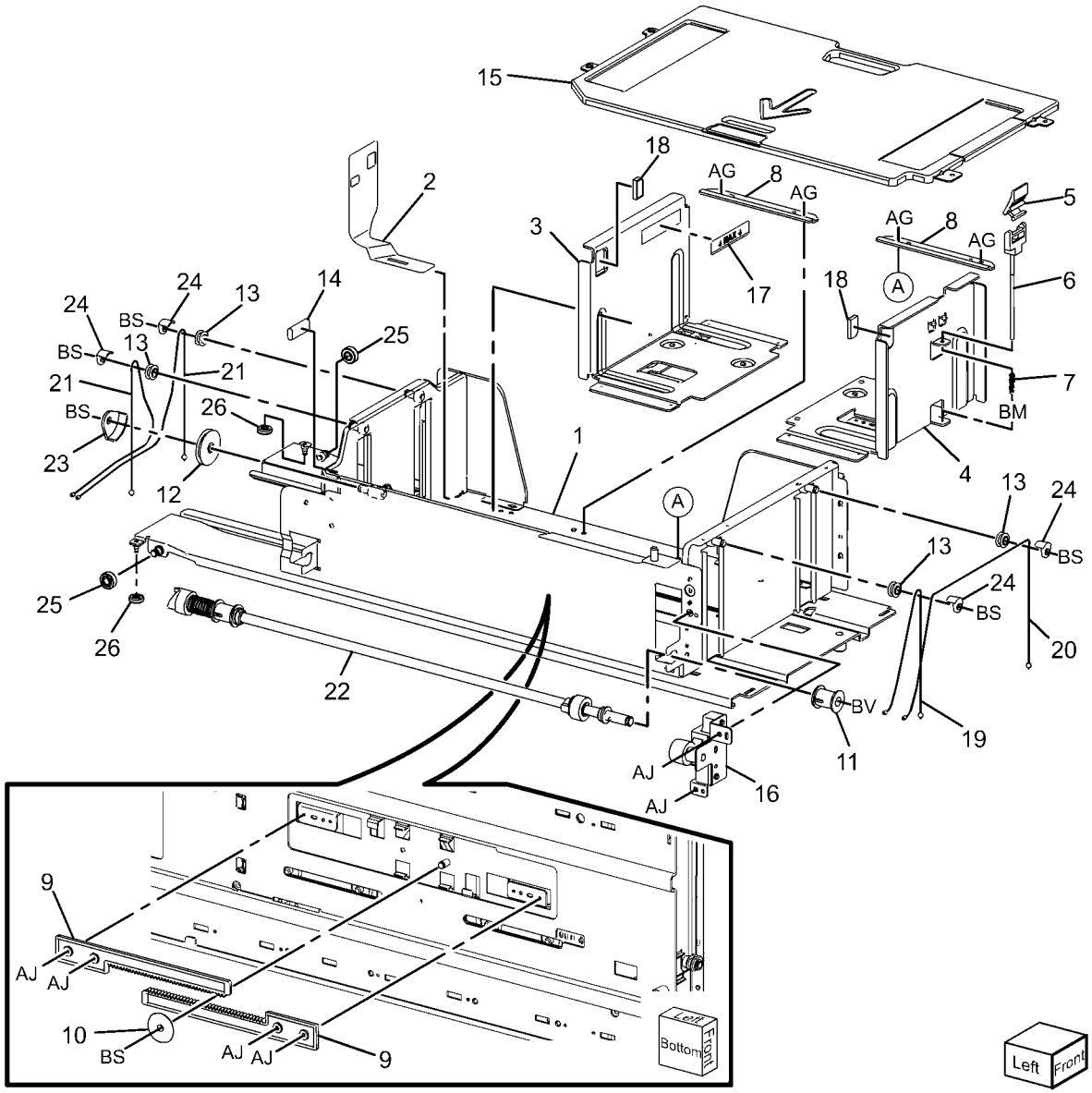

0511003A-NWD

PL 11.4 Tray 4

Item	Part	Description
1	–	Base Tray (P/O PL 11.1 Item 1)
2	–	Side Rear Guide (P/O PL 11.1 Item 1)
3	–	Side Front Guide (P/O PL 11.1 Item 1)
4	–	Knob (P/O PL 11.1 Item 1)
5	003K87450	Knob Assembly
6	–	Spring (P/O PL 11.1 Item 1)
7	019K93921	Brake
8	–	Bottom Plate (P/O PL 11.1 Item 1)
9	006K86350	Lift Shaft
10	–	Rack Gear (P/O PL 11.1 Item 1)
11	007E78190	Pinion
12	007E78390	Gear
13	–	Bracket (P/O PL 11.1 Item 1)
14	019E71680	Pad (P/O PL 11.1 Item 1)
15	–	Pulley (P/O PL 11.1 Item 1)
16	–	Pulley (P/O PL 11.1 Item 1)
17	604K20740	Cable Guide
18	012E11141	Front Cable
19	012E11131	Rear Cable
20	–	Size Actuator (P/O PL 11.1 Item 1)
21	893E09490	Label (Max)
22	–	Gasket (P/O PL 11.1 Item 1)
23	–	Lower Roll (P/O PL 11.1 Item 1)
24	–	Side Roll (P/O PL 11.1 Item 1)

PL11.4

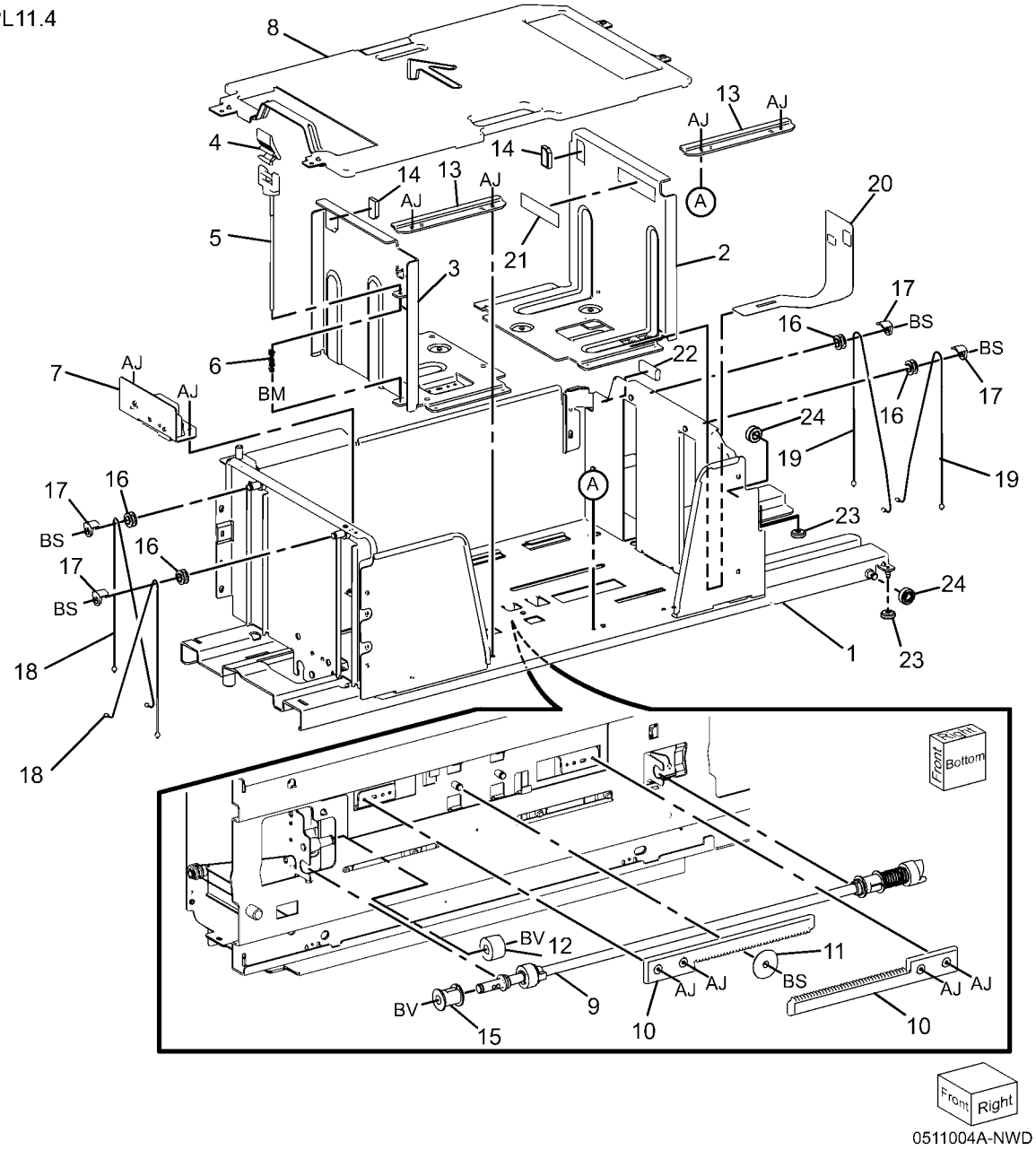

0511004A-NWD

PL 11.5 Tray 4 Paper Feed

Item	Part	Description
1	059K66621	Tray 4 Feeder (REP 7.13)
2	–	Bracket (Not Spared)
3	–	Bracket (Not Spared)
4	054E34200	Lower Chute
5	054E34210	Upper Chute
6	930W00212	Tray 4 Feed Out Sensor
7	962K77651	Sensor Wire Harness
8	–	Motor Wire Harness
9	–	Cover (Not Spared)
10	–	Stud Bracket (Not Spared)
11	059K54320	Tray 4 Transport Assembly
12	–	Transport Rail (P/O PL 11.5 Item 11)
13	–	Lower Chute (P/O PL 11.5 Item 11)
14	059K54330	Tray 4 Transport Roll
15	–	Bearing (P/O PL 11.5 Item 11)
16	059E98860	Pinch Roll
17	–	Bearing (P/O PL 11.5 Item 11)
18	–	Bearing (P/O PL 11.5 Item 11)
19	–	Spring (P/O PL 11.5 Item 11)
20	–	Cover (P/O PL 11.5 Item 11)
21	054E23510	Upper Chute
22	–	Label (P/O PL 11.5 Item 11)
23	–	Spacer (P/O PL 11.5 Item 11)

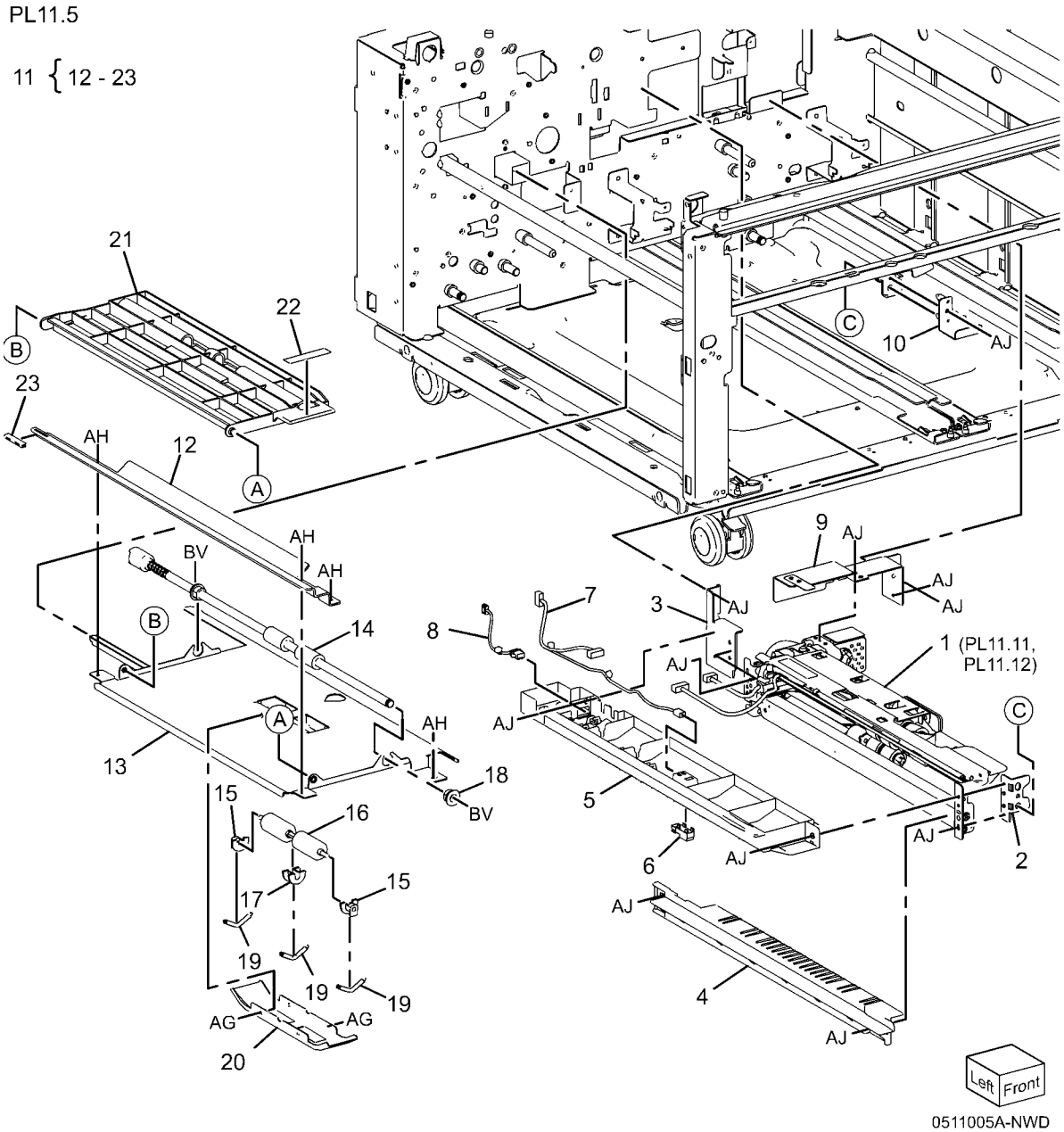

PL 11.6 Tray 2/3 Paper Feed

Item	Part	Description
1	–	Chute (Not Spared)
2	930W00111	Tray 3 Feed Out Sensor
3	–	Actuator (Not Spared)
4	809E82720	Spring
5	962K59462	Wire Harness (Not Spared)
6	–	Sensor Guide
7	130K64121	Tray 2 Feed Out sensor
8	054E34301	Chute
9	413W88650	Ball Bearing
10	059K67140	Tray 2 Feeder
11	054E36441	Feed Out Chute
12	–	Sensor Cover (Not Spared)
13	059K66621	Tray 3 Feeder
14	–	Feed Out Chute (Not Spared)
15	–	Cover (Not Spared)
16	054E39560	Lower Chute
17	059K60191	Takeaway Roll Assembly
18	–	Clamp (Not Spared)

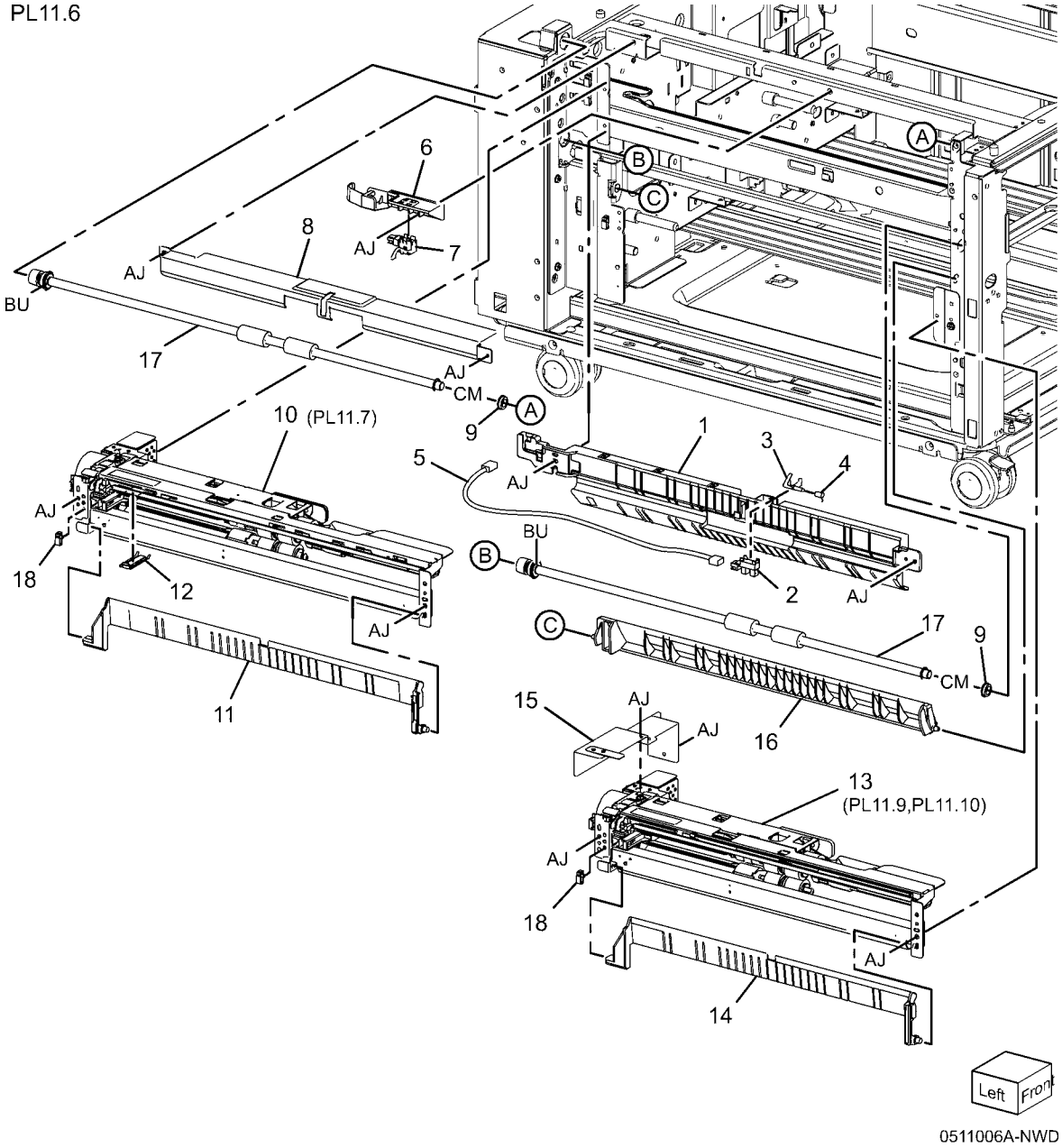

PL 11.7 Tray 2 Feeder (1 of 2)

Item	Part	Description
1	–	Upper Frame Assembly (P/O PL 11.6 Item 10)
2	–	Drive Bracket Assembly (P/O PL 11.6 Item 10)
3	127K52790	Tray 2 Feed/Lift UP Motor
4	801E03601	Rail
5	–	Chute (P/O PL 11.6 Item 10)
6	930W00113	Tray 2 Nudge Level, Paper Sensor
7	120E22481	Actuator
8	–	Upper Harness Holder (P/O PL 11.6 Item 10)
9	–	Rear Harness Holder (Not Spared)
10	807E00390	Gear (31T)
11	014E44770	Spacer
12	013E26530	Bearing
13	006K23221	Drive Shaft
14	807E00800	Gear (13T)
15	005K83081	One Way Clutch
16	007K97870	One Way Gear
17	807E20300	Helical Gear (25T)
18	807E20310	Helical Gear (29T/19T)
19	–	Washer (P/O PL 11.6 Item 10)
20	–	Harness Assembly (P/O PL 11.6 Item 10)
21	–	Sensor Harness Assembly (P/O PL 11.6 Item 10)
22	–	Spring (P/O PL 11.6 Item 10)
23	–	Roll Assembly (P/O PL 11.6 Item 10)
24	–	Clamp (P/O PL 11.6 Item 10)

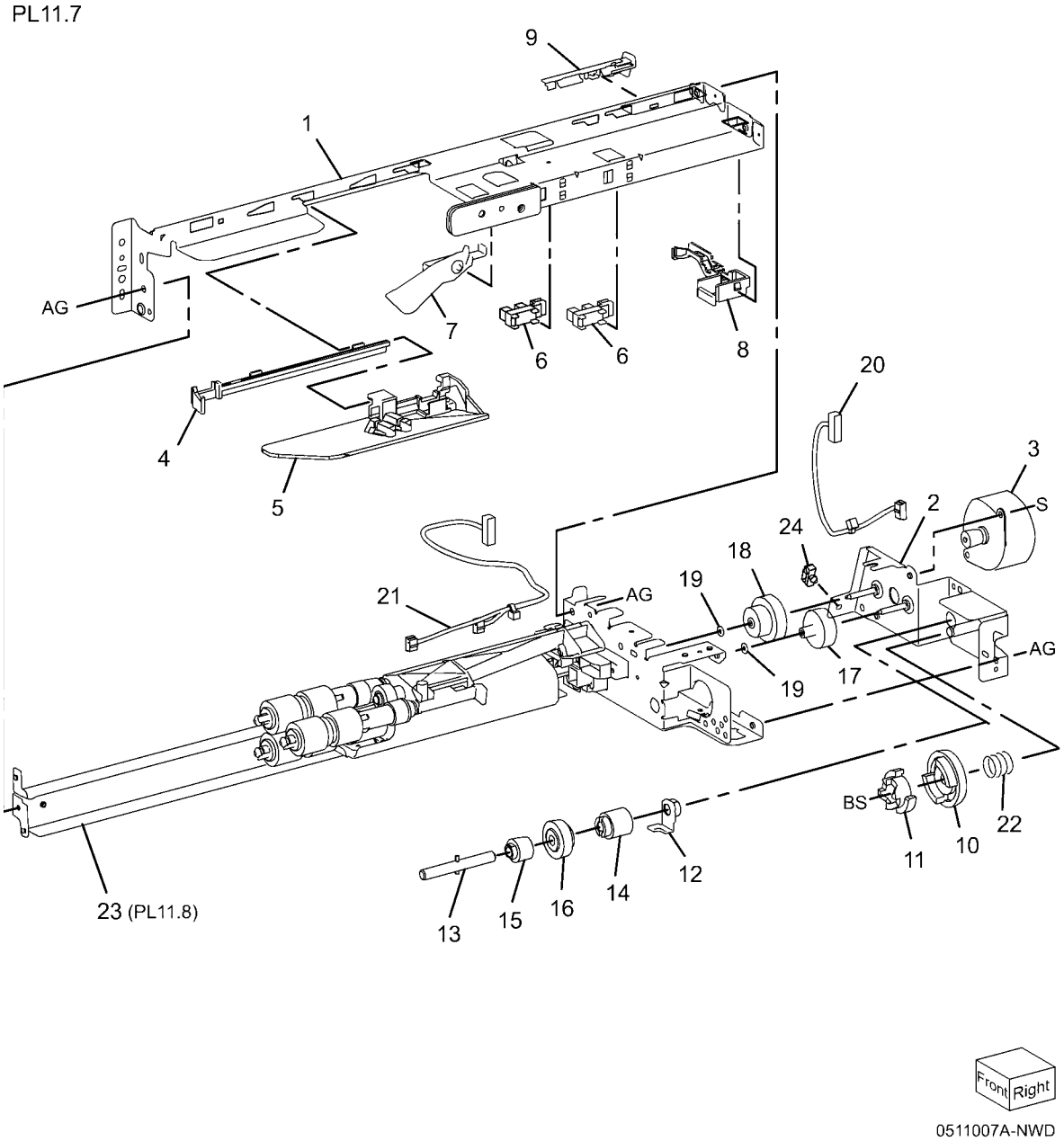

PL 11.8 Tray 2 Feeder (2 of 2)

Item	Part	Description
1	–	Frame Assembly (Not Spared)
2	604K56080	Feed Roll Kit
3	–	Nudger, Retard, Feed Roll (P/O PL 11.8 Item 2)
4	–	Spring (Not Spared)
5	–	Holder (Not Spared)
6	–	Level (Not Spared)
7	054E35370	Feed In Chute
8	–	Feed Shaft (Not Spared)
9	013E92890	Bearing
10	413W11660	Sleeve Bearing
11	807E20320	Helical Gear (30T)
12	–	Nudger Support (Not Spared)
13	807E20330	Spur Gear (29T)
14	005K10090	One Clutch Assembly
15	005K10080	One Way Clutch (Alternate)
–	005K05890	One Way Clutch
16	–	Nudger Shaft (Not Spared)
17	807E00070	Gear (25T)
18	–	Retard Support (Not Spared)
19	005K83300	Friction Clutch
20	014E45030	Spacer
21	–	Retard Shaft (Not Spared)
22	013E33450	Retard Bearing
23	–	Spring (Not Spared)
24	–	Spring (Not Spared)

PL11.8

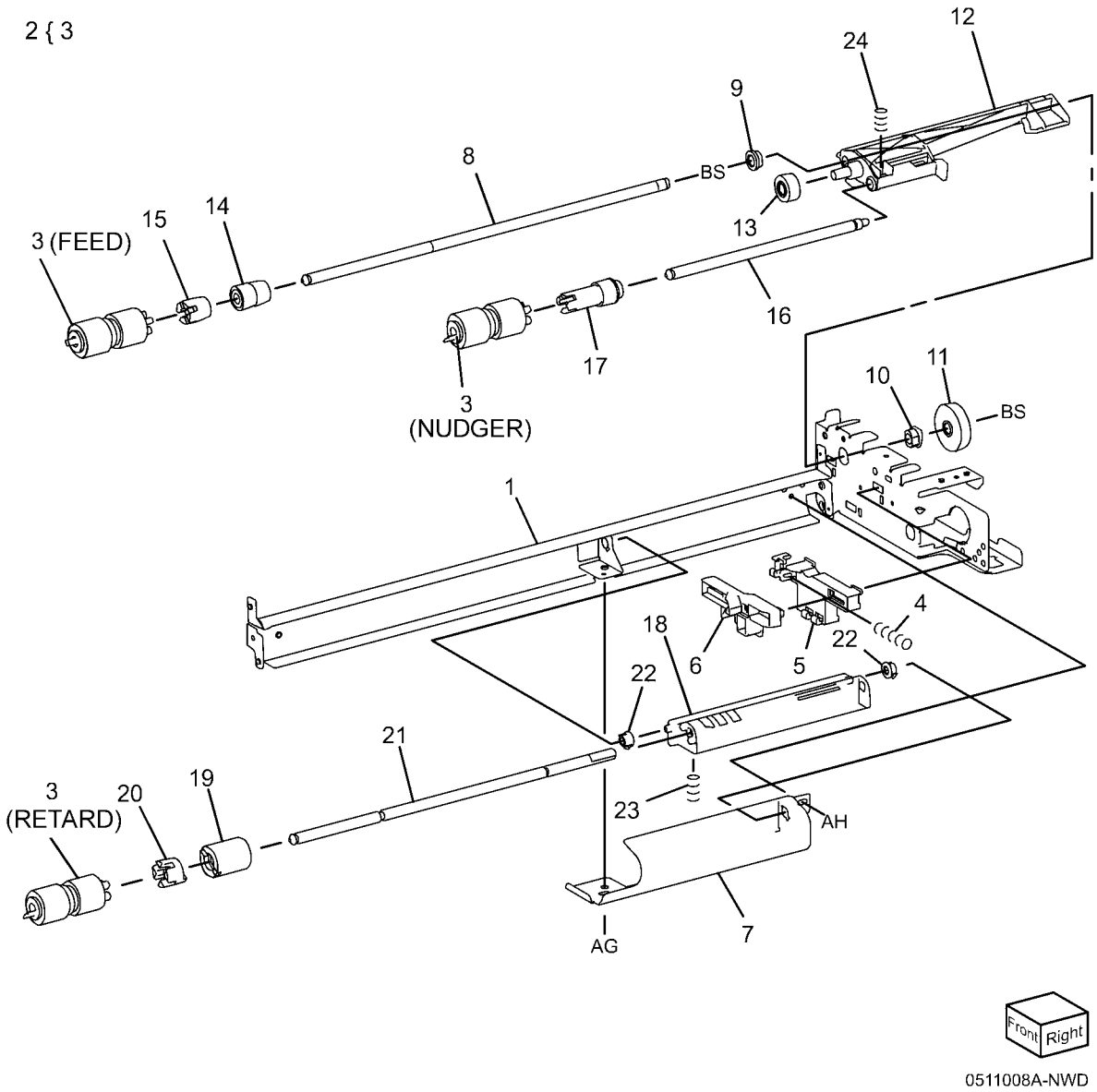

PL 11.9 Tray 3 Feeder (1 of 2)

Item	Part	Description
1	–	Frame (P/O PL 11.6 Item 13)
2	–	Bracket (P/O PL 11.6 Item 13)
3	–	Frame (P/O PL 11.6 Item 13)
4	127K52790	Tray 3 Feed/Lift Up
5	801E03601	Rail
6	054E23461	Chute
7	930W00123	Tray 3 Nudger Level, No Paper Sensor (Alternate)
–	930W00113	Tray 3 Nudger Level, No Paper Sensor
8	–	Harness Holder (P/O PL 11.6 Item 13)
9	120E22481	Actuator
10	–	Holder (P/O PL 11.6 Item 13)
11	–	Level (P/O PL 11.6 Item 13)
12	–	Upper Harness Holder (P/O PL 11.6 Item 13)
13	–	Rear Harness Holder (P/O PL 11.6 Item 13)
14	807E00390	Gear
15	014E44770	Spacer
16	013E26530	Bearing
17	006K23221	Drive Shaft
18	807E00800	Gear
19	005K83081	One Way Clutch
–	005K10100	One Way Clutch (Alternate)
–	005K07130	One Way Clutch (Alternate)
20	007K98130	One Way Gear (Alternate)
–	007K97870	One Way Gear
21	807E20300	Gear (25T)
22	807E30640	Gear (29T/24T)
23	–	Washer (P/O PL 11.6 Item 13)
24	–	Harness Assembly (P/O PL 11.6 Item 13)
25	–	Harness Assembly Sensor (P/O PL 11.6 Item 13)
26	–	Spring (P/O PL 11.6 Item 13)
27	–	Spring (P/O PL 11.6 Item 13)
28	–	Label (Not Spared)
29	–	Clamp (Not Spared)
30	930W00211	Tray 3 Pre Feed Sensor

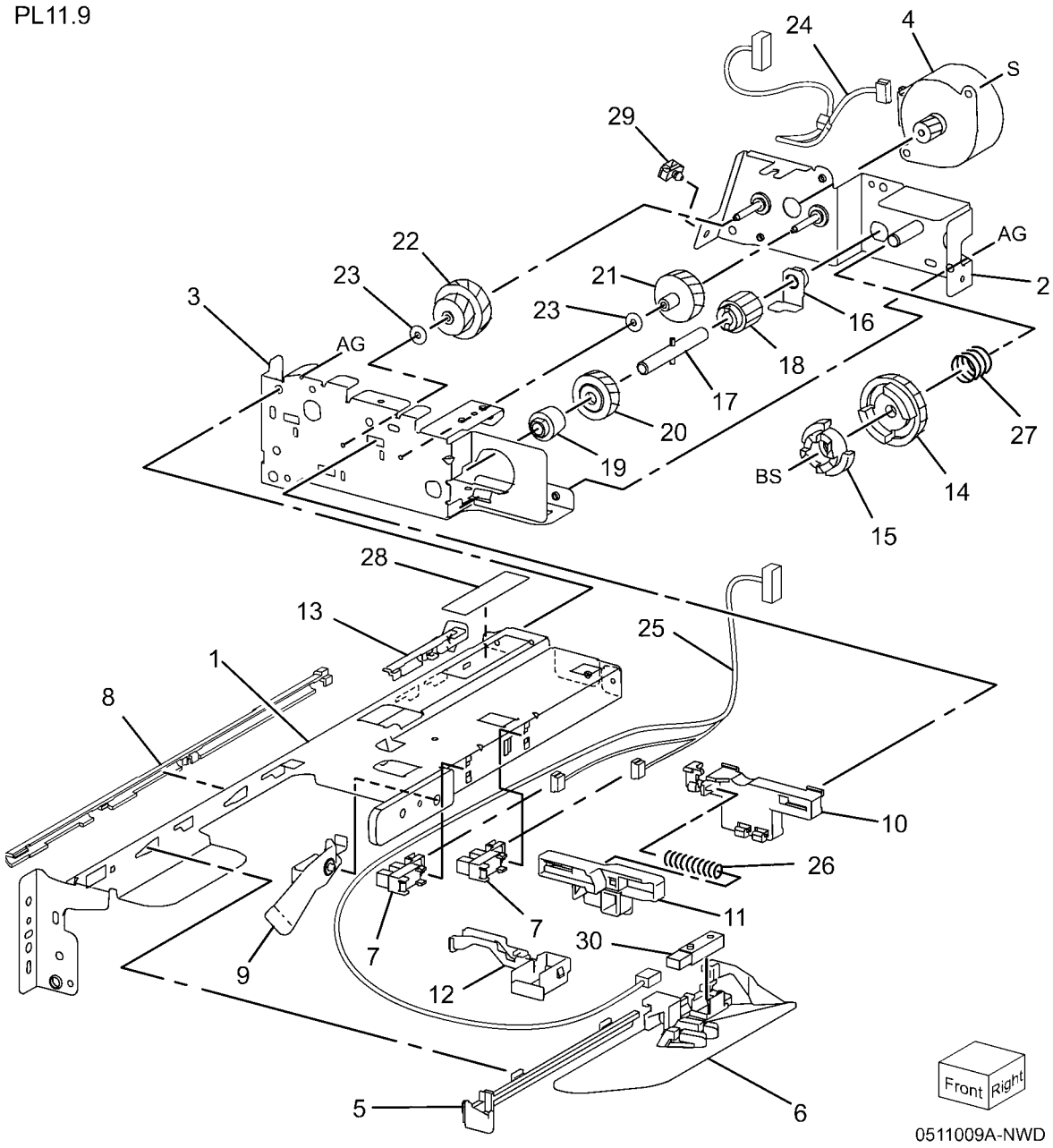

PL 11.10 Tray 3 Feeder (2 of 2)

Item	Part	Description
1	–	Frame (P/O PL 11.6 Item 13)
2	604K56080	Reed Roll Kit
3	–	Nudger, Retard, Feed Roll (P/O PL 11.10 Item 2)
4	–	Spring (P/O)
5	054E33790	Feed In Chute
6	–	Feed Shaft (P/O PL 11.6 Item 13)
7	013E92890	Bearing
8	413W11660	Sleeve Bearing
9	807E30650	Gear (25T)
10	–	Support (P/O PL 11.6 Item 13)
11	807E20330	Gear (29T)
12	005K08820	Clutch (25T) (Alternate)
–	005K10090	Clutch (25T) (Alternate)
–	005K08680	Clutch (25T) (Alternate)
13	005K10080	One Way Clutch (Alternate)
–	005K05890	One Way Clutch (Alternate)
14	–	Nudger Shaft (P/O PL 11.6 Item 13)
15	807E00070	Gear (25T)
16	–	Support (P/O PL 11.6 Item 13)
17	005K83300	Friction Clutch
18	014E45030	Spacer
19	–	Retard Shaft (P/O PL 11.6 Item 13)
20	013E33450	Retard Bearing
21	–	Spring (P/O PL 11.6 Item 13)

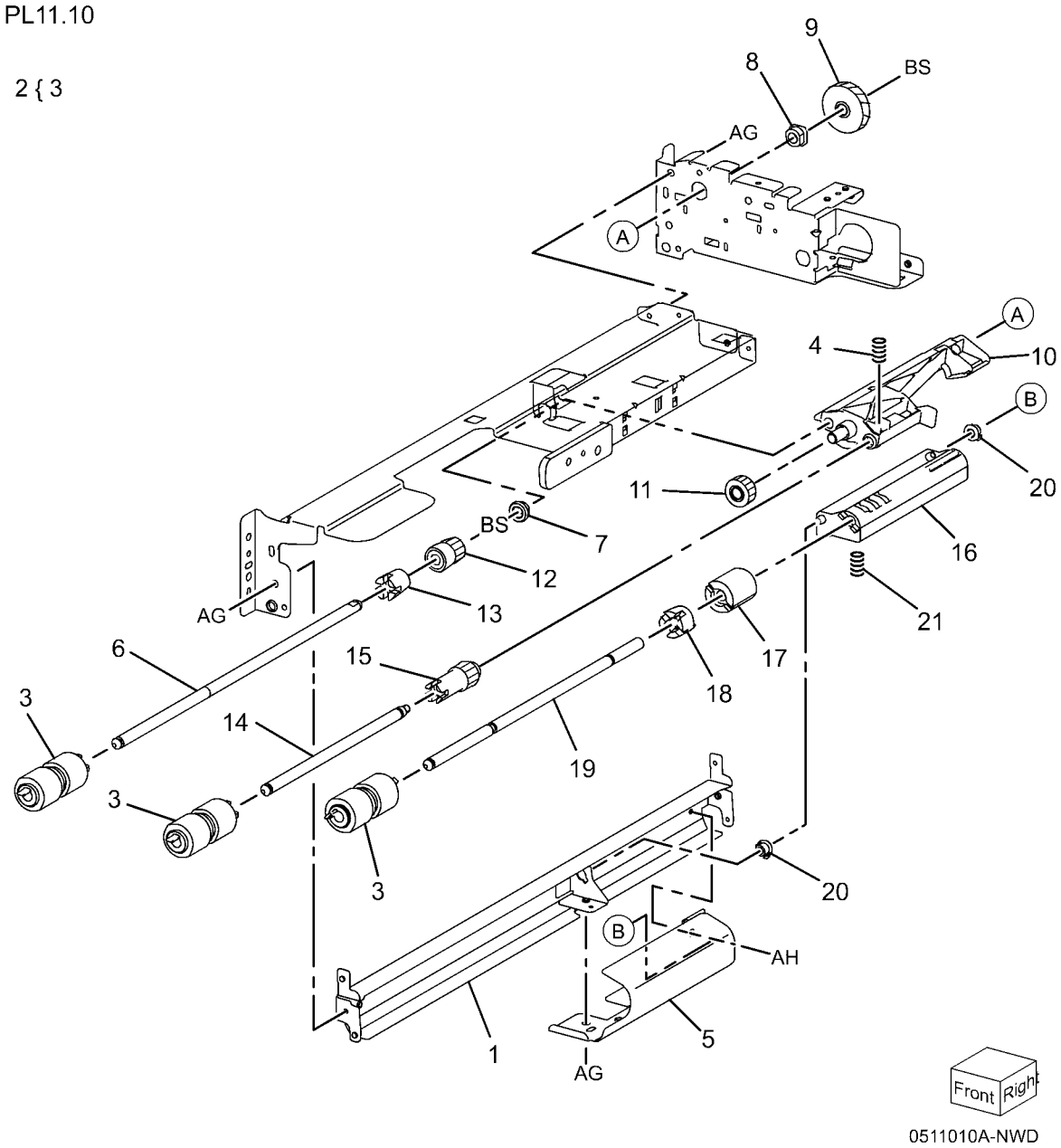

PL 11.11 Tray 4 Feeder (1 of 2)

Item	Part	Description
1	–	Frame (P/O PL 11.5 Item 1)
2	–	Bracket (P/O PL 11.5 Item 1)
3	–	Frame (P/O PL 11.5 Item 1)
4	127K52790	Tray Feed/Lift Up Motor
5	801E03601	Rail
6	054E23461	Chute
7	930W00123	Tray 4 Nudger Level, No Paper Sensor (Alternate)
–	930W00113	Tray 4 Nudger Level, No Paper Sensor (Alternate))
8	–	Harness Holder (P/O PL 11.5 Item 1)
9	120E22481	Actuator
10	–	Holder (P/O PL 11.5 Item 1)
11	011E20381	Lever
12	–	Upper Harness Holder (P/O PL 11.5 Item 1)
13	–	Rear Harness Holder (P/O PL 11.5 Item 1)
14	807E00390	Gear
15	014E44770	Spacer
16	013E26530	Bearing
17	006K23221	Drive Shaft
18	807E00800	Gear
19	005K83081	One Way Clutch (Alternate)
–	005K10100	One Way Clutch (Alternate)
–	005K07130	One Way Clutch (Alternate)
20	007K97870	One Way Gear (Alternate)
–	007K98130	One Way Gear (Alternate)
–	007K16960	One Way Gear
21	807E20300	Gear (25T)
22	807E30640	Gear (29T/24T)
23	–	Washer (Not Spared)
24	–	Harness Assembly (P/O PL 11.5 Item 1)
25	–	Harness Assembly Sensor (P/O PL 11.5 Item 1)
26	–	Spring (P/O PL 11.5 Item 1)
27	–	Spring (P/O PL 11.5 Item 1)
28	–	Label (Not Spared)
29	–	Clamp (P/O PL 11.5 Item 1)
30	930W00211	Tray Pre Feed Sensor

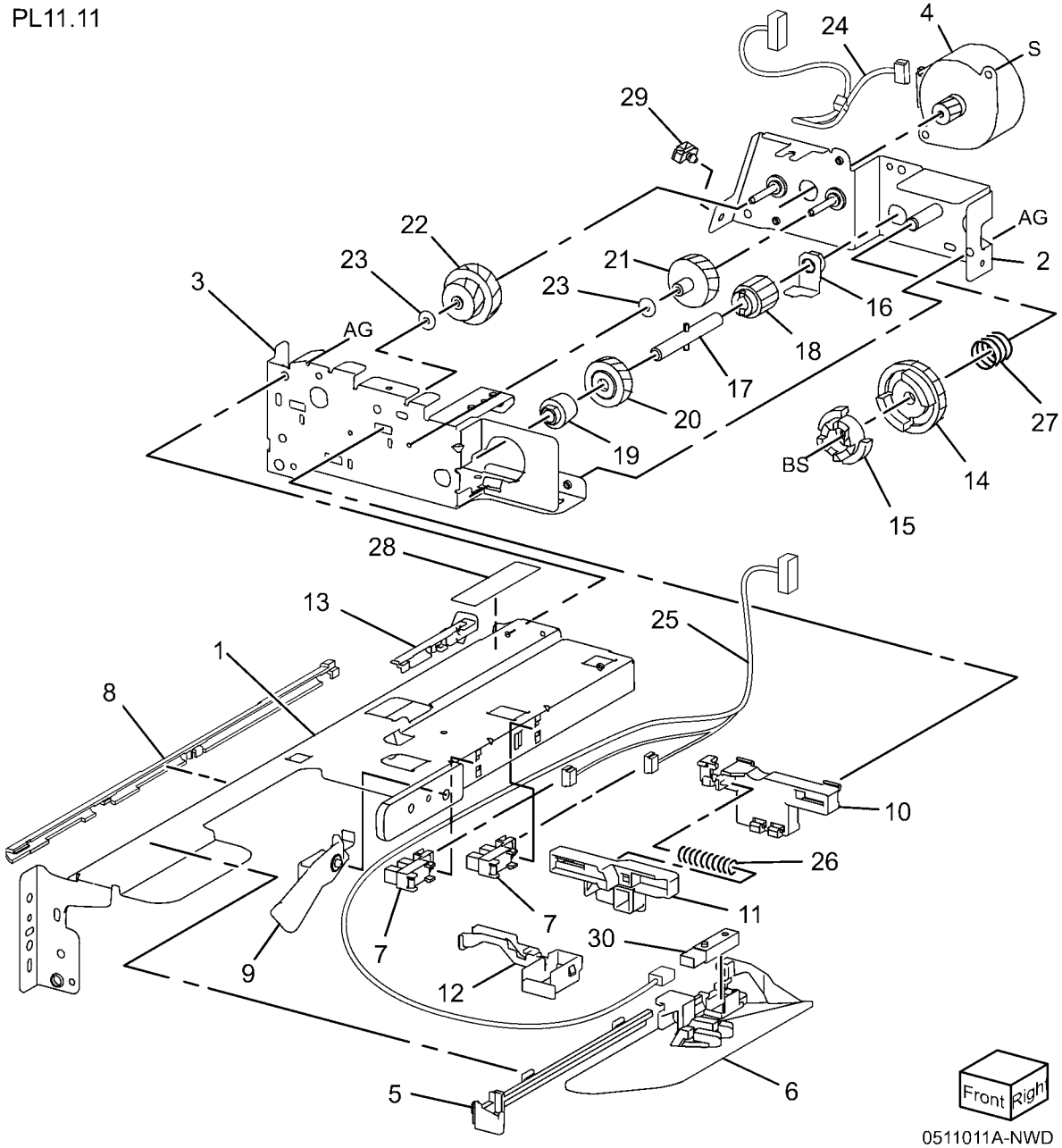

PL 11.12 Tray 4 Feeder (2 of 2)

Item	Part	Description
1	–	Frame (Not Spared)
2	604K56080	Feed Roll Kit
3	–	Nudger, Retard, Feed Roll (P/O PL 11.12 Item 2)
4	–	Spring (Not Spared)
5	054E33790	Feed In Chute
6	–	Feed Shaft (Not Spared)
7	013E92890	Bearing
8	413W11660	Sleeve Bearing
9	807E30650	Gear (25T)
10	–	Support (Not Spared)
11	807E20330	Gear (29T)
12	005K08820	Clutch (25T) (Alternate)
–	005K10090	Clutch (25T) (Alternate)
–	005K08680	Clutch (25T) (Alternate)
13	005K10080	One Way Clutch
–	005K05890	One Way Clutch
14	–	Nudger Shaft
15	807E00070	Gear (25T)
16	–	Support
17	005K83300	Friction Clutch
18	014E45030	Spacer
19	–	Retard Shaft (Not Spared)
20	013E33450	Retard Bearing
21	–	Spring (Not Spared)

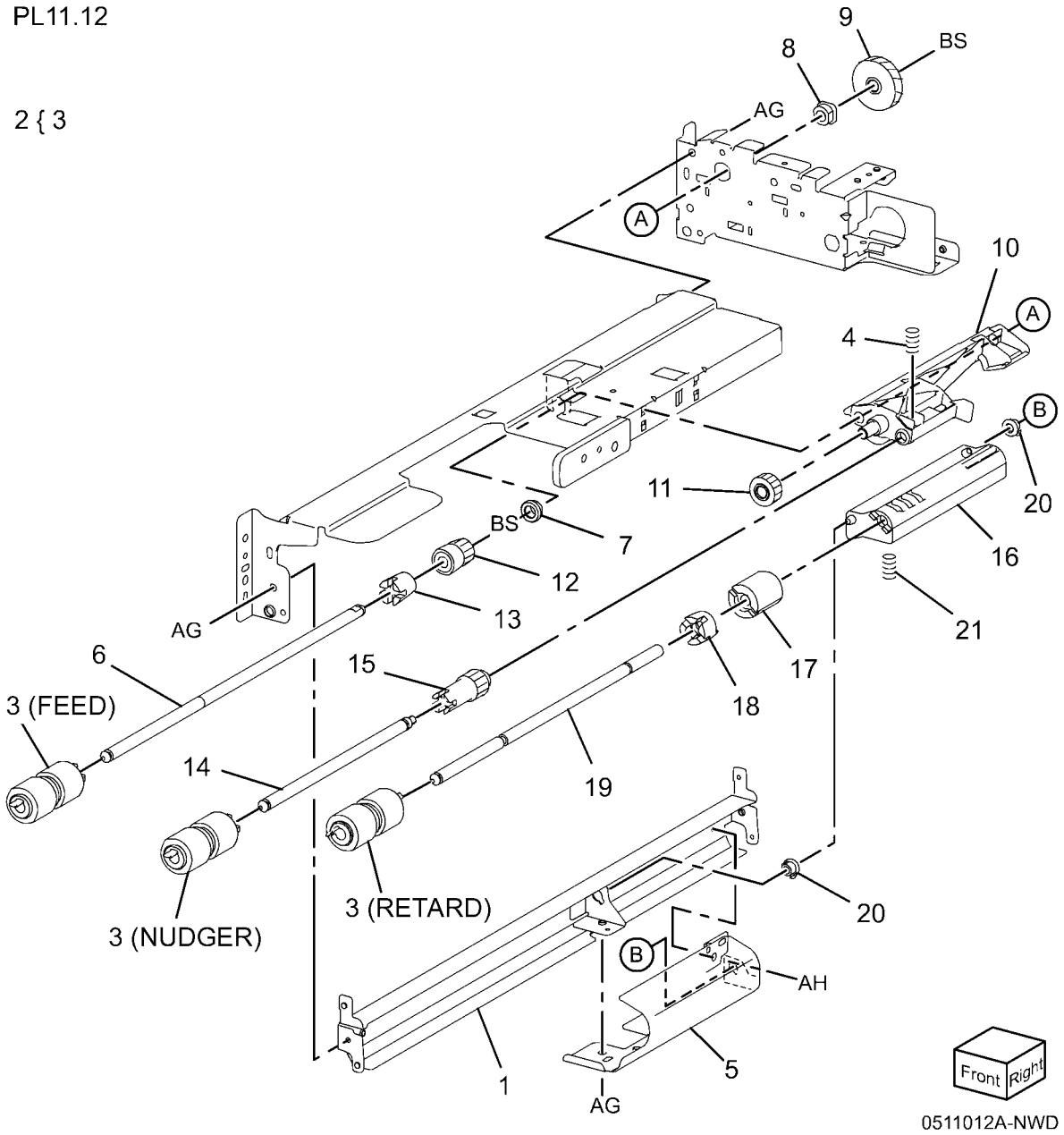

PL 11.13 Left Cover Assembly

Item	Part	Description
1	068K55701	Upper Bracket
2	068K55711	Lower Bracket
3	–	Cover (Not Spared)
4	110E12220	Left Hand Cover Switch
5	–	Wire Harness (Not Spared)
6	068K55791	Hinge Bracket
7	848K17711	Left Cover Assembly
8	–	Left Cover (P/O PL 11.13 Item 7)
9	003E75571	Handle
10	003E75591	Latch
11	019E69600	Hook
12	059E99241	Pinch Roll
13	–	Pinch Shaft (P/O PL 11.13 Item 7)
14	–	Pinch Bearing (P/O PL 11.13 Item 7)
15	–	Pinch Spring (P/O PL 11.13 Item 7)
16	054E38240	Upper Chute
17	–	Lower Chute (P/O PL 11.13 Item 7)
18	–	Hinge (P/O PL 11.13 Item 7)
19	–	Spring (P/O PL 11.13 Item 7)
20	–	Label (P/O PL 11.13 Item 7)

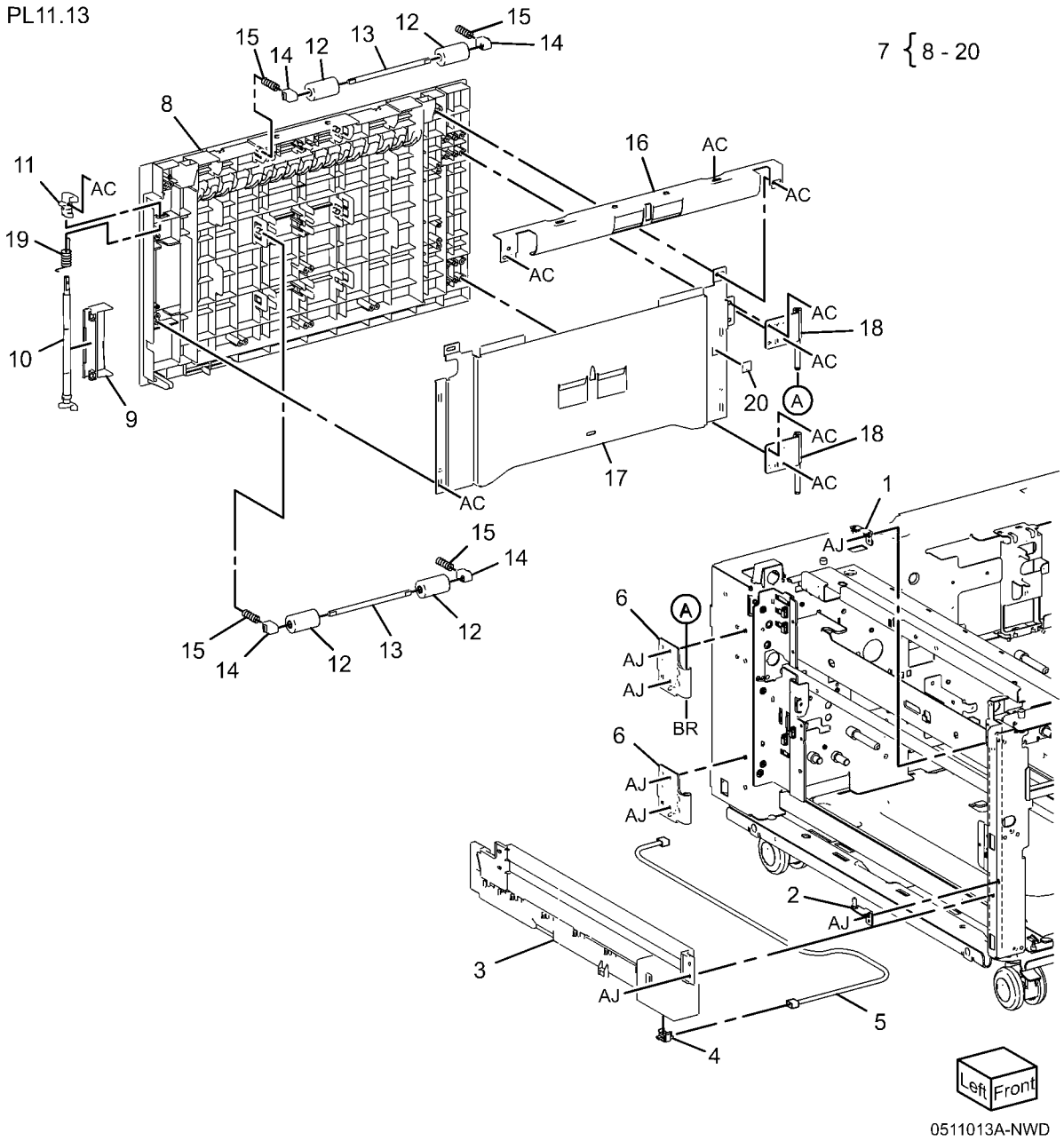

PL 11.14 Tray Front Supports

Item	Part	Description
1	–	Spacer (Not Spared)
2	068K63522	Roll and Bracket
3	–	Bracket (P/O PL 11.14 Item 2)
4	–	Roll (P/O PL 11.14 Item 2)
5	–	Shaft (P/O PL 11.14 Item 2)
6	059E05060	Roll
7	003E75551	Stopper
8	803E02420	Stopper
9	803E02430	Stopper
10	803E01200	Stopper
11	059E05131	Roll
12	003E75431	Stopper
13	059E03500	Roll
14	059E03510	Roll

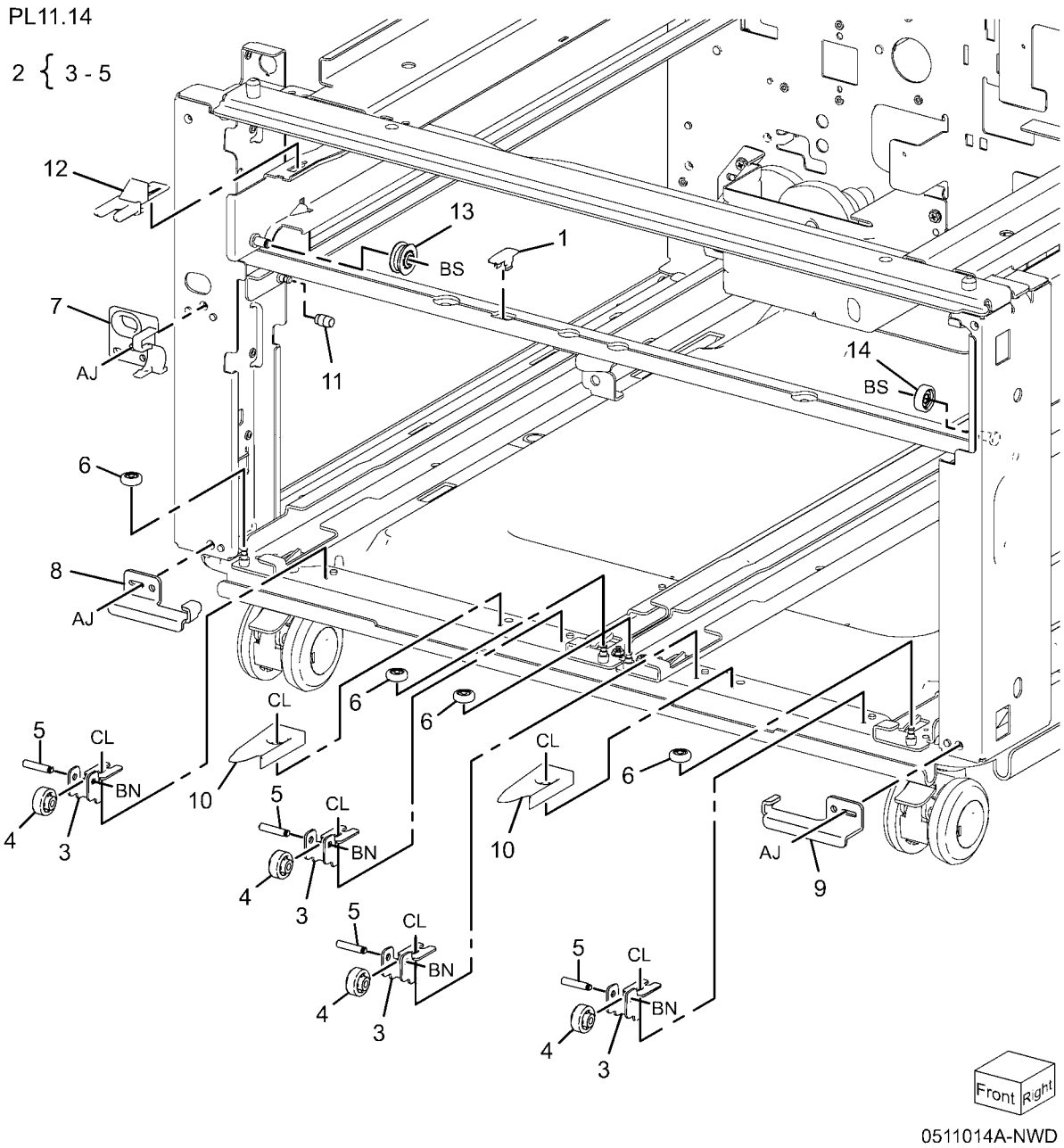

0511014A-NWD

PL 11.15 Tray 2/3/4 Paper and Lift Sensors

Item	Part	Description
1	110K11820	Tray 3, 4 Paper Size Sensor
2	110K12100	Tray 2 Paper Size Sensor
3	007E78320	Gear (17T/50T)
4	007E78330	Gear (16T/48T)
5	007E78340	Gear (57T)
6	807E16730	Gear (18T)
7	007E78350	Gear (51T)
8	–	Bracket (Not Spared)
9	–	Bracket (Not Spared)

PL11.15

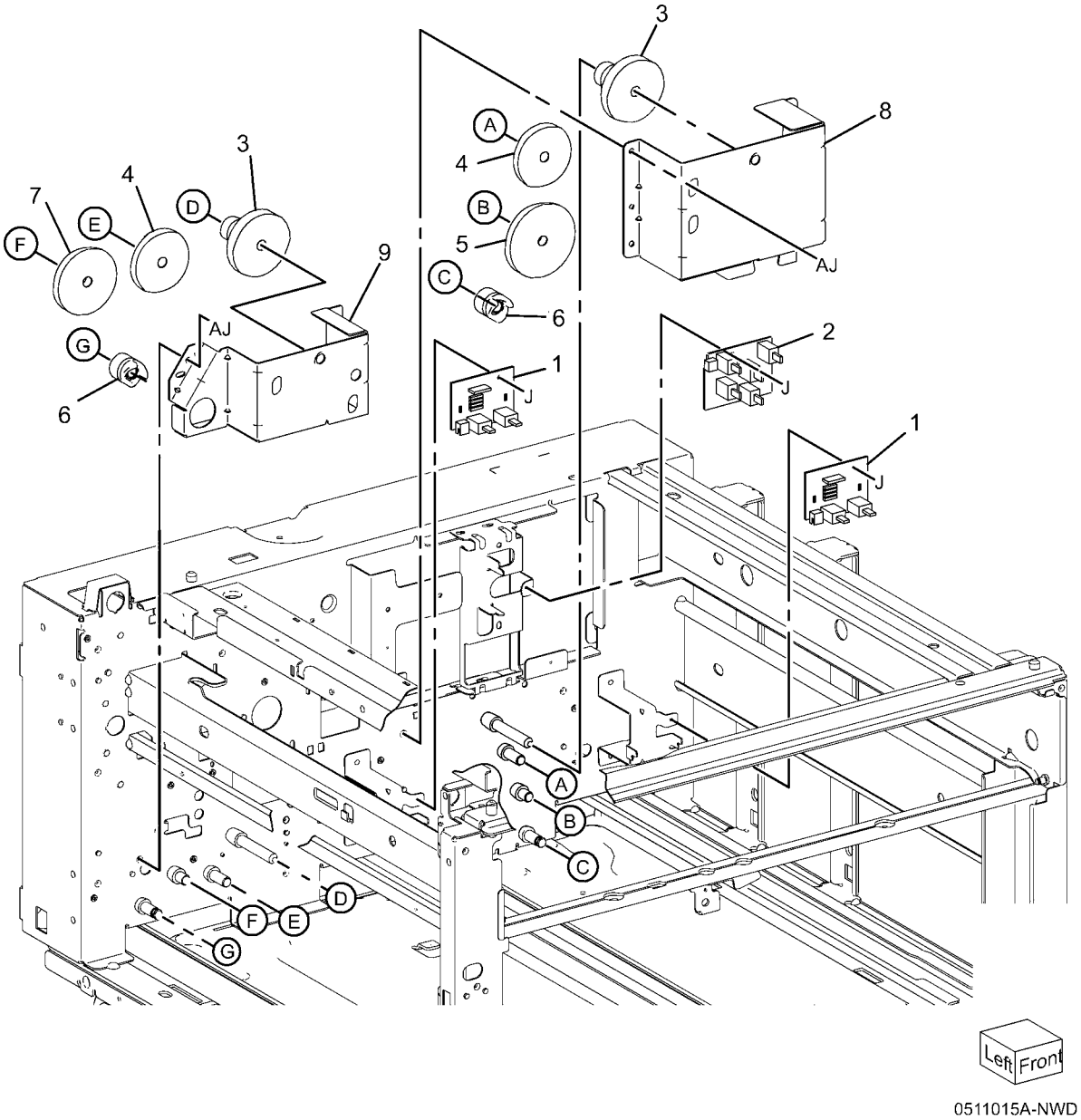

0511015A-NWD

PL 11.16 Drive

Item	Part	Description
1	807E20740	Gear (52T)
2	807E20720	Gear (32T)
3	807E20730	Gear (20T/65T)
4	005E24940	Collar
5	020E45190	Pulley Gear
6	059E03590	Roll
7	423W56254	Belt
8	809E75980	Spring
9	068K55640	Tension Bracket
10	–	Bracket (P/O PL 11.16 Item 18)
11	068K55650	Gear Bracket
12	127K60441	Take Away Motor
13	127K52880	Take Away Motor
14	–	Bracket (P/O PL 11.16 Item 12)
15	807E20760	Gear (81T)
16	807E25640	Gear (70T)
17	–	Collar (P/O PL 11.16 Item 12)
18	127K60450	Take Away Motor

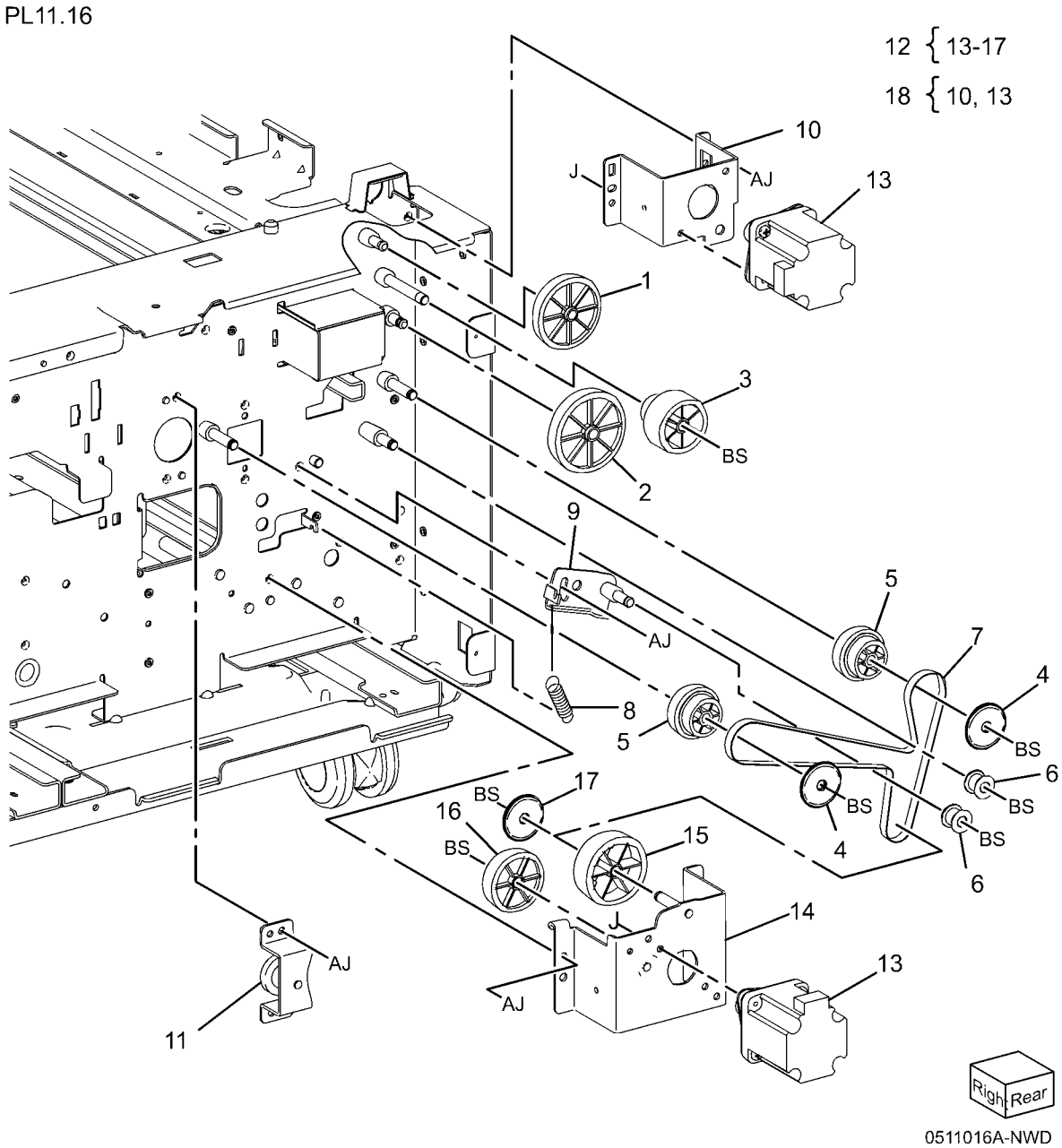

PL 11.17 Electrical

Item	Part	Description
1	–	Ground Plate (Not Spared)
2	–	Transport Guide (Not Spared)
3	960K54151	Tray Module PWB
4	962K75371	Harness Assembly Sensor
5	962K75381	Harness Assembly Motor
6	–	Harness Assembly (I/F) (Not Spared)

PL11.17

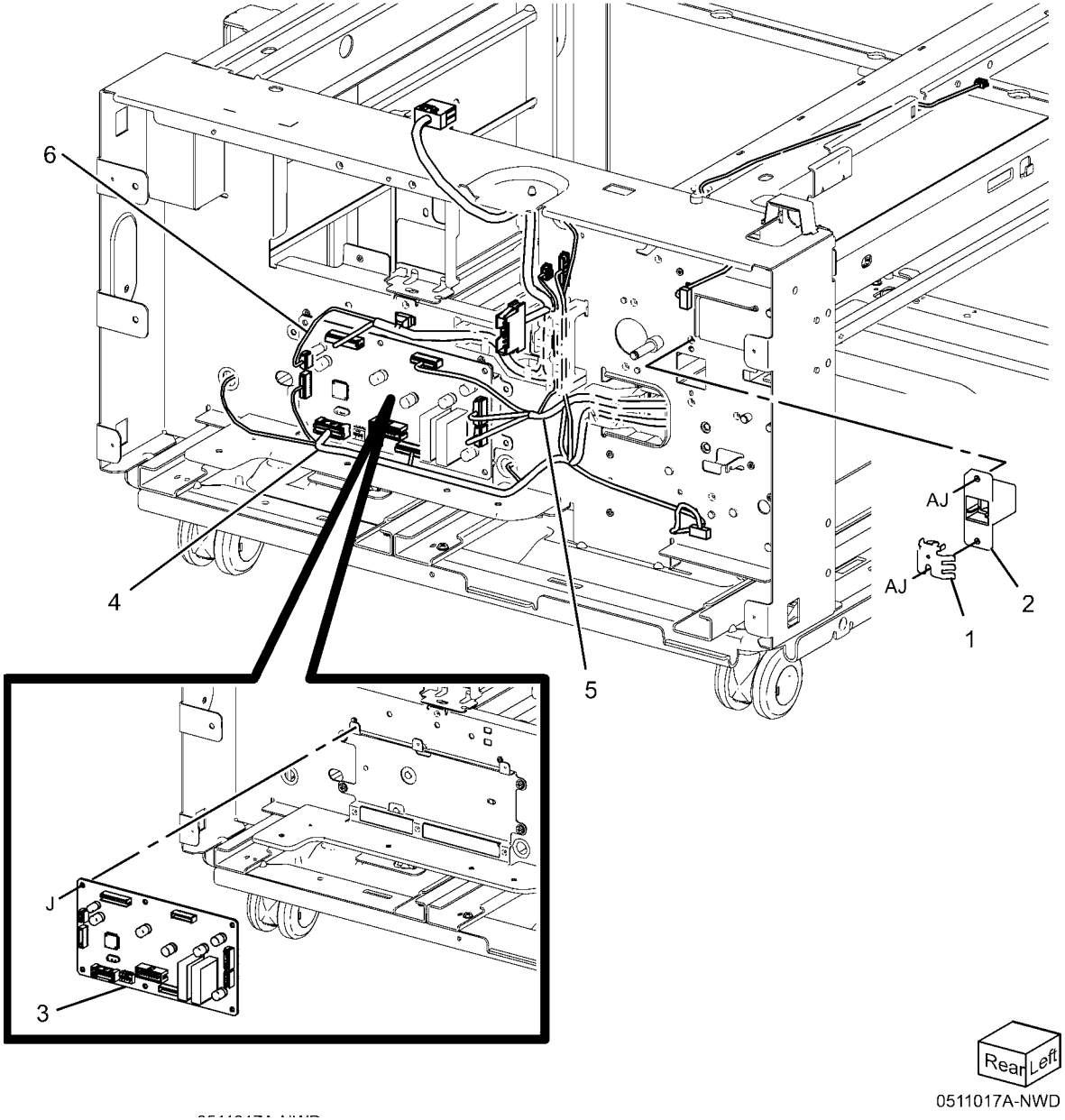

PL 11.18 Covers

Item	Part	Description
1	017K94570	Caster Assembly
2	017K94580	Swizzle Caster
3	–	Screw
4	–	Screw (M4) (Not Spared)
5	–	Screw (M4)
6	848E12720	Top Cover
7	848E12691	Left Cover
8	848K56600	Rear Cover
9	–	Cover (P/O PL 11.18 Item 8)
10	–	Blind Cover (P/O PL 11.18 Item 8)
11	848E12702	Right Cover
12	868E15860	Foot Bracket
13	–	Foot Cover (Not Spared)
14	868E20860	Foot Bracket
15	848E45610	Foot Cover
16	017K94590	Adjuster Foot Assembly
17	–	Docking Screw (Not Spared)
18	–	Docking Bracket (Not Spared)

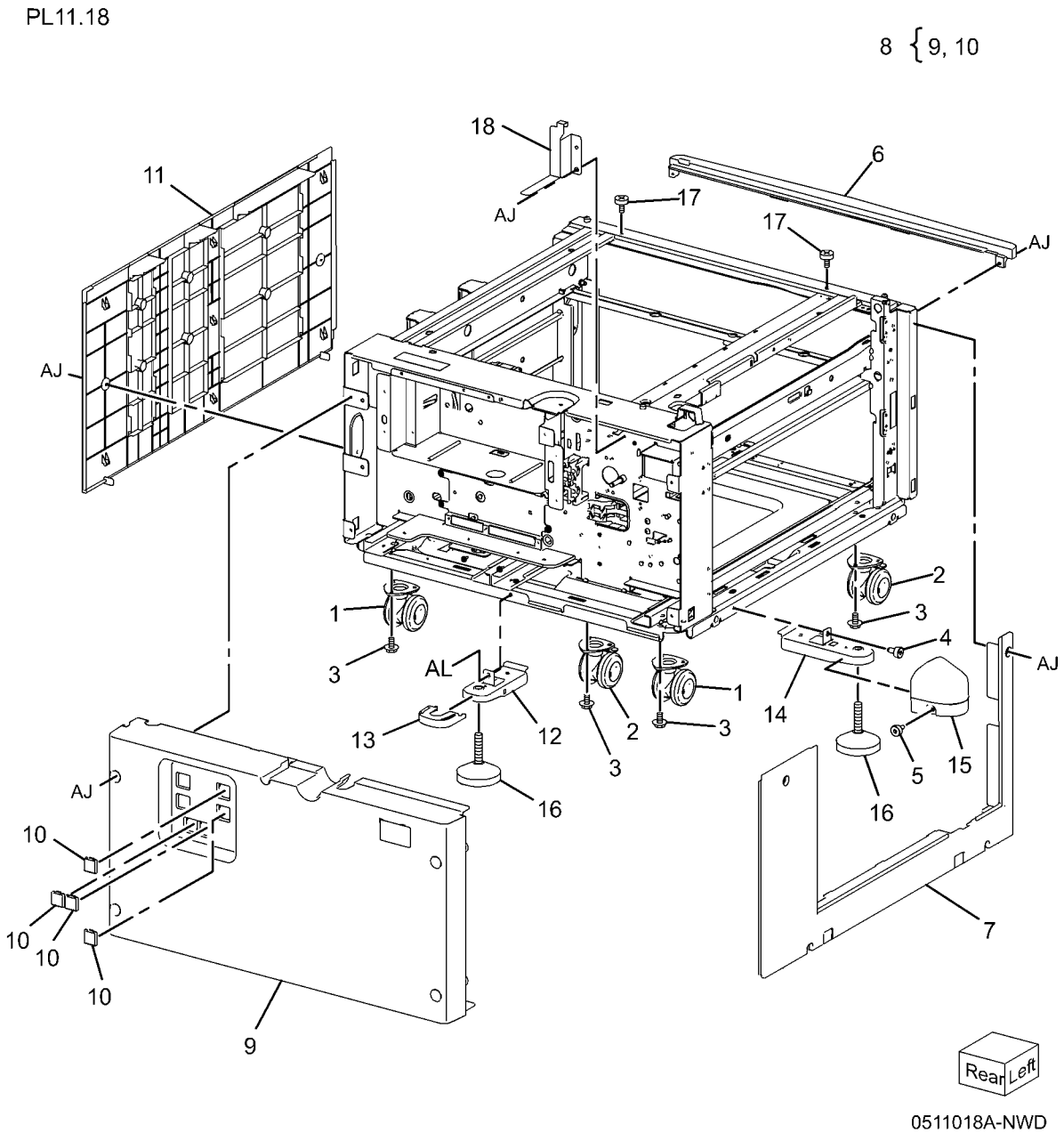

PL 13.1 Bypass Tray Assembly (1 of 5)

Item	Part	Description
1	059K73151	Bypass Tray Assembly
2	–	Head Assembly (P/O PL 13.1 Item 1)
3	050K64540	Tray Assembly
4	897E04930	Label (Instruction)
5	896E46040	Label (Max)

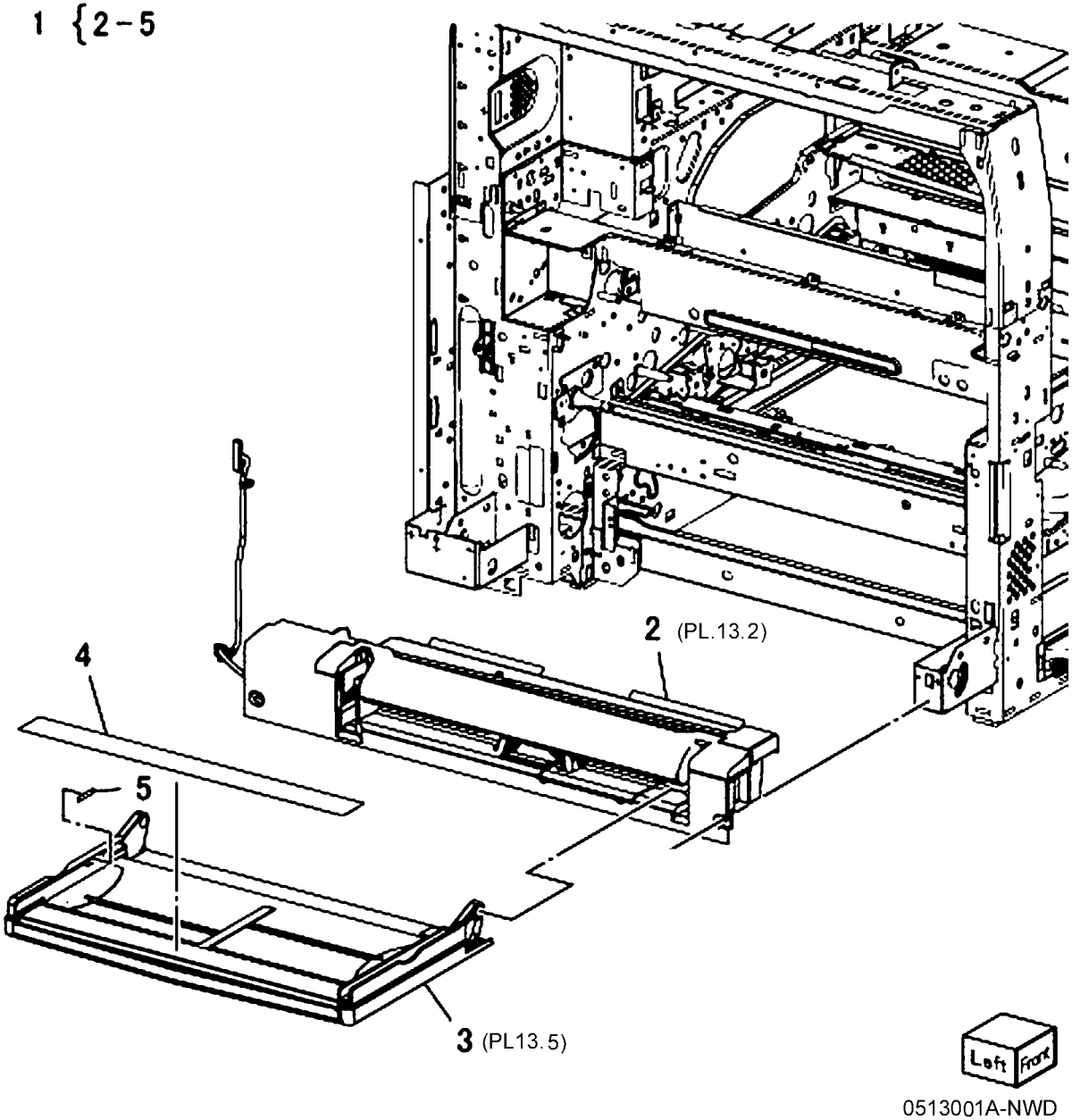

PL 13.2 Bypass Tray Assembly (2 of 5)

Item	Part	Description
1	–	Upper Tray Assembly (P/O PL 13.1 Item 1)
2	801K40490	Lower Tray Assembly
3	–	Drive Bracket Assembly (P/O PL 13.1 Item 1)
4	–	Gear (29T/19T) (P/O PL 13.1 Item 1)
5	–	Gear (31T/15T) (P/O PL 13.1 Item 1)
6	127K52790	Feeder/Nudger Motor
7	–	Sensor Bracket (P/O PL 13.1 Item 1)
8	930W00113	Nudger Position Sensor
9	848E44583	Top Cover
10	120E29441	Actuator
11	–	Harness Holder (P/O PL 13.1 Item 1)

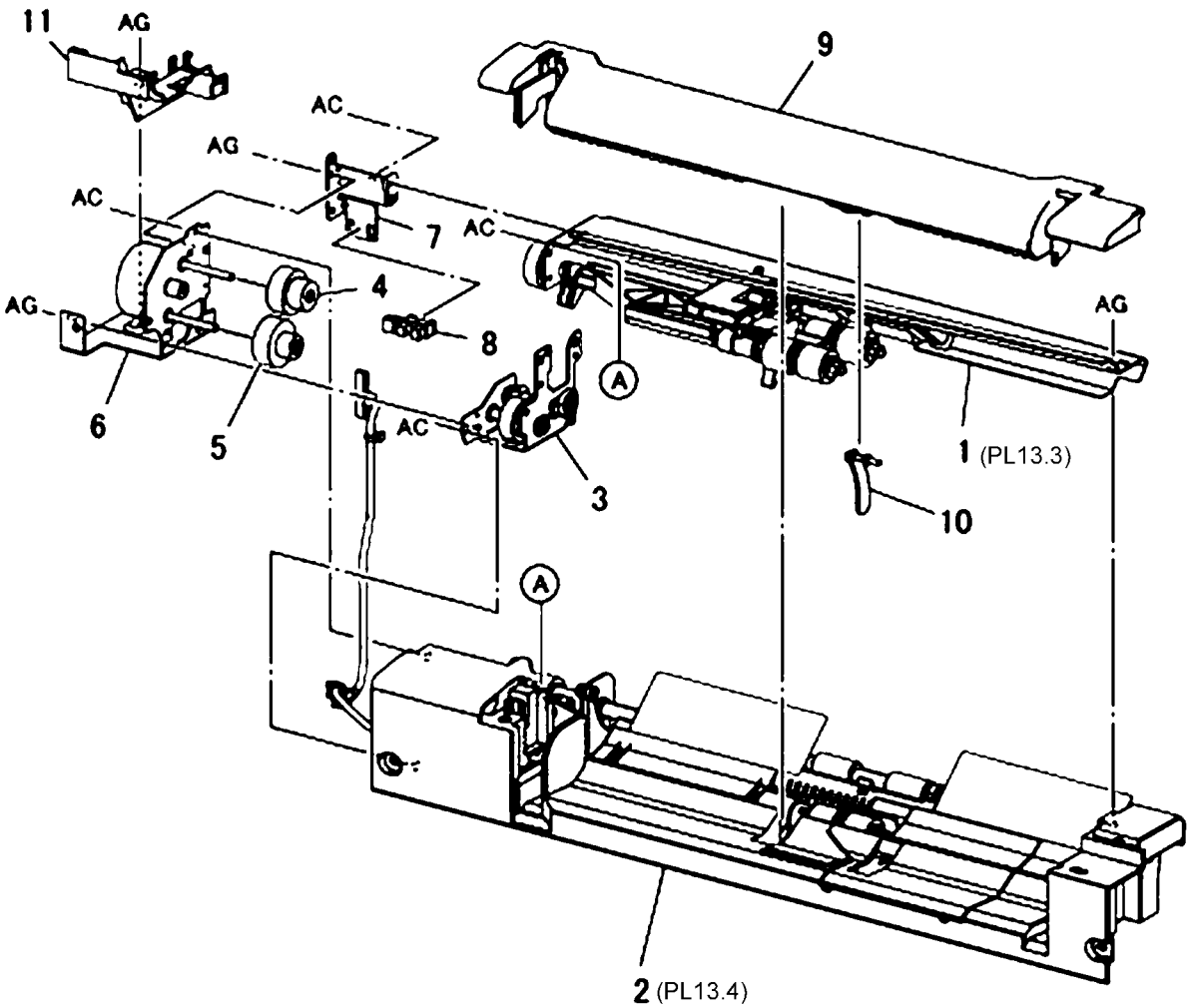

0513002A-NWD

PL 13.3 Bypass Tray Assembly (3 of 5)

Item	Part	Description
1	–	Pinch Chute Assembly (P/O PL 13.1 Item 1)
2	–	Gear Support (P/O PL 13.1 Item 1)
3	–	Gear (21T) (P/O PL 13.1 Item 1)
4	–	Gear (23T) (P/O PL 13.1 Item 1)
5	–	Lock Stopper (P/O PL 13.1 Item 1)
6	–	Nudger Support (P/O PL 13.1 Item 1)
7	–	Nudger Shaft (P/O PL 13.1 Item 1)
8	–	Gear (25T) (P/O PL 13.1 Item 1)
9	–	Stopper (P/O PL 13.1 Item 1)
10	–	Feed Shaft (P/O PL 13.1 Item 1)
11	413W85459	Bearing
12	413W11660	Sleeve Bearing
13	–	Gear (30T) (P/O PL 13.1 Item 1)
14	005K08370	One Way Clutch (22T)
15	–	One Way Clutch (P/O PL 13.1 Item 1)
16	–	Spring (P/O PL 13.1 Item 1)
17	–	Feed Roll, Nudger Roll (P/O PL 13.3 Item 23) (REP 7.22)
18	–	Guide (P/O PL 13.1 Item 1)
19	–	Pinch Chute Assembly (P/O PL 13.1 Item 1)
20	–	Spacer (P/O PL 13.1 Item 1)
21	–	Shaft (P/O PL 13.1 Item 1)
22	059E04040	Pinch Roll
23	604K66430	MSI Roll Kit (W/TAG P-002)

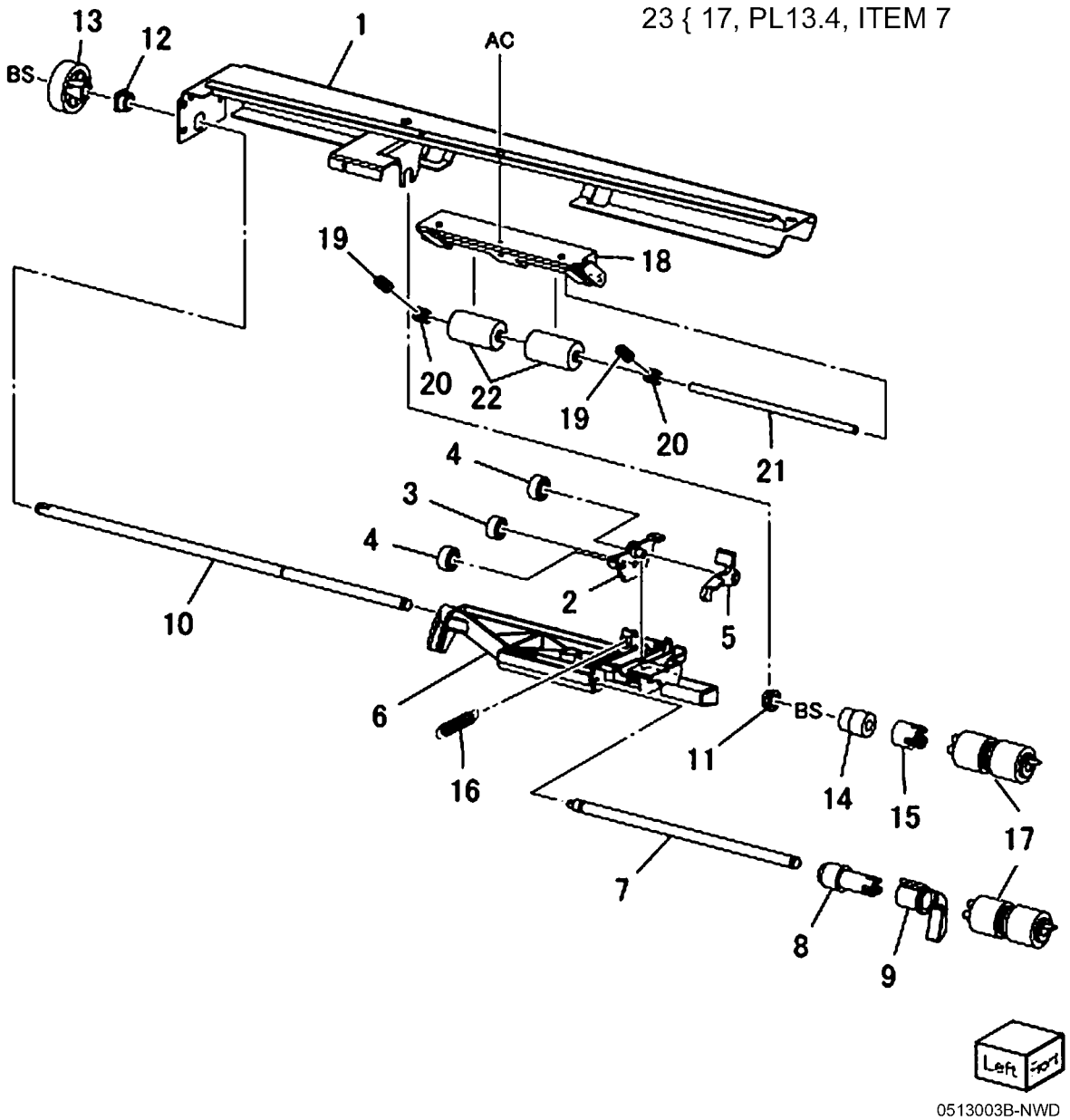

PL 13.4 Bypass Tray Assembly (4 of 5)

Item	Part	Description
1	–	Tray 5 Lower Frame (P/O PL 13.2 Item 2)
2	962K58261	Tray Wire Harness
3	–	Retard Support (P/O PL 13.2 Item 2)
4	–	Shaft (P/O PL 13.2 Item 2)
5	005K83330	Friction Clutch
6	014E45030	Spacer
7	–	Retard Roll (P/O PL 13.3 Item 23)
8	–	Retard Spring (P/O PL 13.2 Item 2)
9	–	Plate (P/O PL 13.2 Item 2)
10	059K53691	Drive Roll Assembly
11	–	Collar (P/O PL 13.2 Item 2)
12	–	Gear (23T) (P/O PL 13.2 Item 2)
13	–	Sleeve Bearing (P/O PL 13.2 Item 2)
14	413W11860	Sleeve Bearing
15	–	Sensor Plate (P/O PL 13.2 Item 2)
16	130K72110	Tray 5 Feed Out Sensor
17	930W00113	Tray 5 No Paper Sensor
18	019E68980	Bottom Pad
19	054E33950	Front Chute

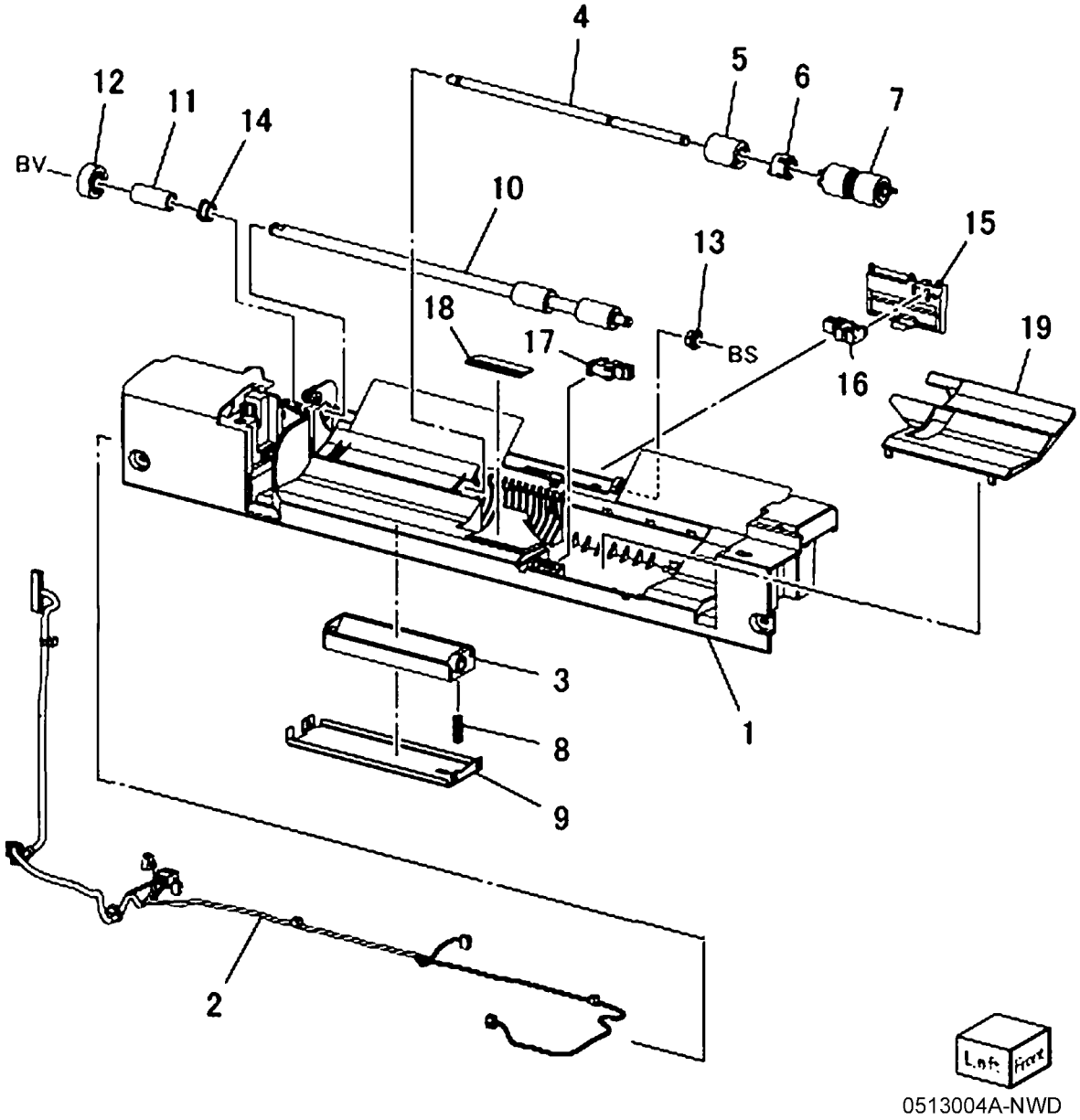

0513004A-NWD

PL 13.5 Bypass Tray Assembly (5 of 5)

Item	Part	Description
1	–	Bypass Tray (P/O PL 13.1 Item 3)
2	–	Front Rack (P/O PL 13.1 Item 3)
3	–	Rear Rack (P/O PL 13.1 Item 3)
4	130K70660	Paper Size Sensor
5	007E79700	Pinion Gear
6	–	Front Side Guide (P/O PL 13.1 Item 3)
7	–	Rear Side Guide (P/O PL 13.1 Item 3)
8	–	Wire Harness (P/O PL 13.1 Item 3)
9	–	Wire Harness (P/O PL 13.1 Item 3)
10	–	Plate (P/O PL 13.1 Item 3)
11	–	Extension Tray (L1) (P/O PL 13.1 Item 3)
12	–	Extension Tray (L2) (P/O PL 13.1 Item 3)
13	012E11760	Sensor Link
14	809E49930	Sensor Spring

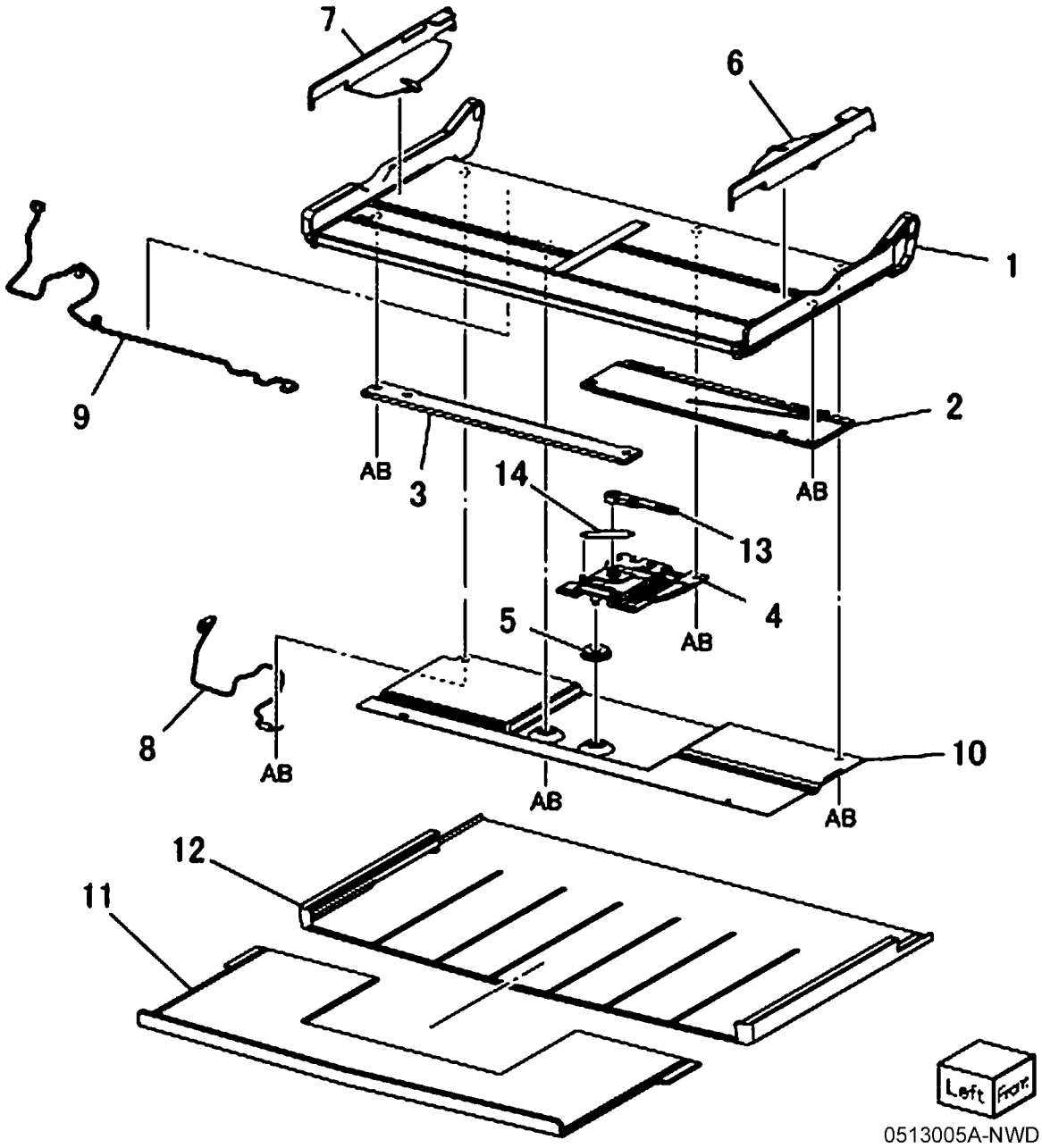

PL 14.1 Left Hand Cover (1 of 2)

Item	Part	Description
1	849E97100	Bracket
2	806E21420	Shaft
3	896E89601	Label
4	110E11980	Cover Interlock Switch
5	–	Left Hand Cover (Not Spared) (REP 14.1)

PL14.1

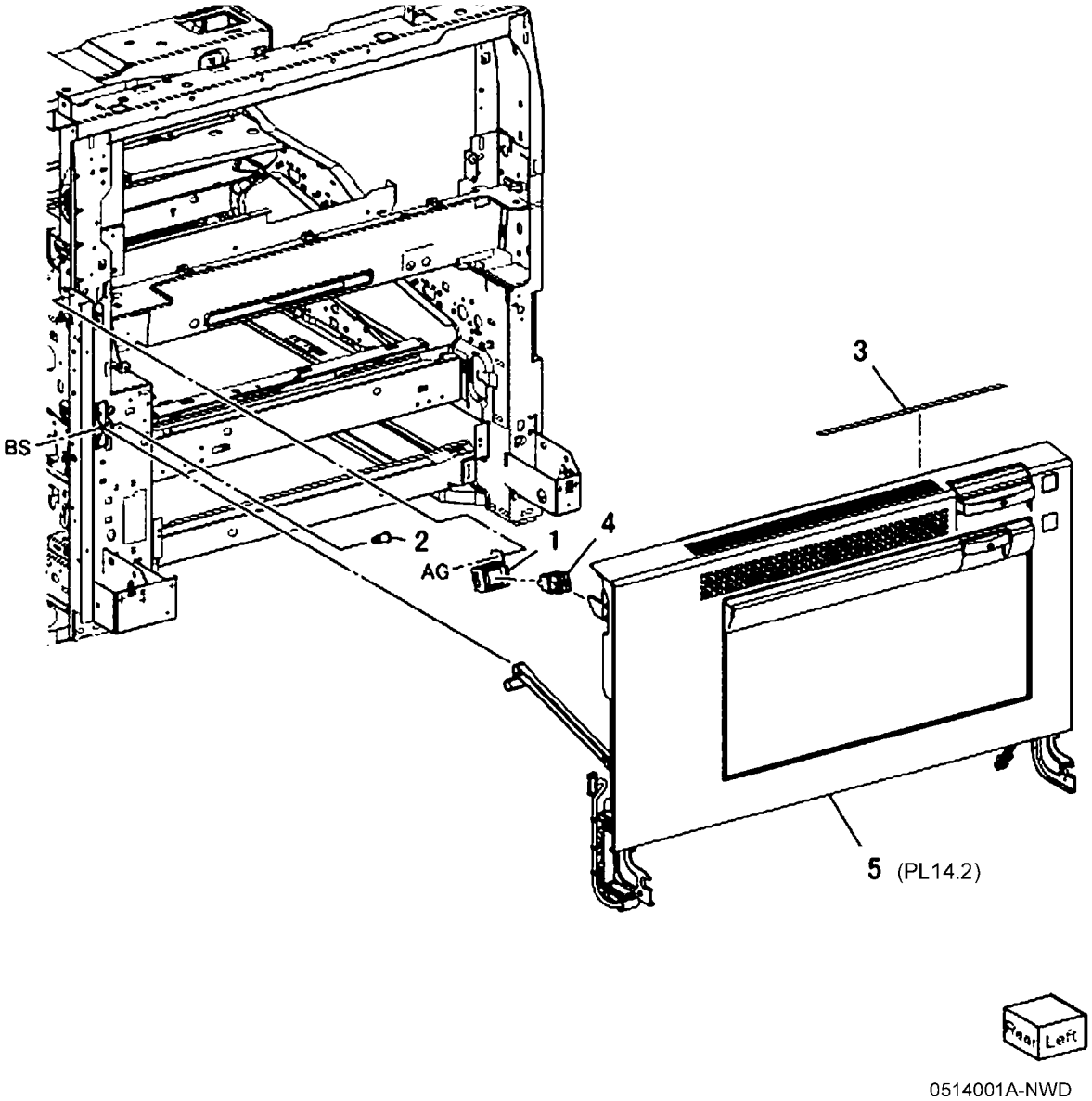

PL 14.2 Left Hand Cover (2 of 2)

Item	Part	Description
1	008R13064	2nd BTR Unit (REP 9.9)
2	848K45150	Left Hand Cover Assembly (7525, 7530, 7535)
–	848K45161	Left Hand Cover Assembly (7545, 7556)
3	059K66721	Duplex Assembly (7545, 7556) (REP 10.2)
–	059K66711	Duplex Assembly (7525, 7530, 7535) (REP 10.2)
4	–	Left Hand Cover (P/O PL 14.2 Item 2)
5	054E43022	Left Hand Cover Chute
6	012E15280	Fuser Link
7	014E64940	Block
8	–	Left Hand Frame Assembly (P/O PL 14.2 Item 2)
9	–	Front Latch (P/O PL 14.2 Item 2)
10	–	Rear Latch (P/O PL 14.2 Item 2)

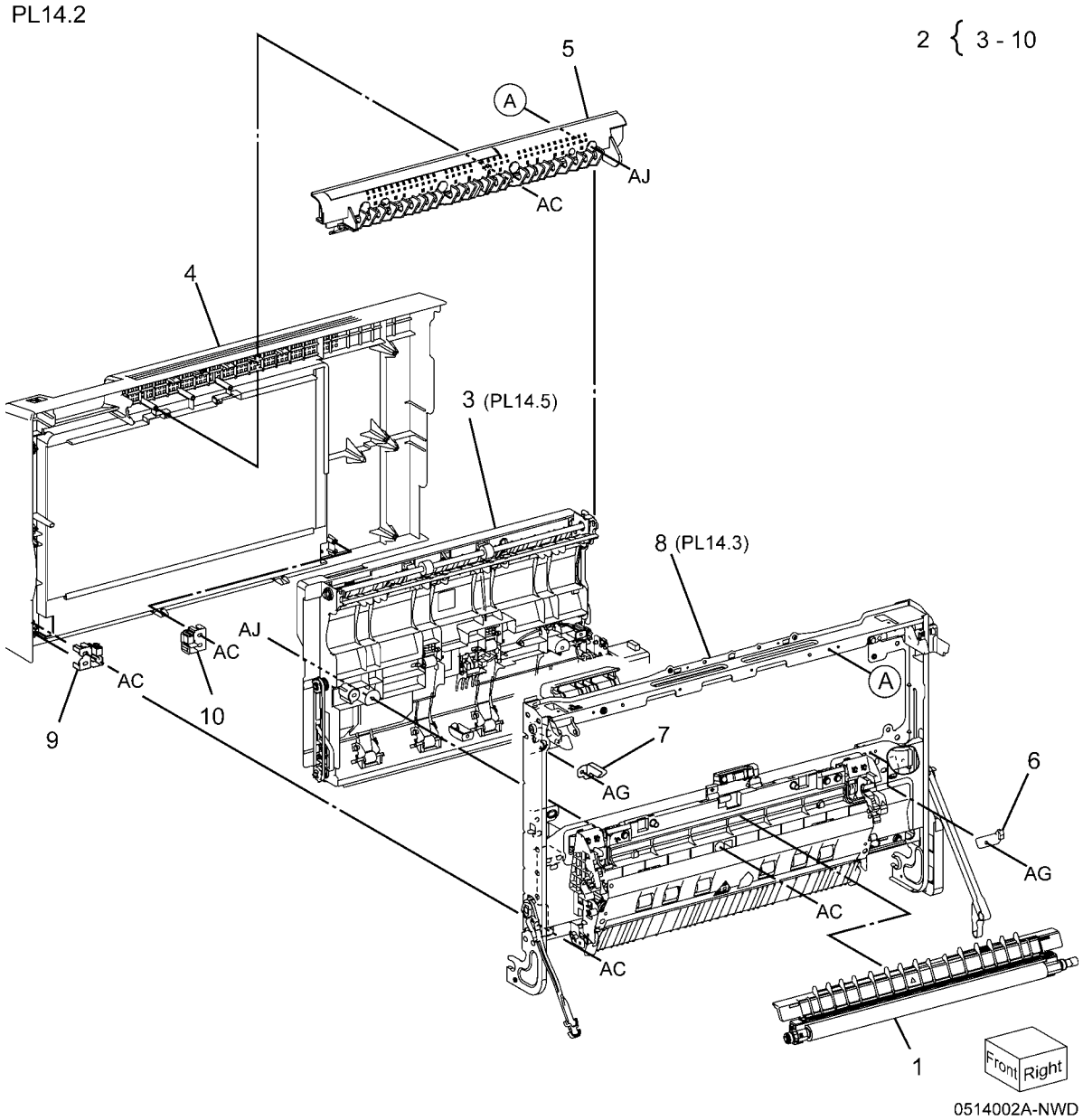

PL 14.3 Left Hand Cover Assembly (1 of 2)

Item	Part	Description
1	849E97370	Rear Support
2	868E05450	Front Support
3	054K42161	Pinch Chute Assembly
4	–	Chute Assembly (P/O PL 14.3 Item 3)
5	059K56660	Pinch Roll Assembly
6	–	Pulley (P/O PL 14.3 Item 3)
7	–	Spring (P/O PL 14.3 Item 3)
8	062E12020	Reflector
9	–	Holder (P/O PL 14.3 Item 3)
10	–	Cap (P/O PL 14.3 Item 3)
11	–	Chute Support (P/O PL 14.2 Item 8)
12	809E65260	Spring
13	054K35160	Duplex Chute Assembly
14	809E76900	Spring
15	848K02612	2nd Bias Housing
16	–	Spring (P/O PL 14.2 Item 8)
17	011E24361	Front Latch Lever
18	011E20740	Rear Latch Lever
19	–	Latch Plate (P/O PL 14.2 Item 8)
20	120E29330	Actuator

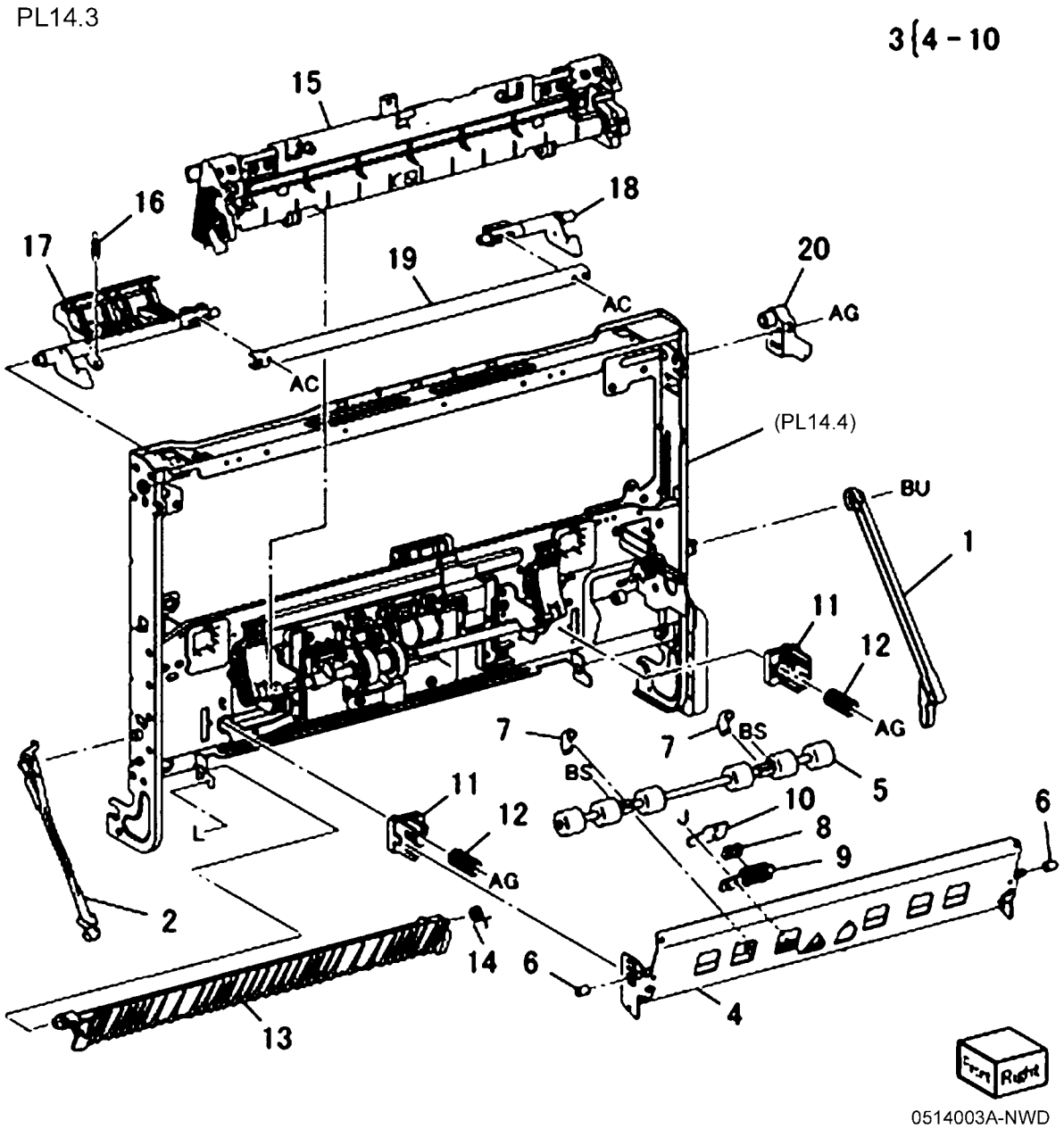

PL 14.4 Left Hand Cover Assembly (2 of 2)

Item	Part	Description
1	–	Harness Holder (P/O PL 14.2 Item 2)
2	–	Harness Holder (P/O PL 14.2 Item 2)
3	–	Frame Assembly (P/O PL 14.2 Item 2)
4	006K86160	Retard Shaft Assembly
5	–	Conductor Assembly (P/O PL 14.2 Item 2)
6	–	Conductor Assembly (P/O PL 14.2 Item 2)
7	930W00111	2nd BTR Contact Retract Sensor
8	127K52251	2nd BTR Contact Retract Motor Assembly
9	–	Sensor Holder (P/O PL 14.2 Item 2)
10	130K87770	POB Sensor
11	962K78500	Harness Assembly (7545, 7556)
–	962K79270	Harness Assembly (7525, 7530, 7535)
12	012K94970	2nd Link Assembly
13	413W11360	Sleeve Bearing
14	–	Shaft (P/O PL 14.2 Item 2)
15	–	Harness Guide (P/O PL 14.4 Item 4)
16	–	Harness Guide (P/O PL 14.4 Item 4)
17	–	Retract Shaft (P/O PL 14.4 Item 4)
18	–	Retract Cam (P/O PL 14.4 Item 4) (ACO)
19	–	Pin (P/O PL 14.4 Item 4)
20	120E28260	Retract Actuator
21	413W14860	Bearing

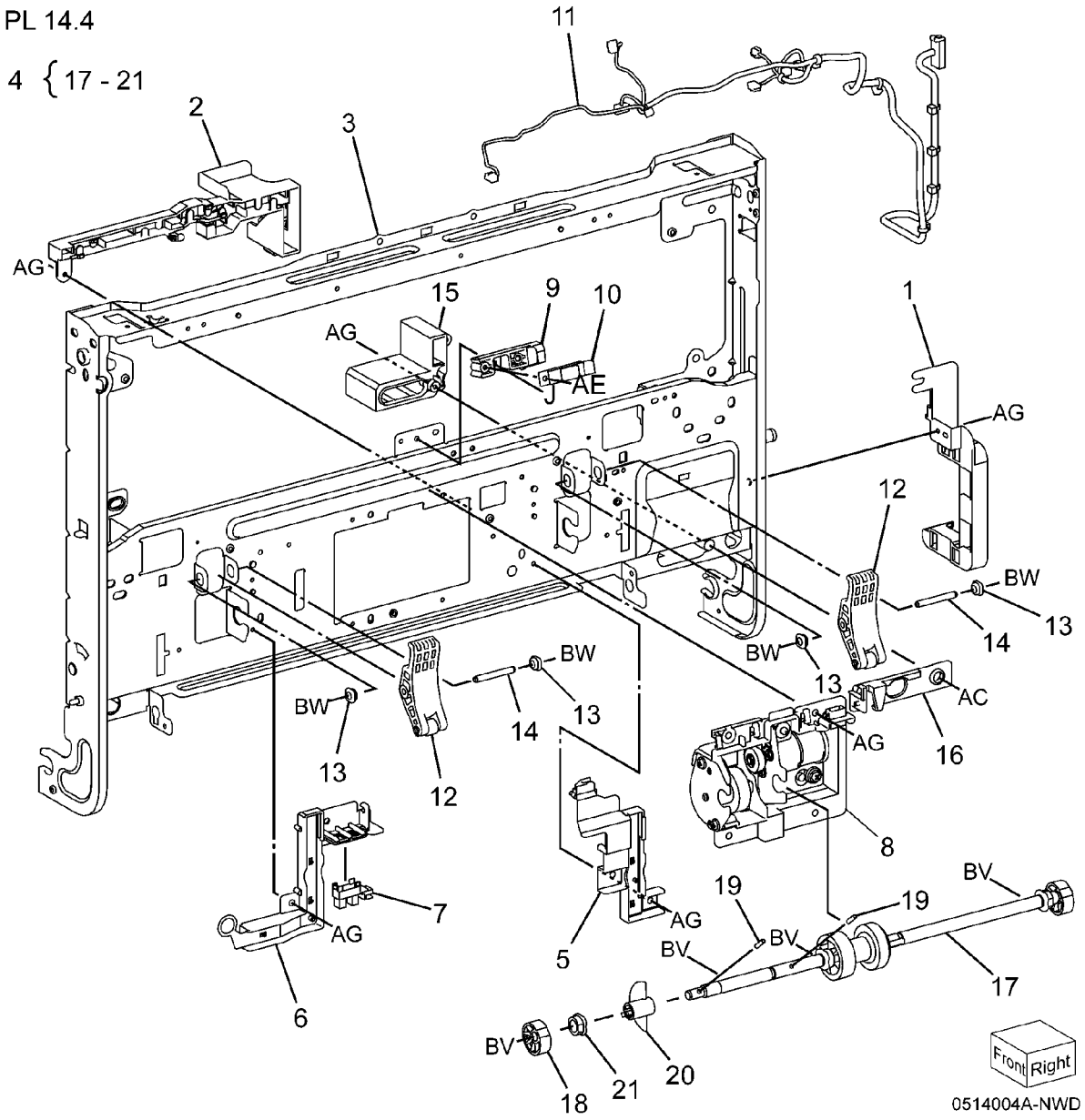

PL 14.5 Duplex Assembly (1 of 2)

Item	Part	Description
1	848E24142	Duplex Cover
2	011E23681	Duplex Lever
3	–	Level Cover (Not Spared)
4	930W00113	Duplex Wait Sensor
5	809E75990	Spring
6	127K58390	Duplex Motor (7525, 7530, 7535)
–	127K60820	Duplex Motor (7545, 7556)
7	962K60701	Wire Harness
8	413W11360	Duplex Cover Switch
9	120E32340	Actuator
10	809E75960	Spring

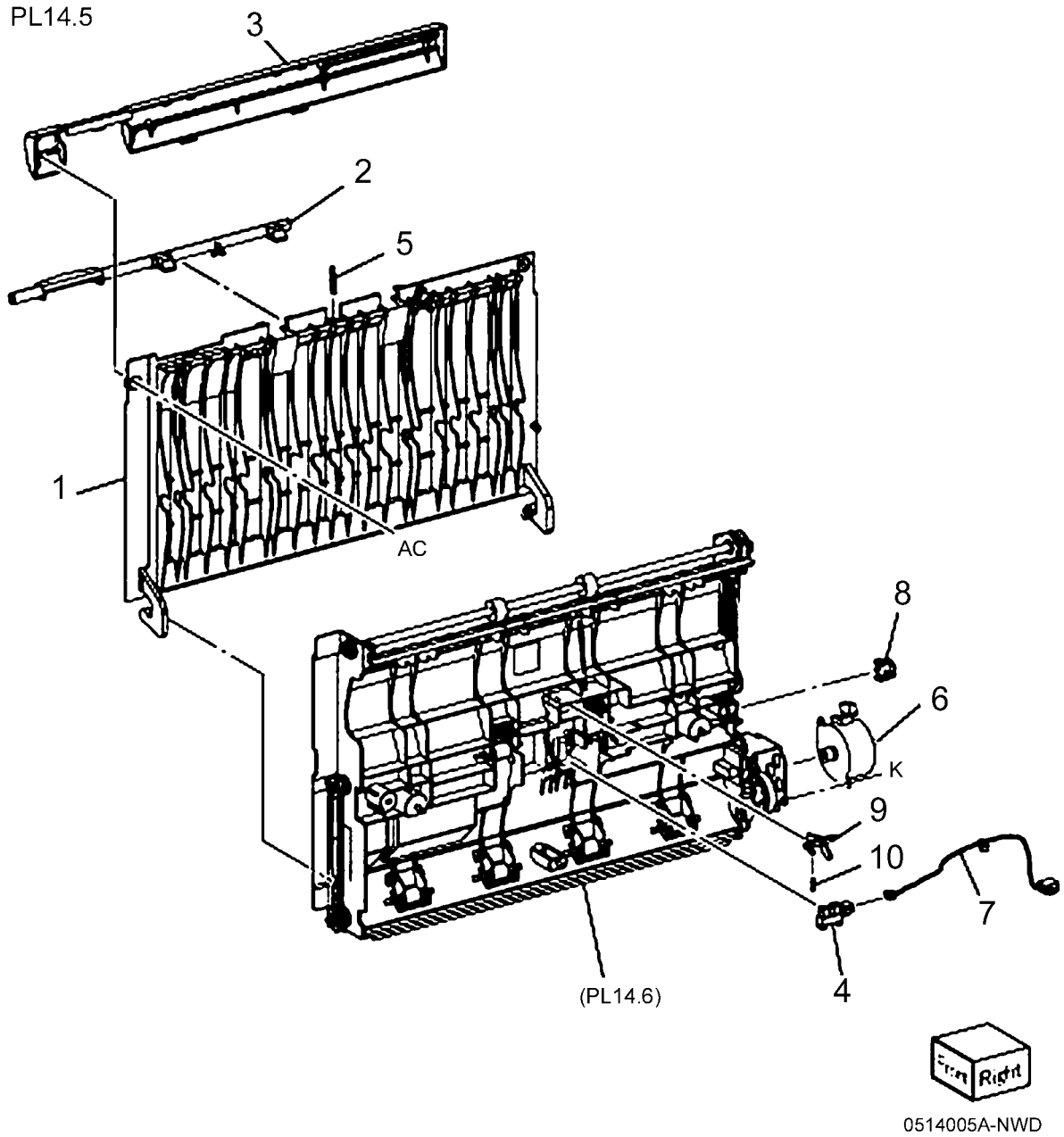

PL 14.6 Duplex Assembly (2 of 2)

Item	Part	Description
1	–	Inner Chute (P/O PL 14.2 Item 3)
2	059E04010	Duplex Pinch Roll (7525, 7530, 7535)
3	809E89870	Pinch Spring 1
4	809E75530	Pinch Spring 2
5	–	Lower Chute (P/O PL 14.2 Item 3)
6	059K53880	Duplex Roller 1
7	059K53890	Duplex Roller 2
8	059K53900	Duplex Roller 3 (W/O TAG P-001)
–	–	Duplex Roller 3 (P/O PL 14.6 Item 20) (W/TAG P-001)
9	–	Duplex Rear Frame (P/O PL 14.2 Item 3)
10	807E30550	Idle Gear (13T/23T) (7545, 7555)
–	807E21210	Idle Gear (13T/46T) (7525, 7530, 7535)
11	029E45400	Pin
12	007K14860	Gear Assembly (W/O TAG P-001)
–	–	Helical Gear (P/O PL 14.6 Item 20) (W/TAG P-001)
13	–	Sleeve Bearing (P/O PL 14.2 Item 3)
14	–	Sleeve Bearing (P/O PL 14.2 Item 3)
15	023E26770	Belt
16	023E27480	Belt
17	020E45140	Pulley
18	806E31100	Shaft (7545, 7556)
19	059E06380	Duplex Pinch Roll (7545, 7556)
20	604K63890	Duplex Roller Kit (W/TAG P-001)

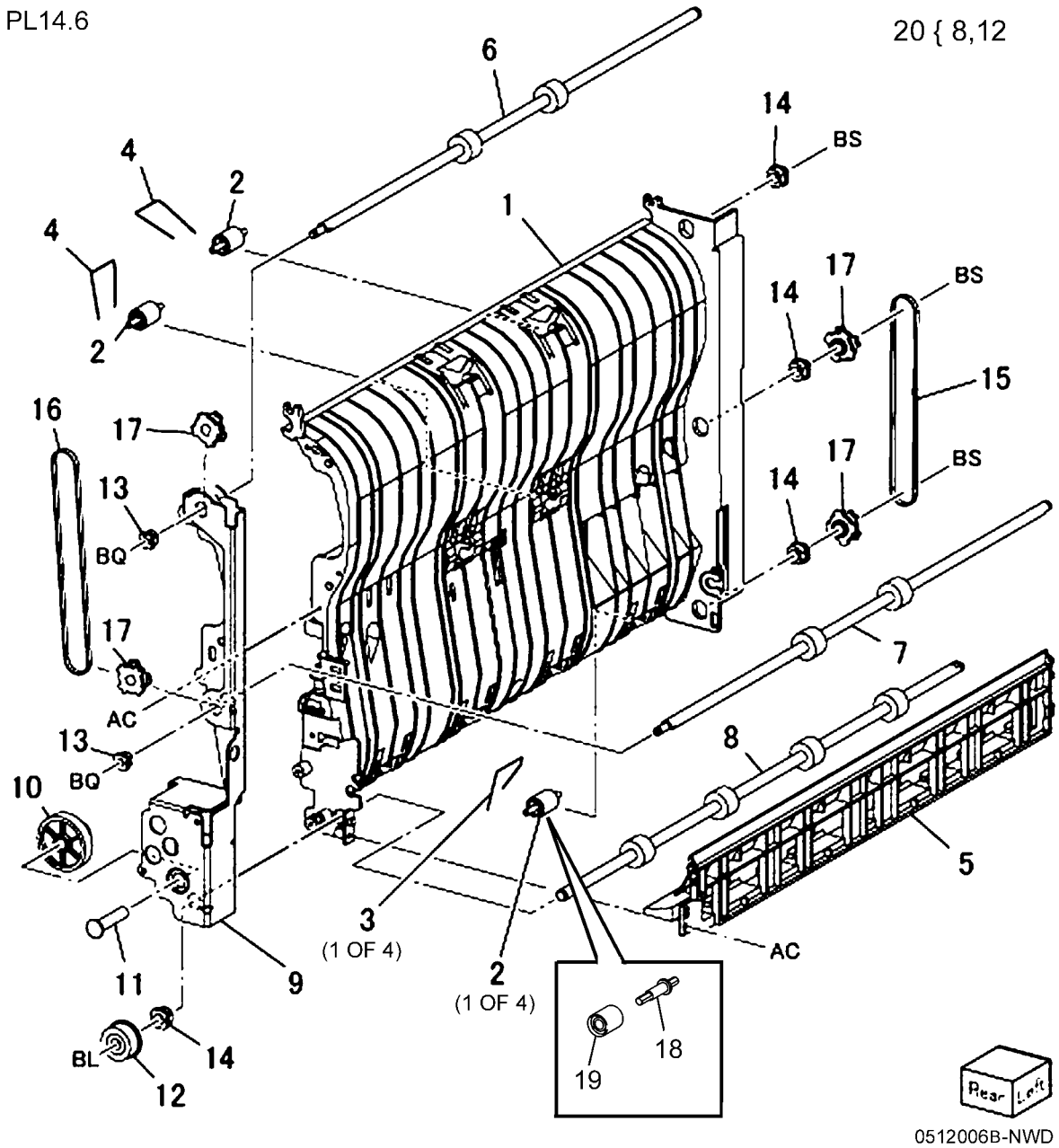

PL 15.1 Registration (1 of 2)

Item	Part	Description
1	121K41242	Takeaway Clutch (7525, 7530, 7535)
2	806E21441	Shaft (7525, 7530, 7535)
3	807E20050	Gear (40T)
4	013E33420	Bearing
5	013E33460	Takeaway Bearing (7525, 7530, 7535)
6	–	Bracket (Not Spared) (7525, 7530, 7535)
7	–	Bracket (Not Spared)
8	059K66652	Registration Transport Assembly (REP 7.24)
9	127K60770	Take Away Motor (7545, 7556)
10	806E30580	Shaft (7545, 7556)
11	013E36280	Bearing (7545, 7556)
12	068K67130	Bracket (7545, 7556)
13	807E30540	Gear (29T) (7545, 7556)
14	807E30531	Gear (60T) (7545, 7556)

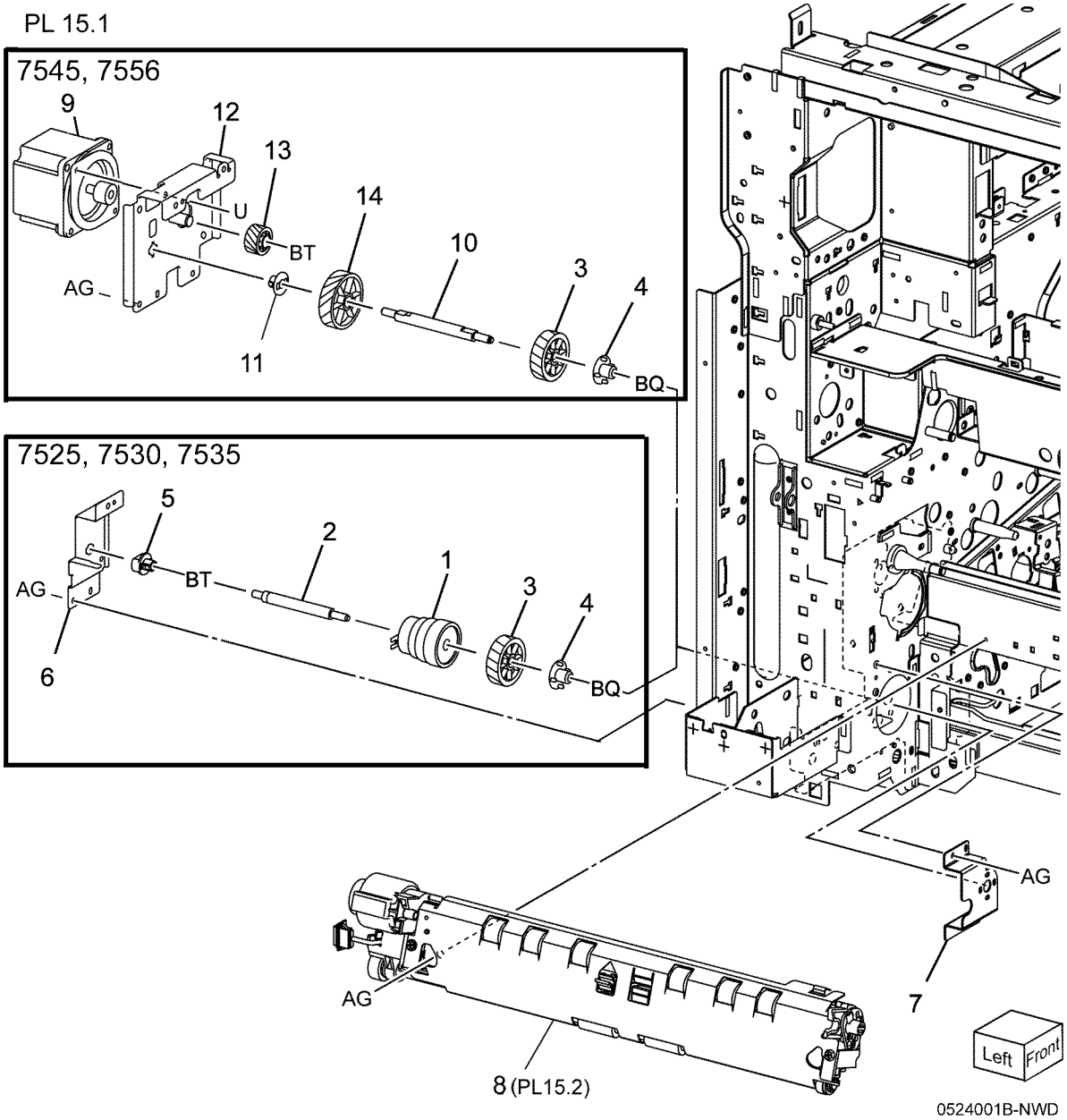

PL 15.2 Registration (2 of 2)

Item	Part	Description
1	059K75590	Registration Roll
2	013E40520	Bearing
3	413W11860	Sleeve Bearing
4	121K46000	Registration Clutch
5	054E33634	Registration Chute
6	054K46580	Inlet Chute Assembly
7	130K69250	OHP Sensor
8	–	Cap (P/O PL 15.1 Item 8)
9	019E70090	Sensor Holder
10	930W00111	Registration Sensor
11	120E29700	Actuator
12	809E78760	Spring
13	–	Registration Wire Harness (P/O PL 15.1 Item 8)
14	014E60380	Skew Adjust Block
15	103E45060	Inlet Resistor
16	–	Conductor (In) (P/O PL 15.1 Item 8)
17	–	Conductor (Out) (P/O PL 15.1 Item 8)
18	059K53370	Takeaway Roll
19	807E20190	Gear (23T)
20	–	Conductor (P/O PL 15.1 Item 8)
21	–	Conductor (P/O PL 15.1 Item 8)

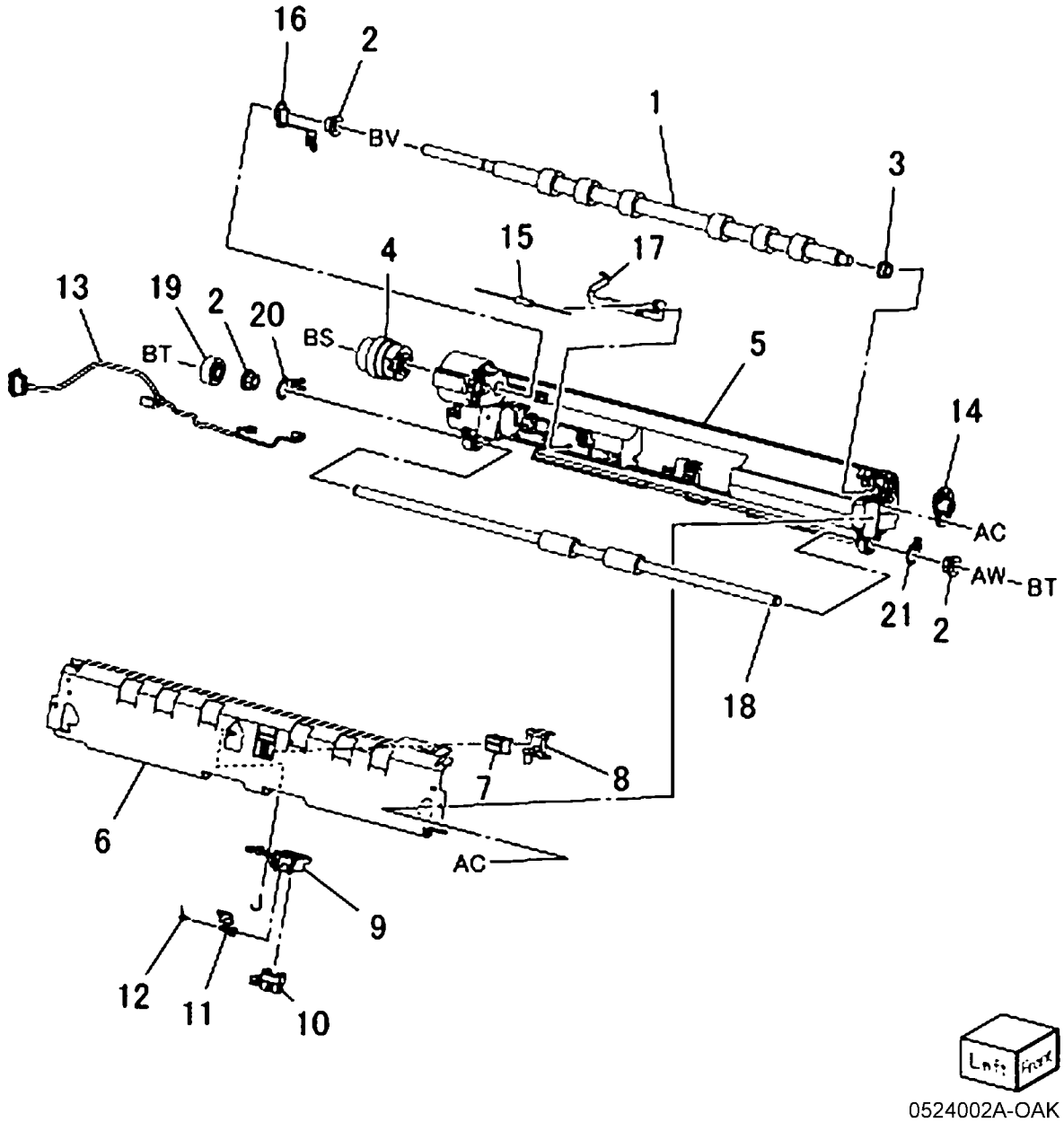

0524002A-OAK

PL 17.1 Exit 1/OCT, Exit 2

Item	Part	Description
1	–	Exit/OCT 1 Assembly (REF: PL 17.2) (REP 11.1)
2	–	Motor Cover (Not Spared)
3	–	Washer (Not Spared)
4	930W00113	Exit 1 OCT Home Position Sensor
5	807E20620	Gear (19T)
6	013E33410	Bearing
7	036K92030	Paper Weight
8	059K68325	Exit 2 Assembly (7545, 7556)
–	059K68315	Exit 2 Assembly (7525, 7530, 7535) (REP 11.2)
9	055E58970	Exit 1 Guard

PL 17.1

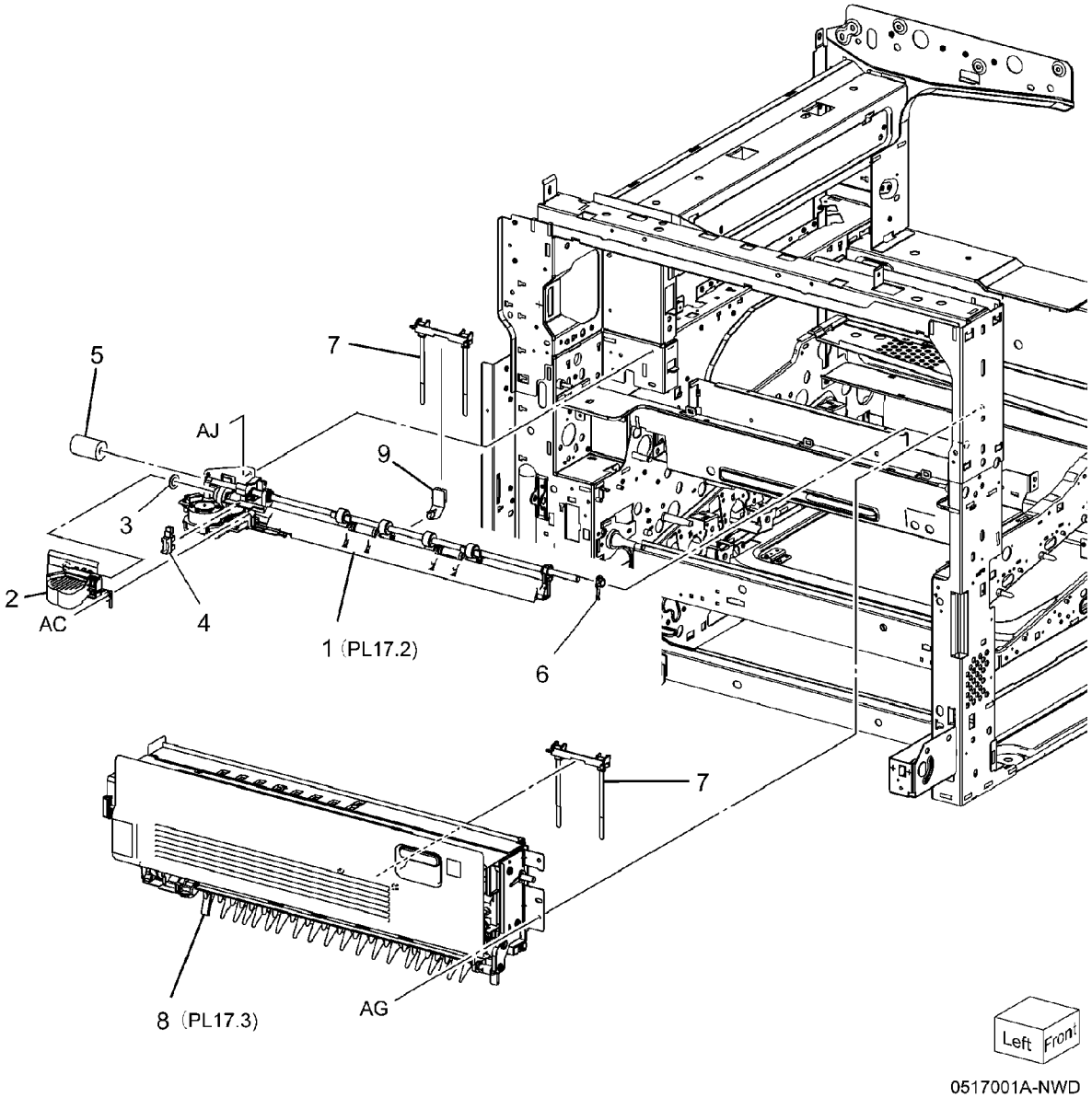

PL 17.2 Exit 1/OCT

Item	Part	Description
1	801K42601	Exit 1 Base Assembly (7545, 7556)
–	801K42591	Exit 1 Base Assembly (7525, 7530, 7535)
2	–	Exit 1 Base (P/O PL 17.2 Item 1)
3	–	Exit 1 Gear (P/O PL 17.2 Item 1)
4	127K60880	Exit 1 OCT Motor (7545, 7556)
–	127K52280	Exit 1 OCT Motor (7525, 7530, 7535)
5	–	OCT Gear (P/O PL 17.2 Item 1)
6	013E30050	Bearing (P/O PL 17.2 Item 1)
7	–	Ground Plate (Not Spared)
8	–	OCT Chute (Not Spared)
9	–	OCT 1 Roller
10	–	Exit Pinch Spring
11	413W11660	Sleeve Bearing
12	059K65781	Exit Pinch Roller
13	054K44141	Oct 1 Assembly
14	–	Sensor (P/O PL 17.2 Item 1)
15	–	Exit Guard (P/O PL 17.2 Item 13)

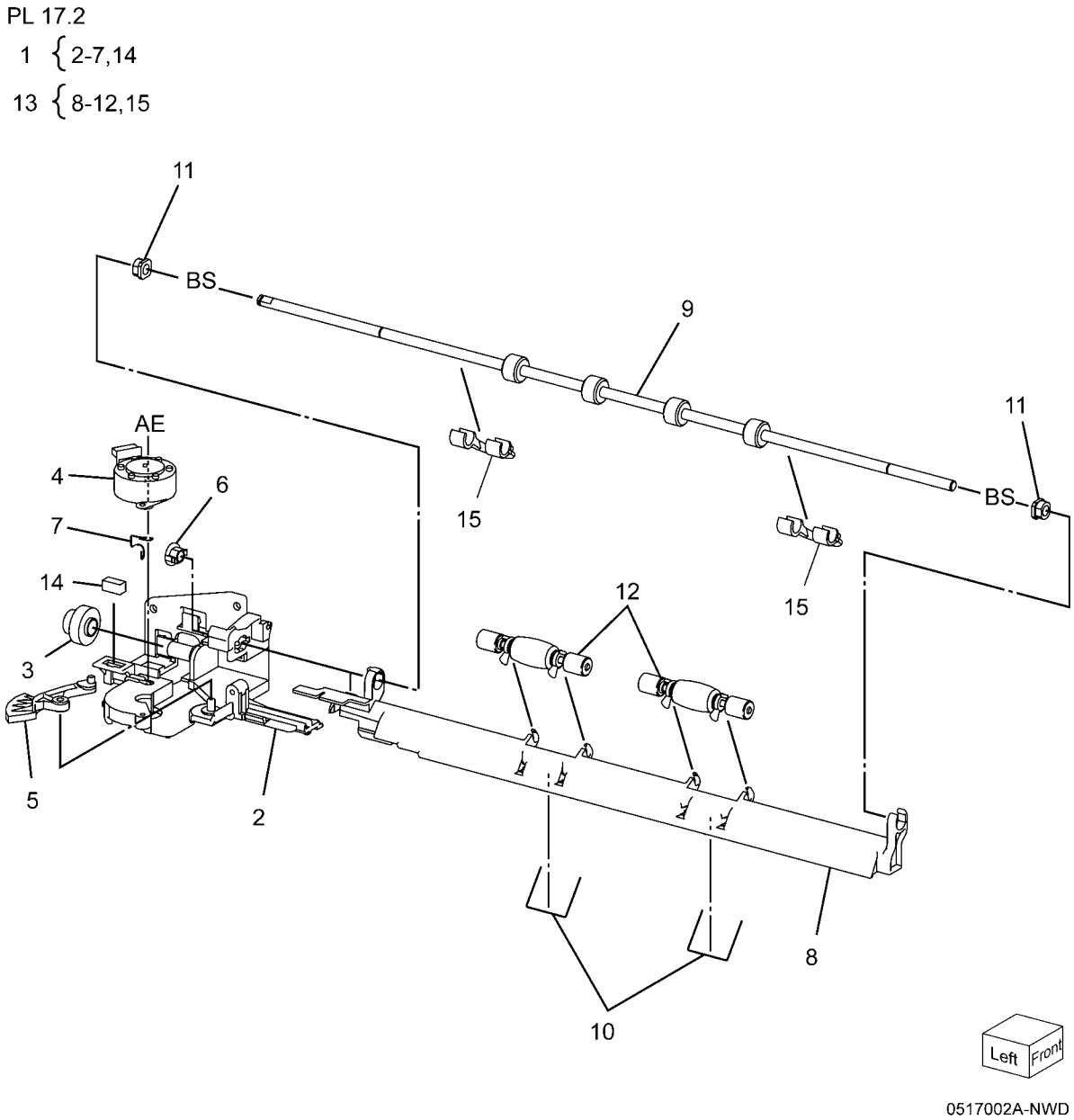

PL 17.3 Exit 2 (1 of 3)

Item	Part	Description
1	003E76760	Exit 2 Front Stopper
2	–	Bearing (P/O PL 17.1 Item 8)
3	–	Exit 2 Chute (Not Spared)
4	054E41621	Left Hand High Chute
5	059K53741	Inverter Roll
6	413W14760	Sleeve Bearing
7	–	Gear (22T) (P/O PL 17.1 Item 8)
8	–	Ground Plate (P/O PL 17.1 Item 8)
9	–	Exit 2 Drive Assembly (P/O PL 17.1 Item 8)
10	–	Tray 2 Guide (P/O PL 17.3 Item 17)
11	–	Gate 1 Spring (P/O PL 17.3 Item 17)
12	–	Exit Gate (P/O PL 17.3 Item 17)
13	–	Ground Plate (P/O PL 17.3 Item 17)
14	105E19750	Eliminator
15	–	Gate Stopper (P/O PL 17.3 Item 17)
16	–	Ground Plate (P/O PL 17.3 Item 17)
17	038K20232	Exit 2 Guide Assembly
18	003E75360	Exit 2 Stopper
19	–	Gear (52T) (P/O PL 17.1 Item 8)
20	–	Gear Cover (P/O PL 17.1 Item 8)

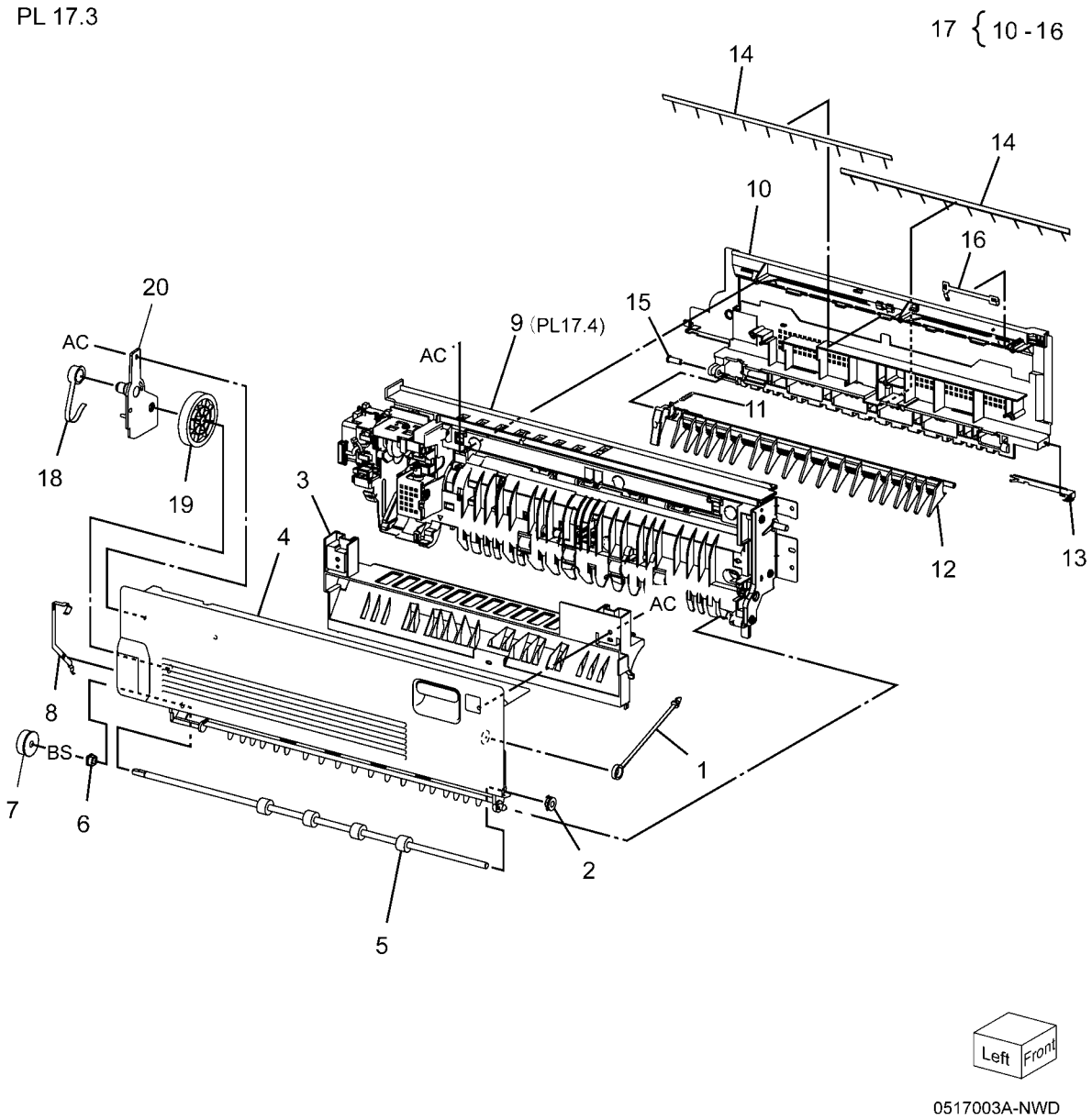

PL 17.4 Exit 2 (2 of 3)

Item	Part	Description
1	–	Exit 2 OCT Assembly (P/O PL 17.1 Item 8)
2	059E98780	Actuator Roller
3	110E11580	Face Up Tray Detect Switch; L/H High Cover Switch
4	–	Actuator (P/O PL 17.1 Item 8)
5	127K58400	Exit 2 Drive Motor (7525, 7530, 7535)
–	127K60830	Exit 2 Drive Motor (7545, 7556)
6	–	Wire Harness (Exit 2) (P/O PL 17.1 Item 8)
7	806E14120	Gear Shaft
8	807E20410	Gear (28T)
9	807E30560	Gear (16T/23T) (7545, 7556)
–	807E20430	Gear (16T/48T) (7525, 7530, 7535)
10	809E37332	Spring
11	–	Rear Cover (P/O PL 17.1 Item 8)
12	–	Shaft Cover (P/O PL 17.1 Item 8)
13	–	Rear Bracket (P/O PL 17.1 Item 8)
14	930W00113	Exit 2, OCT Home Position, Exit 2 Sensor
15	–	Switch Cover (Not Spared)
16	868E40890	Motor Bracket (7545, 7556)
17	806E31110	Gear Shaft (7545, 7556)

PL 17.4

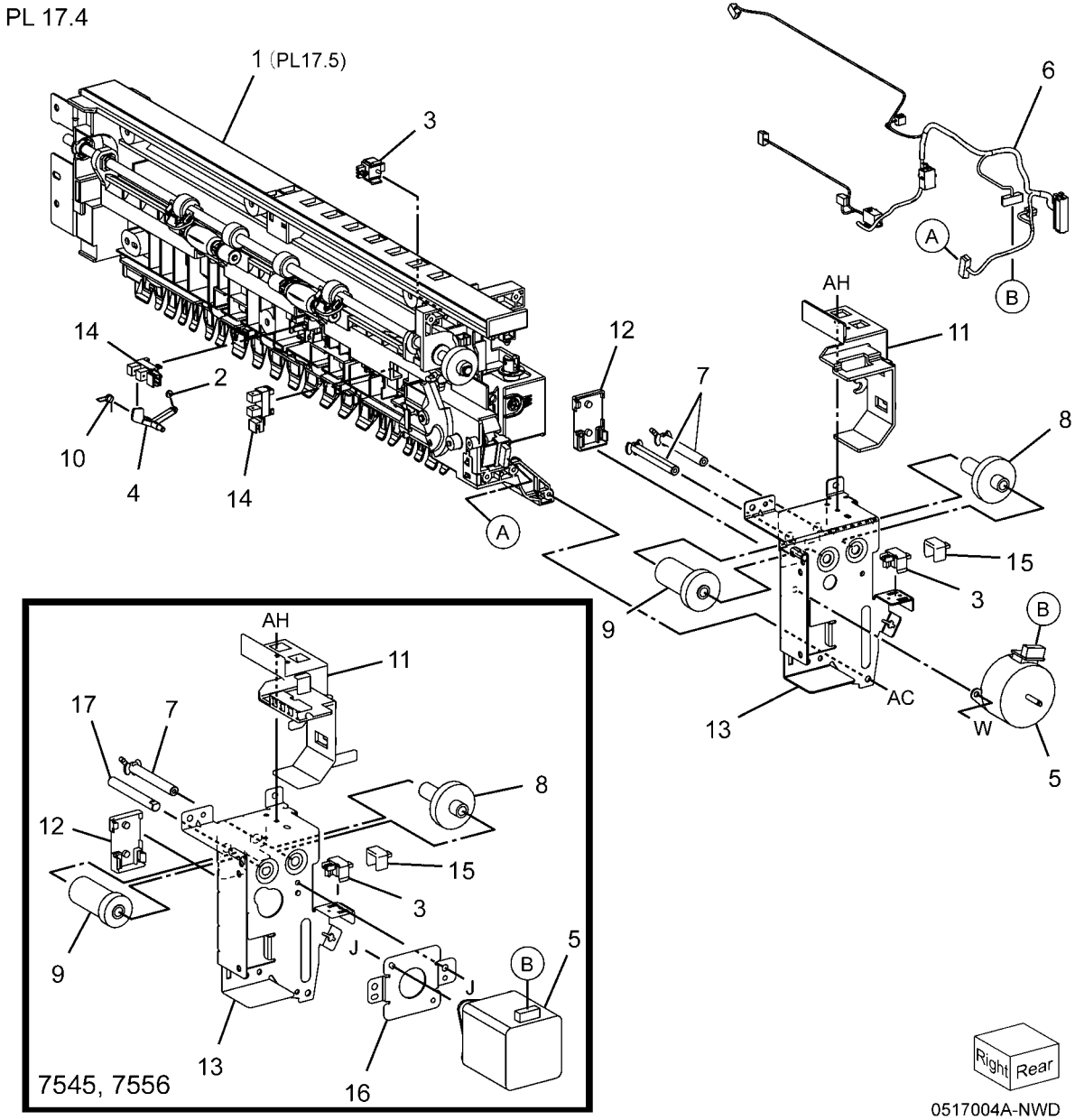

PL 17.5 Exit 2 (3 of 3)

Item	Part	Description
1	–	Exit Gate Link (P/O PL 17.1 Item 8)
2	–	Face Up Gate Solenoid Link (P/O PL 17.1 Item 8)
3	–	Bearing (P/O PL 17.1 Item 8)
4	013E33410	Bearing
5	–	OCT 2 Chute (P/O PL 17.1 Item 8)
6	–	Low 2 Chute (P/O PL 17.1 Item 8)
7	059K65780	Exit Pinch Roller
8	059E03531	Inverter Pinch Roll
9	–	OCT Roller (P/O PL 17.1 Item 8)
10	921W11601	Exit 2 Gate Solenoid; Face Up Gate Solenoid
11	127K52280	Exit 2 OCT Motor
12	413W11660	Sleeve Bearing
13	–	Inverter Pinch Shaft (P/O PL 17.1 Item 8)
14	807E00211	Offset 2 Gear
15	–	Gear (22T) (P/O PL 17.1 Item 8)
16	809E99520	Exit Pinch Spring
17	809E75460	Inverter Pinch Spring
18	–	Ground Plate (P/O PL 17.1 Item 8)
19	–	Exit 2 Gate Solenoid Cover (P/O PL 11.1 Item 8)
20	–	Face Up Gate Solenoid Cover (P/O PL 17.1 Item 8)
21	–	Connector Cover (P/O PL 17.1 Item 8)
22	055E57521	Exit Guard
23	–	Motor Cover (Not Spared)

PL 17.5

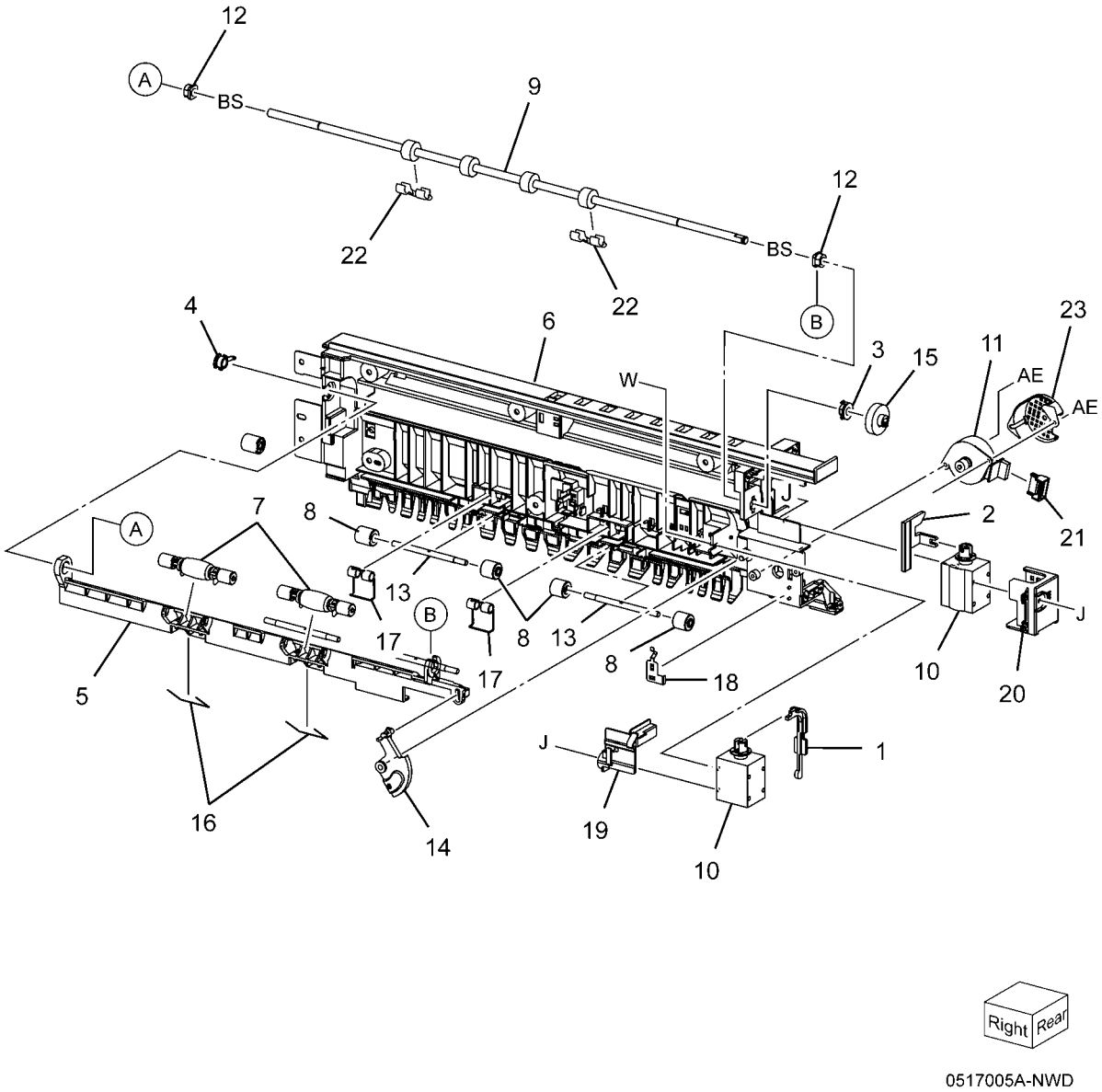

0517005A-NWD

PL 17.6 Side Tray Unit (1 of 2)

Item	Part	Description
1	848E21532	Tray Cover
2	050K62502	Left Side Output Tray
3	–	Left Side Output Tray Transport Assembly (Not Spared)
4	803E05760	Latch Handle
5	–	Exit 2 Gate (P/O PL 17.6 Item 3)
6	–	Upper Chute (P/O PL 17.6 Item 3)
7	–	Pinch Roll (P/O PL 17.6 Item 3)
8	–	Spring (P/O PL 17.6 Item 3)
9	–	Pinch Spring (P/O PL 17.6 Item 3)
10	–	Spring (P/O PL 17.6 Item 3)
11	–	Transport Roll Assembly (P/O PL 17.6 Item 3)

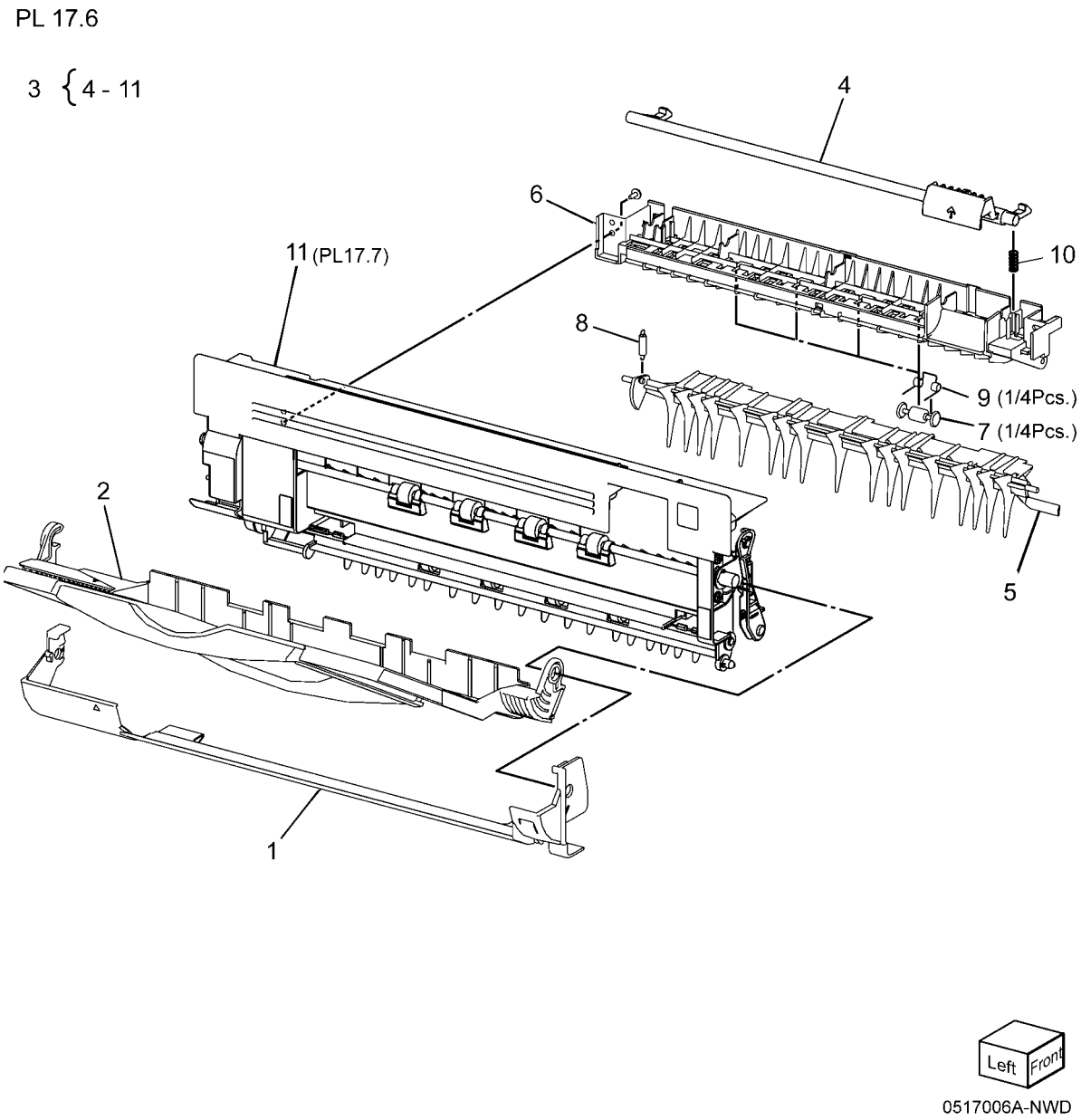

PL 17.7 Side Tray Unit (2 of 2)

Item	Part	Description
1	–	Link (P/O PL 17.6 Item 11)
2	–	Link Bracket (P/O PL 17.6 Item 11)
3	–	Spacer (P/O PL 17.6 Item 11)
4	013E30050	Bearing
5	059K53741	Inverter Roll
6	059K53750	Roll
7	413W14660	Bearing
8	807E00160	Gear (52T)
9	807E11820	Gear (22T)
10	–	Gear Cover (P/O PL 17.6 Item 11)
11	–	Tray Support (P/O PL 17.6 Item 11)
12	055E56571	Exit Guard
13	–	Cover Assembly (P/O PL 17.6 Item 11)
14	–	Gear (P/O PL 17.6 Item 11)

PL 17.7

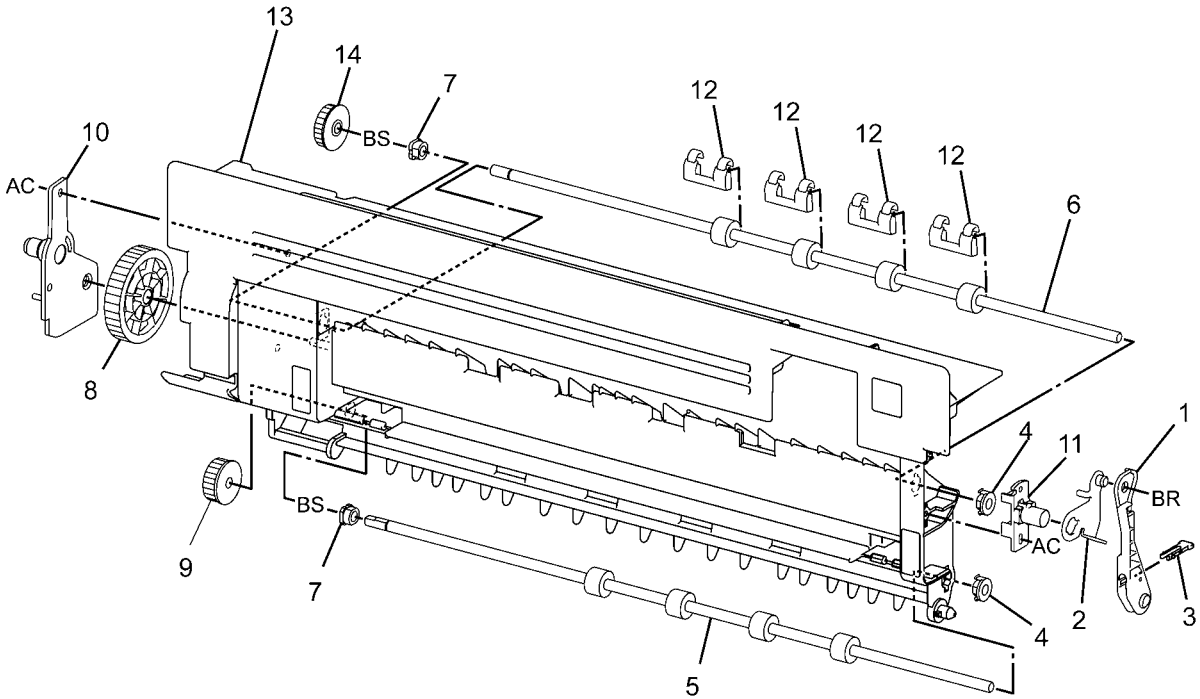

0517007A-NWD

PL 18.1 PWB Chassis Unit (1 of 2)

Item	Part	Description
1	–	PWB Chassis Unit (Not Spared)
2	117K39082	IIT Control Cable

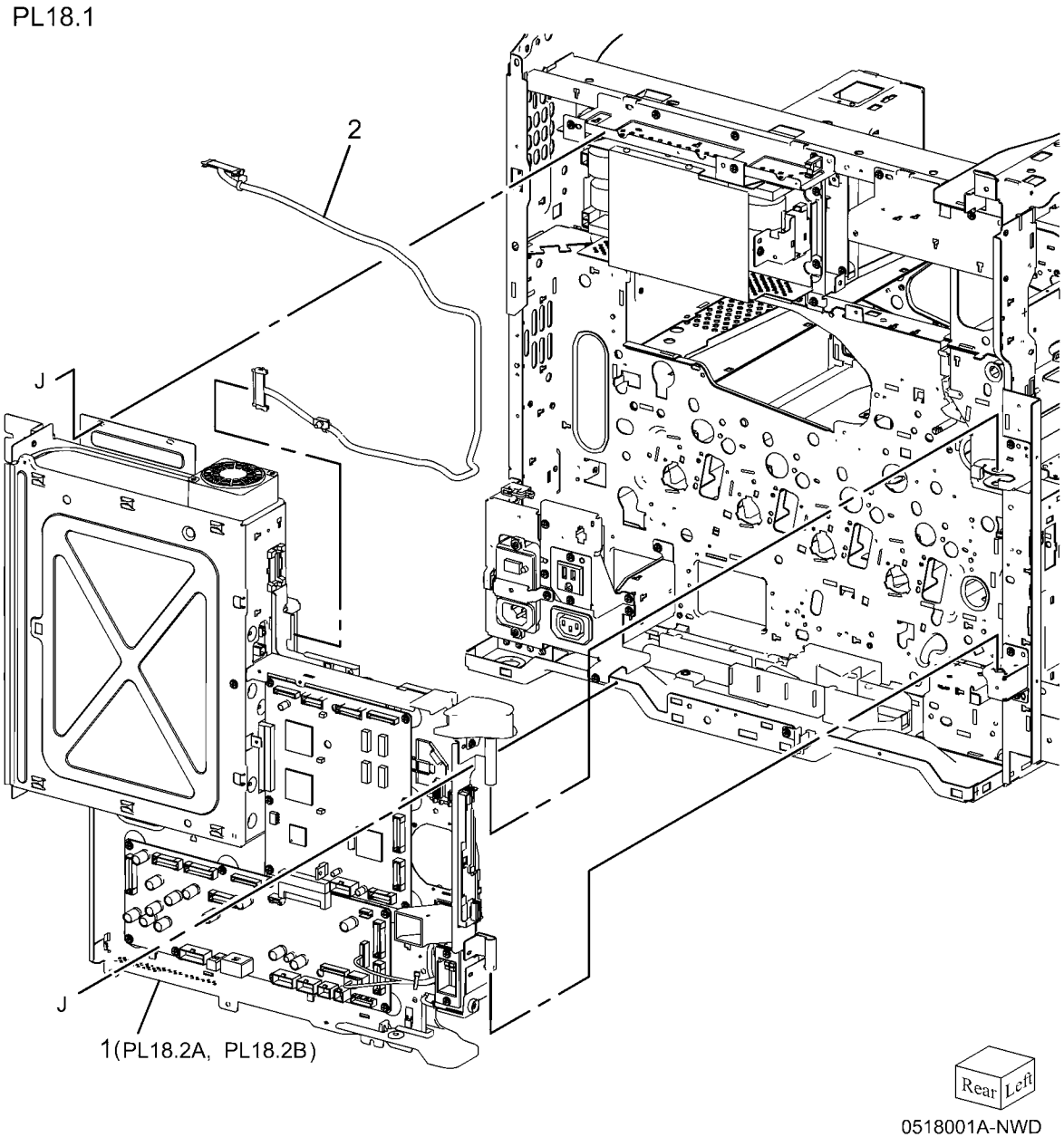

PL 18.2A PWB Chassis Unit (7525, 7530, 7535)

Item	Part	Description
1	960K48060	Backplane PWB (REP 1.3)
2	–	Fan Wire Harness (P/O PL 18.2A Item 18)
3	–	Cable Holder (P/O PL 18.2A Item 18)
4	–	SBC Cover (P/O PL 18.2A Item 18)
5	–	SBC Fan (P/O PL 18.2A Item 18)
6	127K64490	Suction Fan (P/O PL 18.2A Item 18)
7	–	Screw (Not Spared)
8	–	Chassis Assembly (P/O PL 18.2A Item 18)
9	–	Fan Guard (P/O PL 18.2A Item 18)
10	–	Connector (P/O PL 18.2A Item 18)
11	–	Harness Guide (P/O PL 18.2A Item 18)
12	–	Bracket (P/O PL 18.2A Item 18)
13	–	Shield (P/O PL 18.2A Item 18)
14	–	EEPROM (P/O PL 18.2A Item 18)
15	960K54846	MCU PWBA (REP 1.4)
16	960K55081	MD PWB (REP 1.5)
17	962K67180	HCF IF Connector
18	101K60913	PWB Chassis

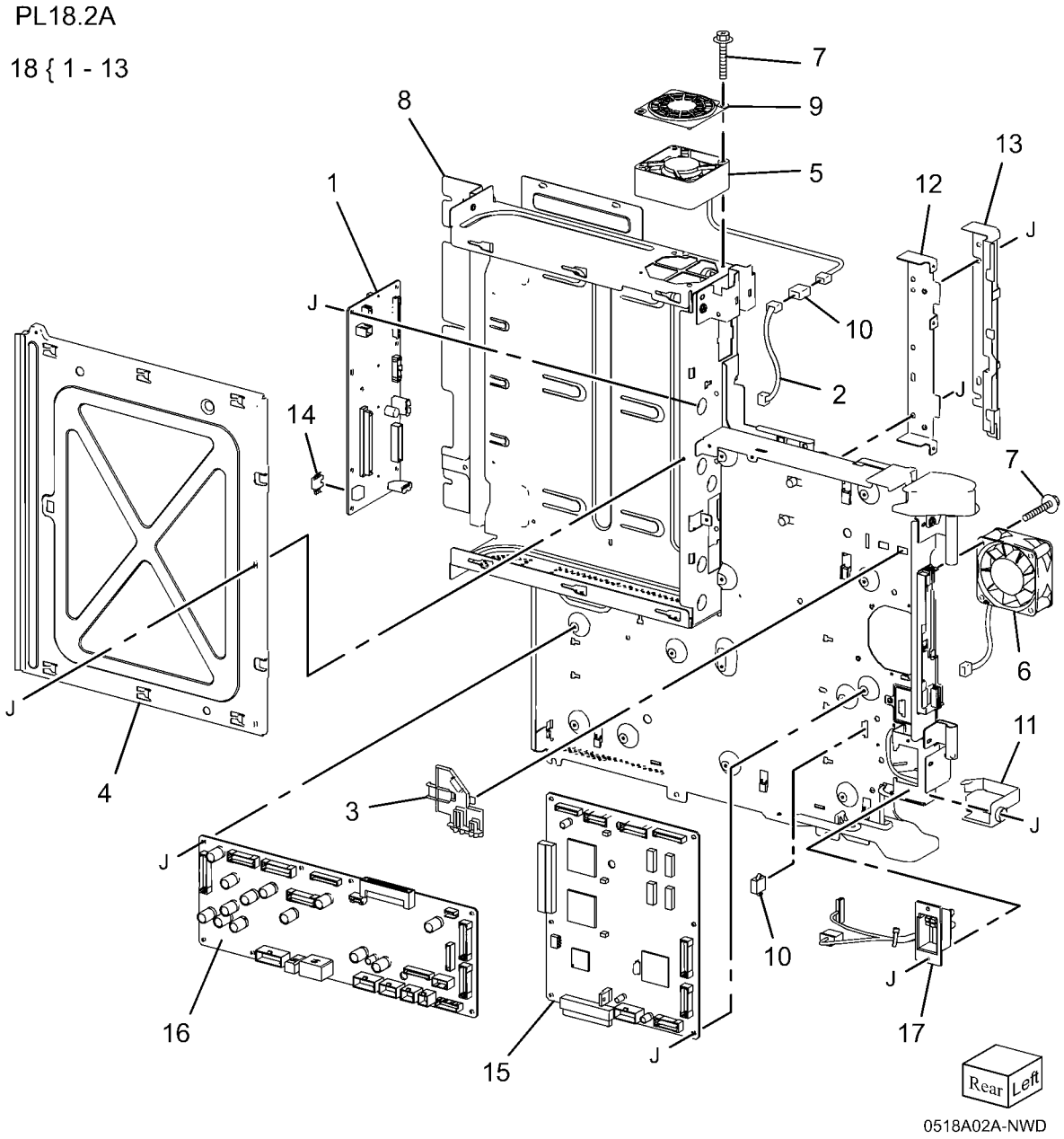

PL 18.2B PWB Chassis Unit (7545, 7556)

Item	Part	Description
1	960K48060	Backplane PWB (REP 1.3)
2	–	Fan Wire Harness (P/O PL 18.2B Item 21)
3	–	Cable Holder (P/O PL 18.2B Item 21)
4	–	SBC Cover (P/O PL 18.2B Item 21)
5	–	SBC Fan (P/O PL 18.2B Item 21)
6	127K60710	Suction Fan (P/O PL 18.2B Item 21)
7	–	Screw (P/O PL 18.2B Item 21)
8	–	Chassis Assembly (P/O PL 18.2B Item 21)
9	–	Fan Guard (P/O PL 18.2B Item 21)
10	–	Connector (P/O PL 18.2B Item 21)
11	–	Harness Guide (P/O PL 18.2B Item 21)
12	–	Bracket (P/O PL 18.2B Item 21)
13	–	Shield (P/O PL 18.2B Item 21)
14	–	Duct (P/O PL 18.2B Item 21, PL 18.2B Item 22)
15	–	Duct (P/O PL 18.2B Item 22, PL 18.2B Item 21)
16	–	Screw (P/O PL 18.2B Item 21)
17	–	EEPROM (Not Spared)
18	960K54856	MCU PWBA (REP 1.4)
19	960K55091	MD PWB (REP 1.5)
20	962K67180	HCF IF Connector
21	101K60913	PWB Chassis
22	054K41570	Duct Assembly

PL18.2B

21 { 1 - 16

22 { 14, 15

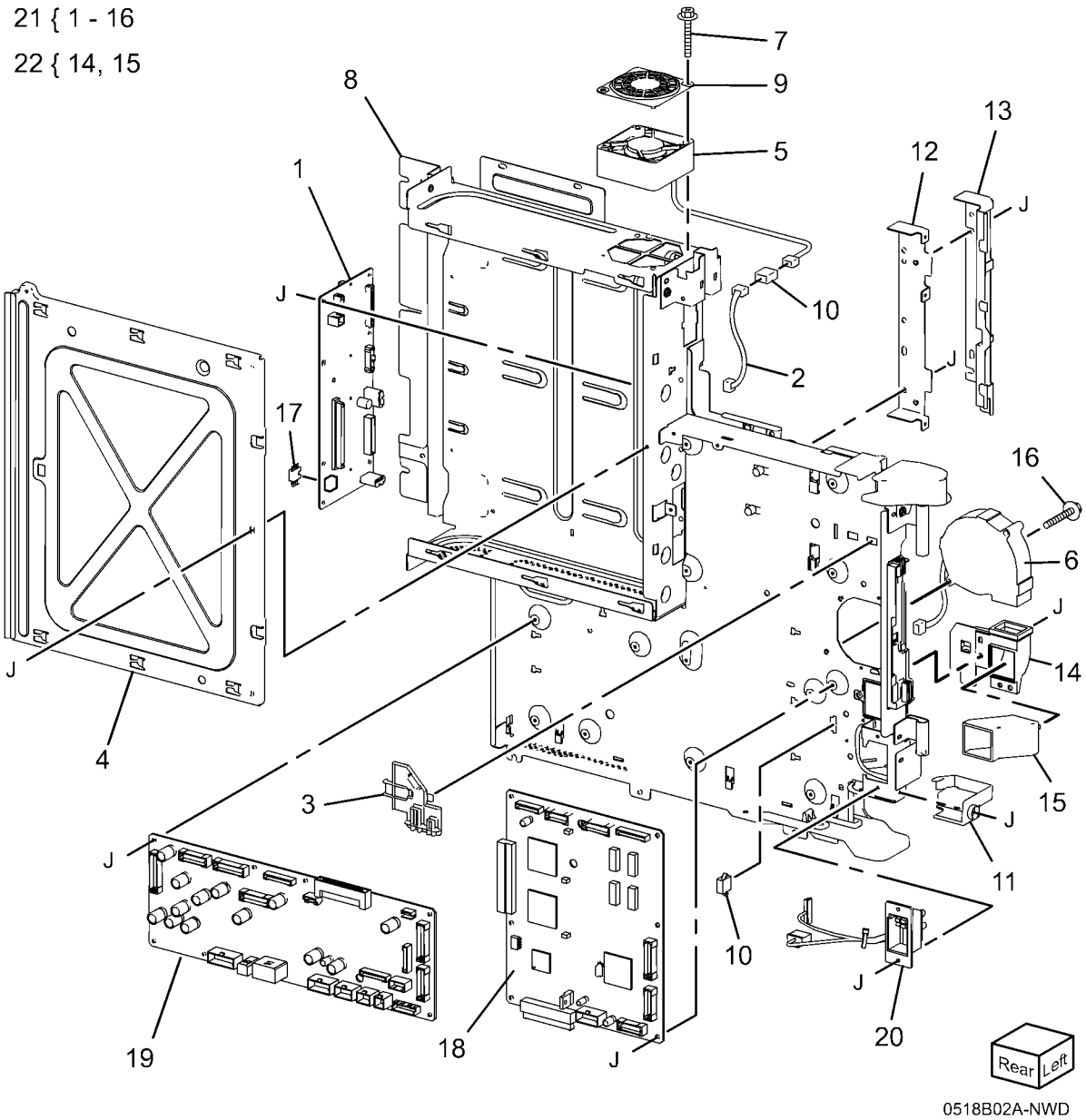

PL 18.3 IOT Rear

Item	Part	Description
1	–	Harness Guide (Not Spared)
2	–	Harness Guide (Not Spared)
3	–	GFI Chassis Assembly (Not Spared)
4	105E19793	IH PWB (220V)
–	105E19802	IH PWB (110V)
5	962K79140	Fuser Harness (7525, 7530, 7535)
–	962K78700	Fuser Harness (7545, 7556)
6	–	Shield (Not Spared)
7	105E19210	Sub LVPS (7545, 7556 ONLY)
8	–	Bracket (Not Spared) (7545, 7556)
9	–	Harness Guide (FAX)

PL18.3

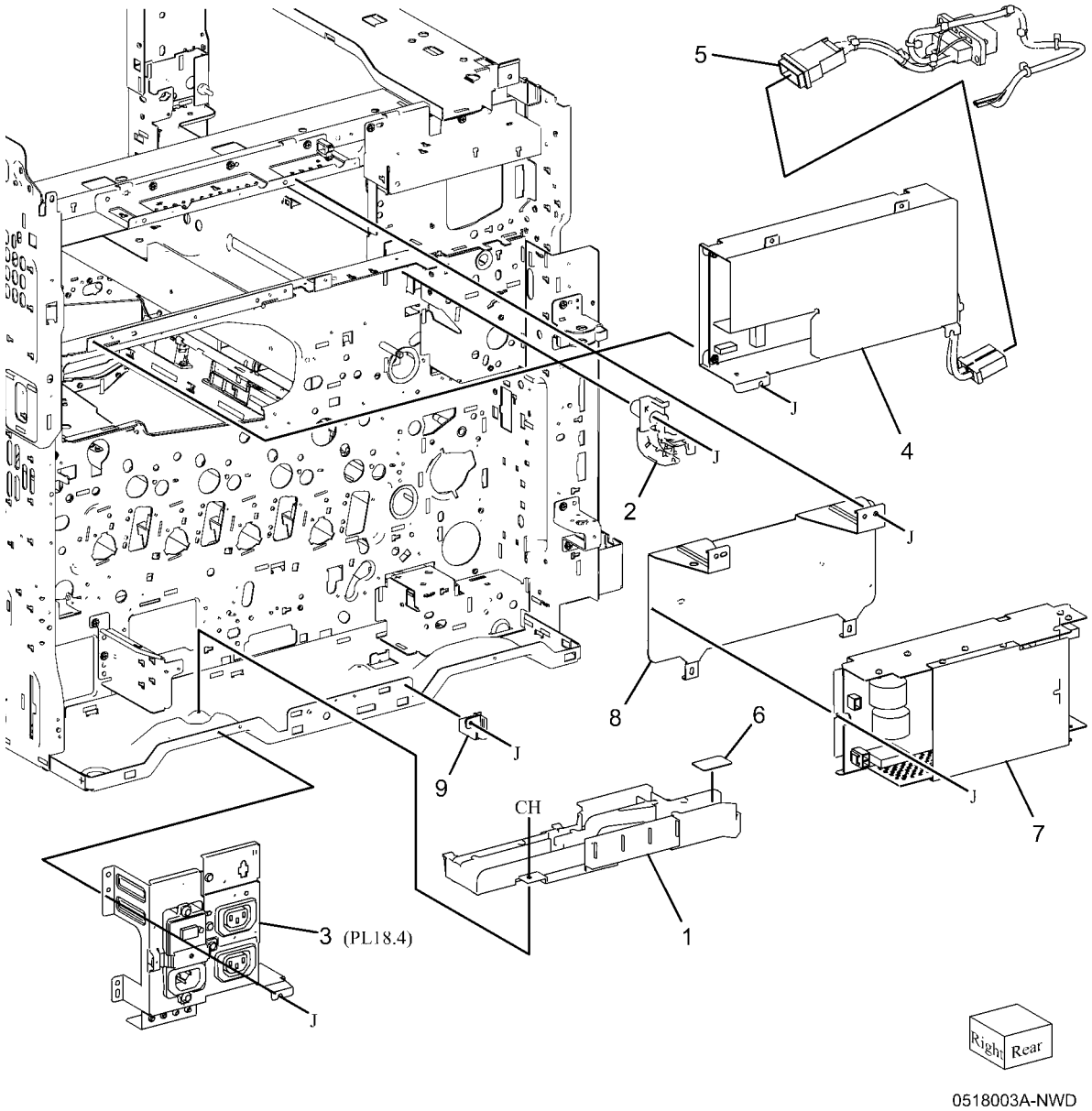

PL 18.4 GFI Chassis

Item	Part	Description
1	908W01201	GFI
2	113E23720	Finisher Outlet
3	–	GFI Chassis (Not Spared)
4	962K87840	Wire Harness (XE) (7545, 7556)
–	962K87720	Wire Harness (7545, 7556)
–	962K87710	Wire Harness (XC) (7525, 7530, 7535)
–	962K87830	Wire Harness (XE) (7525, 7530, 7535)
5	–	Bracket (Not Spared)
6	–	Wire Harness (Not Spared)
7	–	Wire Harness (Not Spared)
8	–	Wire Harness (Not Spared)
9	113E23620	PSW Outlet/DFE Outlet

PL18.4

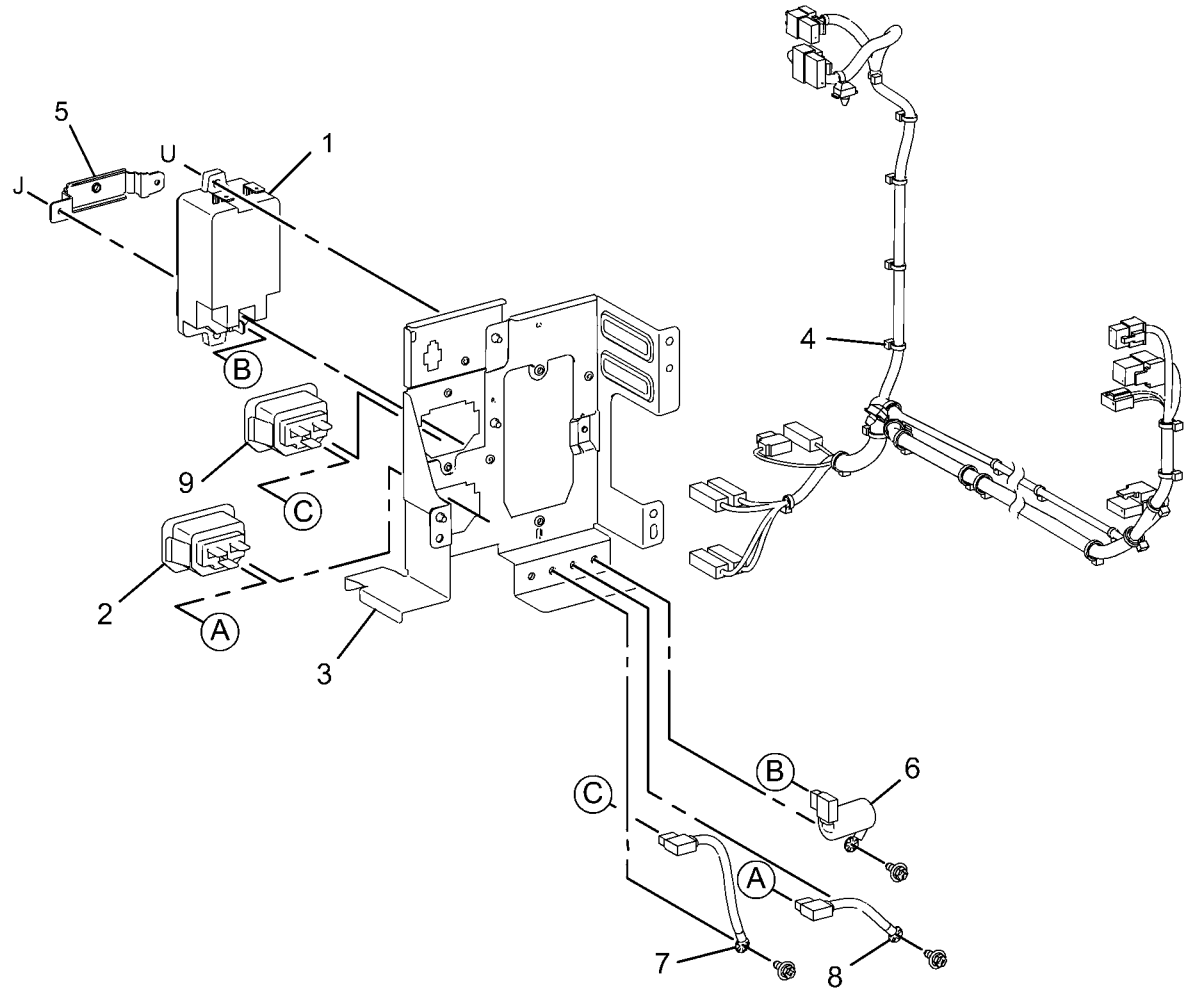

0518004A-NWD

PL 18.5 Front/Right

Item	Part	Description
1	101K60311	Main Power Switch And Harness
2	110E13090	Main Power Switch
3	–	Bracket (P/O PL 18.5 Item 1)
4	–	Wire Harness (P/O PL 18.5 Item 1)
5	110K15981	Power Switch
6	–	Harness Guide (Not Spared)
7	110E11980	Front Cover Interlock Switch
8	130K71470	MOB ADC Assembly (REP 9.16)
9	–	Bracket (Not Spared)
10	–	IBT Front Cover Switch (Not Spared)
11	105E19271	Main LVPS

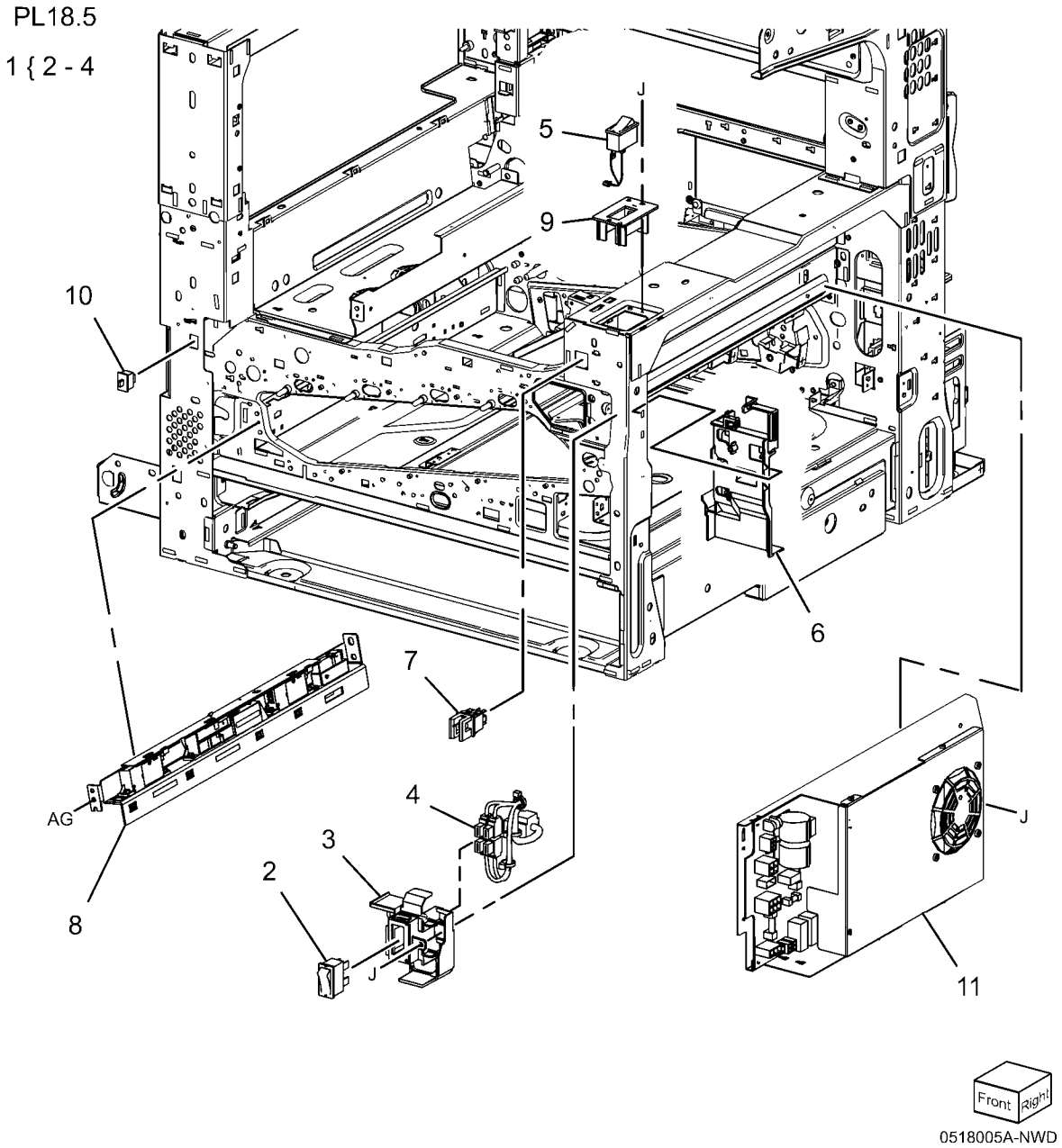

PL 18.6A Bottom (7525, 7530, 7535)

Item	Part	Description
1	848K13850	HVPS Housing
2	032E27481	HVPS Guide
3	105E17521	Developer/BCR HVPS (REP 1.7)

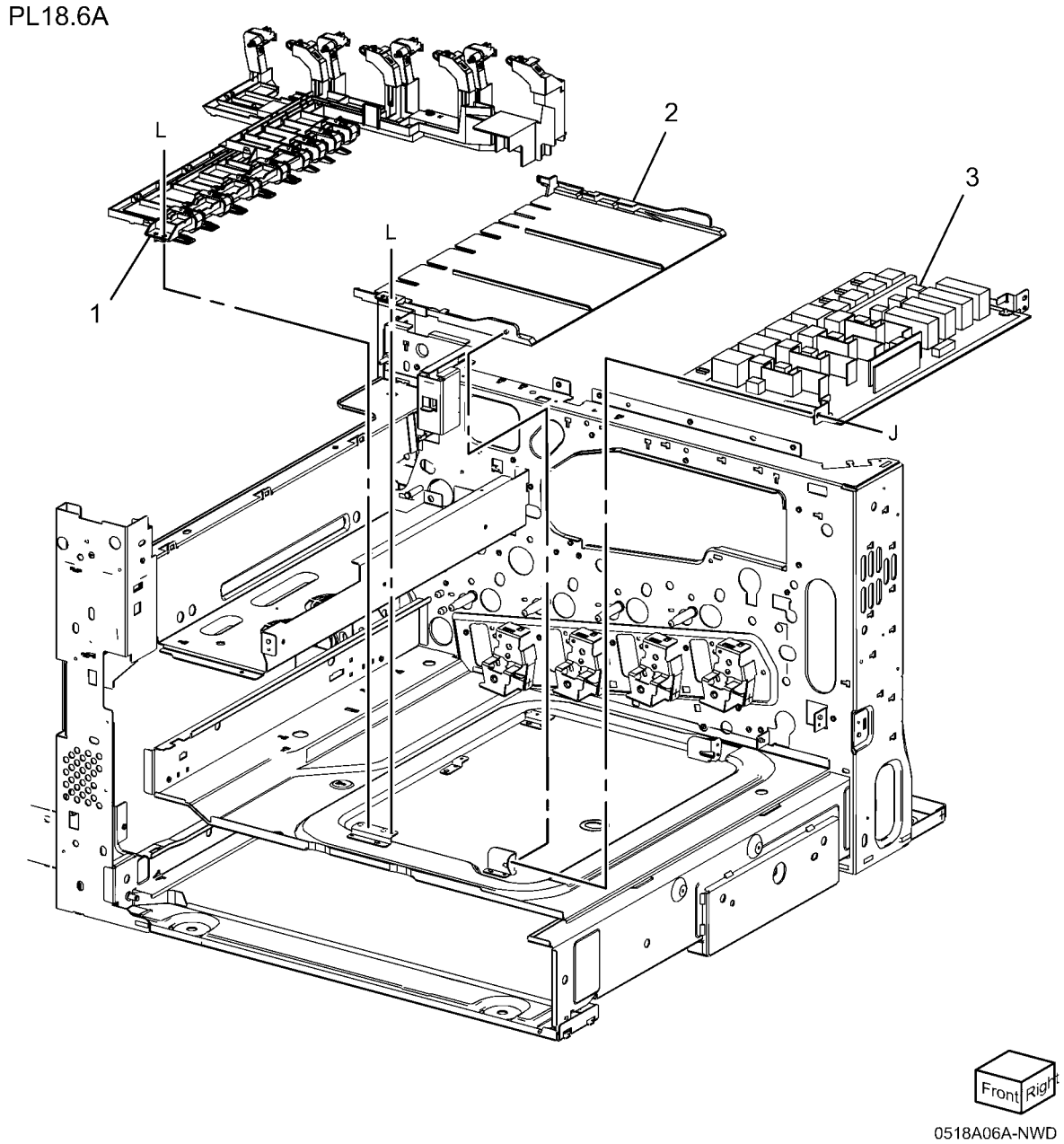

PL 18.6B Bottom (7545, 7556)

Item	Part	Description
1	–	HVPS Housing (P/O PL 18.6B Item 4)
2	–	HVPS Housing (P/O PL 18.6B Item 4)
3	105E19352	HVPS (BCR) (REP 1.7)
4	848K36390	HVPS Housing

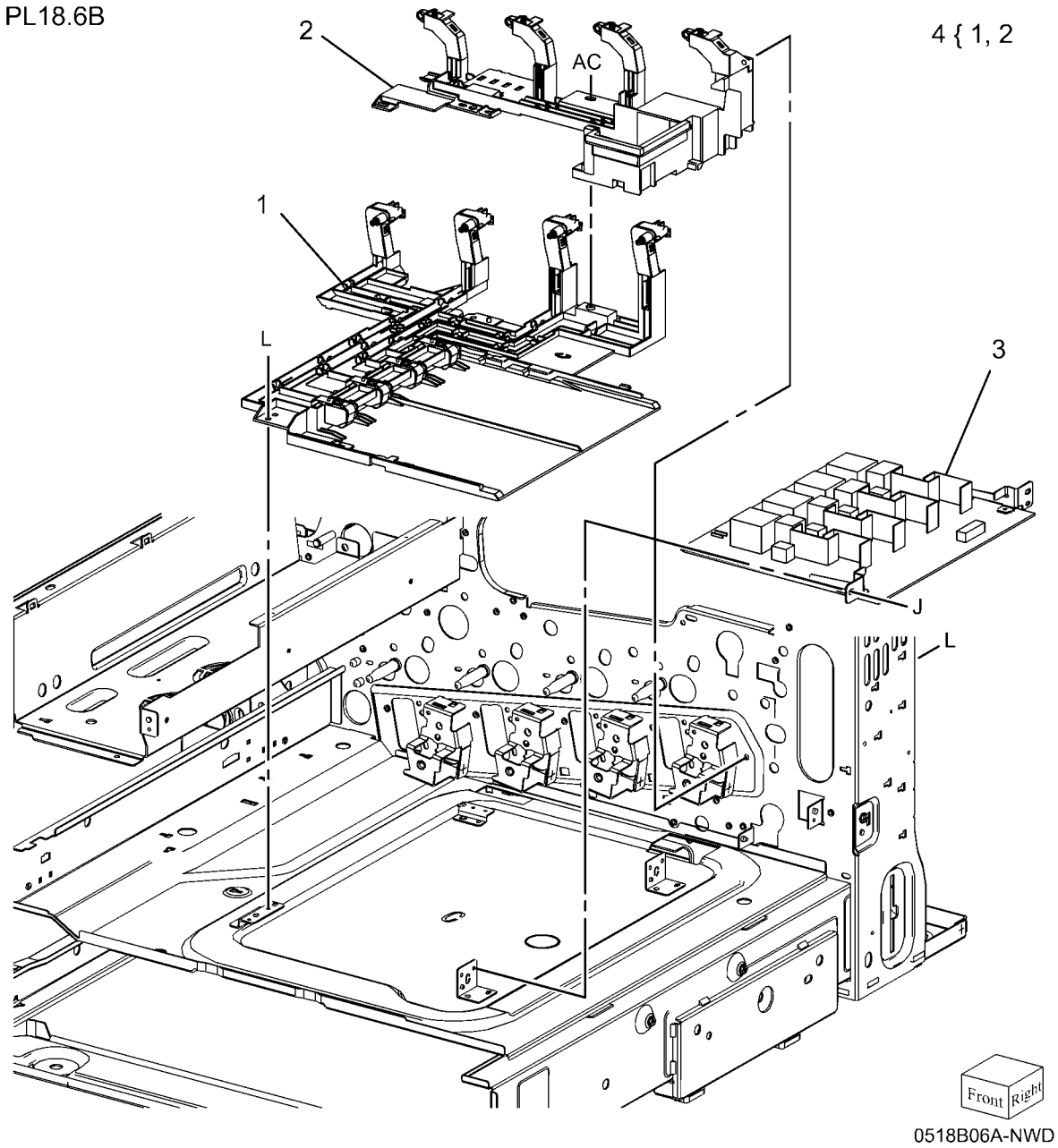

PL 18.7 Wire Harness

Item	Part	Description
1	962K78402	Left Wire Harness (7525, 7530, 7535)
–	962K78452	Left Wire Harness (7545, 7556)
2	962K78463	Right Wire Harness (7545, 7556)
–	962K78413	Right Wire Harness (7525, 7530, 7535)
3	962K78510	Right Wire Harness (7525, 7530, 7535)
4	962K78420	Front Wire Harness (7525, 7530, 7535)
–	962K78470	Front Wire Harness (7545, 7556)

PL18.7

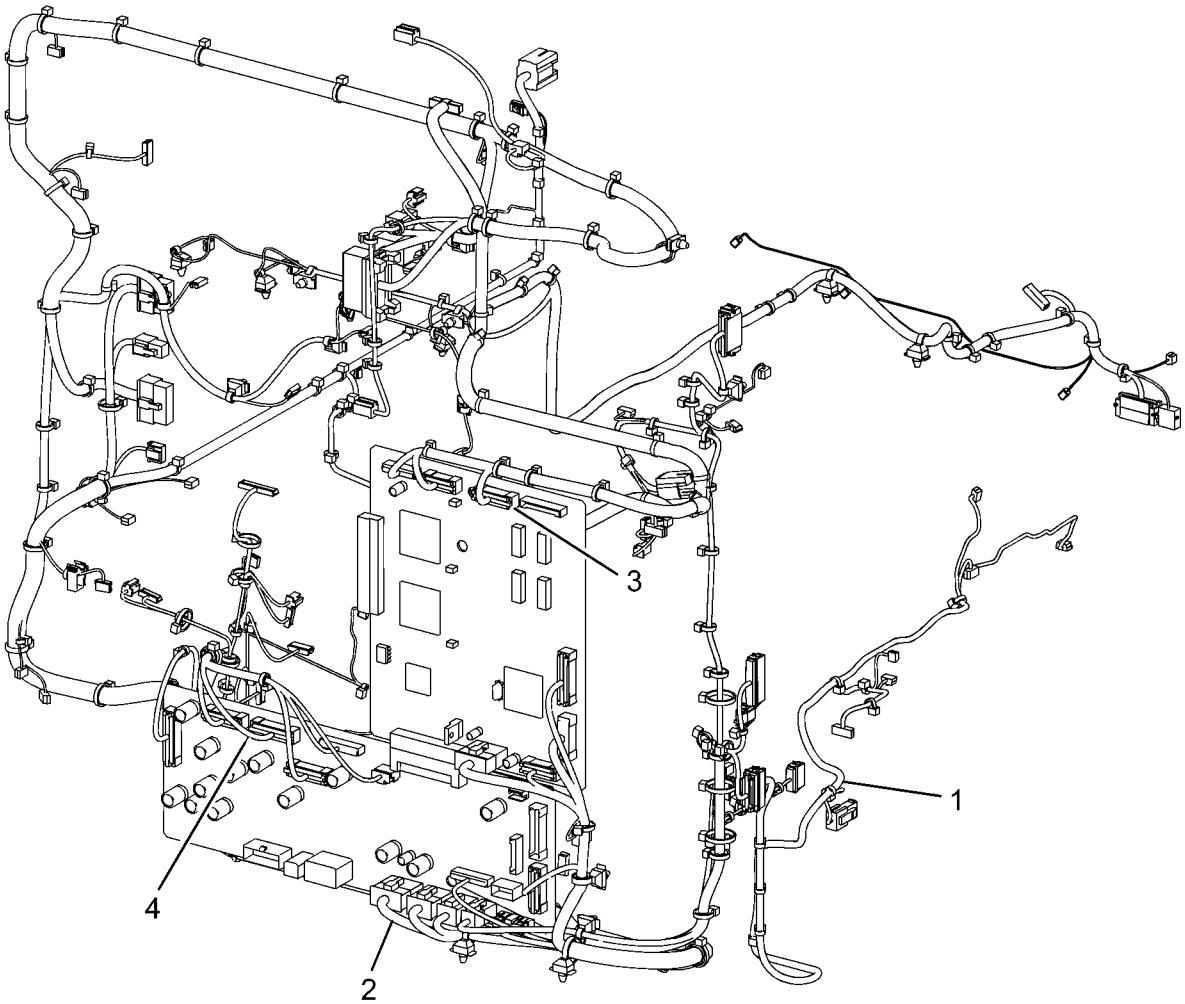

0518007A-NWD

PL 19.1 Covers (1 of 3)

Item	Part	Description
1	815E58600	Plate (Y)
2	815E58610	Plate (M)
3	815E58620	Plate (C)
4	815E43300	Plate (K)
5	–	Magnet Catch (Not Spared)
6	848E14020	Strip (A)
7	848K44761	Front Cover Assembly
8	–	Front Cover (P/O PL 19.1 Item 7)
9	–	Strip (B) (P/O PL 19.1 Item 7)
10	848K42190	Inner Cover Assembly
11	032K05330	Guide
12	014E63022	Block
13	–	Tapping Screw (Not Spared)

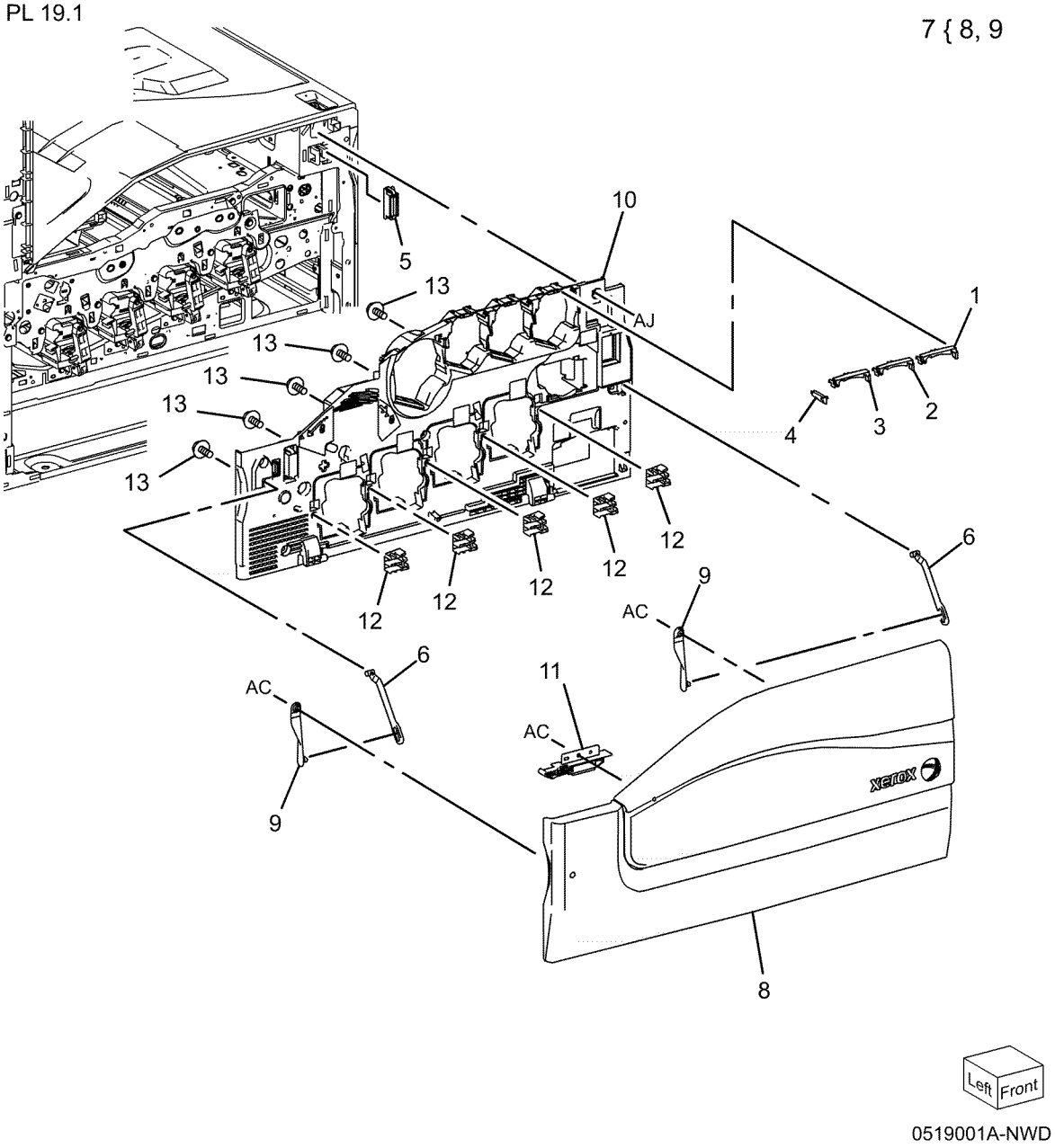

PL 19.2 Covers (2 of 3)

Item	Part	Description
1	050E25450	Add Tray (7545, 7556)
–	050E25690	Add Tray (7525, 7530, 7535)
2	050E25661	Exit 2 Tray
3	–	Top Cover (Not Spared)
4	848E44981	MSI Front Cover
5	–	Left Rear Upper Cover (Not Spared)
6	–	Number Label (5) (Not Spared)
7	–	Left Rear Lower Cover
8	–	Left Upper Cover (Not Spared)
9	–	Exit Front Cover (Not Spared)
10	–	Exit Upper Cover (Not Spared)
11	–	Top Rear Cover (Not Spared)
12	848E45051	Front Left Cover

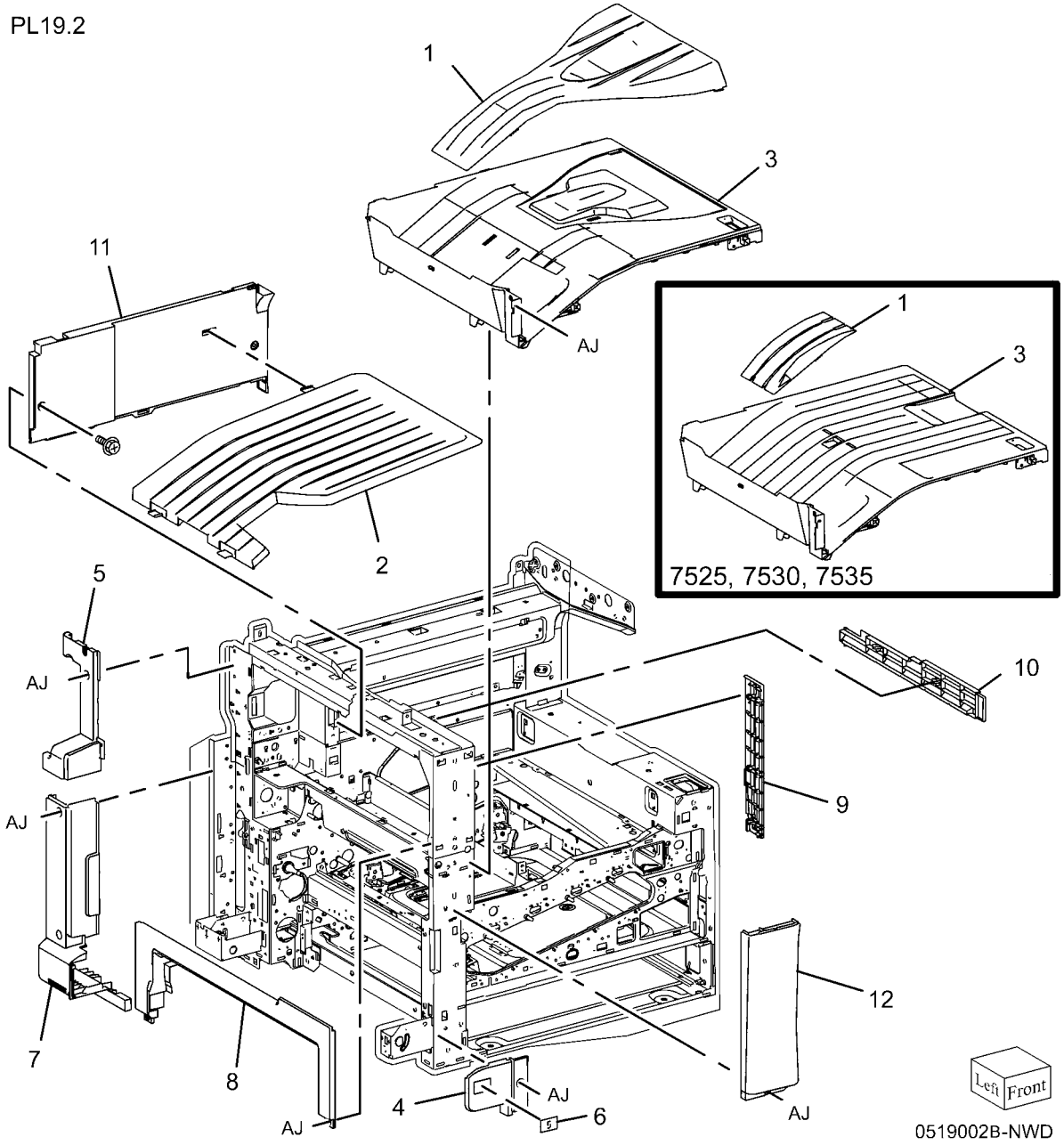

PL 19.3 Covers (3 of 3)

Item	Part	Description
1	–	Right Cover (Not Spared)
2	–	Right Rear Cover (Not Spared)
3	–	Rear Lower Cover (Not Spared)
4	–	Rear Upper Cover (Not Spared)
5	–	DFE Outlet Cover (Not Spared)
6	–	Filter Cover (Not Spared)
7	–	MCU Cover (Not Spared)
8	–	Data Plate (Not Spared)
9	–	Ground Label (Not Spared)
10	–	Label (Outlet) (Not Spared)
11	–	GFI Label (Not Spared)
12	–	Rear Control Unit Cover (Not Spared)
13	–	Control Unit Connector Cover (Not Spared)
14	–	DFE Cover (Not Spared)

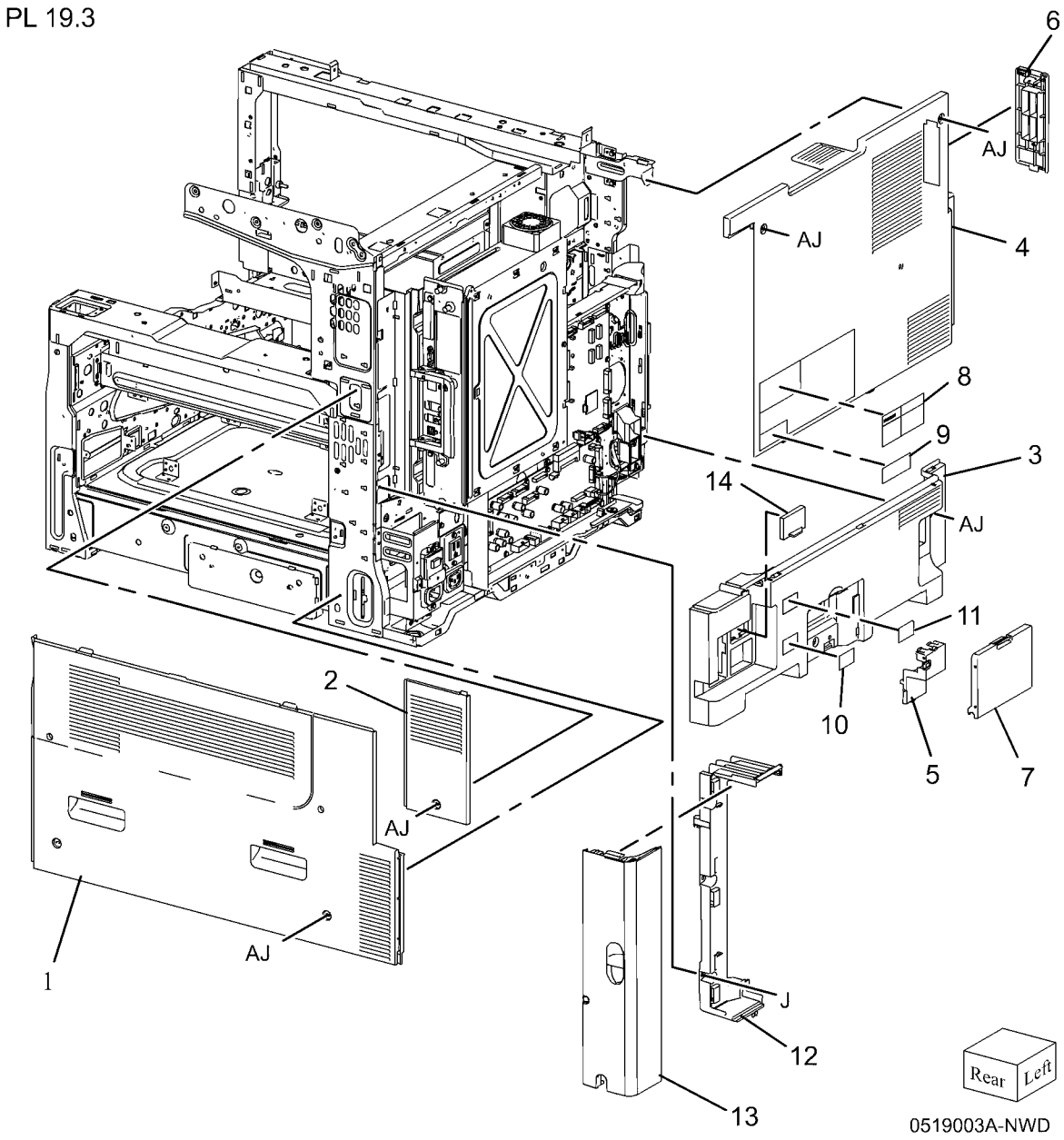

PL 21.1 Professional Finisher

Item	Part	Description
1	–	A/P Finisher (Not Spared) (REP 21.11)
2	–	H-Transport Assembly (Not Spared) (REP 21.12)
3	–	Booklet Maker (Not Spared) (REP 21.16)
4	–	Booklet Tray (Not Spared)
5	–	Decurler Transport Assembly (Not Spared)
6	–	Finisher Plate (Not Spared)

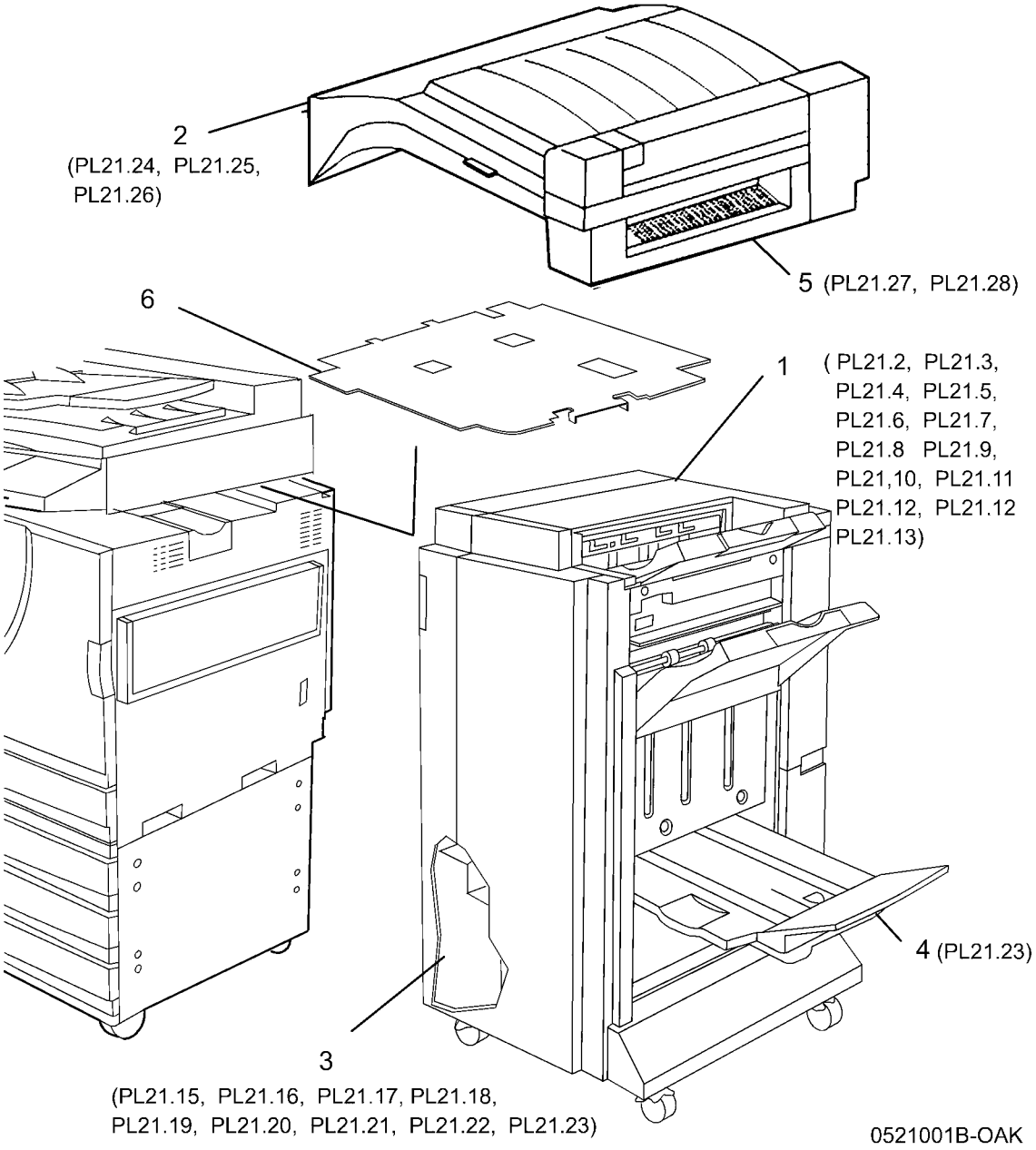

PL 21.2 Finisher Cover (1 of 2)

Item	Part	Description
1	802E78090	Top Cover (REP 21.4)
2	038E31290	Tray Spring Guide (Not Spared) (REP 21.8)
3	050K51270	Top Tray (REP 21.6)
4	–	Eject Cover (Not Spared) (REP 21.7)
5	050K51280	Stacker Tray (REP 21.19)
6	–	Bottom Cover (Not Spared)
7	017E98040	Caster
8	017E97230	Caster
9	–	Rear Lower Cover (Not Spared) (REP 21.3)
10	–	H-Transport Connector Cover (Not Spared)
11	–	Rear Upper Cover (Not Spared) (REP 21.2)
12	–	Nut M12X1.25 (Not Spared)

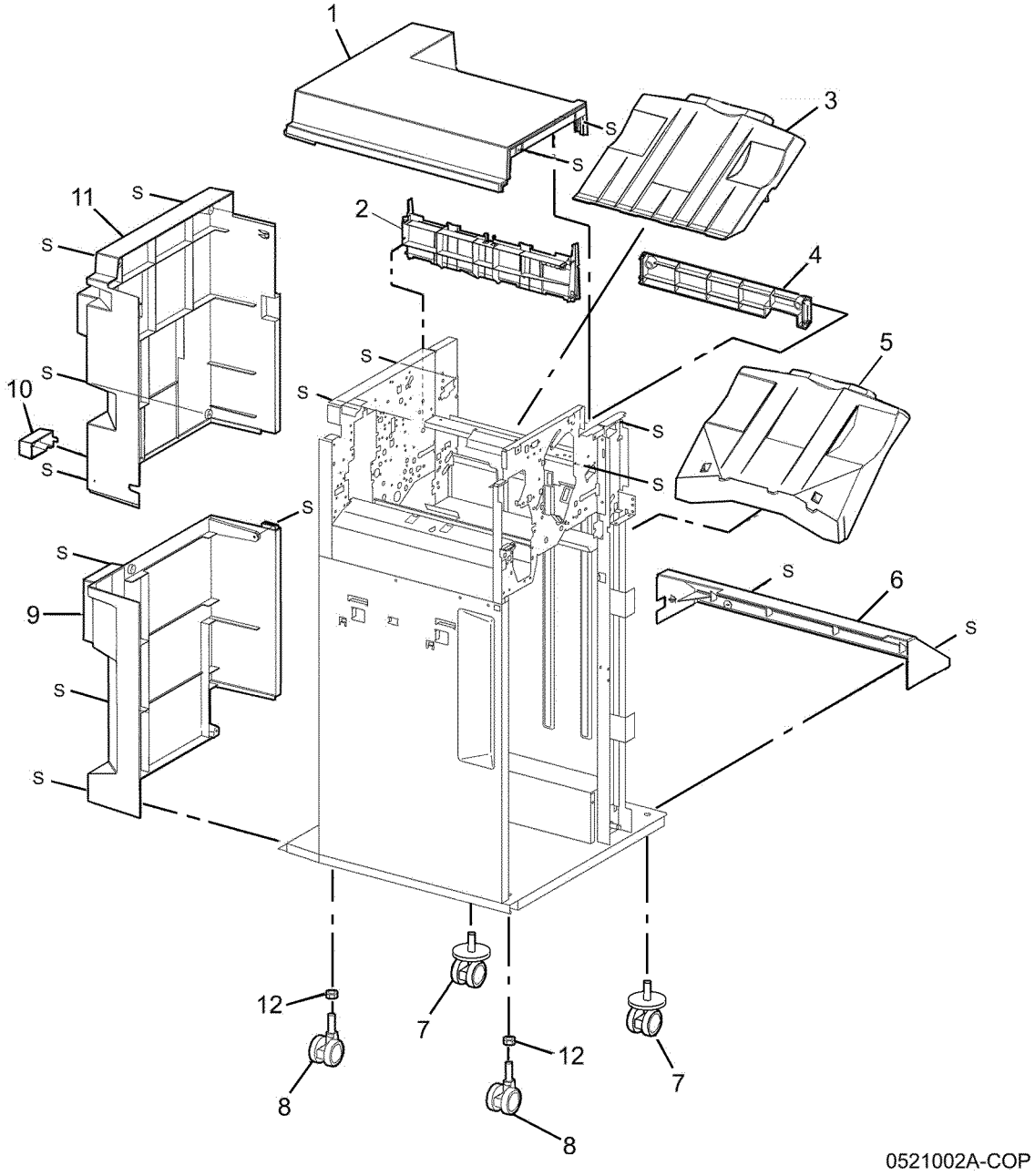

PL 21.3 Finisher Cover (2 of 2)

Item	Part	Description
1	–	Front Top Cover (Not Spared) (REP 21.5)
2	110E97990	Front Door Interlock Switch
3	–	Front Door (P/O PL 21.3 Item 11)
4	–	Hinge Bracket (P/O PL 21.3 Item 11)
5	–	Front Right Cover (P/O PL 21.3 Item 11)
6	815E09100	Docking Plate
7	–	Spring (Not Spared)
8	848E18470	Front Gap Cover
9	–	Left Top Cover (Not Spared) (REP 21.10)
10	015K78080	Bottom Plate
11	848K37492	Front Door Assembly (REP 21.1)
12	–	Shield Assembly
13	015K78071	IOT Docking Plate

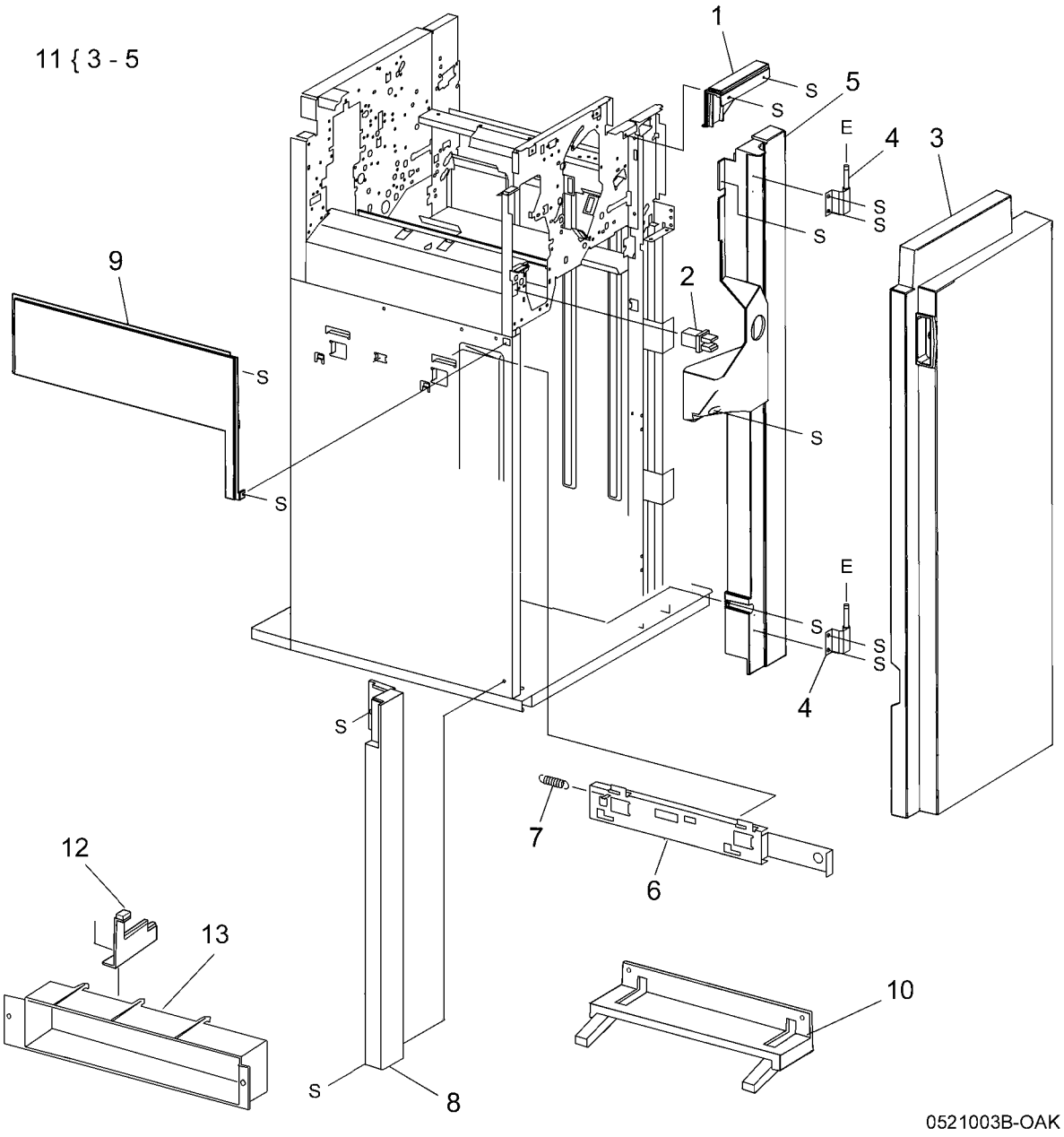

PL 21.4 Finisher Stack

Item	Part	Description
1	–	Stacker Tray Bracket (Not Spared)
2	041K94721	Left Carriage Assembly
3	–	Stacker Drive Belt (P/O PL 21.4 Item 2) (REP 21.21)
4	–	Left Carriage Bracket (P/O PL 21.4 Item 2)
5	–	Belt Clamp (P/O PL 21.4 Item 2)
6	809E56850	Spring
7	013E27150	Carriage Bearing
8	041K94970	Right Carriage Assembly
9	–	Stacker Drive Belt (P/O PL 21.4 Item 8) (REP 21.21)
10	–	Belt Clamp (P/O PL 21.4 Item 8)
11	–	Right Carriage Bracket (P/O PL 21.4 Item 8)
12	–	Stacker Sensor Actuator (P/O PL 21.4 Item 8)
13	802K67140	Stack Height Sensor (Front, Rear)
14	–	Elevator Drive Shaft (Not Spared)
15	413W11860	Bearing
16	020E37720	Pulley (18T)
17	130K88770	Stacker Encoder Sensor, Stacker No Paper Sensor (No Paper)
18	020E37710	Clutch Pulley
19	807E04730	Clutch Gear
20	809E56860	Spring
21	–	Washer
22	–	Sensor Bracket (Not Spared)
23	146E01770	Stacker Encoder
24	015K69730	Elevator Motor Assembly
25	–	Elevator Motor Drive Belt (P/O PL 21.4 Item 24)
26	–	Elevator Motor (P/O PL 21.4 Item 24)
27	–	Upper Limit Sensor (Limit)
28	–	Bracket (P/O PL 21.4 Item 24)
29	962K61050	Stack Height Front Harness Assembly

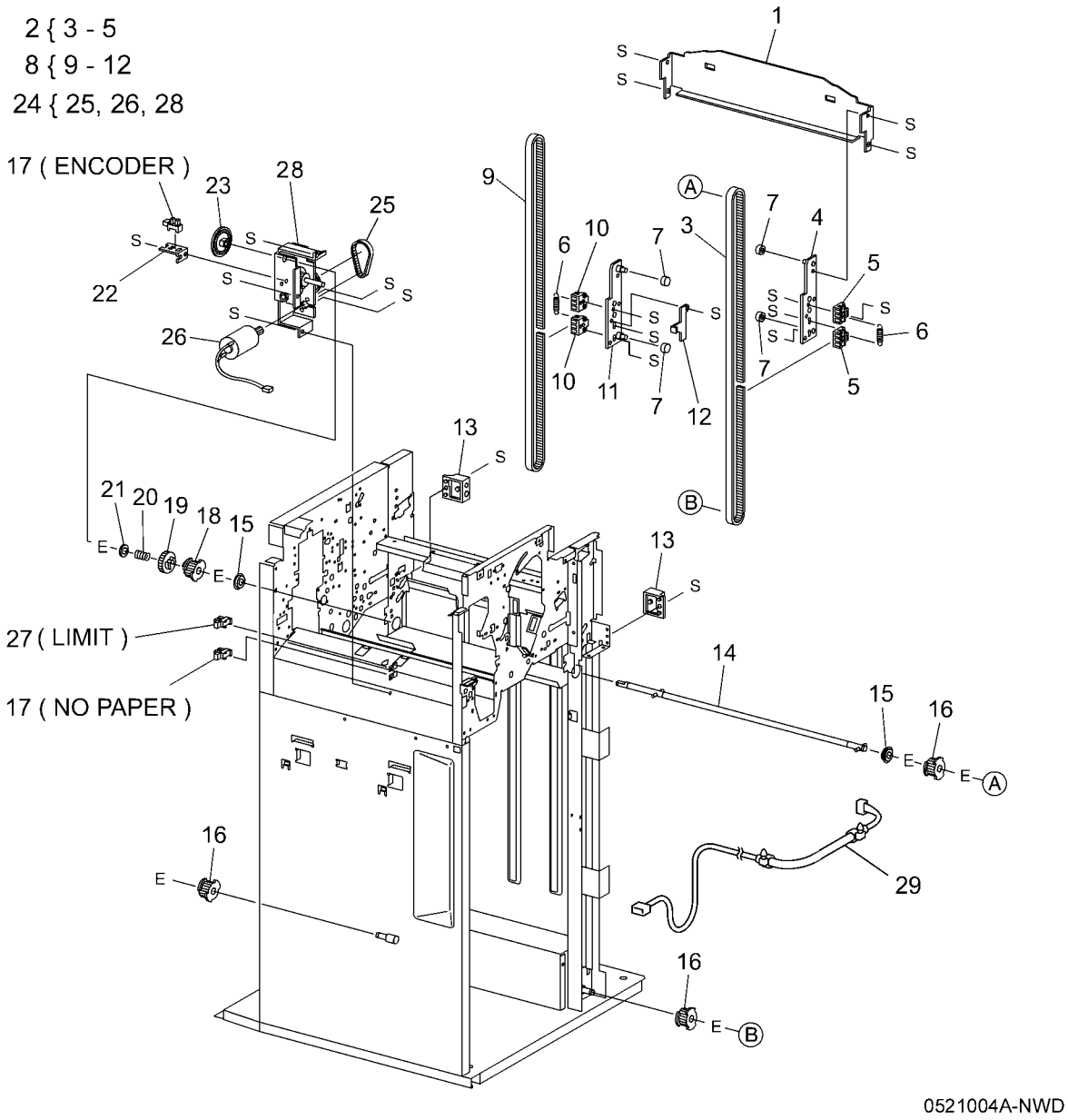

PL 21.5 Finisher Punch

Item	Part	Description
1	801K36440	2/3 Hole Punch Assembly
–	801K30940	2/4 Hole Punch Assembly (REP 21.13)
2	–	Puncher Unit Harness (P/O PL 21.5 Item 9)
3	–	Puncher Motor Cover (P/O PL 21.5 Item 1)
4	015K65880	Puncher Move Motor
5	–	Frame Assembly Holder (P/O PL 21.5 Item 1)
6	–	Sensor Registration Bracket Assembly (P/O PL 21.5 Item 1)
7	–	Front Punch Cover (P/O PL 21.5 Item 1)
8	–	Side Registration Sensor 1 (Reg 1) and 2 (Reg 2) (P/O PL 21.5 Item 1)
9	–	2/3 Hole Punch Bracket Assembly
10	–	Left Punch Cover (P/O PL 21.5 Item 9)
11	–	Guide Assembly (P/O PL 21.5 Item 9)
12	127K40260	Punch Motor Assembly
13	–	Punch Motor Sensor (P/O PL 21.5 Item 9)
14	–	Punch Motor Bracket Assembly
15	–	Front Punch Sensor (Front), Home Punch Sensor (Home), Hole Select Punch Sensor (Hole) (P/O PL 21.5 Item 9)
16	–	Sensor Bracket (P/O PL 21.5 Item 9)
17	–	Punch Move Home Sensor (P/O PL 21.5 Item 18)
18	–	Punch Move Home Sensor Assembly
19	060E91300	Puncher Waste Bin
20	130K88770	Puncher Box Set Sensor
21	–	Bracket (P/O PL 21.5 Item 1)
22	–	Bracket (P/O PL 21.5 Item 18)
23	–	Motor Bracket (P/O PL 21.5 Item 14)
24	–	Bracket (Not Spared)

1{2 - 8
6{8, 21
9{2, 6 - 16
14{12, 13, 23
18{17, 22

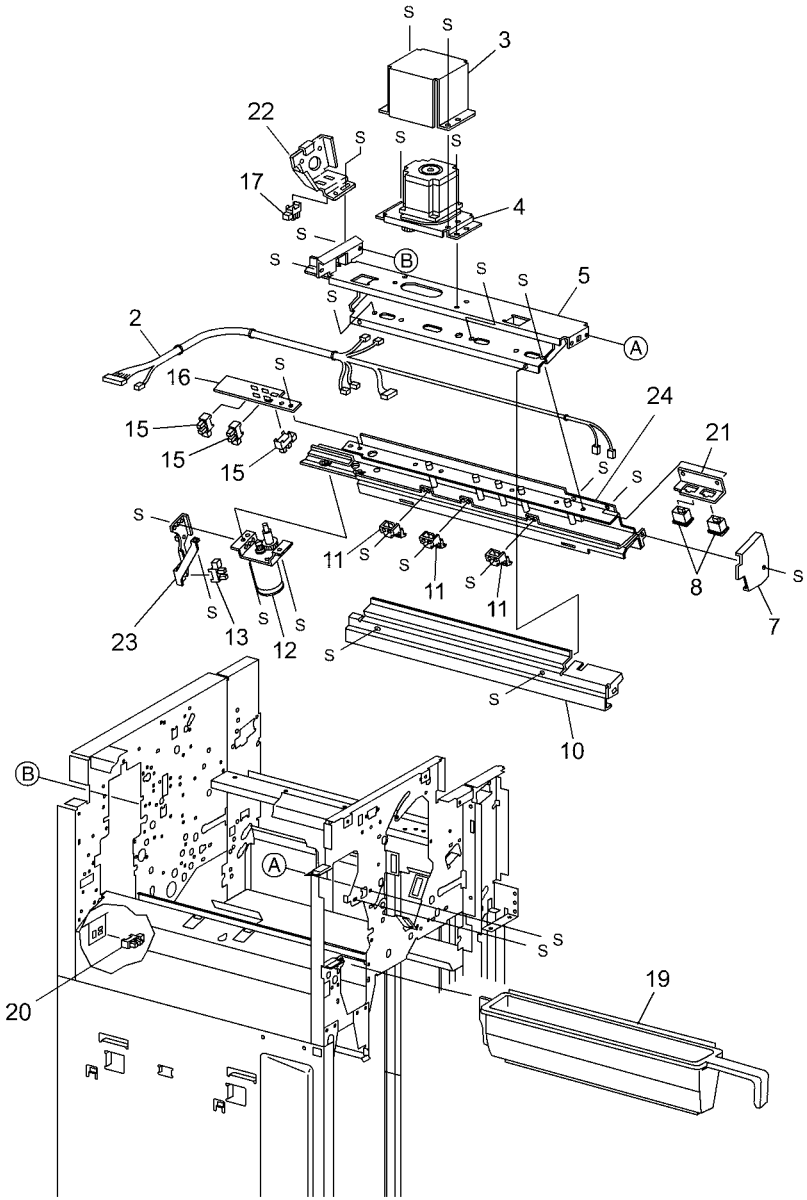

0521005A-OAK

PL 21.6 Finisher Stapler

Item	Part	Description
1	050K51250	Staple Cartridge
2	029K92350	Stapler Assembly (REP 21.14)
3	–	Stapler Cover (Not Spared)
4	–	Stapler Holder (Not Spared)
5	130K88770	Stapler Move Position Sensor
6	–	Stapler Harness Guide (Not Spared)
7	962K59060	Staple Harness
8	–	Upper Stapler Carriage (Not Spared)
9	041K94970	Stapler Move Motor
10	001E66640	Stapler Rail (REP 21.15)
11	–	Stapler Frame (Not Spared)

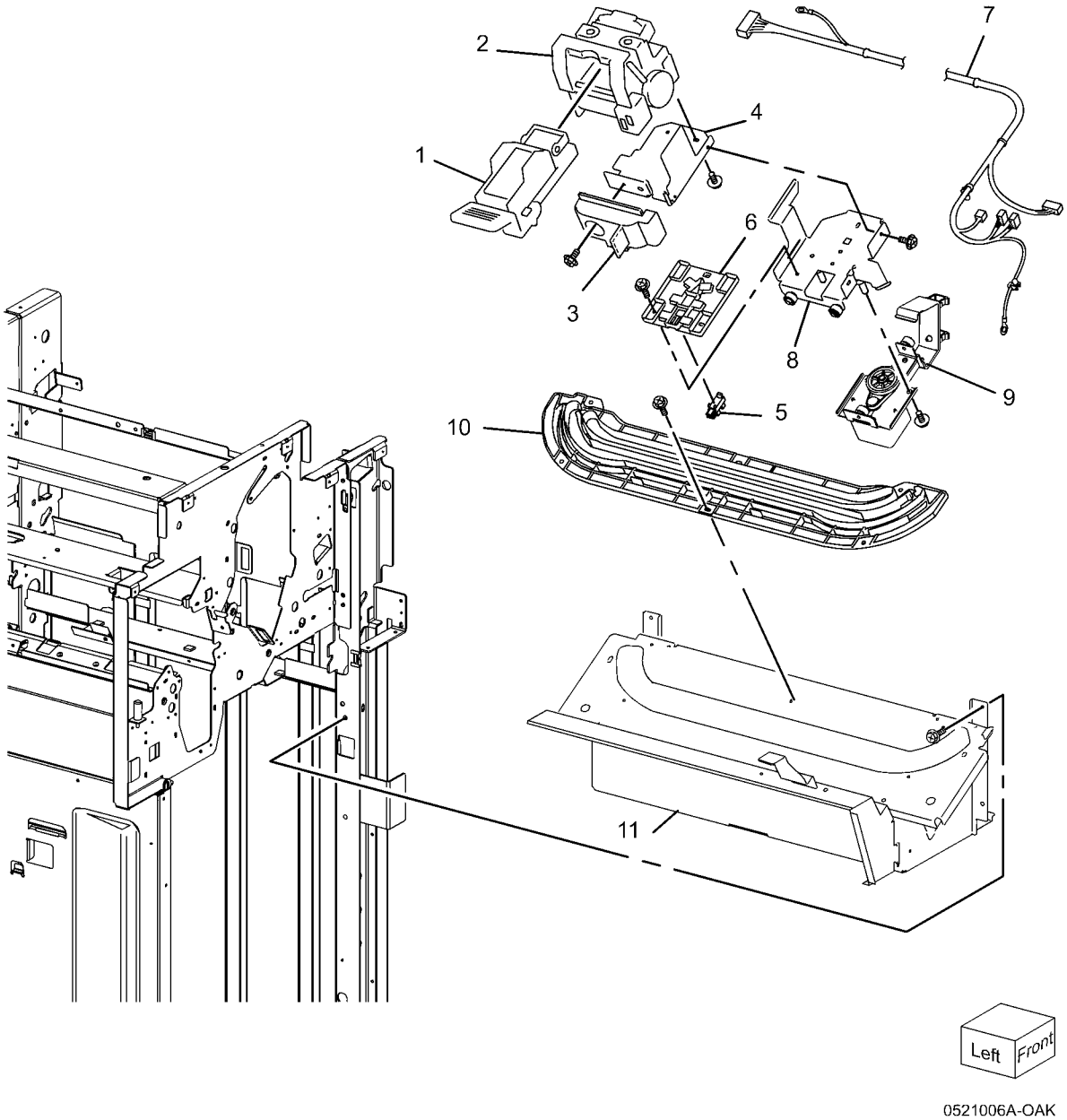

PL 21.7 Finisher Eject (1 of 3)

Item	Part	Description
1	–	Eject Chute Assembly
2	121E92720	Magnet
3	–	Sub Paddle Solenoid
4	–	Solenoid Bracket (P/O PL 21.7 Item 29)
5	809E56870	Pinch Spring
6	–	Cyclone Paddle (P/O PL 21.7 Item 29)
7	121K35710	Sub Paddle Solenoid Assembly
8	–	Solenoid Spring
9	006K23861	Paddle Shaft
10	–	Eject Clamp Motor Assembly
11	127K52690	Eject Clamp Motor
12	–	Eject Clamp Bracket (P/O PL 21.7 Item 10)
13	130K70160	Eject Clamp Home Sensor
14	011K97710	Eject Cam Follower
15	413W11860	Bushing
16	807E10800	Gear (23T)
17	–	Bushing
18	807E20810	Cam Gear (70T)
19	807E08990	Gear (23T)
20	807E20800	Gear (68T/20T)
21	–	Wire Clip (Not Spared)
22	–	Switch Bracket (Not Spared)
23	–	Eject Cover Switch
24	–	Entrance Knob (Not Spared)
25	–	Wire Clamp (Not Spared)
26	–	Wire Clip (Not Spared)
27	–	Eject Pinch Shaft (P/O PL 21.7 Item 7, PL 21.7 Item 29)
28	–	Eject Chute (P/O PL 21.7 Item 1)
29	–	Eject Chute Unit Assembly (REP 21.28)
30	423W29454	Belt
31	–	Motor Bracket (P/O PL 21.7 Item 10)

1 { 2, 28
7 { 3 - 6, 27
10 { 11, 31
29 { 1 - 4, 6, 7, 27

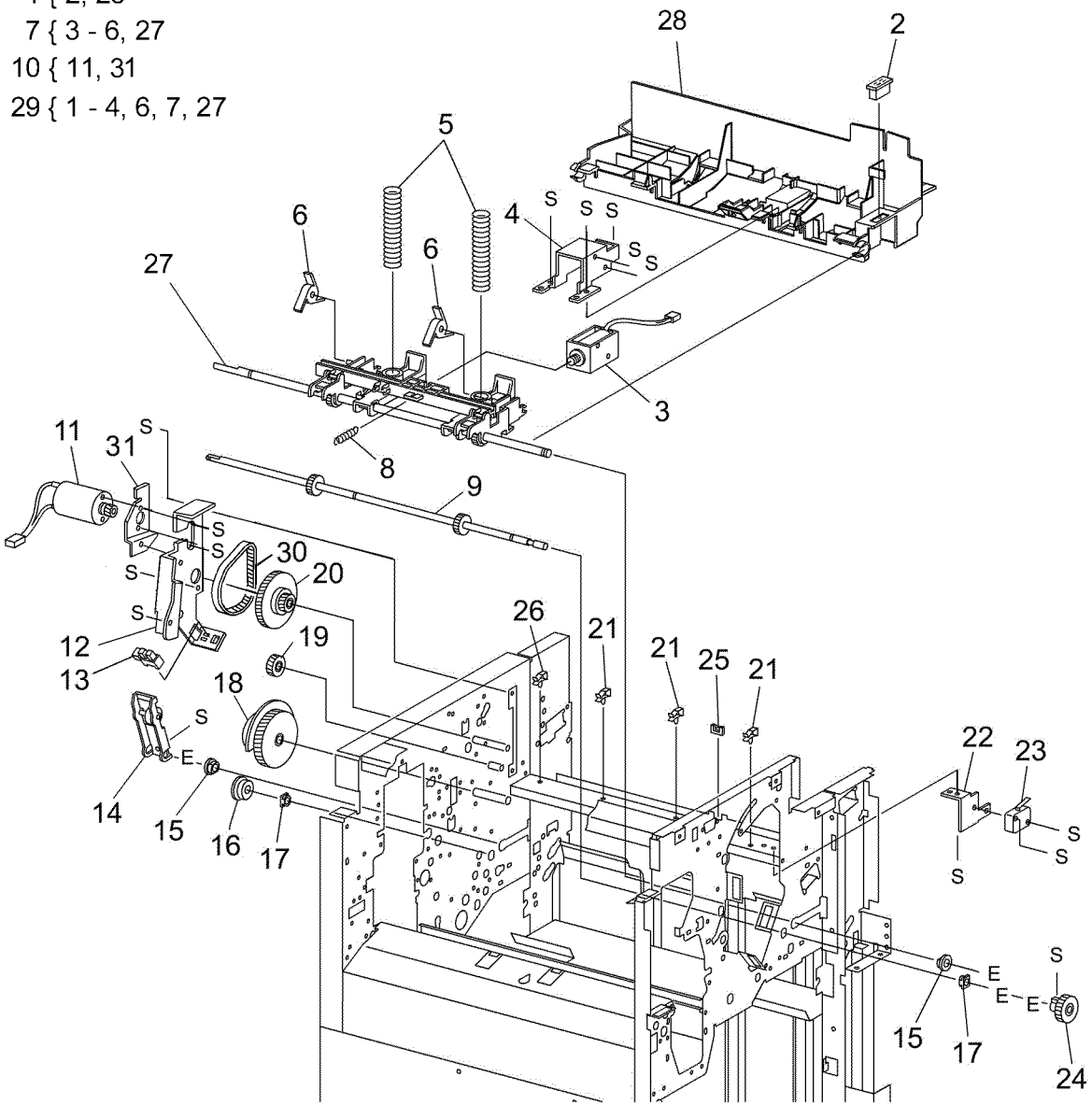

PL 21.8 Finisher Eject (2 of 3)

Item	Part	Description
1	050K65131	Compiler Tray Assembly (REP 21.18)
2	130K88770	Tamper Home Sensor (Front, Rear)
3	130K70160	Compiler Tray No Paper Sensor, Set Clamp Home Sensor
4	120E24290	Sensor Actuator
5	–	Torsion Spring (P/O PL 21.8 Item 20)
6	–	Front Tamper Motor (Not Spared)
7	–	Rear Tamper Motor (Not Spared)
8	962K59070	Compiler Harness
9	006K86372	Eject Roll Shaft Assembly
10	033E93751	Set Paddle Clamp
11	–	Paddle Guide (Not Spared)
12	–	Bushing (Not Spared)
13	–	Bushing (Not Spared)
14	807E04760	Gear (39T)
15	121K34631	Set Clamp Clutch (34T)
16	120E29570	Set Clamp Actuator
17	049K02710	Eject Motor Bracket Assembly
18	–	Motor (P/O PL 21.8 Item 17)
19	–	Inner Cover (Not Spared) (REP 21.9)
20	–	Actuator Kit

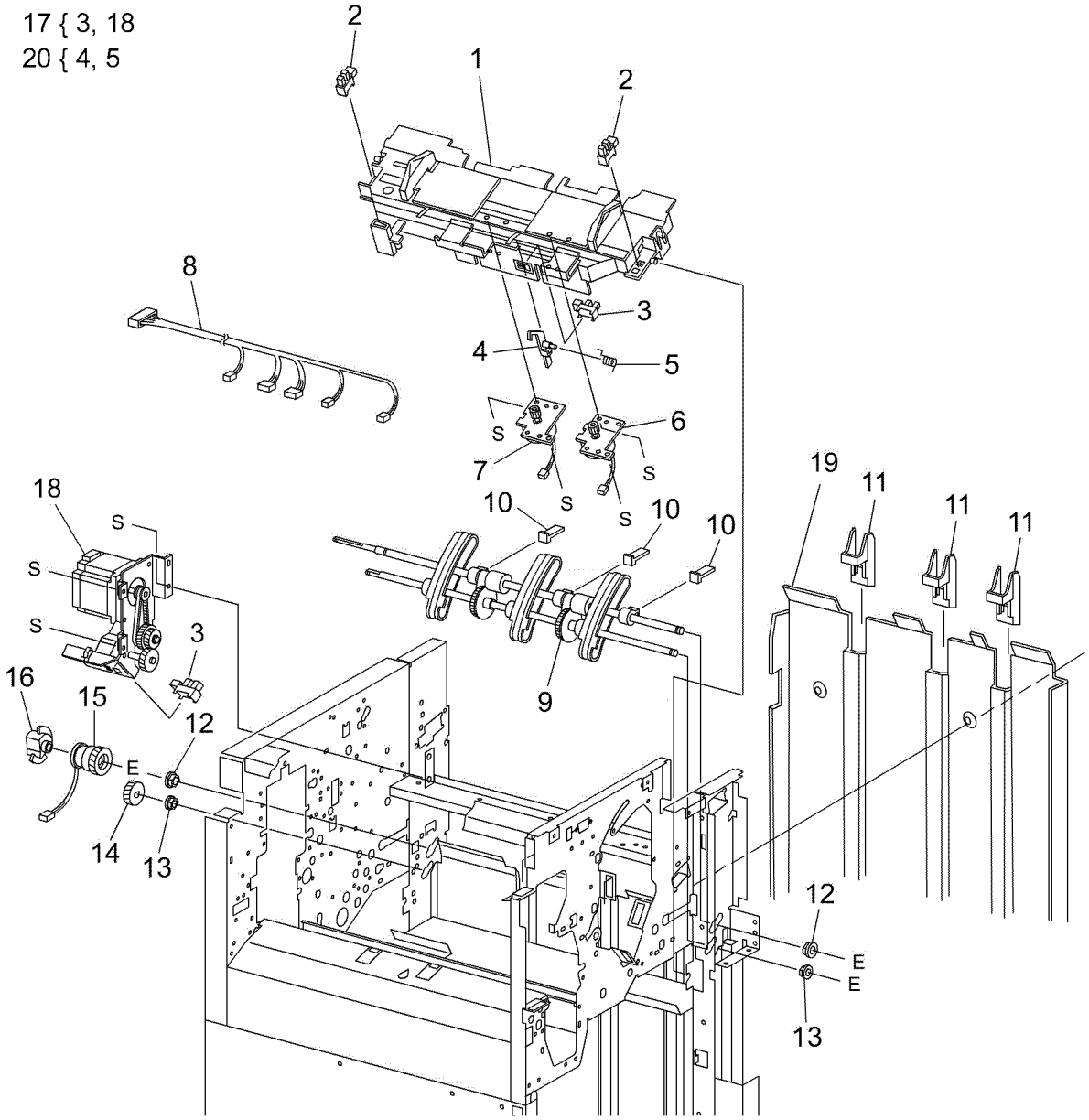

PL 21.9 Finisher Eject (3 of 3)

Item	Part	Description
1	–	Sensor Bracket Assembly (Not Spared)
2	–	Compiler Sensor Harness (P/O PL 21.9 Item 1)
3	130K88190	Compiler Exit Sensor
4	105E13100	Static Eliminator
5	–	Upper Exit Chute (Not Spared)
6	–	Lower Exit Roll (Not Spared)
7	–	Lower Exit Roll Chute Assembly
8	–	Lower Exit Roll Chute (P/O PL 21.9 Item 7)
9	–	Bushing (P/O PL 21.9 Item 7)
10	022K67870	Exit Pinch Roller 1
11	022K67880	Exit Pinch Roller 2
12	006K87430	Paddle Shaft (REP 21.20)
13	–	Synchronous Belt (55T)
14	–	Pulley (17T) (Not Spared)
15	–	Paddle Drive Shaft (Not Spared)
16	–	Pulley (Not Spared)
17	–	Bearing (Not Spared)
18	020E37690	Pulley (20T)
19	807E10820	Gear (23T)
20	020E37660	Pulley (20T)
21	020E37670	Pulley (44T/20T)
22	807E04780	Gear (23T)

7 { 8 - 13

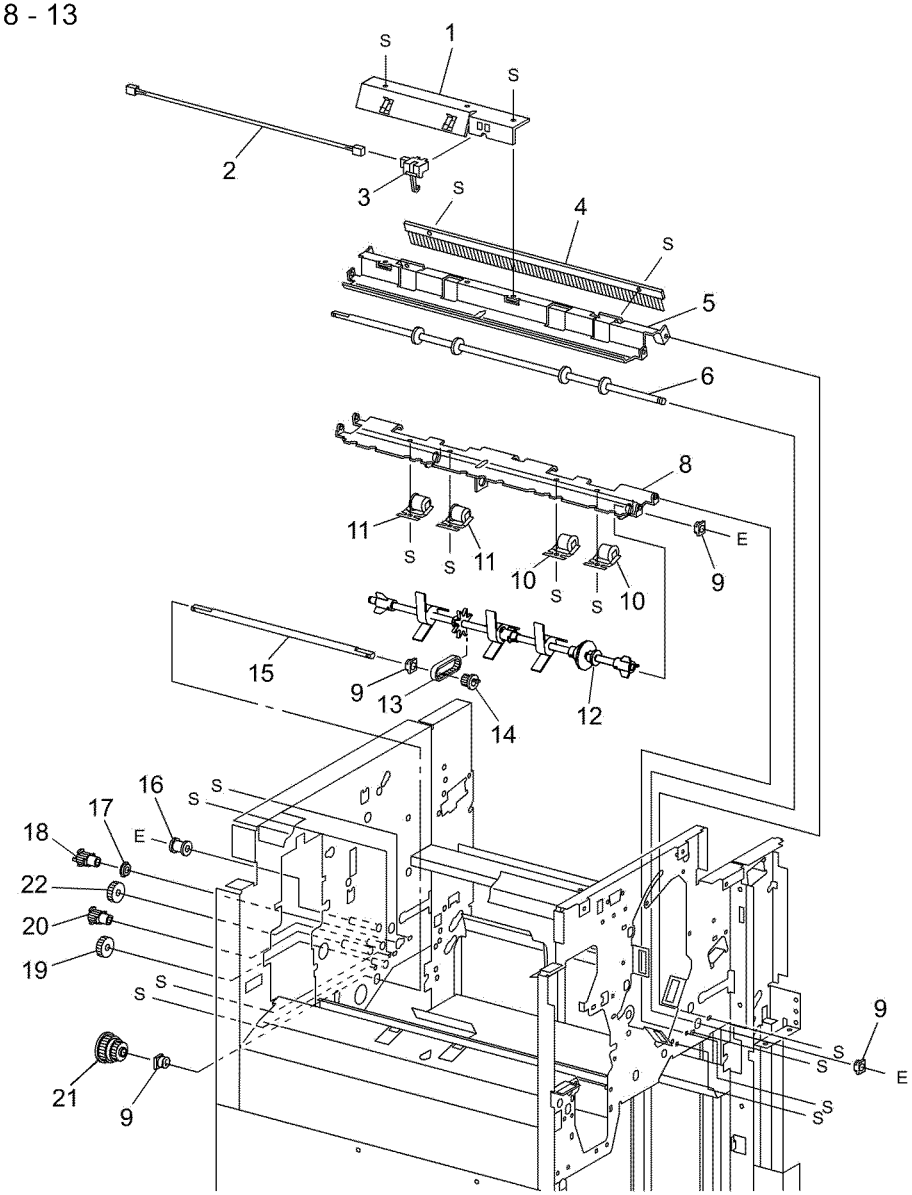

0521009B-OAK

PL 21.10 Finisher Transport (1 of 2)

Item	Part	Description
1	–	Lower Exit Chute Assembly (Not Spared)
2	–	Pinch Roller (P/O PL 21.10 Item 1)
3	–	Spring (P/O PL 21.10 Item 1)
4	–	Shaft (P/O PL 21.10 Item 1)
5	–	Torsion Spring (P/O PL 21.10 Item 1)
6	809E56910	Transport Gate
7	050K65450	Buffer Gate Assembly
8	121E92720	Magnet
9	–	Bushing
10	–	Top Buffer Chute Assembly (Not Spared)
11	–	Sensor Bracket (Not Spared)
12	130K88190	Buffer Path Sensor (REP 21.22)
13	022K67891	Buffer Roll (REP 21.25)
14	054K27160	Bottom Buffer Chute Assembly (REP 21.26)
15	–	Exit Pinch roller (P/O PL 21.10 Item 14)
16	054K38821	Upper Entrance Chute Assembly (XE)
–	054K38820	Upper Entrance Chute Assembly (XC)
17	–	Entrance Pinch Roller
18	–	Sensor Bracket (P/O PL 21.10 Item 14, PL 21.10 Item 16)
19	130E87370	Transport Entrance Sensor
20	022K67811	Entrance Roll
21	127K40282	Finisher Transport Motor
22	–	Motor Bracket (Not Spared)
23	423W87054	Finisher Transport Motor Belt
24	020E43210	Pulley
25	–	Tension Spring (Not Spared)
26	–	Tension Bracket (Not Spared)
27	413W66250	Bearing
28	–	Gear (46T)
29	020E37660	Pulley (20T)
30	012E11991	Buffer Link
31	–	Gear (23T)
32	068K55250	Transport Gate Solenoid
33	012E11980	Transport Link
34	015K65821	Booklet Gate Solenoid
35	050K66810	Booklet Gate
36	–	Chute (P/O PL 21.10 Item 14)
37	–	Buffer Gate
38	–	Guide (P/O PL 21.10 Item 7)
39	–	Upper Entrance Chute (P/O PL 21.10 Item 16)
40	–	Guide (P/O PL 21.10 Item 16)
41	–	Harness Guide
42	–	Wire Harness (P/O PL 21.10 Item 16)
43	–	Lower Exit Chute (P/O PL 21.10 Item 1)
44	068K55840	Buffer Gate Solenoid

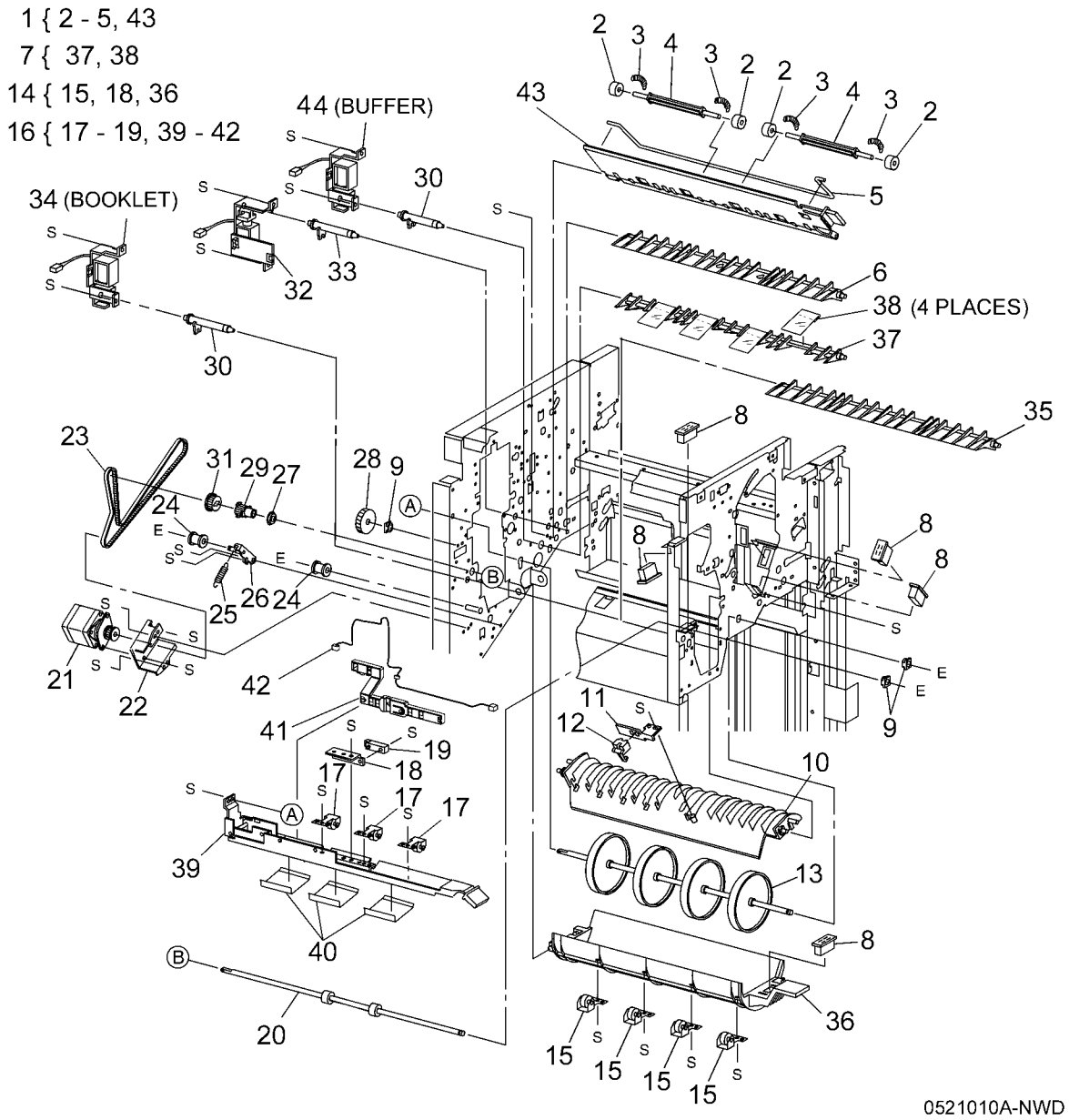

PL 21.11 Finisher Transport (2 of 2)

Item	Part	Description
1	054K38200	Top Tray Exit Baffle Assembly (Not Spared)
2	130K88190	Top Tray Exit Sensor
3	022K74720	Left Exit Pinch Roller
4	–	Top Tray Lower Exit Baffle (Not Spared)
5	022K75720	Exit Drive Shaft
6	–	Sensor Bracket (Not Spared)
7	130E87370	Top Tray Full Sensor (REP 21.24)
8	–	Magnet (Not Spared)
9	–	Bushing
10	054K28220	Upper Exit Chute Assembly
11	–	Pinch Roller (P/O PL 21.11 Item 10)
12	–	Spring (P/O PL 21.11 Item 10)
13	–	Shaft (P/O PL 21.11 Item 10)
14	–	Chute Assembly
15	130E87410	Gate Sensor (REP 21.23)
16	–	Sensor Harness (Not Spared)
17	–	Sensor Bracket (Not Spared)
18	022K71431	Transport Roll
19	–	Pulley (53T/23T)
20	413W66150	Bearing
21	020E37690	Pulley (20T)
22	–	Pulley (Not Spared)
23	–	Tension Bracket (Not Spared)
24	–	Tension Spring (Not Spared)
25	020E37700	Pulley (20T/20T)
26	807E04720	Gear (20T)
27	423W40054	Registration Motor Drive Belt
28	423W86454	Exit Motor Drive Belt
29	–	Motor Bracket (Not Spared)
30	127K40282	Registration Motor (Reg) and Exit Motor (Exit)
31	–	Upper Exit Chute (P/O PL 21.11 Item 10)
32	022K74730	Right Exit Pinch Roll
33	–	Booklet Entrance Roll (Not Spared)
34	054K27641	Booklet Chute Assembly
35	–	Chute Assembly (P/O PL 21.11 Item 34)
36	–	Booklet Chute (P/O PL 21.11 Item 34)
37	–	Torsion Spring (P/O PL 21.11 Item 34)
38	–	Pinch Roll Assembly
39	–	Plate (Not Spared)
40	054K27650	Booklet Upper Chute
41	121E92720	Magnet
42	054E27390	Lower Entrance Chute
43	020E44920	Ball Pulley

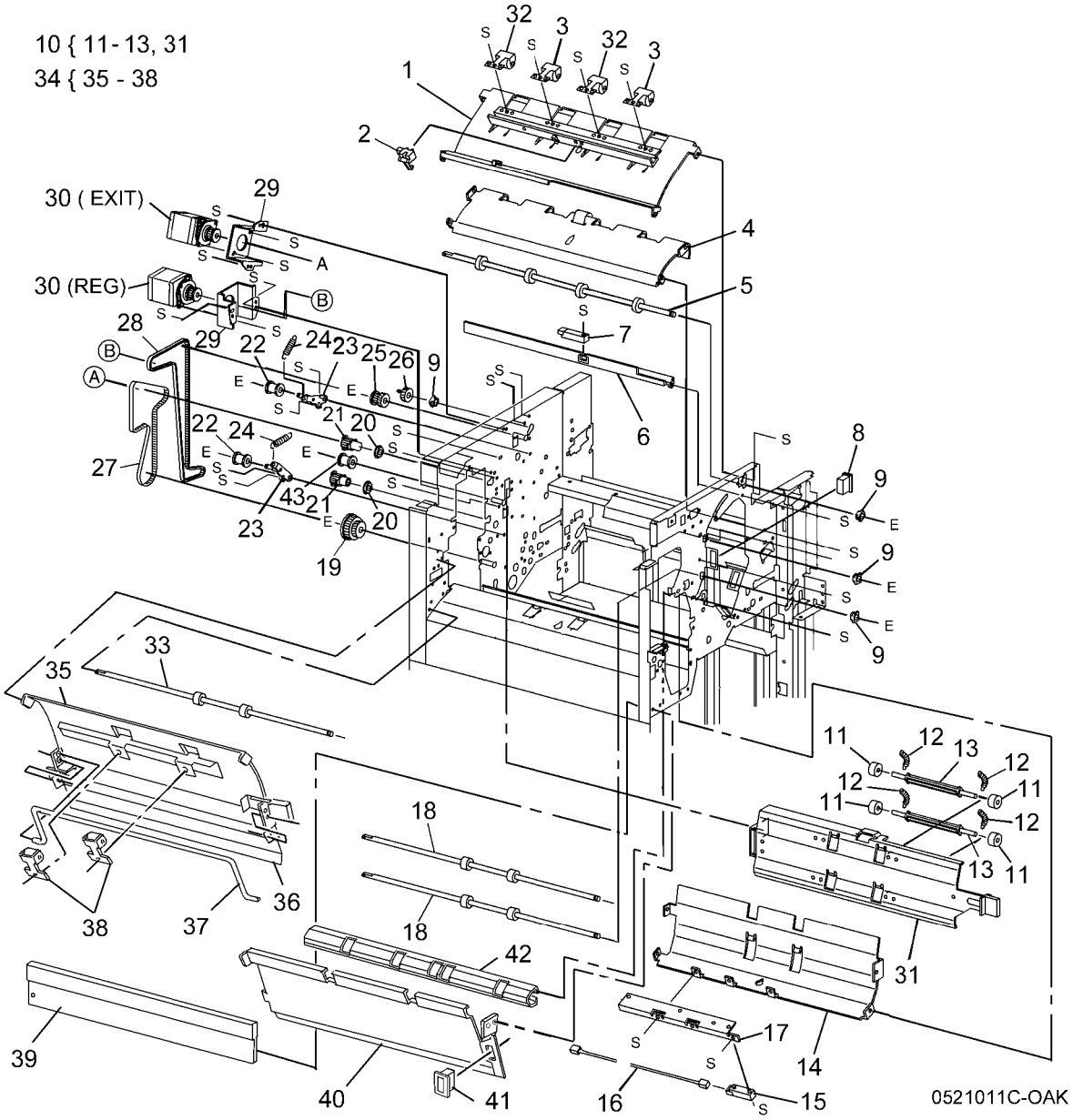

PL 21.12 Finisher Electrical

Item	Part	Description
1	–	Left Harness Guide (Not Spared)
2	–	Right Harness Guide (Not Spared)
3	960K51453	Finisher PWB (REP 21.29)
4	–	Finisher PWB Cover (Not Spared)
5	–	Finisher PWB Cover (Not Spared)
6	962K38740	AC Inlet Harness
7	105E15200	Finisher LVPS
8	–	LVPS Wire Harness (Not Spared)
9	–	Screw (Not Spared)
10	960K31130	AC Filter
11	–	Bracket (Not Spared)
12	962K67080	I/F Finisher Cable
13	–	Harness Assembly (Not Spared)
14	–	Harness Guide (Not Spared)
15	–	Harness Guide (Not Spared)
16	–	Connector Plate (Not Spared)
17	962K29160	Harness
18	960K04681	H-Transport PWB

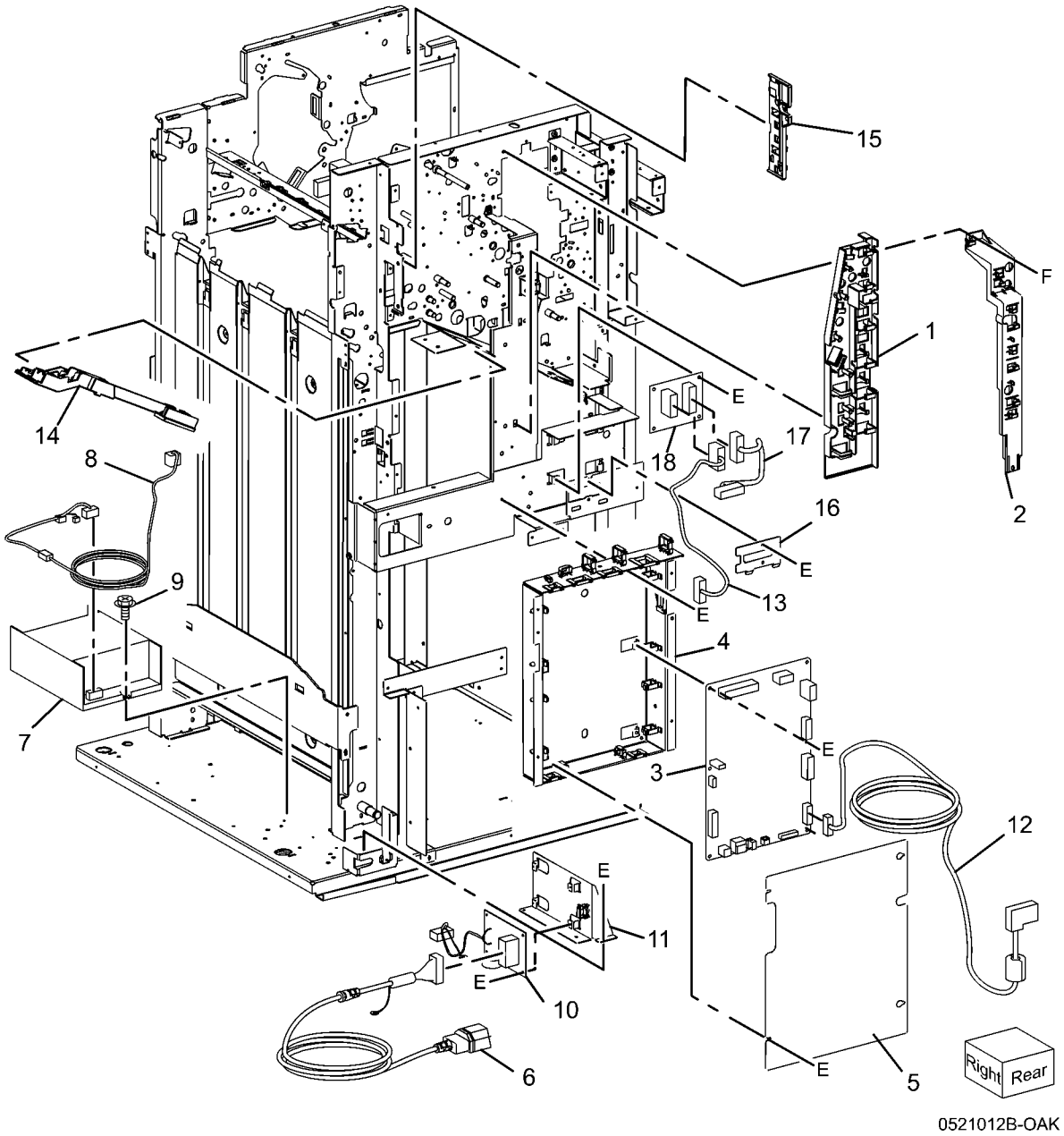

PL 21.13 Finisher Harness

Item	Part	Description
1	–	Main Sensor Harness (Not Spared)
2	–	Main Drive Harness (Not Spared)
3	–	Interface Harness (Not Spared)
4	–	Transport Entrance Sensor Harness (Not Spared)
5	–	Buffer Sensor Harness (Not Spared)
6	–	Top Exit Sensor Harness (Not Spared)
7	–	Top Sensor Harness (Not Spared)
8	–	Punch Drive Harness (Not Spared)
9	–	Punch Sensor Harness (Not Spared)
10	–	LVPS Harness (Not Spared)
11	962K58950	Interlock Harness
12	960K54831	Booklet PWB

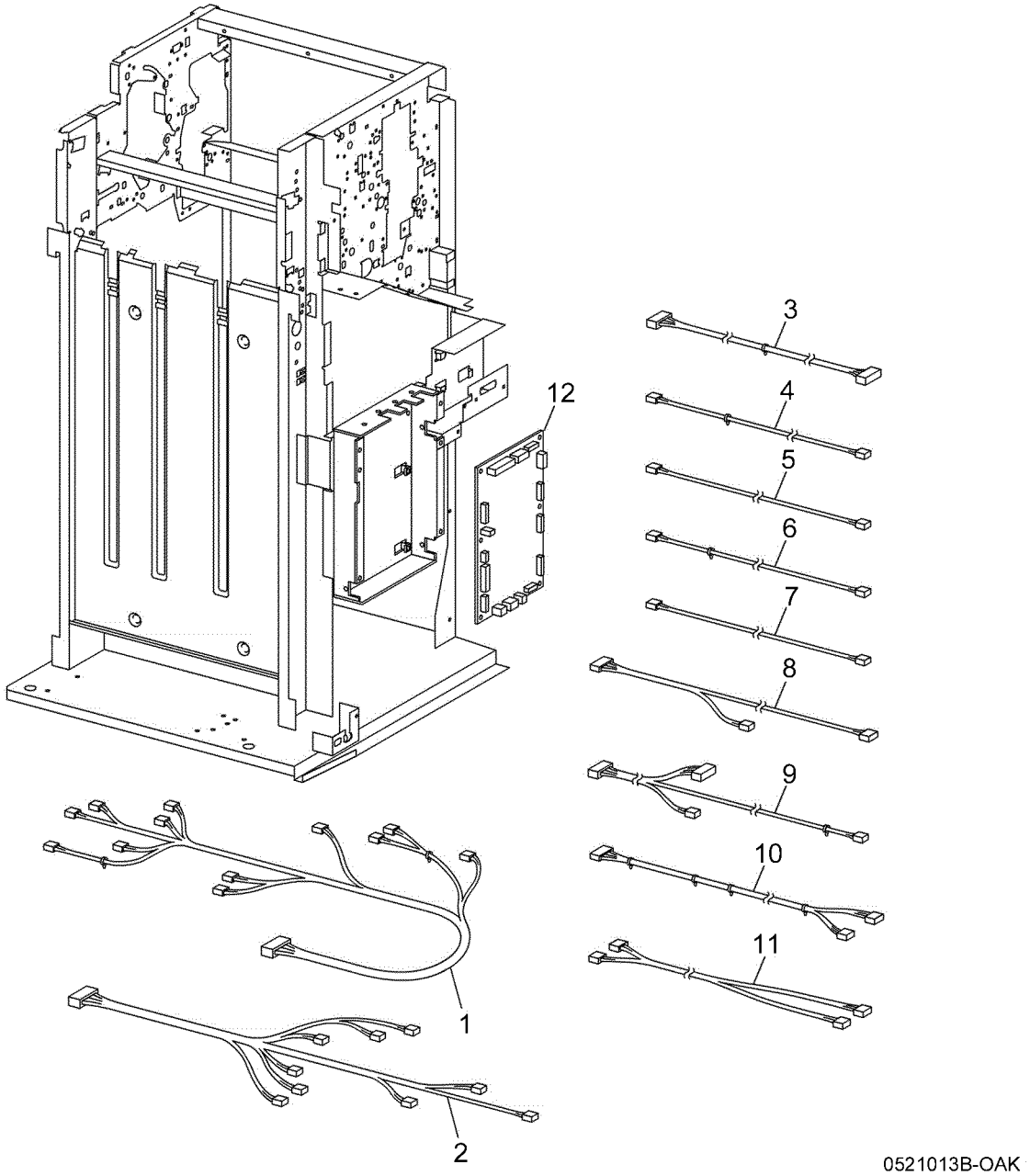

PL 21.15 Booklet Accessory

Item	Part	Description
1	–	Tray Guide Assembly (Not Spared)
2	–	Screw (Not Spared)
3	–	Right Rail
4	–	Wire Harness
5	050K62855	Booklet Tray Assembly
6	–	Knob Screw (Not Spared)
7	130K88770	Booklet Drawer Set Sensor
8	–	Label (Not Spared)
9	–	Label (Not Spared)
10	–	Label (Not Spared)
11	015K79780	Right Side Assembly
12	801K29032	Booklet Drawer Assembly
13	–	Left Rail
14	015K67980	Left Rail Assembly
15	068K55260	Connector Assembly
16	962K59080	Wire Harness
17	962K59090	Wire Harness
18	962K59100	Wire Harness

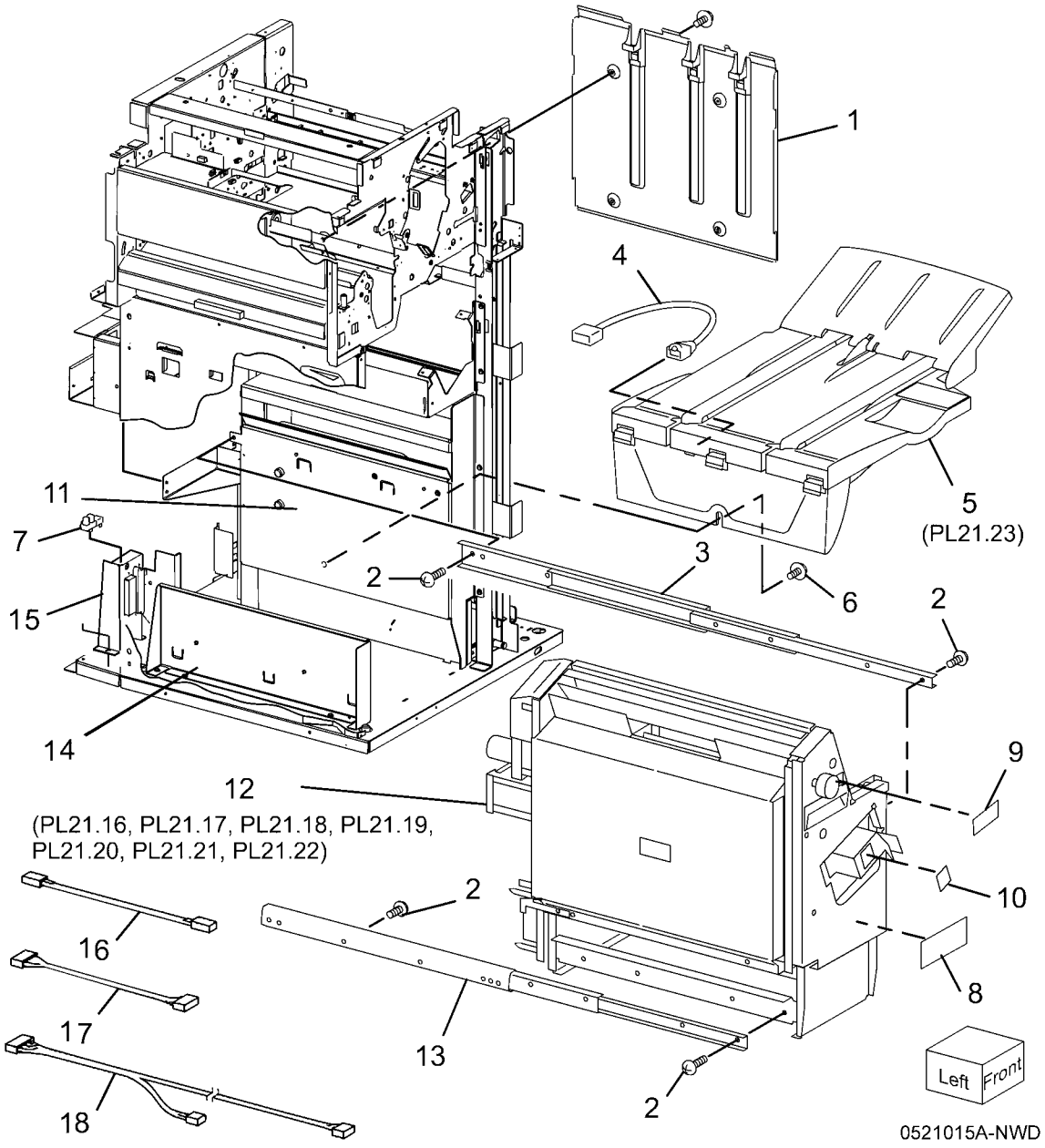

PL 21.16 Booklet Component (1 of 7)

Item	Part	Description
1	–	Right Stapler Rail
2	423W45954	Belt
3	–	Harness Cover (P/O PL 21.15 Item 12)
4	–	Bearing (P/O PL 21.15 Item 12)
5	499W14432	Gear (31T)
6	005E24900	Collar
7	–	Shaft (P/O PL 21.15 Item 12)
8	–	Ball Bearing (P/O PL 21.15 Item 12)
9	003E63390	Knob
10	–	Bracket (P/O PL 21.15 Item 12)
11	–	Staple (REP 21.17)
12	–	Latch
13	–	Stapler Base (P/O PL 21.15 Item 12)
14	–	Front Cover
15	–	Paper Guide
16	–	Left Cover (P/O PL 21.15 Item 12)
17	–	Left Stapler Rail (P/O PL 21.15 Item 12)
18	–	Label (P/O PL 21.15 Item 12)
19	–	Label (P/O PL 21.15 Item 12)
20	029K92175	Booklet Stapler Unit
21	–	Front Cover (P/O PL 21.15 Item 12)
22	–	Cover (P/O PL 21.15 Item 12)
23	–	Paper Guide (Clinch)
24	–	Label (4a) (P/O 21.15 Item 12)
25	105E15120	Eliminator
26	–	Booklet Assembly (P/O PL 21.15 Item 12)
27	–	Frame Assembly (P/O PL 21.15 Item 12)
28	–	Paper Guide (P/O PL 21.16 Item 20)
29	–	Label (Not Spared)
30	020E45160	Pulley
31	–	Guide

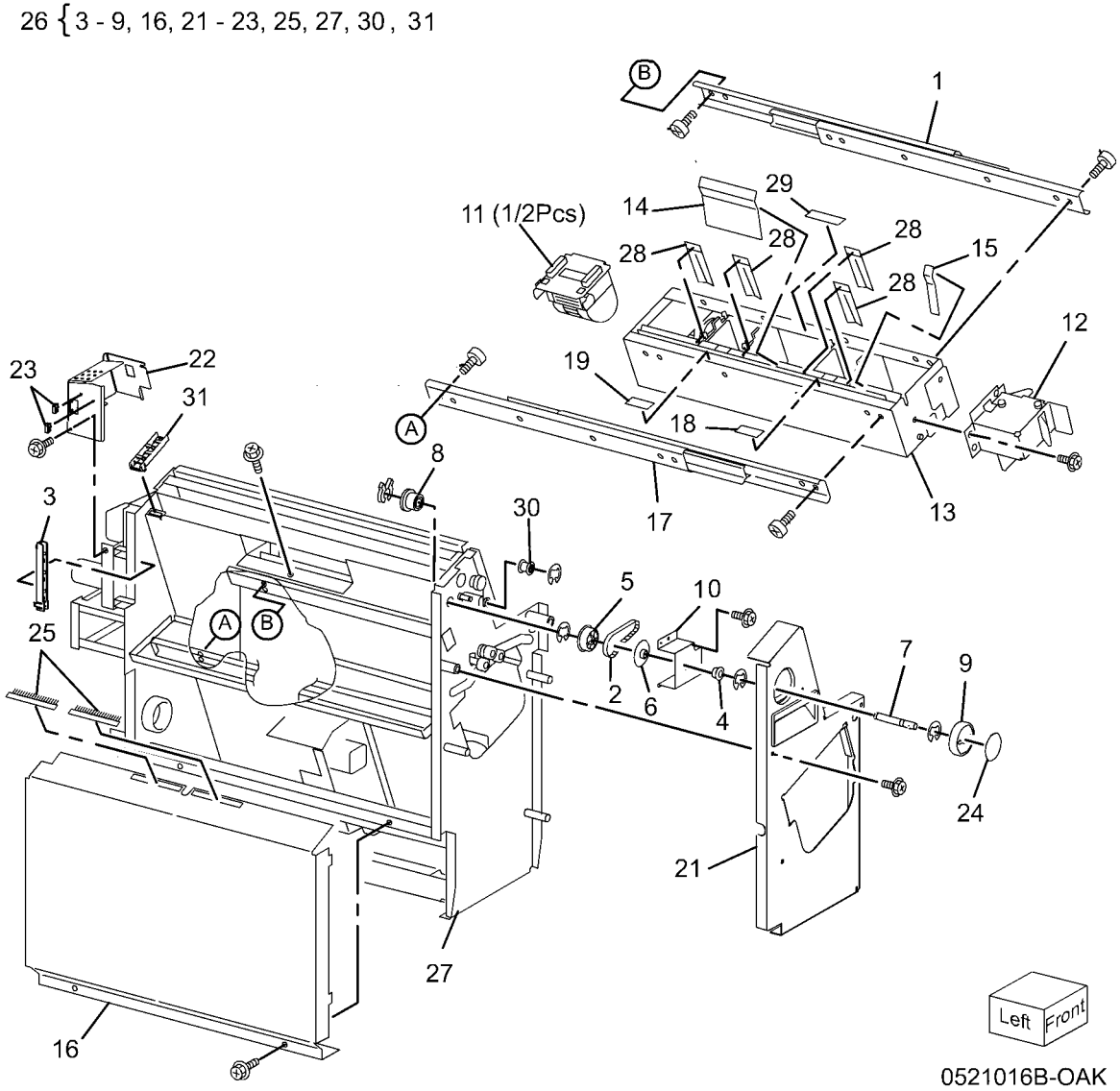

PL 21.17 Booklet Component (2 of 7) (End Guide)

Item	Part	Description
1	054K39250	Compile Chute Assembly
2	127K51990	Booklet End Guide Motor
3	–	Pulley (P/O PL 21.17 Item 1)
4	–	Gear Pulley (40T/20T) (P/O PL 21.17 Item 1)
5	–	Washer (P/O PL 21.17 Item 1)
6	–	Belt (P/O PL 21.17 Item 1)
7	130K70160	Booklet End Guide Home Sensor
8	–	Shaft (P/O PL 21.17 Item 1)
9	–	Bracket (P/O PL 21.17 Item 1)
10	–	Gear (14T) (P/O PL 21.17 Item 1)
11	–	Booklet Paddle Motor (P/O PL 21.17 Item 1, PL 21.17 Item 14)
12	–	Gear (14T) (P/O PL 21.17 Item 1, PL 21.17 Item 14)
13	–	Bracket (P/O PL 21.17 Item 1, PL 21.17 Item 14)
14	–	Booklet Paddle Motor Assembly (P/O PL 21.17 Item 1)
15	–	Belt Clamp (P/O PL 21.17 Item 1)
16	–	Paddle Bracket (P/O PL 21.17 Item 1)
17	–	Paddle Shaft Assembly (P/O PL 21.17 Item 1)
18	–	Chute (Rear) (P/O PL 21.17 Item 1)
19	–	End Guide (P/O PL 21.17 Item 1)
20	–	Support Bracket (P/O PL 21.17 Item 1)
21	–	Adjust Bracket (P/O PL 21.17 Item 1)
22	–	Compile Chute (P/O PL 21.17 Item 1)
23	–	Chute (Front) (P/O PL 21.17 Item 1)
24	–	Gear (14T) (P/O PL 21.17 Item 1)
25	–	Guide (Not Spared)

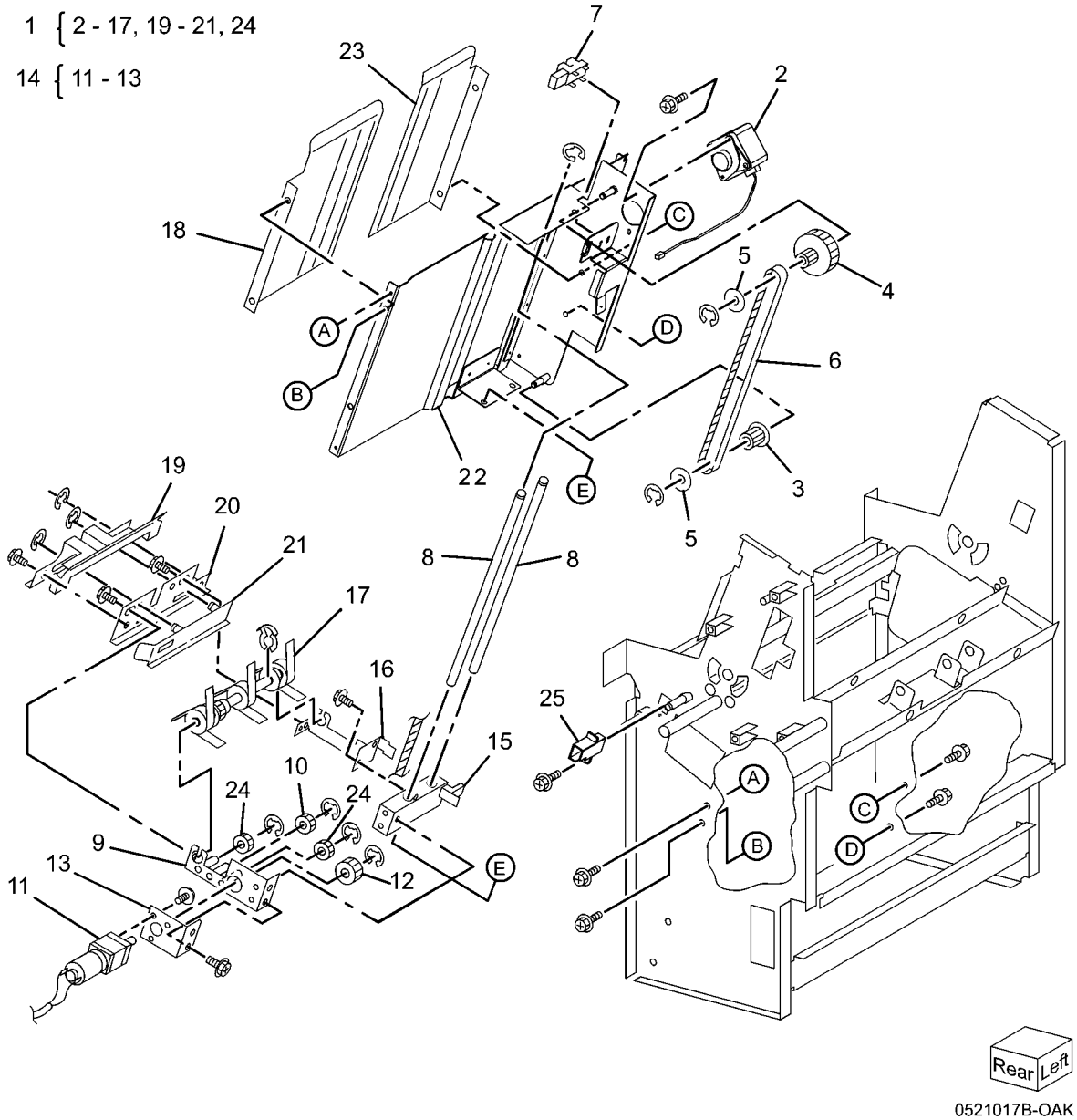

PL 21.18 Booklet Component (3 of 7)

Item	Part	Description
1	–	Bracket (P/O PL 21.15 Item 12)
2	–	Wire Harness (Not Spared)
3	130K70160	Knife Home Sensor, Knife Folder Sensor
4	–	Chute (P/O PL 21.15 Item 12)
5	–	Shaft (P/O PL 21.18 Item 20)
6	–	Actuator (Not Spared)
7	413W11860	Bearing
8	–	Joint (P/O PL 21.18 Item 20)
9	–	Shaft (P/O PL 21.18 Item 20)
10	–	Shaft (P/O PL 21.18 Item 20)
11	–	Bearing (P/O PL 21.18 Item 20)
12	–	Bracket (P/O PL 21.18 Item 20)
13	–	Knife Bracket Assembly (P/O PL 21.18 Item 20)
14	–	Guide (P/O PL 21.18 Item 20)
15	–	Shaft (P/O PL 21.18 Item 20)
16	–	Shaft (P/O PL 21.18 Item 20)
17	807E02061	Gear (42T)
18	–	Bracket (P/O PL 21.15 Item 12)
19	130E87410	Booklet Compile No Paper Sensor
20	015K75682	Knife Assembly
21	–	Tie Plate (P/O PL 21.18 Item 20)
22	–	Edge Saddle (P/O PL 21.18 Item 20)
23	–	Clamp (Not Spared)

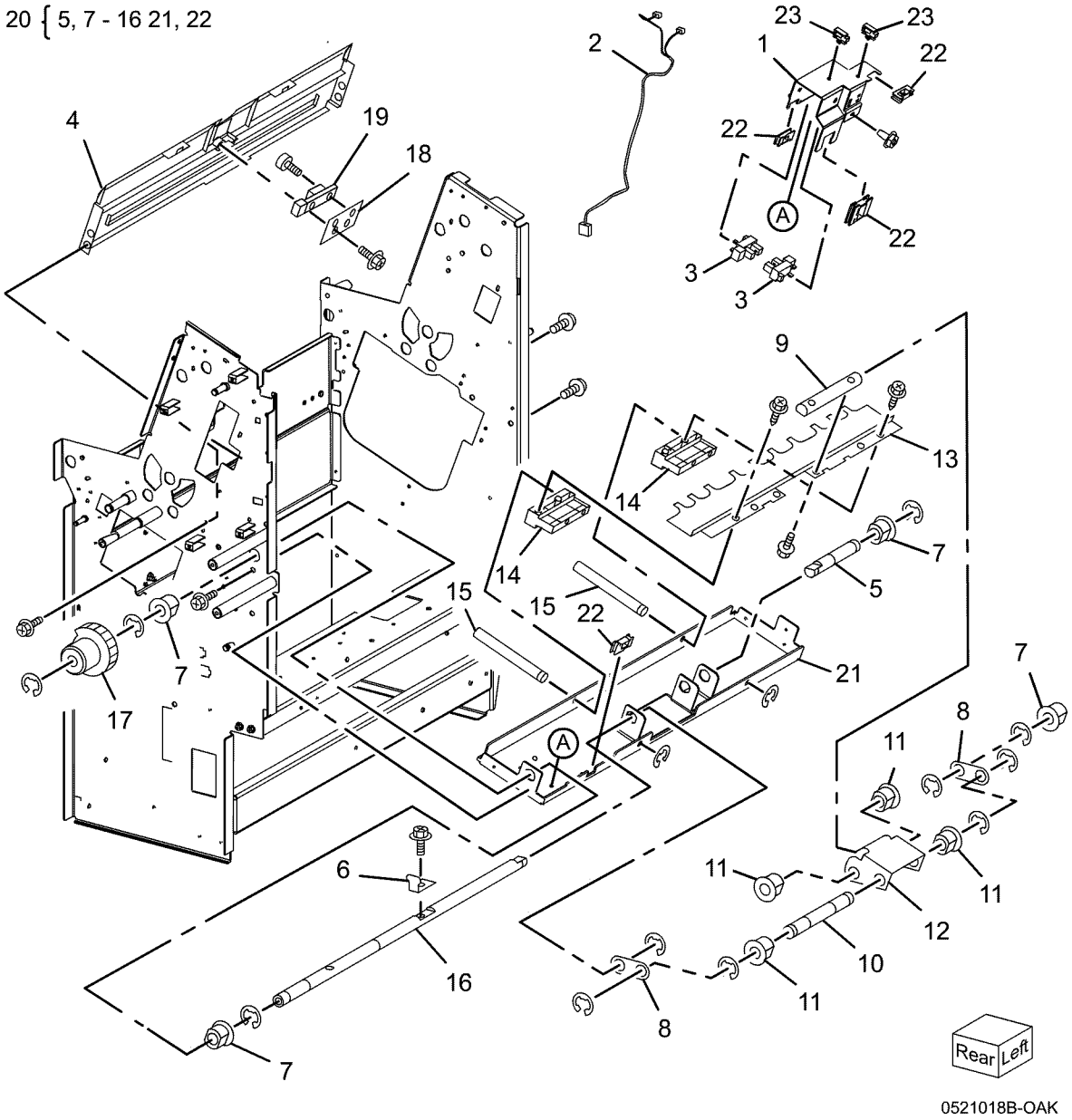

PL 21.19 Booklet Component (4 of 7)

Item	Part	Description
1	–	Front Tamper Guide
2	–	Rear Tamper Guide (P/O PL 21.15 Item 12)
3	–	Clamp (P/O PL 21.15 Item 12)
4	–	Clamp (P/O PL 21.15 Item 12)
5	032E27380	Guide
6	–	Frame (P/O PL 21.15 Item 12)
7	130K88770	Booklet Tamper Home Sensor
8	–	Static Eliminator (P/O PL 21.15 Item 12)
9	127K58040	Booklet Tamper Motor
10	–	Bracket (P/O PL 21.15 Item 12)
11	038K18720	Compile Guide

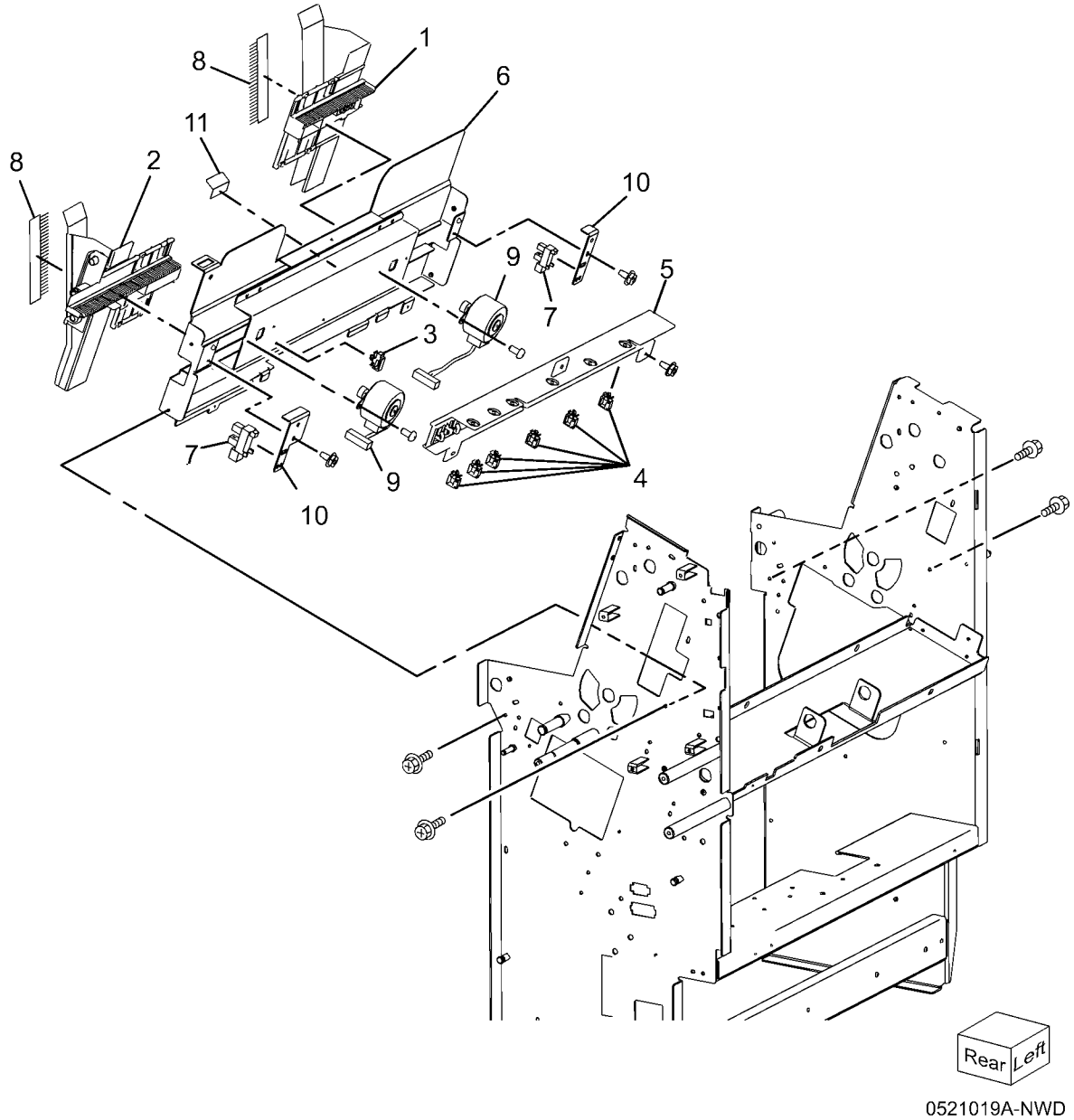

PL 21.20 Booklet Component (5 of 7)

Item	Part	Description
1	022K71020	Booklet Pre-Folding Roll
2	022K71040	Booklet Pre-Folding Nip Roll
3	022K66870	Booklet Folding Roll
4	022K66880	Booklet Folding Nip Roll
5	–	Ball Bearing (P/O PL 21.15 Item 12)
6	–	Shaft (P/O PL 21.15 Item 12)
7	–	Bearing (P/O PL 21.15 Item 12)
8	815E44910	Tension Plate 1
9	–	Spring (P/O PL 21.15 Item 12)
10	815E44920	Tension Plate 2
11	–	Spring (Not Spared)
12	–	Booklet Eject Roll (P/O PL 21.15 Item 12)
13	020E37140	Pulley (16T)
14	815E36110	Spring Plate
15	807E02040	Gear Pulley (20T/25T)
16	–	Belt (P/O PL 21.15 Item 12)
17	007E89980	Gear (16T)
18	007E89990	Gear (38T/18T)
19	007E89970	Gear (18T)
20	807E09510	Gear (16T)
21	007E77770	Gear (38T)
22	022E96060	Roll

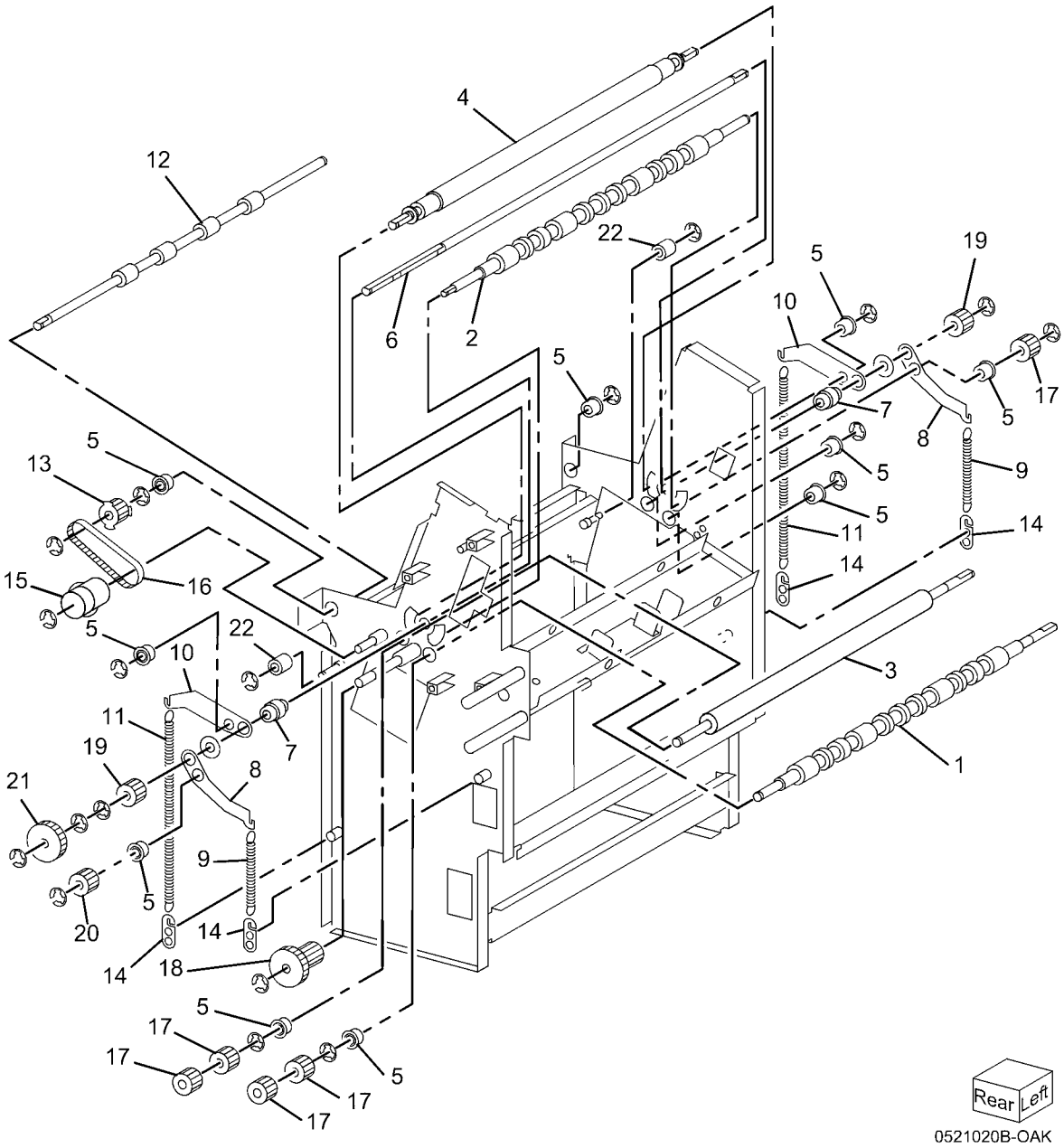

PL 21.21 Booklet Component (6 of 7) (Chute)

Item	Part	Description
1	–	Chute (P/O PL 21.15 Item 12)
2	–	Static Eliminator (P/O PL 21.15 Item 12)
3	–	Screw (P/O PL 21.21 Item 15)
4	–	Bracket (P/O PL 21.15 Item 12)
5	130E87370	Booklet In Sensor
6	–	Pinch Roll (P/O PL 21.15 Item 12)
7	–	Chute (P/O PL 21.15 Item 12)
8	–	Booklet In Roll (P/O PL 21.15 Item 12)
9	–	Ball Bearing (P/O PL 21.15 Item 12)
10	–	Gear (16T) (P/O PL 21.15 Item 12)
11	–	Shaft (P/O PL 21.15 Item 12)
12	–	Harness Cover (P/O PL 21.15 Item 12)
13	–	Bearing (P/O PL 21.15 Item 12)
14	–	Gear (17T) (P/O PL 21.15 Item 12)
15	054K33910	Upper Exit Chute Assembly
16	003E63380	Knob
17	–	Static Eliminator (P/O PL 21.15 Item 12)
18	–	Upper Exit Chute (P/O PL 21.21 Item 15)
19	–	Bracket (P/O PL 21.15 Item 12)
20	–	Wire Harness (P/O PL 21.15 Item 12)
21	130E87410	Booklet Folder Roll Exit Sensor
22	–	Lower Exit Chute (P/O PL 21.21 Item 15)
23	121E92720	Magnet

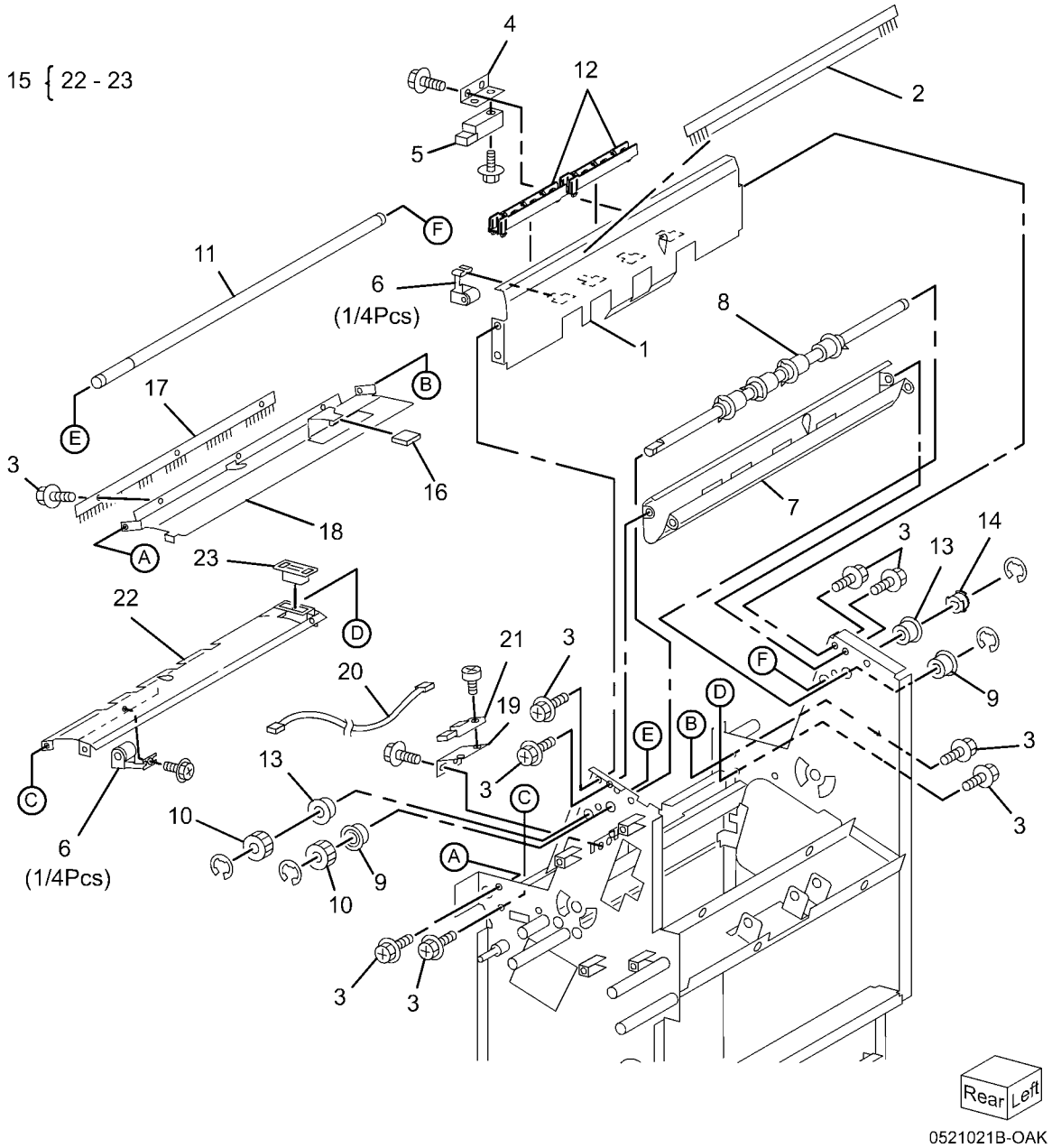

PL 21.22 Booklet Component (7 of 7)

Item	Part	Description
1	–	Bracket (P/O PL 21.15 Item 12)
2	127K52400	Booklet Fold Motor
3	–	Bracket (P/O PL 21.15 Item 12)
4	127K51990	Booklet Paper Path Motor
5	–	Bracket (P/O PL 21.15 Item 12)
6	–	Bracket (P/O PL 21.15 Item 12)
7	007E77620	Gear (45T)
8	807E20000	Gear (43T/14T)
9	007E77600	Gear (44T/16T)
10	120E28080	Knife Solenoid
11	807E01750	Gear (27T/34T)
12	–	Ball Bearing (P/O PL 21.15 Item 12)
13	809E41620	Spring
14	962K57710	Wire Harness
15	962K57680	Wire Harness
16	962K57690	Wire Harness
17	–	Bracket (P/O PL 21.15 Item 12)
18	–	Bracket (P/O PL 21.15 Item 12)
19	–	Bracket (P/O PL 21.15 Item 12)
20	–	Spring (P/O PL 21.15 Item 12)
21	–	Spacer (P/O PL 21.15 Item 12)
22	807E02080	Gear (48T/18T)
23	049K00770	Link
24	–	Belt (P/O PL 21.15 Item 12)
25	807E19210	Gear Pulley (41T/14T)

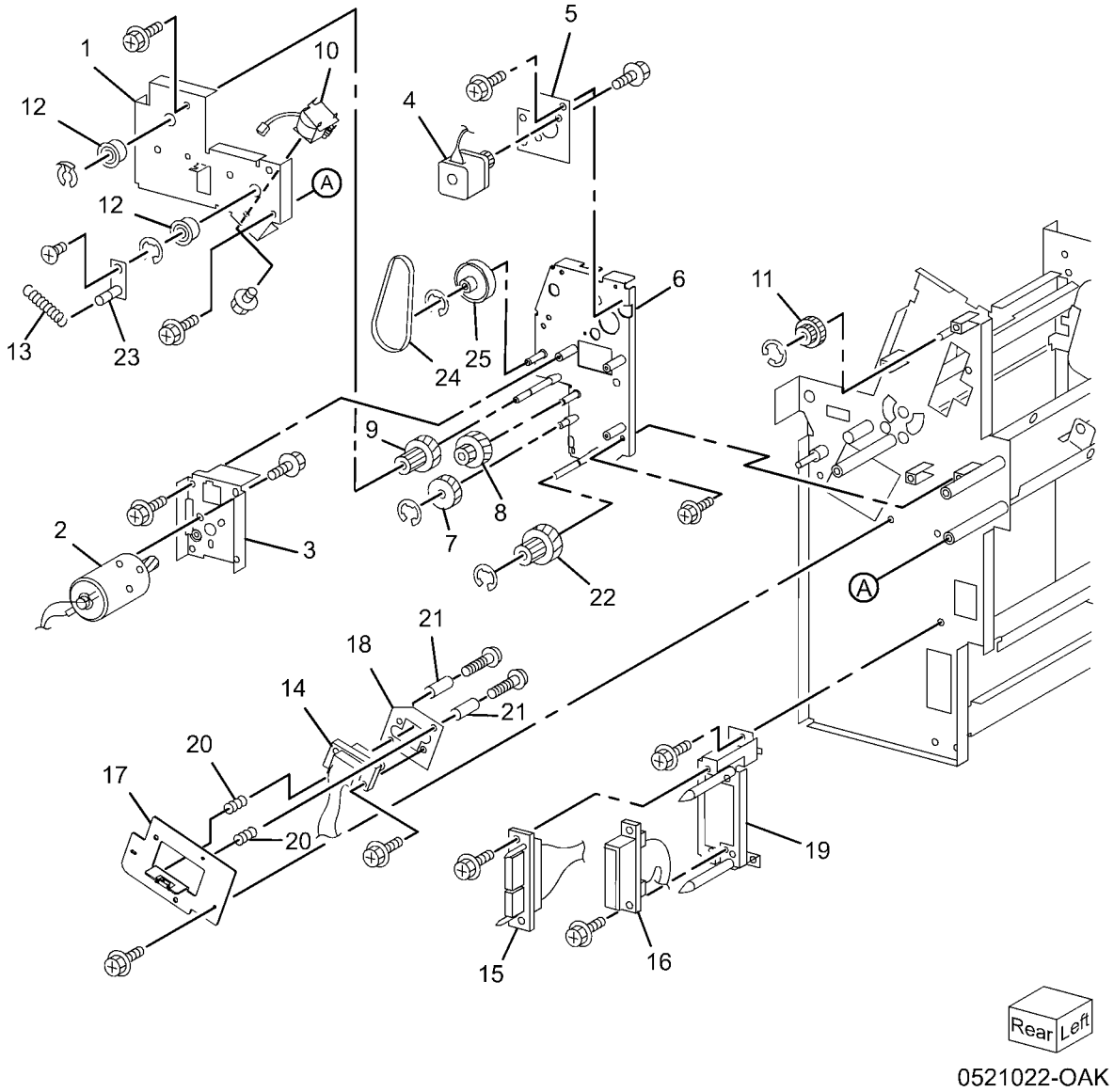

PL 21.23 Booklet Tray Component

Item	Part	Description
1	–	Tray
2	–	Upper Tray (P/O PL 21.15 Item 5)
3	–	Bracket (P/O PL 21.15 Item 5)
4	127K58932	Tray Belt Drive Motor
5	–	Bracket (P/O PL 21.15 Item 5)
6	–	Spring (P/O PL 21.15 Item 5)
7	–	Gear Pulley (P/O PL 21.15 Item 5)
8	–	Roll (P/O PL 21.15 Item 5)
9	–	Belt (P/O PL 21.15 Item 5)
10	–	Pulley (P/O PL 21.15 Item 5)
11	–	Bearing (P/O PL 21.15 Item 5)
12	–	Roll (P/O PL 21.15 Item 5)
13	–	Shaft (P/O PL 21.15 Item 5)
14	–	Shaft (P/O PL 21.15 Item 5)
15	930W00112	Booklet No Paper Sensor
16	–	Bracket (P/O PL 21.15 Item 5)
17	–	Actuator (P/O PL 21.23 Item 21)
18	–	Spring (P/O PL 21.23 Item 21)
19	–	Bracket (P/O PL 21.15 Item 5)
20	–	Lower Tray (P/O PL 21.15 Item 5)
21	–	Bracket (P/O PL 21.15 Item 5)
22	023E27160	Belt

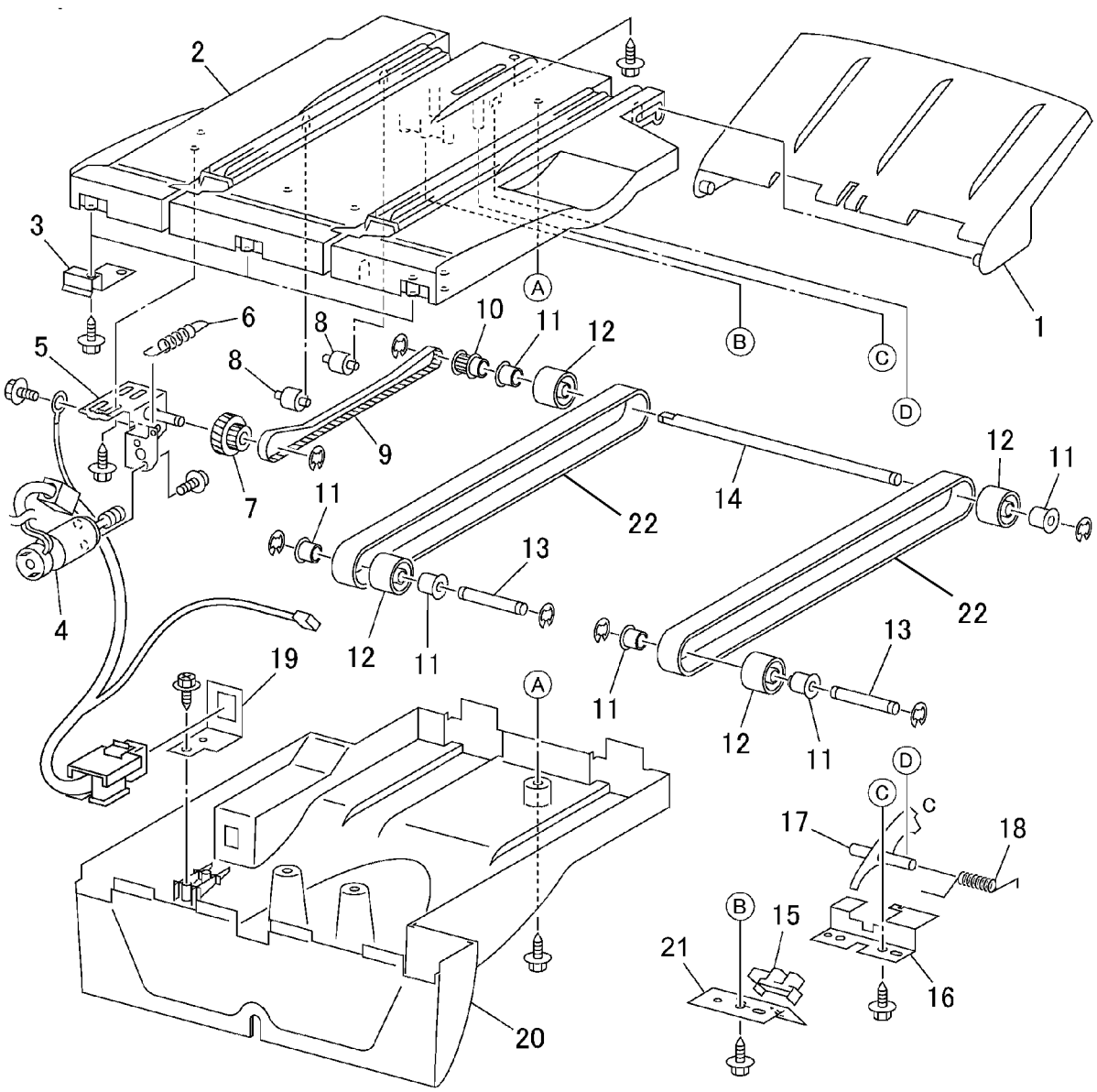

PL 21.24 H-Transport (1 of 5)

Item	Part	Description
1	–	H-Transport Assembly (REF: PL 21.1 Item 2) (REP 21.12)
2	003K17251	Knob
3	–	Lower Chute Assembly (P/O PL 21.24 Item 1)
4	–	Left Upper Chute Assembly
5	059K55857	Decurler Transport Assembly
6	423W27054	Belt
7	–	Connector Cover (P/O PL 21.24 Item 1)
8	–	Bracket (P/O PL 21.24 Item 1)
9	–	Decurler Front Cover (P/O PL 21.24 Item 1)
10	848E18480	Rear Cover
11	848E18490	Decurler Rear Cover
12	848E18501	Decurler Right Hand Cover
13	848E18522	Decurler Top Cover
14	–	Top Cover Assembly (P/O PL 21.24 Item 1)
15	–	Stud Bracket (P/O PL 21.24 Item 1)
16	962K61011	Wire Harness
17	–	Shield (P/O PL 21.24 Item 1)
18	–	Shield (P/O PL 21.24 Item 1)

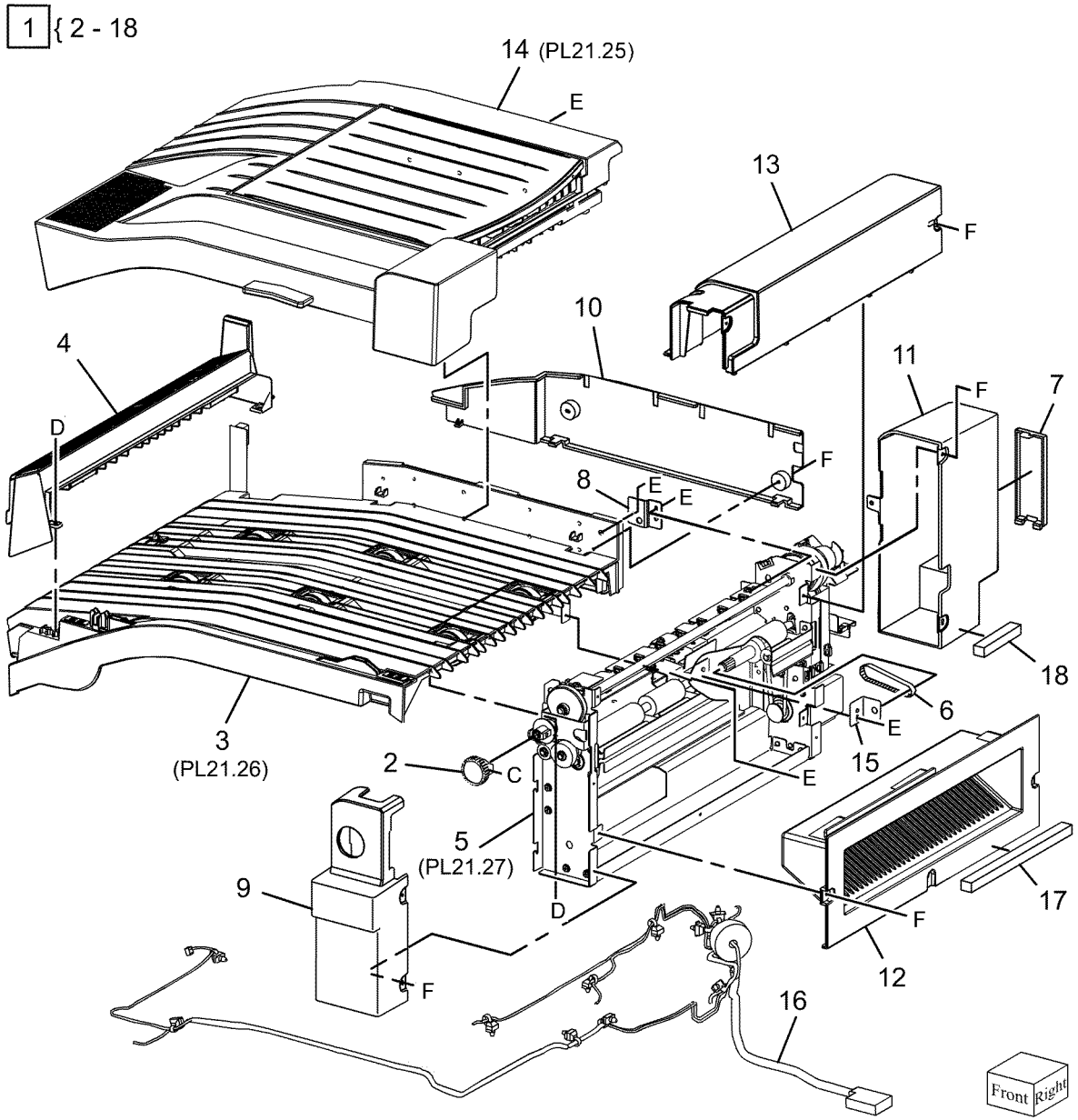

PL 21.25 H-Transport (2 of 5)

Item	Part	Description
1	–	Top Cover Assembly (Not Spared)
2	–	Hinge Assembly (P/O PL 21.25 Item 1)
3	–	Bracket (P/O PL 21.25 Item 1)
4	–	Pinch Roll Assembly (P/O PL 21.25 Item 1, PL 21.25 Item 9)
5	–	Upper Chute (P/O PL 21.25 Item 1, PL 21.25 Item 9)
6	–	Upper Plate Chute (P/O PL 21.25 Item 1, PL 21.25 Item 9)
7	–	Upper Chute Spring (Not Spared)
8	848K37393	Top Cover Assembly
9	054K35352	Upper Chute Assembly

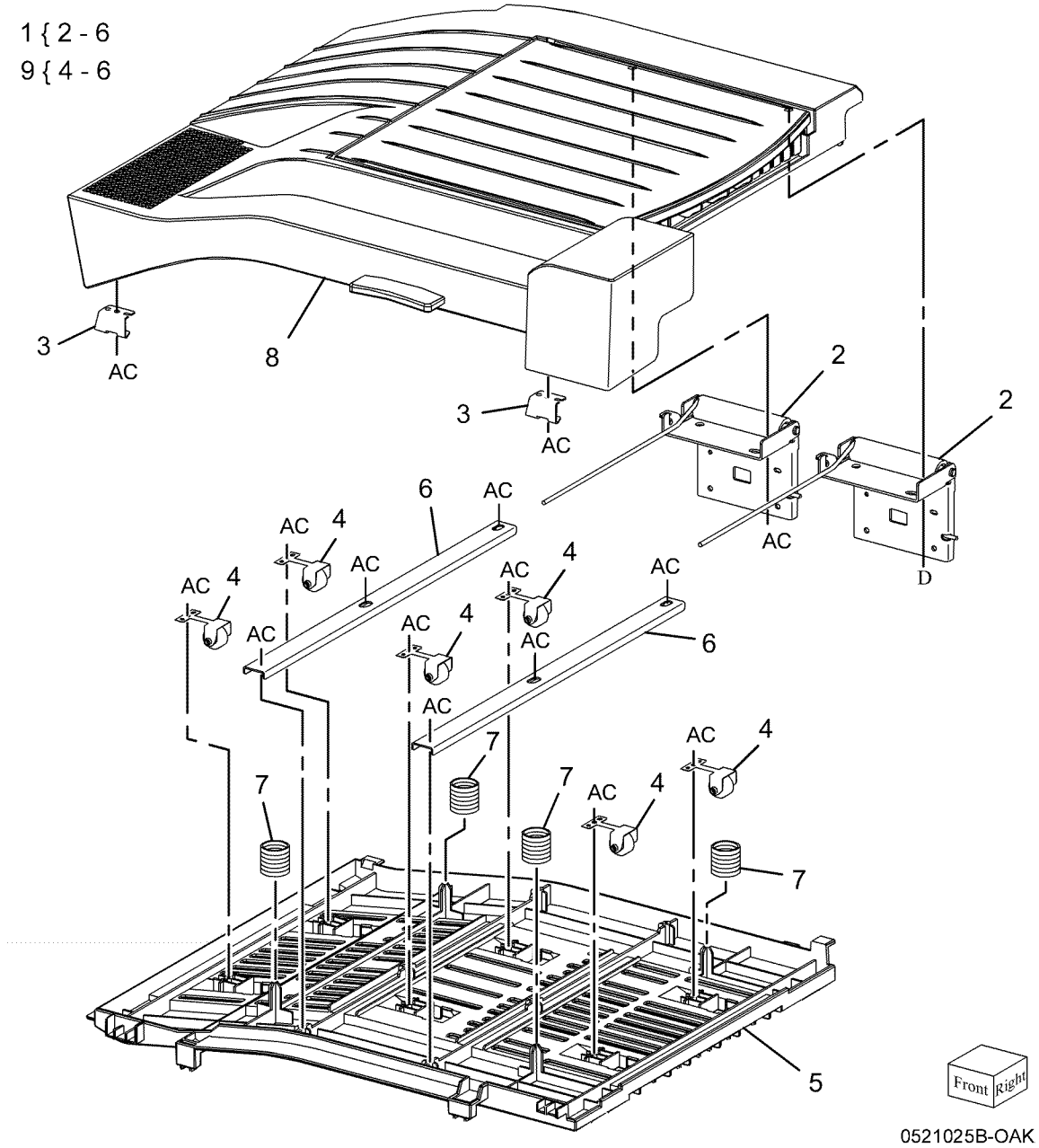

PL 21.26 H-Transport (3 of 5)

Item	Part	Description
1	–	Lower Chute Assembly
2	005E19650	Clutch
3	011E16881	Joint
4	020E37740	Pulley
5	020E45620	Pulley
6	020E45630	Pulley
7	020E45640	Pulley
8	059K55790	Roll Assembly
9	–	Roll Shaft Assembly (P/O PL 21.26 Item 1)
10	130K70160	H-Transport Interlock Sensor
11	–	Sensor Bracket (P/O PL 21.26 Item 1)
12	–	H-Transport Entrance Sensor (P/O PL 21.26 Item 1)
13	–	Sensor Bracket (P/O PL 21.26 Item 1)
14	068K58521	Tension Bracket Assembly
15	–	Belt (P/O PL 21.24 Item 6)
16	–	Bracket Assembly Tension (P/O PL 21.26 Item 14)
17	121E92720	Magnet
18	–	Spring (Not Spared)
19	–	Bearing (Not Spared)
20	–	Sleeve Bearing (Not Spared)
21	–	H-Transport Drive Belt (Not Spared) (REP 21.27)

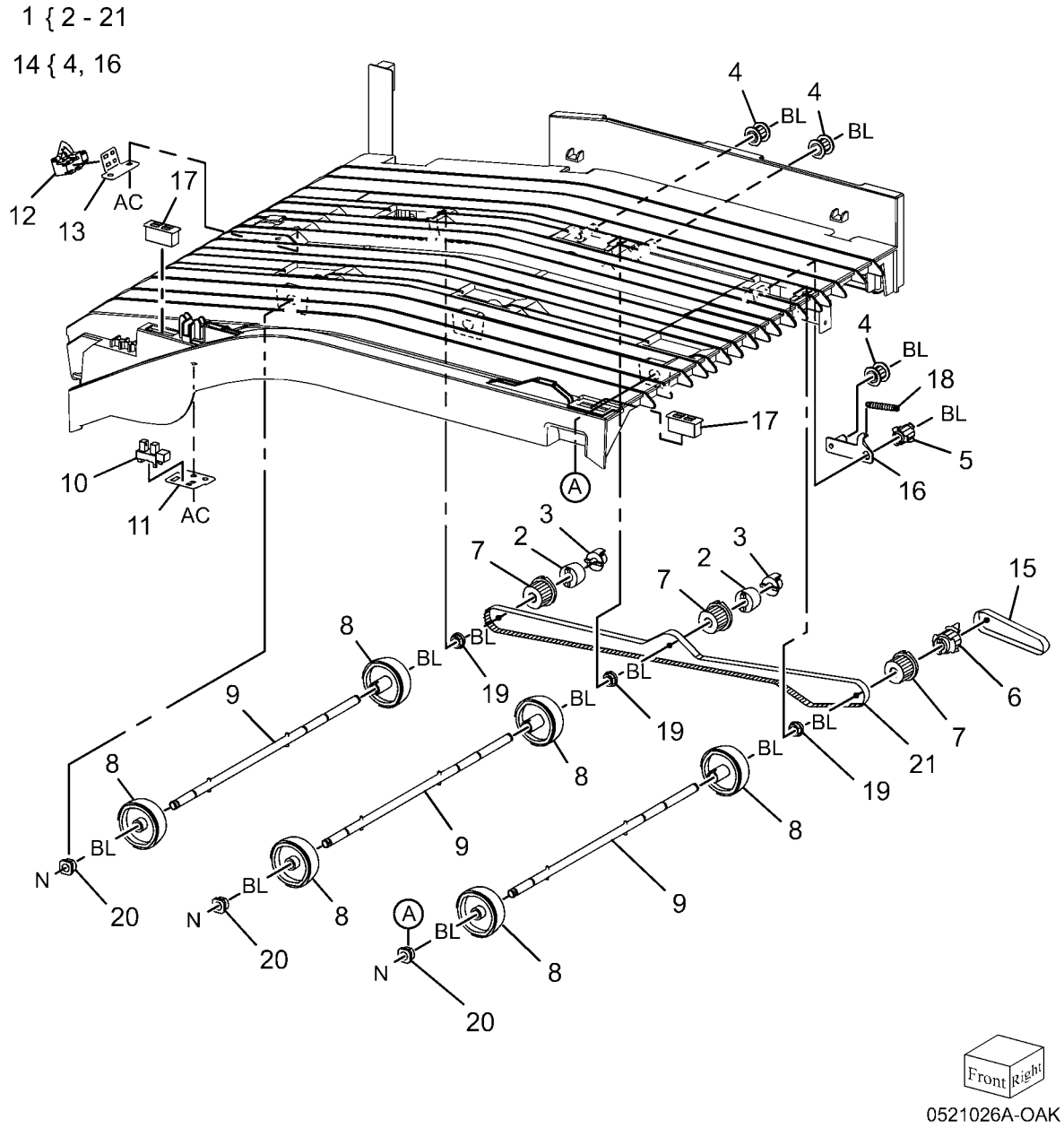

PL 21.27 H-Transport (4 of 5)

Item	Part	Description
1	007K14910	One Way Gear Assembly
2	008E96860	Decurler Cam
3	–	Bracket (P/O PL 21.24 Item 5)
4	130K70160	H-Transport Interlock Sensor-R, Decurler Cam Home Sensor
5	–	Sensor Bracket (P/O PL 21.24 Item 5)
6	–	Actuator (P/O PL 21.24 Item 5)
7	121K41980	Decurler Cam Clutch
8	–	Bearing (P/O PL 21.24 Item 5)
9	–	Bearing (P/O PL 21.24 Item 5)
10	–	Shaft (P/O PL 21.24 Item 5)
11	807E24170	Knob Gear (18T)
12	807E24180	Gear (18T)
13	807E24190	Gear (16T)
14	–	Bracket (P/O PL 21.24 Item 5)
15	–	Harness Bracket (P/O PL 21.24 Item 5)
16	–	Sensor Bracket (P/O PL 21.24 Item 5)
17	801K30761	Decurler Frame Assembly

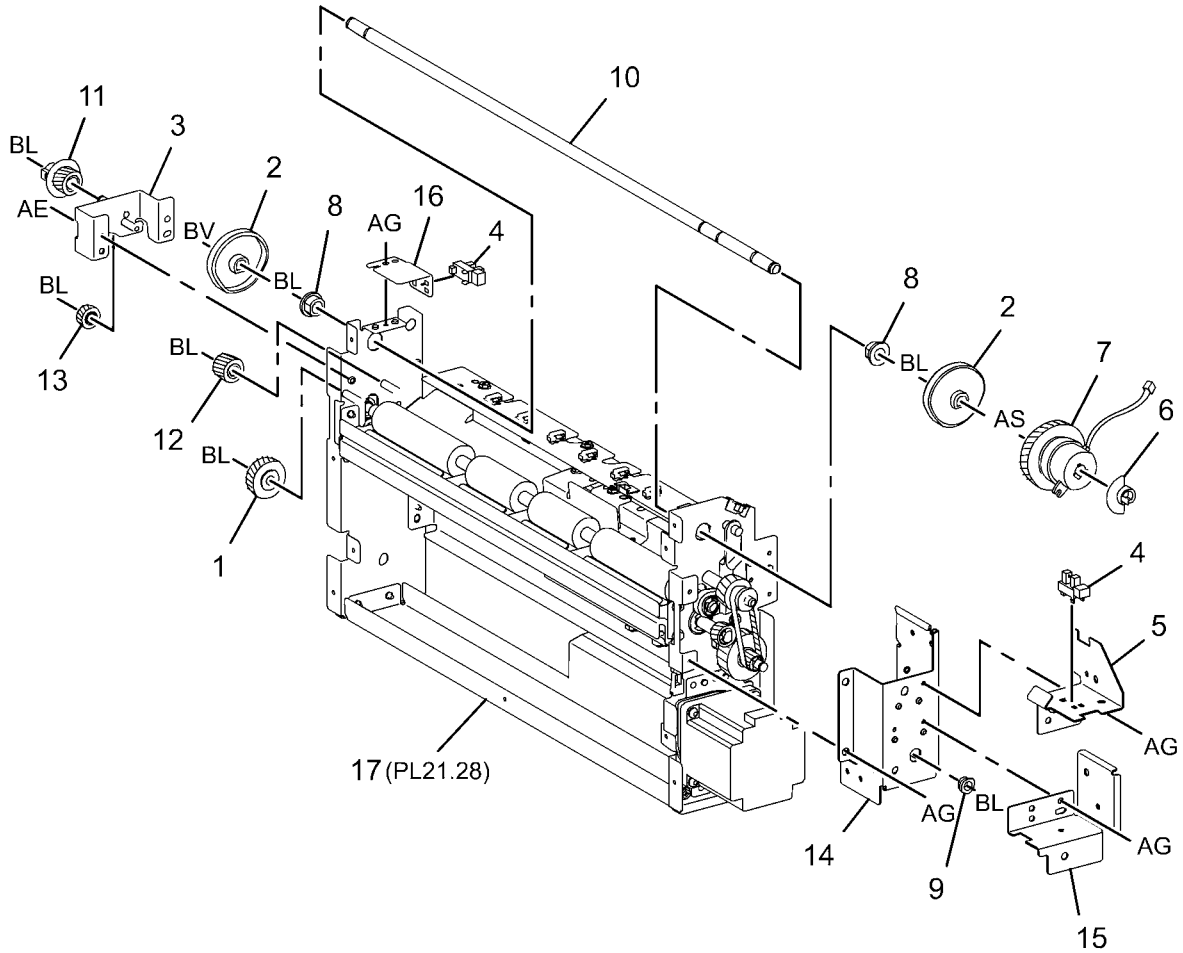

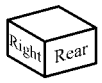

0521027A-NWD

PL 21.28 H-Transport (5 of 5)

Item	Part	Description
1	–	Collar (P/O PL 21.24 Item 5)
2	–	Shaft (P/O PL 21.24 Item 5)
3	–	Gear (P/O PL 21.24 Item 5)
4	031E97550	Arm
5	–	Decurler Upper Chute Assembly (P/O PL 21.24 Item 5)
6	–	Decurler Lower Chute Assembly (P/O PL 21.24 Item 5)
7	059K55801	Decurler Roll Assembly
8	068K58501	H-Transport Exit Sensor
9	–	Bearing (P/O PL 21.24 Item 5)
10	–	Bearing (P/O PL 21.24 Item 5)
11	–	Bearing (P/O PL 21.24 Item 5)
12	423W29254	Belt
13	423W26654	Belt
14	–	Shaft (P/O PL 21.24 Item 5)
15	–	Gear (16T) (P/O PL 21.24 Item 5)
16	–	Gear (18T/36T) (P/O PL 21.24 Item 5)
17	–	Gear (24T/20T) (P/O PL 21.24 Item 5)
18	–	Gear (27T/18T) (P/O PL 21.24 Item 5)
19	–	Harness Bracket (P/O PL 21.24 Item 5)
20	–	Decurler Shield (P/O PL 21.24 Item 5)
21	–	Plate (P/O PL 21.28 Item 23)
22	–	H-Transport Motor (P/O PL 21.28 Item 23)
23	127K57061	H-Transport Motor Assembly

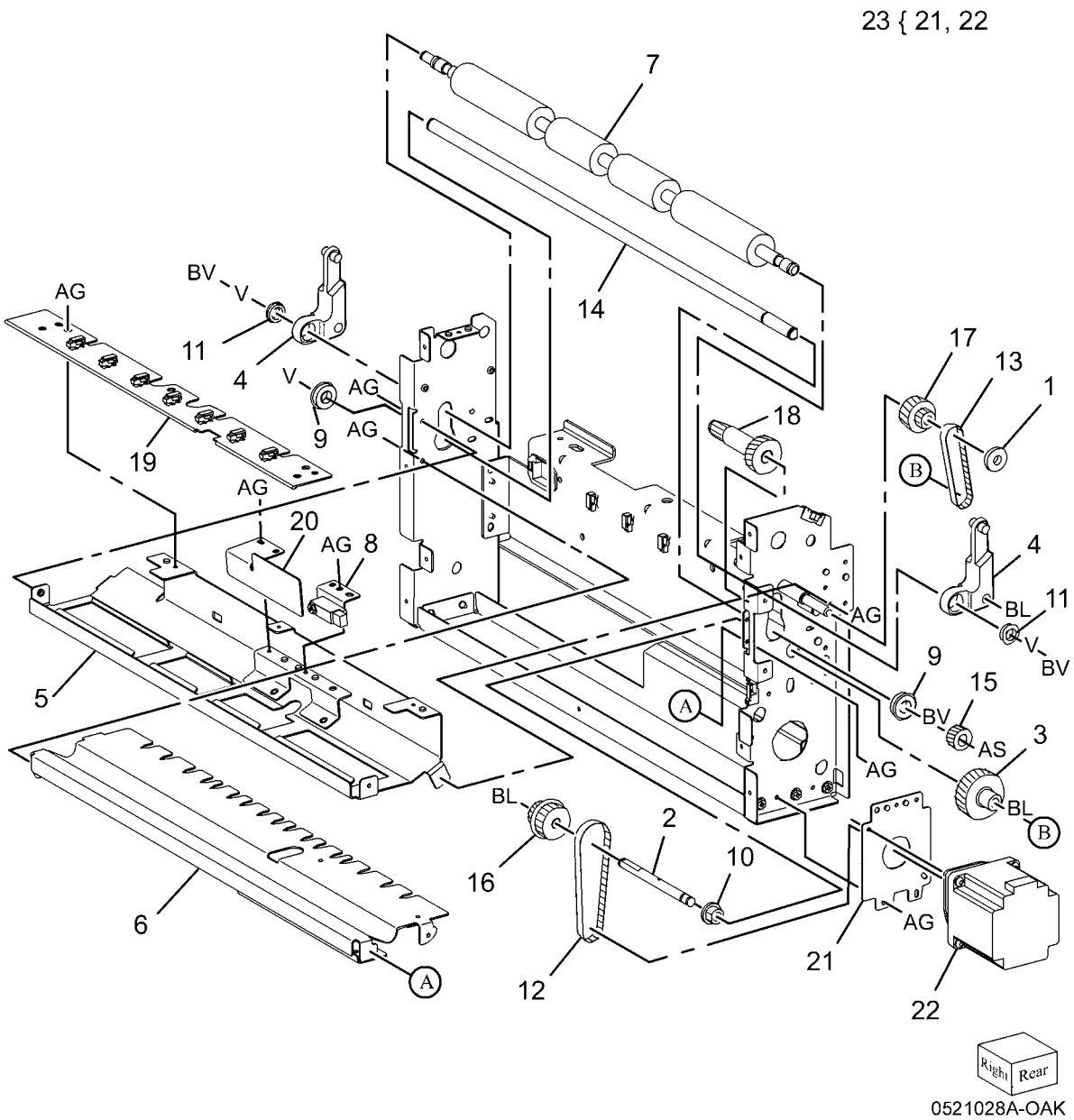

PL 22.1 Finisher Assembly (Part 1 of 2) (Integrated Office Finisher)

Item	Part	Description
1	848K36702	Front Cover Assembly
2	–	Front Cover (P/O PL 22.1 Item 1)
3	–	Bracket (P/O PL 22.1 Item 1)
4	–	Magnet (P/O PL 22.1 Item 1)
5	–	Label (P/O PL 22.1 Item 1)
6	848E50760	Front Inner Cover
7	068K29871	Hinge
8	068K29880	Hinge
9	848K38630	Top Cover Assembly
10	–	Top Cover (P/O PL 22.1 Item 9)
11	–	Bracket (P/O PL 22.1 Item 9)
12	–	Stopper (P/O PL 22.1 Item 9)
13	–	Magnet (P/O PL 22.1 Item 9)
14	848E50790	Rear Cover
15	–	Hinge (Not Spared)
16	815E60280	IIT Cover
17	042E92330	Eliminator

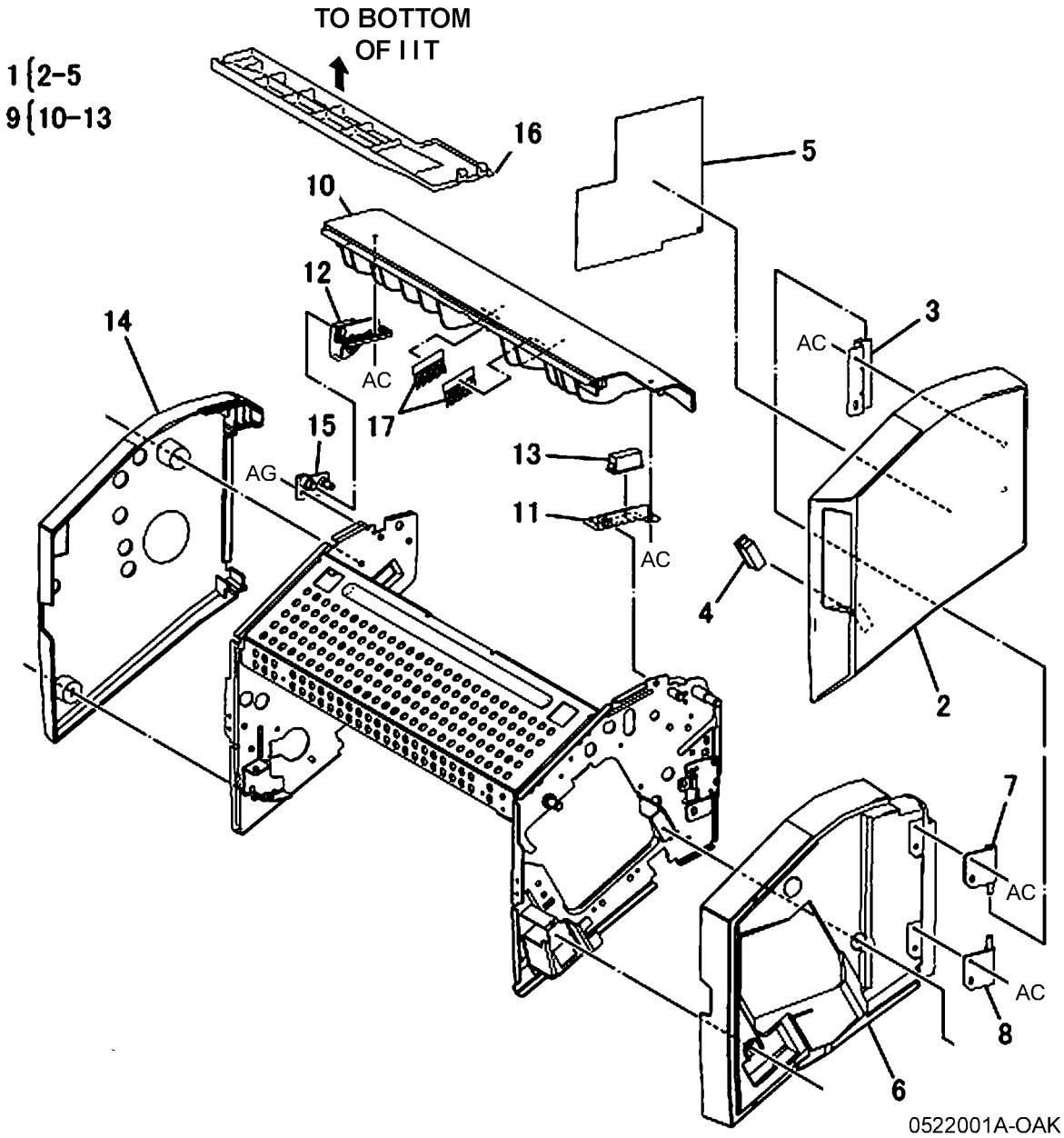

PL 22.2 Finisher Assembly (Part 2 of 2) (Integrated Office Finisher)

Item	Part	Description
1	–	Bottom Cover (Not Spared)
2	–	Spacer (Not Spared)
3	–	Tray Cover (Not Spared)
4	848E50770	Left Cover
5	068K69530	Tray Support
6	–	Rear Bracket (Not Spared)
7	962K42291	Wire Harness
8	050K64830	Stacker Tray Assembly (REP 22.16)
9	–	Stacker Base Assembly (Not Spared)
10	–	Extended Tray Assembly (Not Spared)
11	–	Screw (Not Spared)

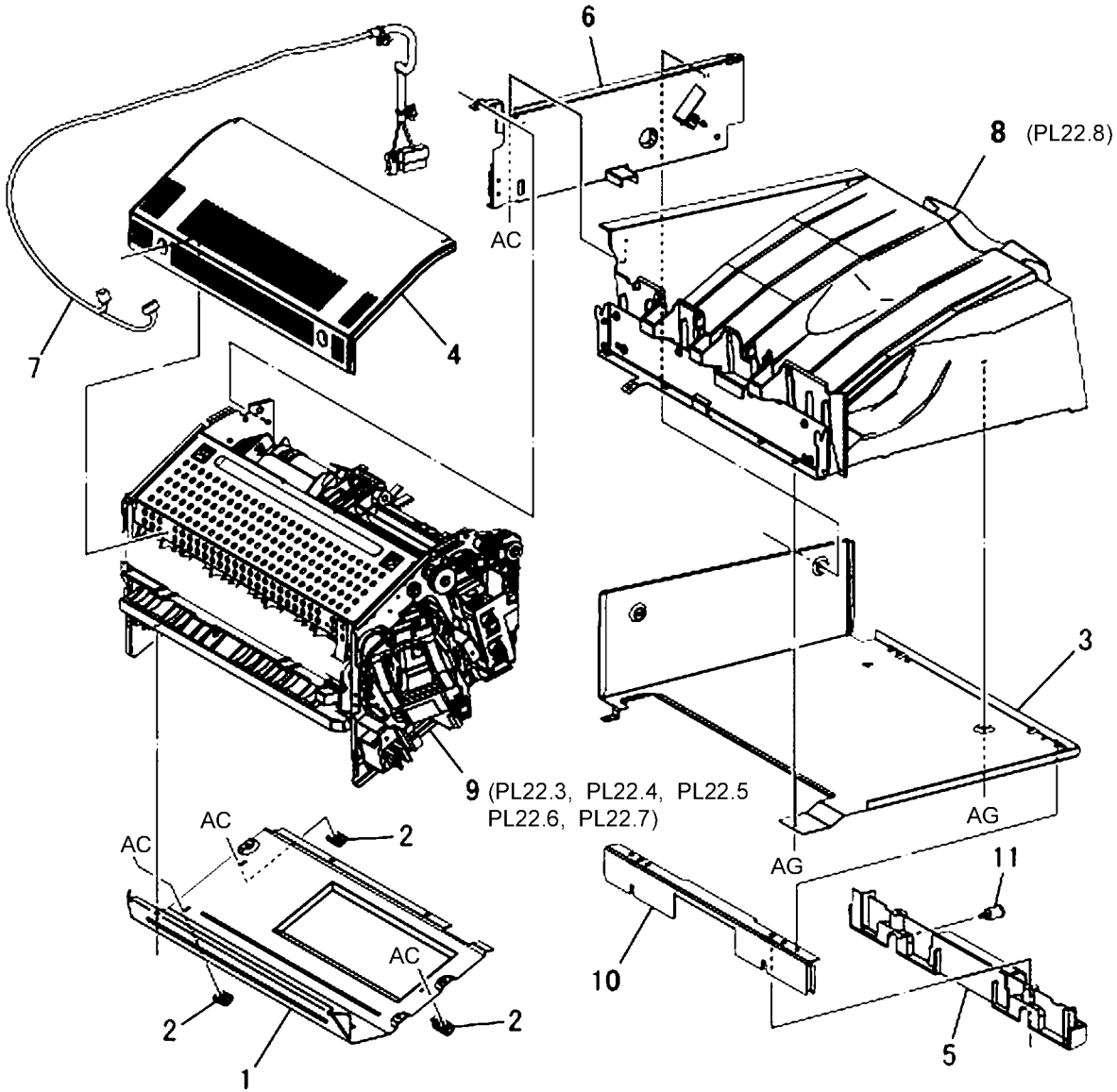

PL 22.3 Stacker Base Assembly (Part 1 of 5) (Integrated Office Finisher)

Item	Part	Description
1	003E65500	Knob
2	005E89470	Collar
3	423W10454	Belt
4	012K96370	Link Shaft Assembly
5	–	Link Shaft (P/O PL 22.3 Item 4)
6	012E16150	Support
7	–	Sub Paddle Shaft Assembly (P/O PL 22.3 Item 4)
8	–	Bearing (P/O PL 22.3 Item 4)
9	423W06054	Paddle Belt (REP 22.2)
10	413W75959	Bearing
11	020K13900	Pulley
12	005E89490	Collar
13	807E13260	Gear (21T)
14	120E27240	Actuator
15	802K85560	Knob Cover Assembly
16	–	Knob Cover (P/O PL 22.3 Item 15)
17	–	Spring (P/O PL 22.3 Item 15)
18	012K94990	Sub Paddle Solenoid Assembly
19	–	Bracket (Not Spared)
20	130K70160	Finisher Top Cover Interlock Sensor
21	110K12980	Finisher Top Cover Interlock (+24V)
22	–	Support (P/O PL 22.3 Item 18)
23	–	Cushion (P/O PL 22.3 Item 18)
24	–	Link (P/O PL 22.3 Item 18)
25	–	Arm (P/O PL 22.3 Item 18)
26	–	Bracket (P/O PL 22.3 Item 18)
27	121K34620	Sub Paddle Solenoid (REP 22.3)
28	–	Spring (P/O PL 22.3 Item 18)

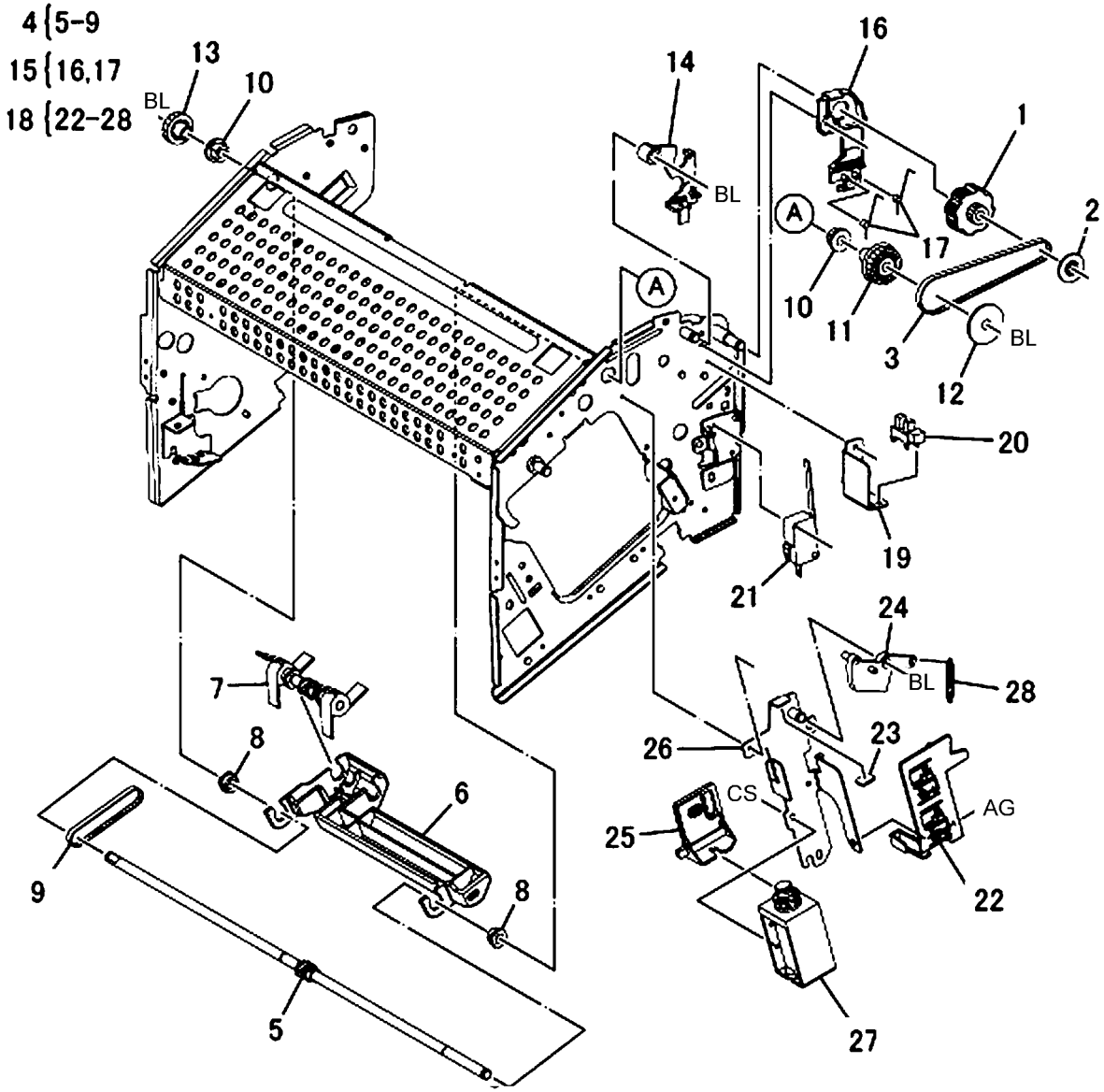

PL 22.4 Stacker Base Assembly (Part 2 of 5) (Integrated Office Finisher)

Item	Part	Description
1	–	Compile Assembly (REP 22.20)
2	029K92350	Staple Assembly (REP 22.5)
3	–	Cartridge (P/O PL 22.4 Item 2)
4	–	Stapler (P/O PL 22.4 Item 2)
5	–	Bracket (Not Spared)
6	–	Support (Not Spared)
7	930W00111	Set Clamp Home Sensor (REP 22.6)
8	962K44980	Wire Harness
9	022K72790	Exit Roll Assembly (REP 22.7)
10	–	Exit Roll (P/O PL 22.4 Item 9)
11	004E15340	Damper
12	004E15330	Center Damper
13	–	Bearing (Not Spared)
14	007K94220	One Way Gear
15	005E89470	Collar
16	807E13230	Gear Pulley (16T/18T)
17	127K49800	Finisher Transport Motor
18	423W06954	Belt

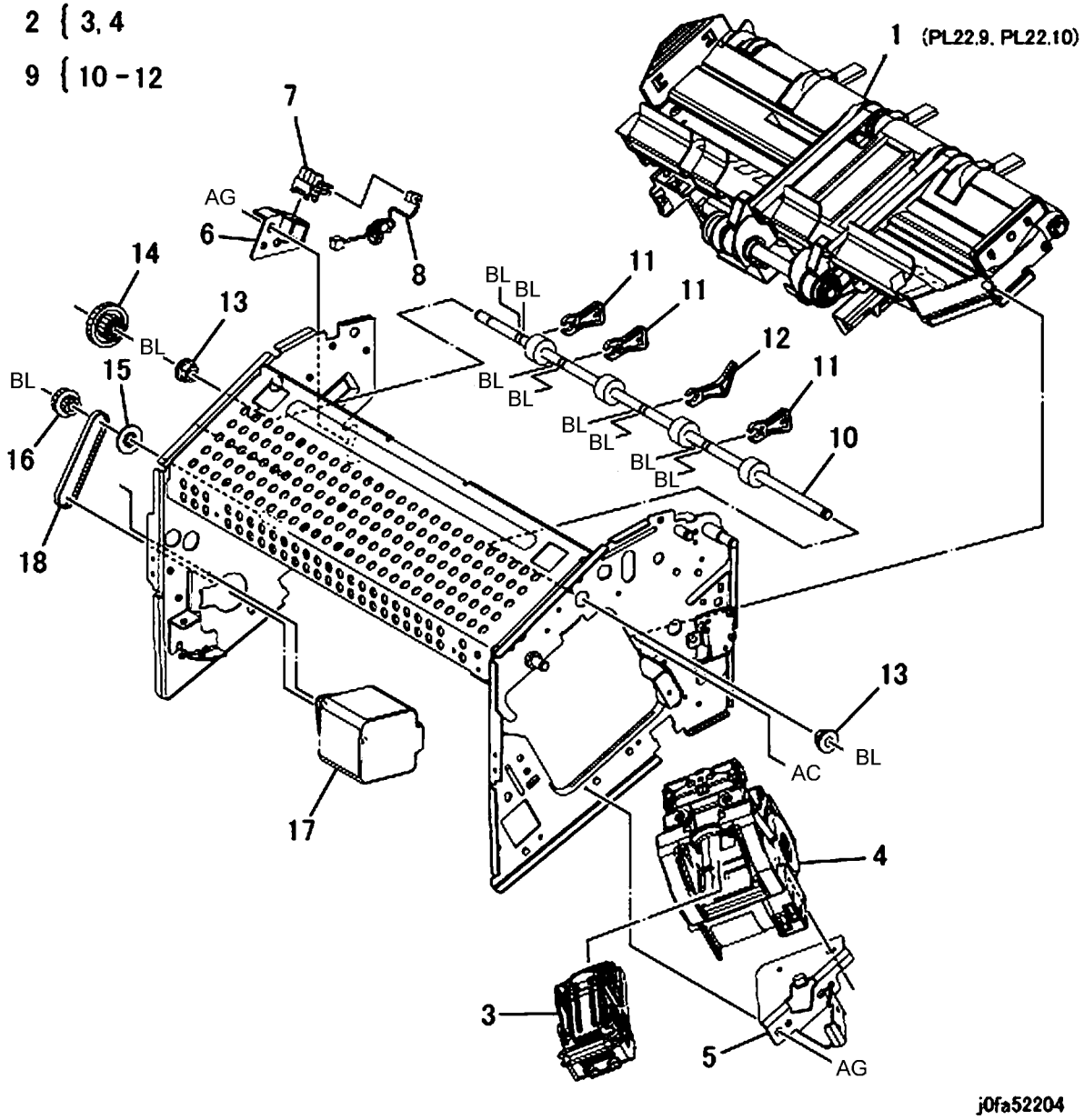

PL 22.5 Stacker Base Assembly (Part 3 of 5) (Integrated Office Finisher)

Item	Part	Description
1	807E13250	Gear Pulley (37T/45T)
2	005E89480	Collar
3	413W75959	Bearing
4	006K25001	Main Paddle Shaft Assembly (REP 22.11)
5	423W09854	Belt
6	–	Shaft (Not Spared)
7	413W11860	Bearing
8	020E43500	Pulley (19T)
9	054K30361	Lower Chute Assembly (REP 22.12)
10	–	Lower Chute (P/O PL 22.5 Item 9)
11	022K73190	Pinch Roll (REP 22.8)
12	809E65931	Spring
13	–	Support (Not Spared)
14	–	Bracket (Not Spared)
15	–	Bracket (Not Spared)
16	130K93251	Compile Exit Sensor (REP 22.10)
17	807E13240	Gear (27T)
18	–	Bracket (Not Spared)
19	130K88190	Finisher Entrance Sensor (REP 22.9)

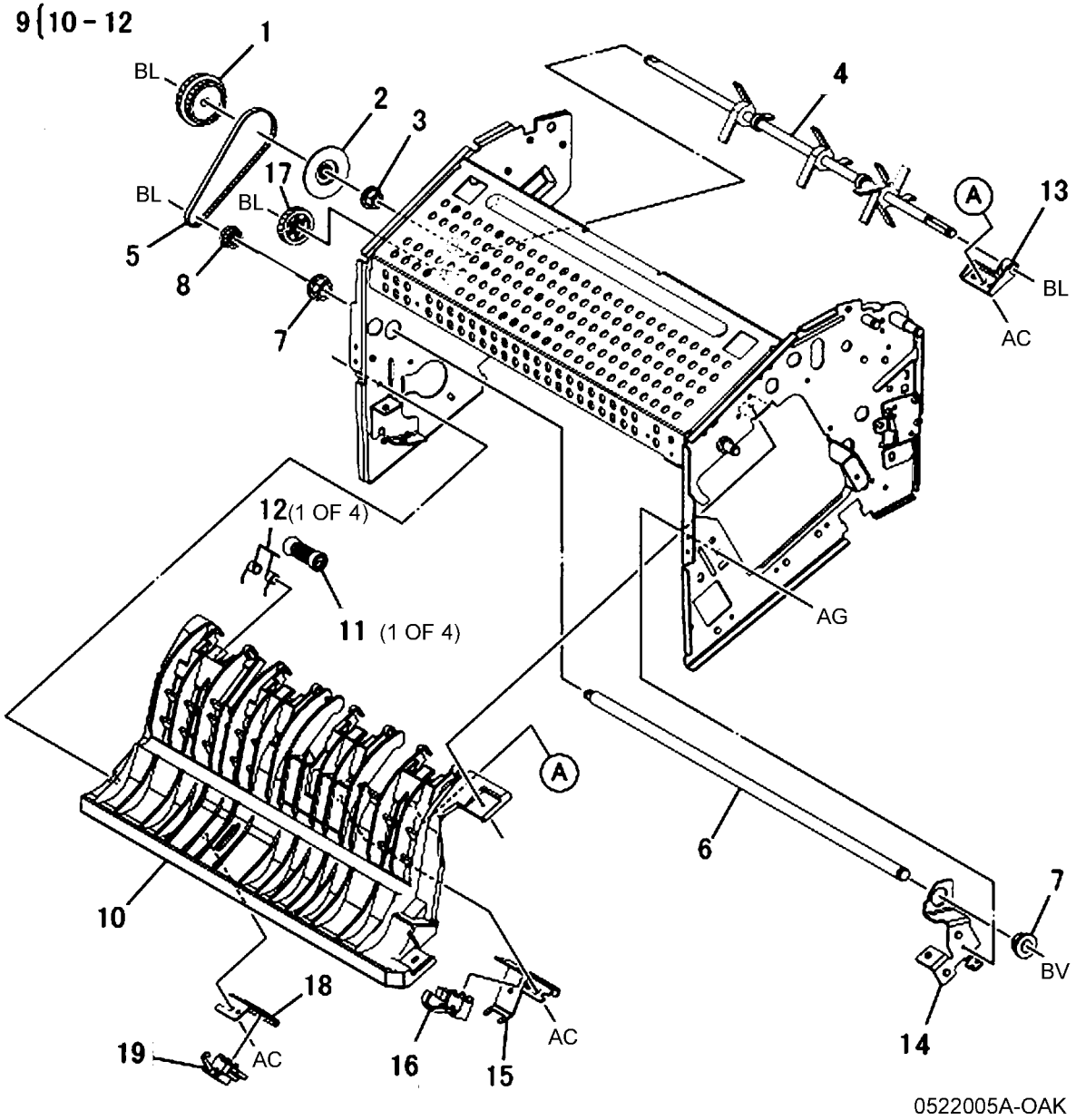

PL 22.6 Stacker Base Assembly (Part 4 of 5) (Integrated Office Finisher)

Item	Part	Description
1	068K29931	Bracket
2	068K29941	Bracket
3	054K42690	Upper Chute Assembly (REP 22.14)
4	–	Upper Chute (P/O PL 22.6 Item 3)
5	042E92241	Eliminator
6	022K72782	Entrance Roll Assembly (REP 22.13)
7	031E97041	Arm
8	031E97020	Arm
9	413W66250	Ball Bearing
10	–	Spring (Not Spared)
11	042E92330	Eliminator
12	–	Guide Paper (P/O PL 22.6 Item 3)

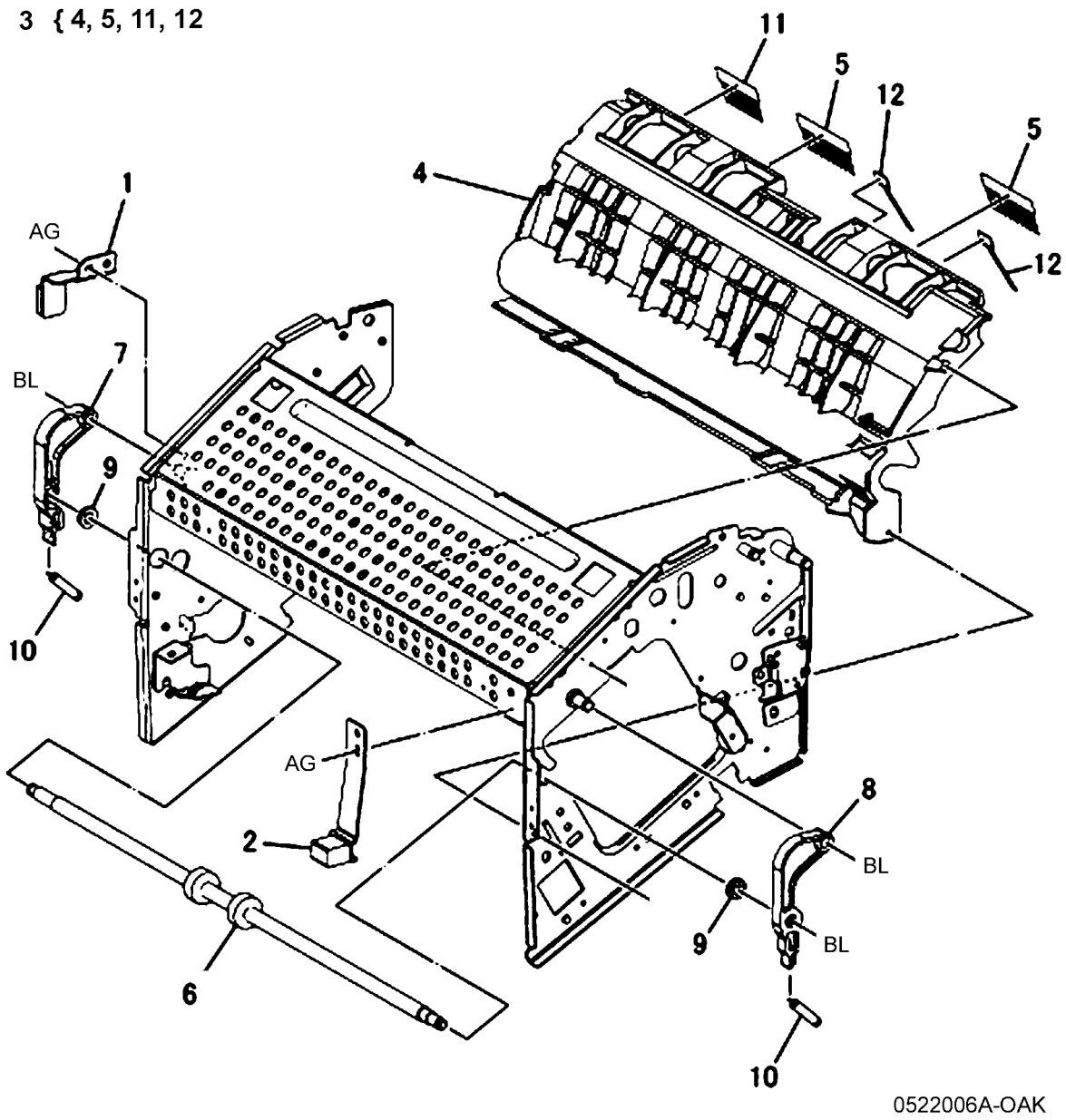

PL 22.7 Stacker Base Assembly (Part 5 of 5) (Integrated Office Finisher)

Item	Part	Description
1	960K50450	Finisher PWB (REP 22.15)
2	055K30850	Connector Bracket
3	–	Harness Guide (Not Spared)
4	–	PWB Bracket (Not Spared)
5	–	Wire Harness (Drive) (Not Spared)
6	–	Wire Harness (Stapler) (Not Spared)
7	–	Wire Harness (Interlock) (Not Spared)
8	–	Wire Harness (Front Sensor) (Not Spared)
9	–	Wire Harness (Compile) (Not Spared)
10	–	Wire Harness (Stacker) (Not Spared)
11	–	Bracket (Not Spared)
12	110E97990	Finisher Front Interlock Switch

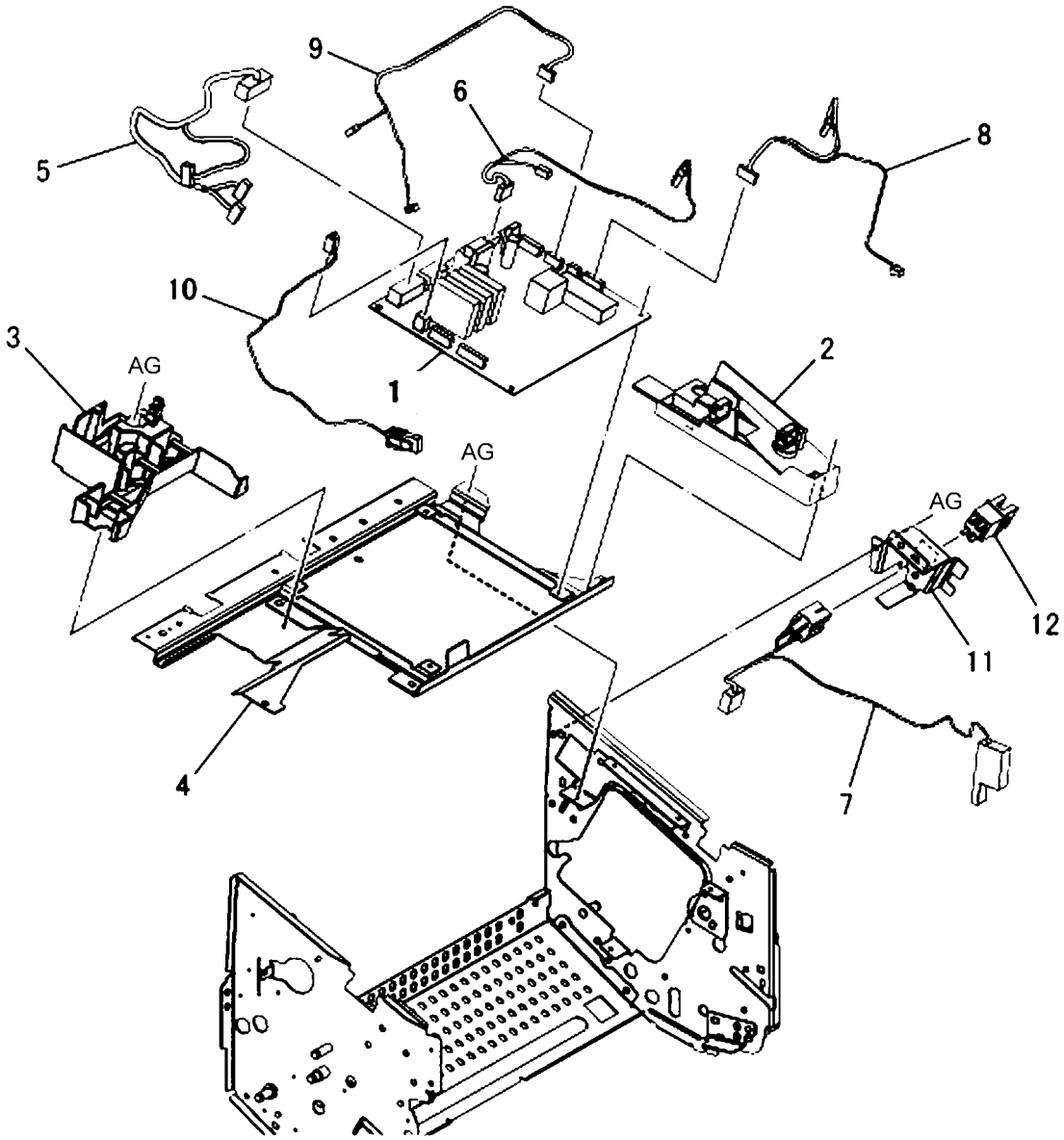

0522007A-OAK

PL 22.8 Stacker Tray Assembly (Integrated Office Finisher)

Item	Part	Description
1	–	Bearing (P/O PL 22.2 Item 8)
2	–	Top Tray (P/O PL 22.2 Item 8)
3	–	Bracket (P/O PL 22.2 Item 8)
4	–	Plate (P/O PL 22.2 Item 8)
5	–	Bracket (P/O PL 22.2 Item 8)
6	–	Base Tray (P/O PL 22.2 Item 8)
7	–	Base Bracket (P/O PL 22.2 Item 8)
8	006K25031	Stacker Shaft Assembly (REP 22.17)
9	127K49420	Stacker Motor (REP 22.18)
10	–	Pulley (60T) (P/O PL 22.2 Item 8)
11	–	Worm Gear (P/O PL 22.2 Item 8)
12	–	Gear (16T/32T) (P/O PL 22.2 Item 8)
13	–	Stud (P/O PL 22.2 Item 8)
14	–	Bracket (P/O PL 22.2 Item 8)
15	–	Bearing (P/O PL 22.2 Item 8)
16	423W07354	Belt (P/O PL 22.2 Item 8)
17	–	Bracket (P/O PL 22.2 Item 8)
18	930W00111	Stacker Sensor 1 (Q1), Sensor 2 (Q2) (REP 22.19)
19	–	Actuator (P/O PL 22.2 Item 8)
20	–	Wire Harness (P/O PL 22.2 Item 8)

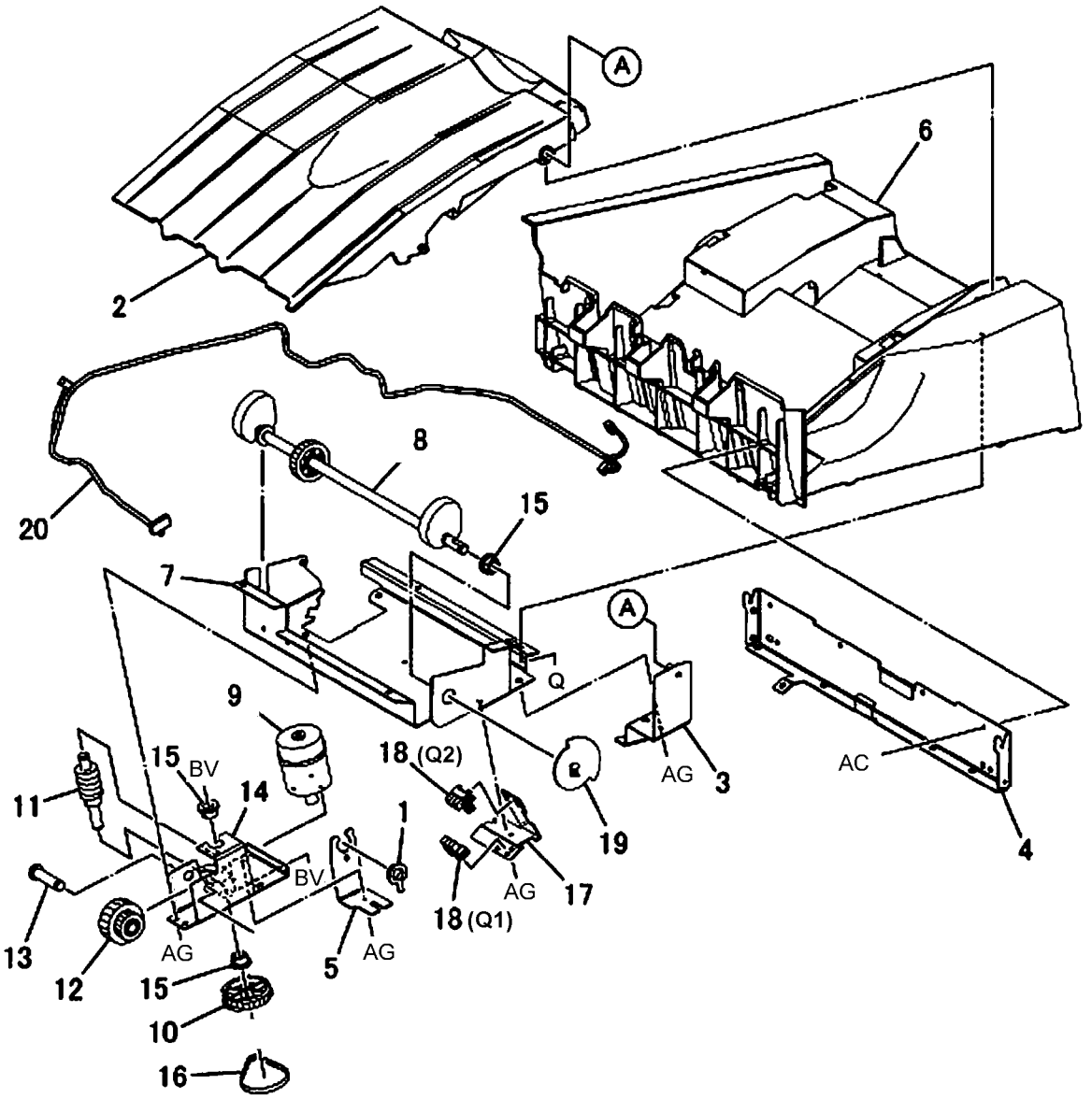

PL 22.9 Compile Assembly (Part 1 of 2) (Integrated Office Finisher)

Item	Part	Description
1	006K25010	Set Clamp Shaft (REP 22.21)
2	120E27220	Actuator
3	413W11860	Bearing
4	006K25020	Eject Shaft Assembly (REP 22.25)
5	–	Eject Shaft (P/O PL 22.9 Item 4)
6	–	Spacer (P/O PL 22.9 Item 4)
7	–	Pulley (P/O PL 22.9 Item 4)
8	068K29830	Eject/Set Clamp Motor Assembly (REP 22.23)
9	930W00111	Rear Tamper Home Sensor (REP 22.24)
10	–	Support (Not Spared)
11	423W26754	Belt
12	–	Belt (Not Spared)
13	023K91530	Eject Belt (REP 22.22)
14	–	Spring (P/O PL 22.9 Item 8)
15	–	Eject Motor, Set Clamp Motor (P/O PL 22.9 Item 8)
16	–	Bracket (P/O PL 22.9 Item 8)

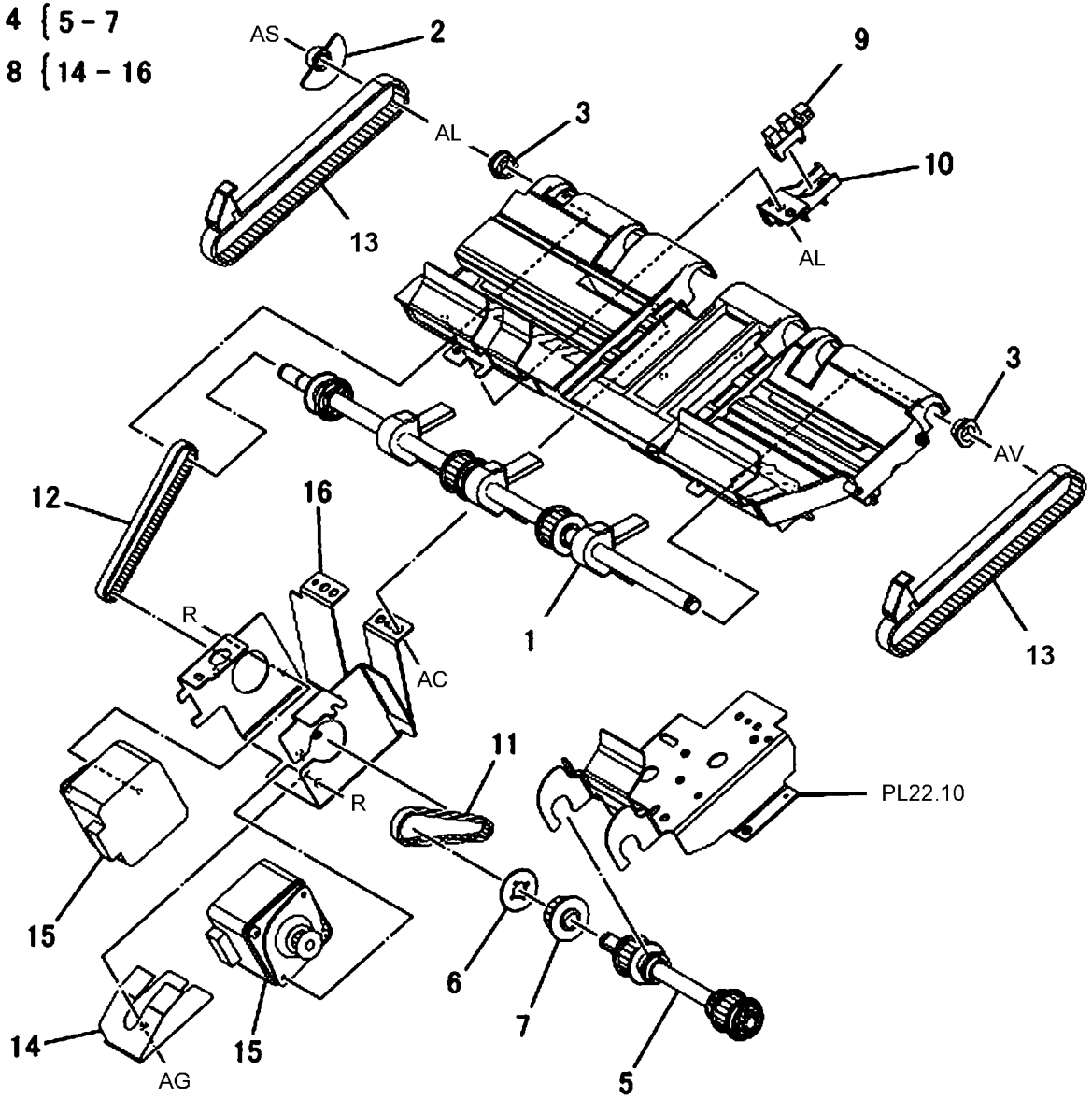

0522009A-OAK

PL 22.10 Compile Assembly (Part 2 of 2) (Integrated Office Finisher)

Item	Part	Description
1	068K30510	Bracket Assembly
2	–	Bracket (P/O PL 22.10 Item 1)
3	–	Wire Harness (P/O PL 22.10 Item 1)
4	050E25900	Compile Tray
5	–	Support (Not Spared)
6	930W00111	Front Tamper Home Sensor (REP 22.27)
7	038E34860	Paper Guide
8	–	Bracket (Not Spared)
9	–	Stack Height Sensor (REP 22.29)
–	930W00212	Eject Clamp Home Sensor (REP 22.28)
10	962K42270	Wire Harness
11	–	Bracket (Not Spared)
12	–	Wire Harness (Not Spared)
13	038K88990	Tamper Guide, Rear
14	068K30740	Front/Rear Tamper Motor Assembly (REP 22.26)
15	–	Front/Rear Tamper Motor (P/O PL 22.10 Item 14)
16	–	Bracket (P/O PL 22.10 Item 14)
17	001E70981	Rail
18	038K89260	Tamper Guide, Front

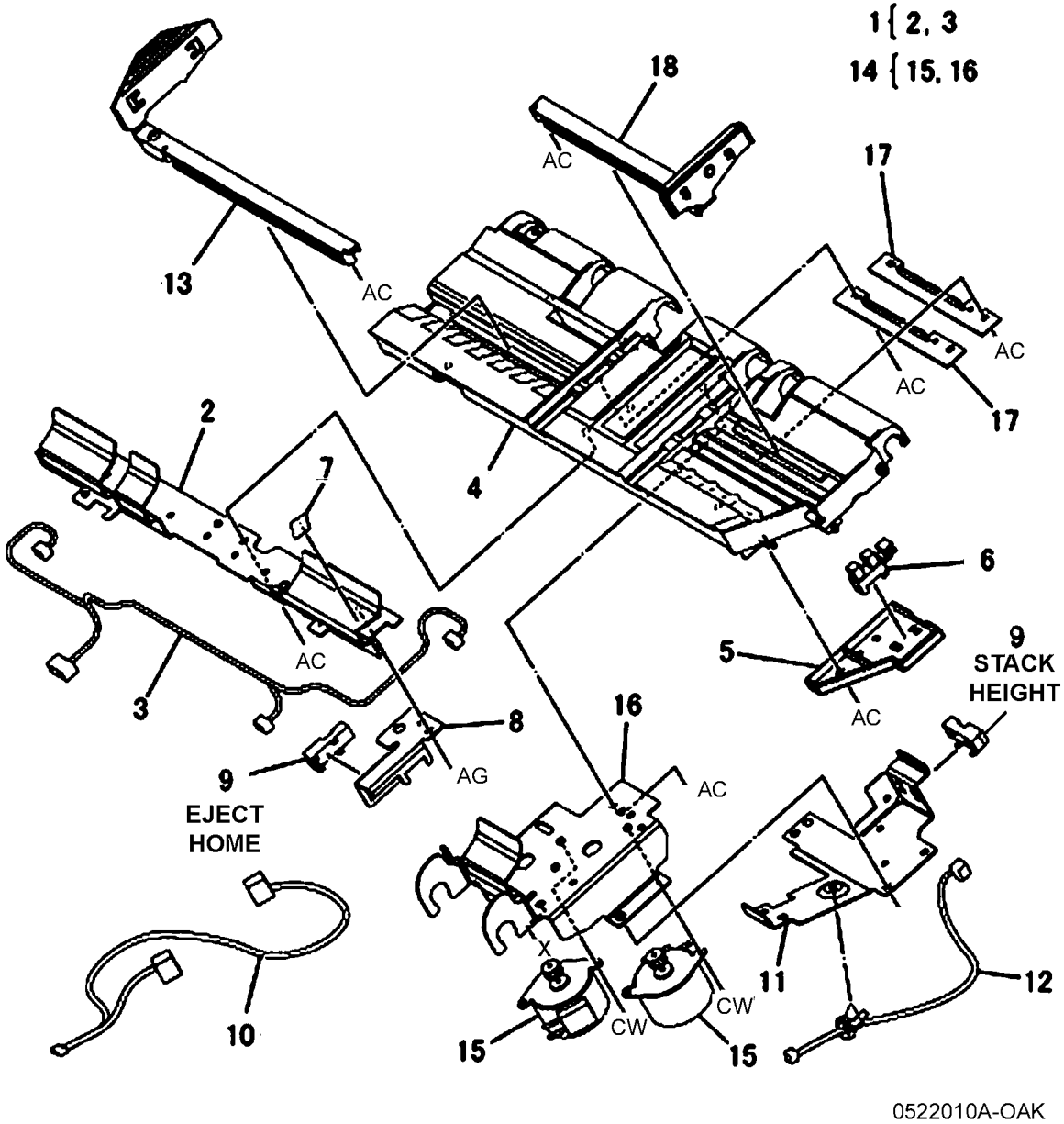

PL 23.1 H-Transport Assembly (1 of 5) (Office Finisher LX)

Item	Part	Description
1	059K65560	H-Transport Assembly (REP 23.1)
2	068K59494	Docking Plate Assembly
3	–	Docking Plate (P/O PL 23.1 Item 2)
4	–	Side Guide (P/O PL 23.1 Item 2)
5	–	Center Guide (P/O PL 23.1 Item 2)
6	826E07210	Thumb Screw
7	868E51550	Bracket
8	–	Finisher Plate
9	–	Finisher LX Assembly (Not Spared)
10	–	HTU Spacer (Not Spared)

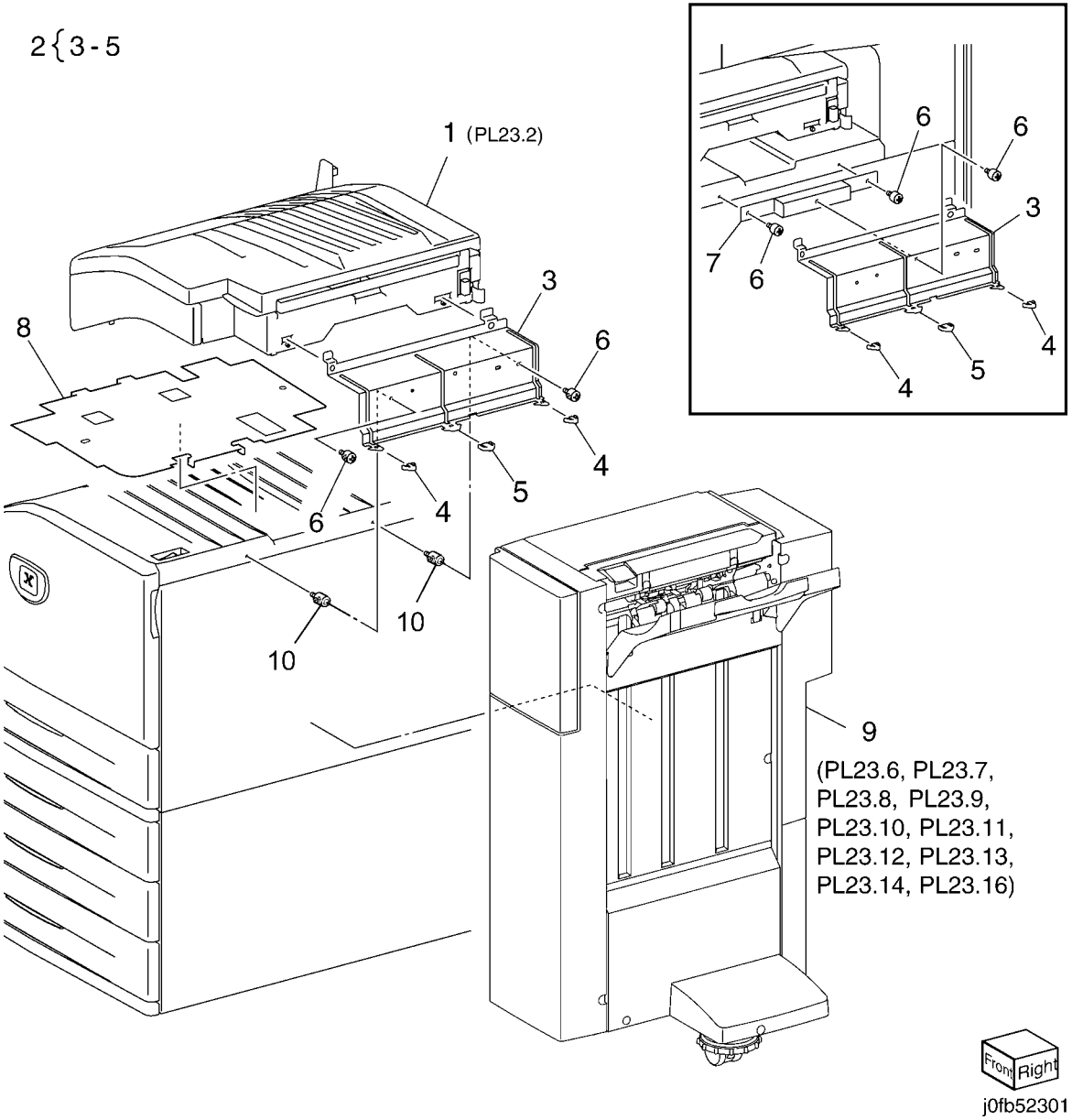

PL 23.2 H - Transport Assembly (2 of 5) (Office Finisher LX)

Item	Part	Description
1	848K34182	Left Cover Assembly
2	848E43672	Left Cover
3	–	Paper Guide (P/O PL 23.2 Item 1)
4	848K34170	Top Cover Assembly
5	–	Lower Chute Assembly (P/O PL 23.1 Item 1)
6	–	Lower Chute Assembly (P/O PL 23.2 Item 5)
7	054K35264	Chute Assembly
8	026K81200	Thumb Screw
9	–	Rear Cover (Not Spared)
10	180K00391	Punch Assembly (2/3 Hole) (REP 23.2)
–	180K00401	Punch Assembly (2/4 Hole) (REP 23.2)
11	–	Punch Box (Not Spared)
12	–	Wire Harness (Not Spared)
13	848E28010	Connector Cover

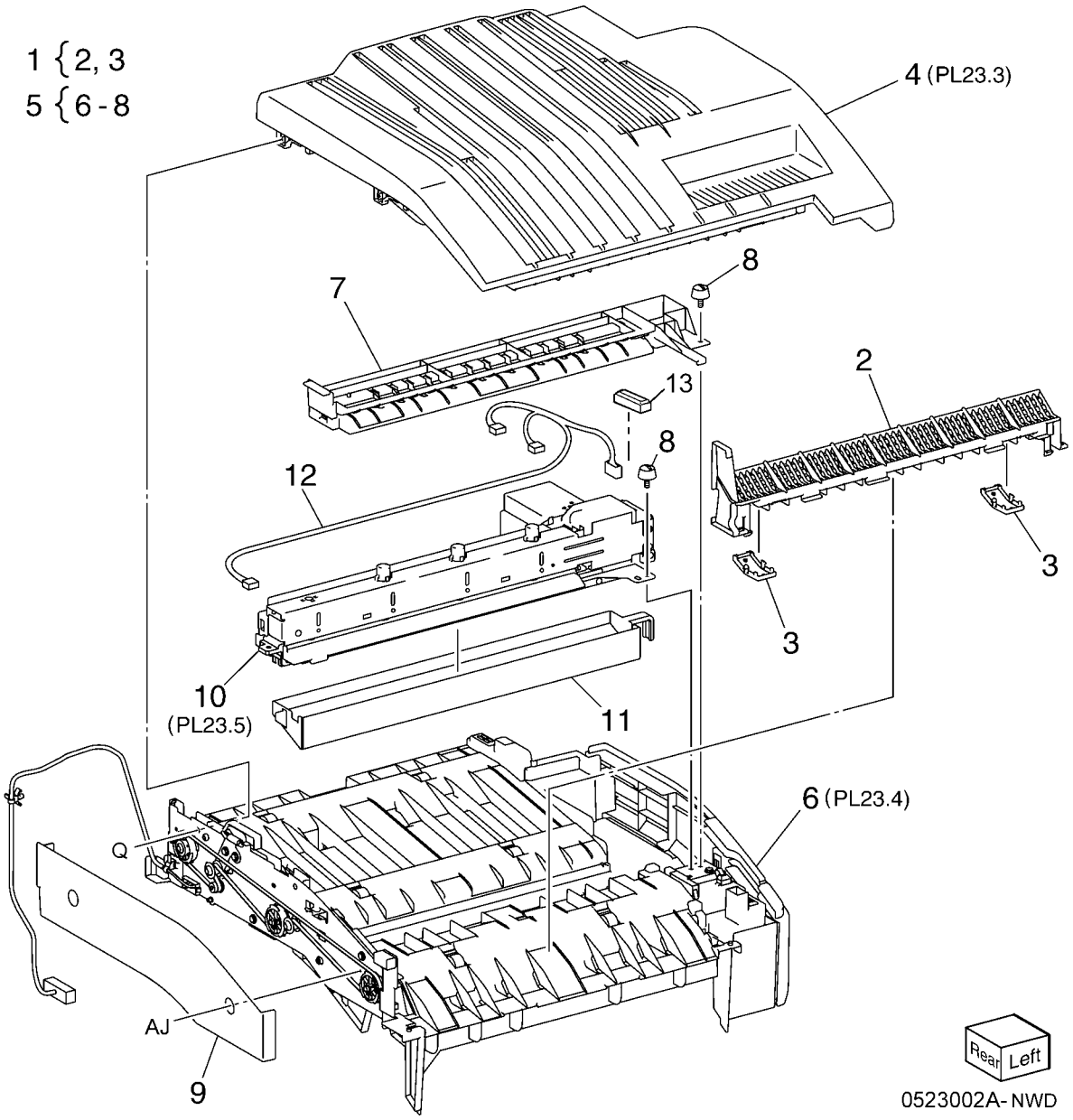

PL 23.3 H - Transport Assembly (3 of 5) (Office Finisher LX)

Item	Part	Description
1	–	Bracket (P/O PL 23.2 Item 4)
2	054K35239	Left Chute Assembly
3	–	Left Chute (P/O PL 23.3 Item 2)
4	–	Pinch Spring (P/O PL 23.3 Item 2)
5	–	Pinch Roller (P/O PL 23.3 Item 2)
6	054K35245	Right Chute Assembly
7	–	Right Chute (P/O PL 23.3 Item 6)
8	022E27660	Pinch Roller
9	809E76211	Pinch Spring
10	848E43662	Top Cover
11	003K15985	H - Transport Counter Balance (Left)
12	–	H - Transport Counter Balance (Right) (P/O PL 23.2 Item 4)
13	809E76240	Spring
14	809E78940	Spring

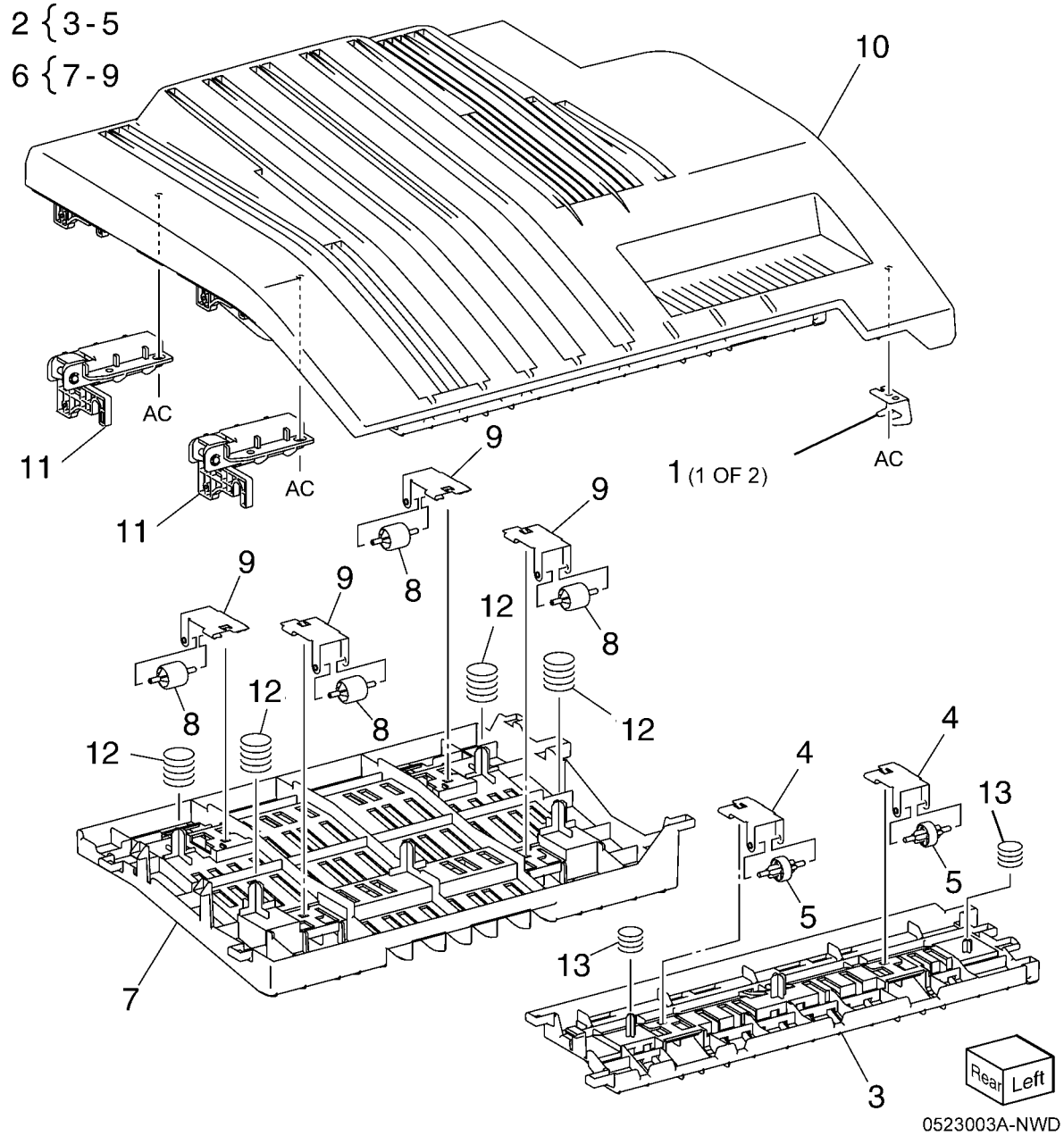

PL 23.4 H - Transport Assembly (4 of 5) (Office Finisher LX)

Item	Part	Description
1	–	Lower Chute (P/O PL 23.2 Item 6)
2	–	Magnet (P/O PL 23.2 Item 6)
3	130E81600	H - Transport Open Sensor
4	868E15540	Sensor Bracket
5	809E81720	Actuator
6	930W00211	H - Transport Entrance Sensor
7	848K34192	H - Transport Front Cover Assembly
8	848E43641	H - Transport Front Cover
9	921W41142	Gasket
10	803E04690	Hinge
11	–	Bracket (P/O PL 23.2 Item 6)
12	–	Rear Frame Assembly (P/O PL 23.2 Item 6)
13	127K57622	H - Transport Motor (REP 23.4)
14	020E45330	Tension Pulley
15	020K15720	Pulley (43T)
16	020E45210	Pulley (43T)
17	–	Tension Bracket (P/O PL 23.2 Item 6)
18	809E78950	Spring Tension
19	059K54480	Drive Roll
20	059K55070	Drive Roll
21	013E33140	Bearing
22	423W01154	H - Transport Belt (REP 23.3)
23	413W14660	Sleeve Bearing
24	962K60422	Wire Harness
25	127E85570	Fan Blade
26	016E97311	Pinch Bushing
27	–	Lower Hinge (P/O PL 23.4 Item 7)
28	848E43630	Front Cover
29	848E43651	Switch Cover
30	–	Cover (Not Spared)
31	–	Bracket (Not Spared)
32	004E18112	Pinch Cushion
33	921W41162	Gasket

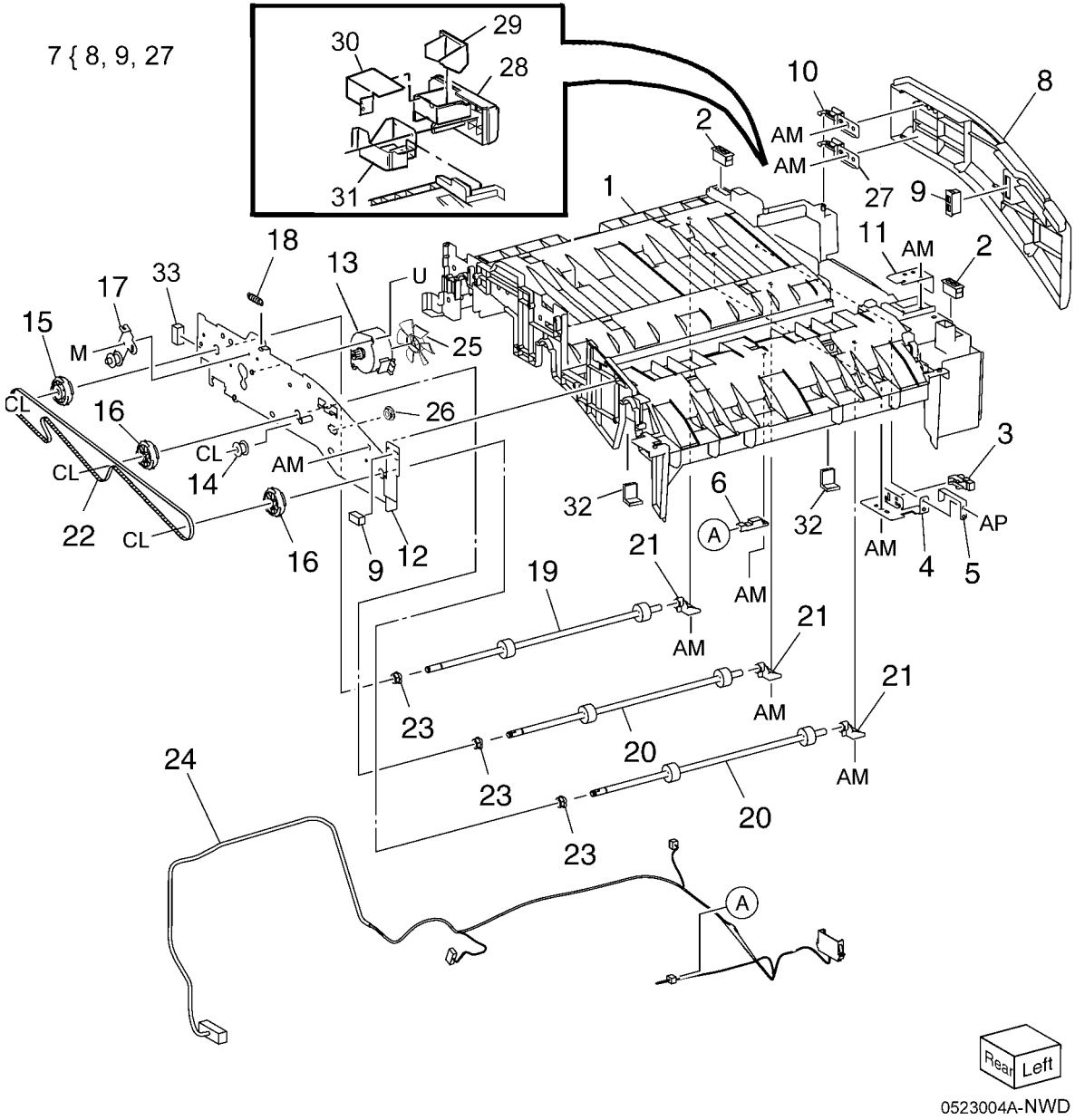

PL 23.5 H - Transport Assembly (5 of 5) (Office Finisher LX)

Item	Part	Description
1	–	Punch Motor (P/O PL 23.2 Item 10)
2	–	Punch Lower Cover (P/O PL 23.2 Item 10)
3	–	Punch Motor Cover (P/O PL 23.2 Item 10)
4	–	Sensor Bracket (P/O PL 23.2 Item 10)
5	930W00111	Punch Encoder Sensor, Punch Home Sensor, Punch Box Set Sensor
6	–	Punch Frame Assembly (P/O PL 23.2 Item 10)
7	–	Encoder/Gear Assembly (P/O PL 23.2 Item 10)
8	–	Gear (P/O PL 23.2 Item 10)
9	–	Motor Bracket (P/O PL 23.2 Item 10)
10	–	Punch Top Cover (P/O PL 23.2 Item 10)
11	–	Bracket (P/O PL 23.2 Item 10)

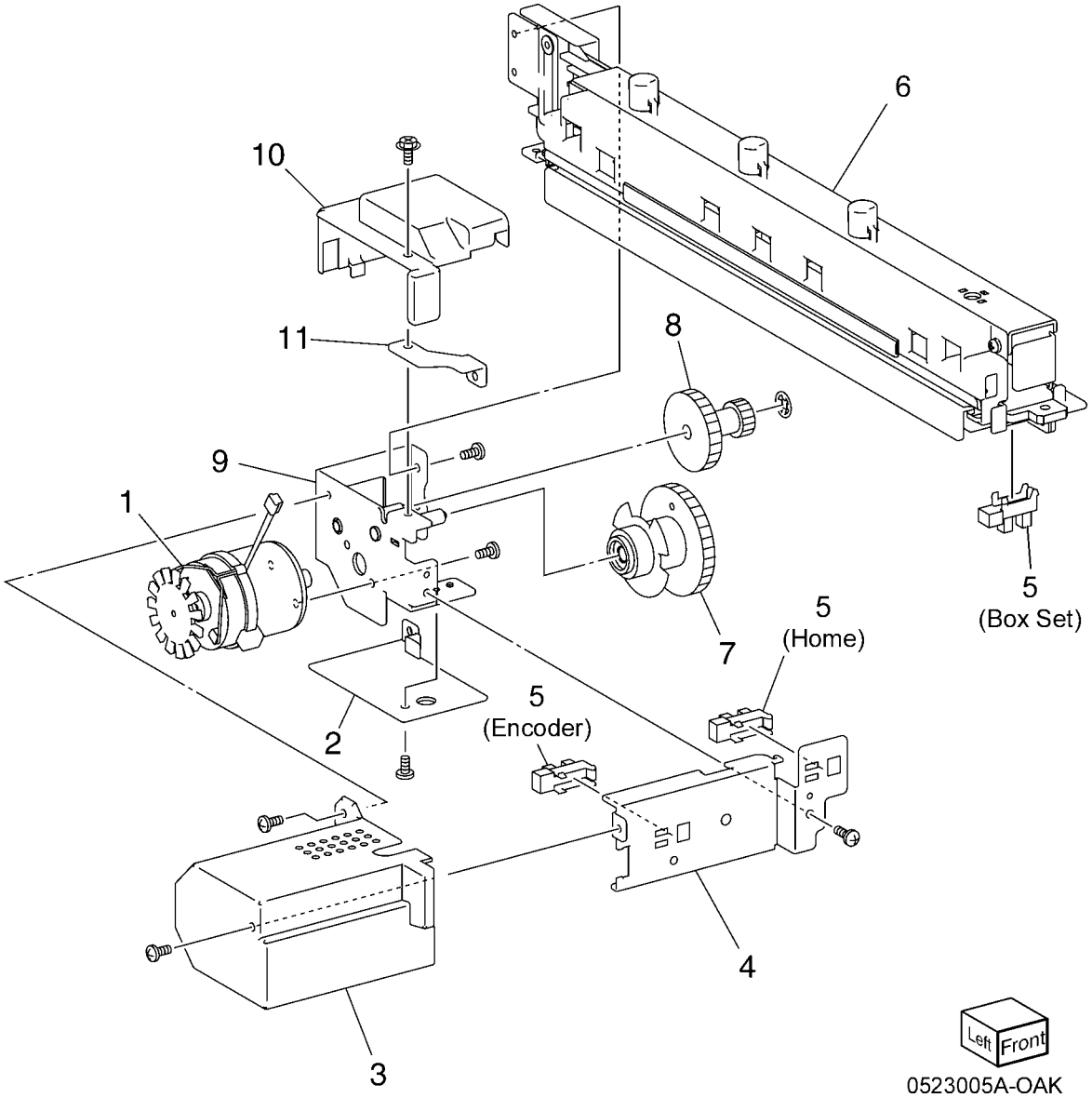

PL 23.6 Finisher Covers (Office Finisher LX)

Item	Part	Description
1	–	Plate (Not Spared)
2	–	Lower Plate (Not Spared)
3	–	Docking Lever (Not Spared)
4	–	Front Cover (REP 23.6)
5	–	Front Door (Not Spared)
6	–	Bracket (Not Spared)
7	068K59531	Hinge
8	848E15210	Rear Lower Cover (REP 23.8)
9	848E15221	Rear Upper Cover (REP 23.7)
10	848E15231	Connector Cover
11	848E15241	Stacker Lower Cover (REP 23.11)
12	848E48791	LH Cover
13	–	Cover (Not Spared)
14	–	Spring (Not Spared)
15	848E22450	Foot Cover (REP 23.10)
16	801K30701	Booklet Assembly (REP 23.31)
17	826E31870	Thumb Screw
18	–	Upper Adjust Cover (Not Spared)
19	–	Lower Adjust Cover (Not Spared)
20	–	Base Frame Assembly (Not Spared)
21	921W41162	Gasket
22	–	Extension Spring (Not Spared)
23	–	Paper Guide

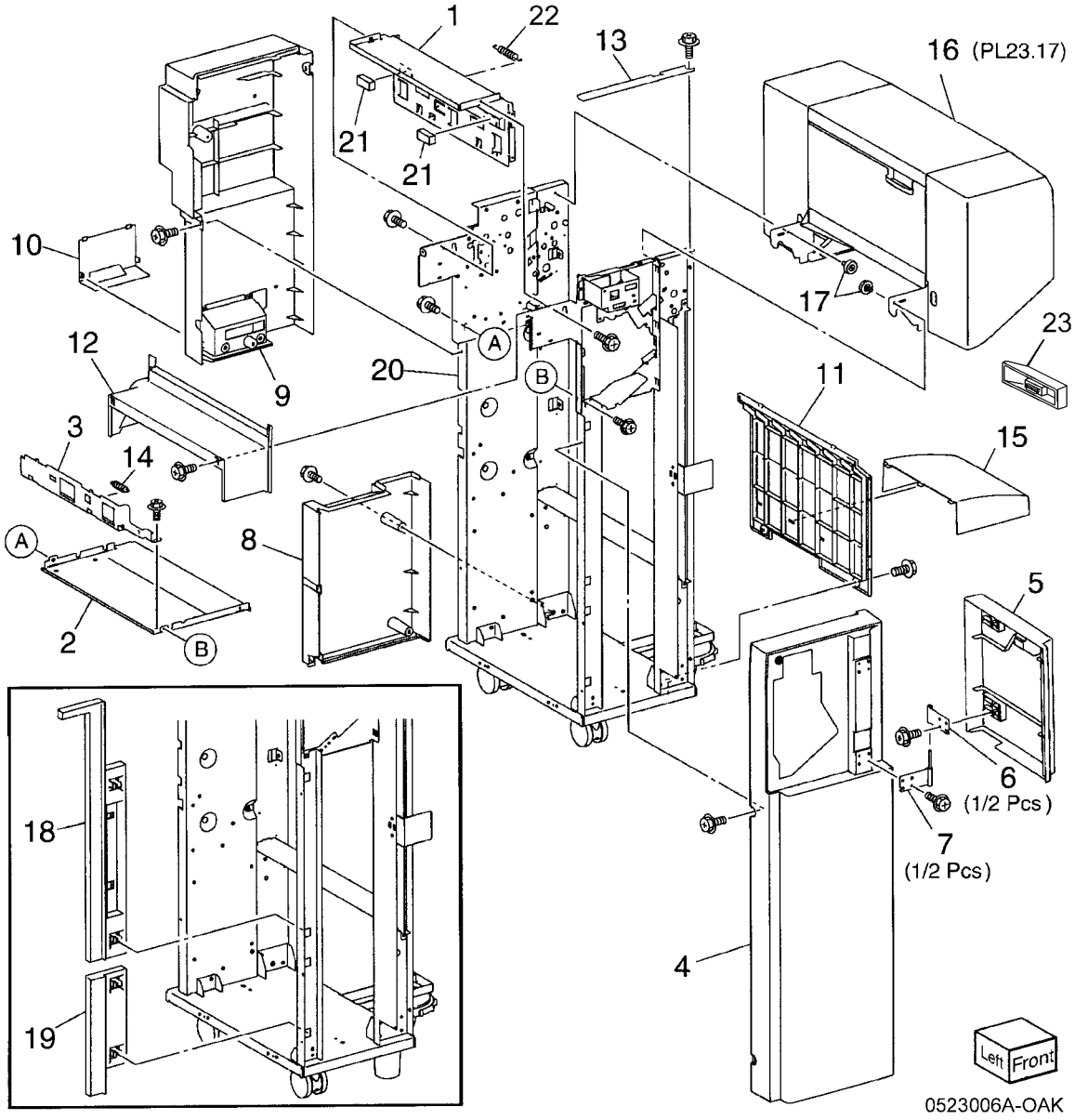

PL 23.7 Finisher Stacker (Office Finisher LX)

Item	Part	Description
1	041K95980	Front Carriage Assembly (REP 23.29)
2	–	Bearing (P/O PL 23.7 Item 1)
3	809E56850	Spring
4	–	Front Stacker Belt (P/O PL 23.7 Item 1)
5	–	Clamp (P/O PL 23.7 Item 1)
6	–	Front Carriage Assembly (P/O PL 23.7 Item 1)
7	041K95990	Rear Carriage Assembly (REP 23.29)
8	–	Bearing (P/O PL 23.7 Item 7)
9	–	Clamp (P/O PL 23.7 Item 7)
10	017K94890	Knob Caster Assembly
11	–	Rear Stacker Belt (P/O PL 23.7 Item 7)
12	–	Rear Carriage (P/O PL 23.7 Item 7)
13	–	Actuator (P/O PL 23.7 Item 7)
14	–	Carriage Tray (Not Spared)
15	050K61106	Stacker Tray (REP 23.20)
16	–	Shaft (Not Spared)
17	807E08990	Gear
18	020E37710	Pulley
19	146E90650	Encoder
20	809E56860	Spring
21	020E37720	Pulley (18T)
22	068K58304	Stacker Elevator Motor Assembly (REP 23.19)
23	–	Bearing (P/O PL 23.7 Item 22)
24	020E44181	Pulley (60T)
25	–	Gear (15T/37T) (P/O PL 23.7 Item 22)
26	–	Motor Bracket (P/O PL 23.7 Item 22)
27	–	Worm Shaft (P/O PL 23.7 Item 22)
28	423W27654	Belt
29	–	Stacker Elevator Motor (P/O PL 23.7 Item 22)
30	–	Stacker Encoder Sensor Assembly (Not Spared)
31	–	Bracket (P/O PL 23.7 Item 30)
32	930W00111	Stacker Encoder Sensor, Stacker No Paper Sensor
33	–	Stacker Upper Cover (Not Spared) (REP 23.12)
34	413W79359	Bearing
35	017K94880	Caster Assembly
36	251W31178	Washer
37	017K94900	Adjustable Foot Assembly

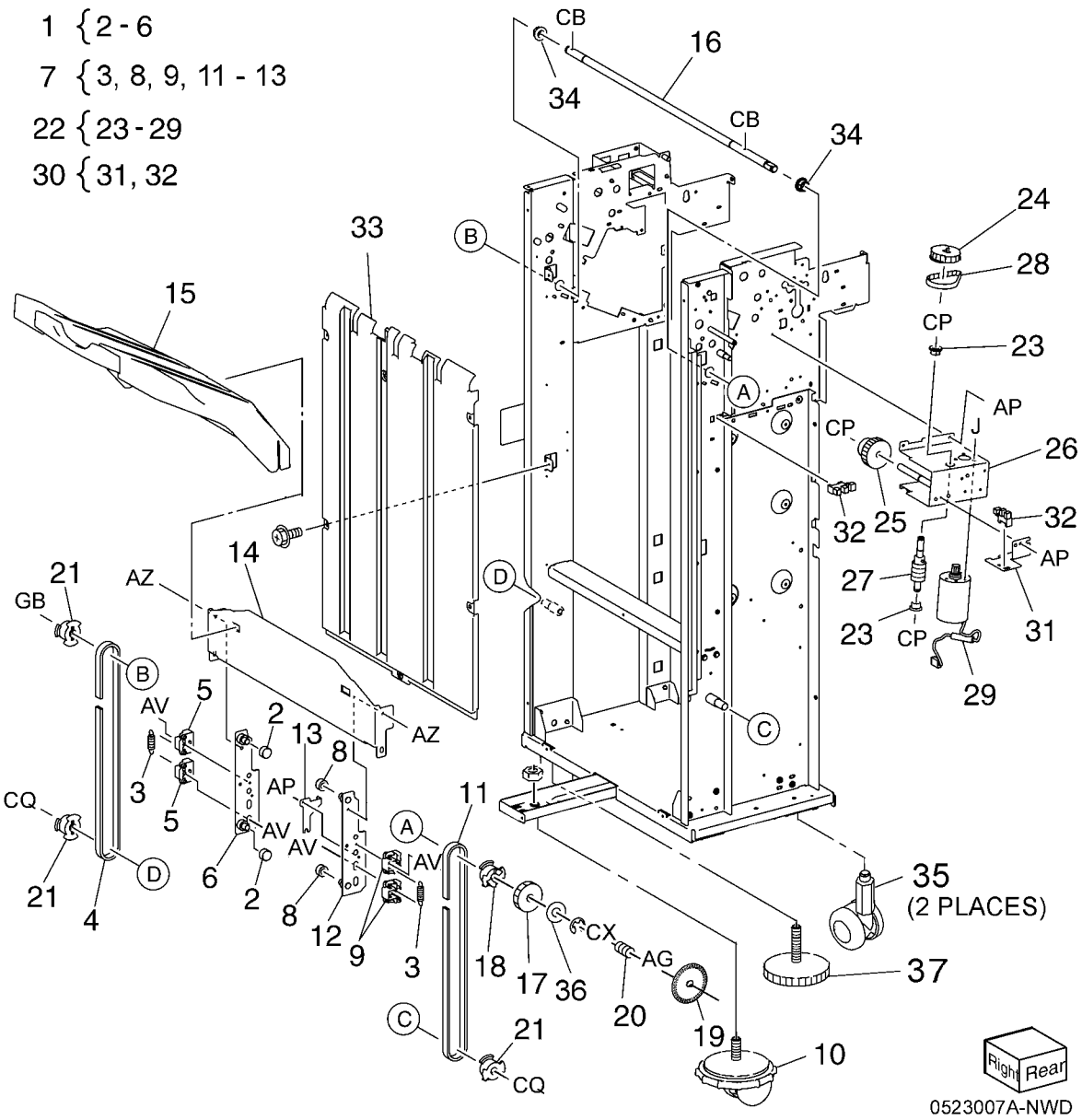

PL 23.8 Finisher Stapler (Office Finisher LX)

Item	Part	Description
1	–	Base Frame (P/O PL 23.8 Item 16)
2	–	Rail (P/O PL 23.8 Item 16)
3	–	Harness Guide
4	029K92350	Stapler Assembly (REP 23.16)
5	–	Holder (Not Spared)
6	–	Stapler Move Position Sensor Assembly (Not Spared)
7	–	Bracket (P/O PL 23.8 Item 6)
8	130E94940	Stapler Move Position Sensor
9	–	Stapler Move Motor Assembly (Not Spared)
10	–	Harness Guide (P/O PL 23.8 Item 16)
11	–	Harness Support Guide (P/O PL 23.8 Item 16)
12	–	Harness Guide (P/O PL 23.8 Item 16)
13	–	Stapler Cover (Not Spared)
14	–	Clamp (Not Spared)
15	–	Stapler Cartridge (Not Spared)
16	–	Stapler Unit (Not Spared)
17	–	Cable Band (Not Spared)
18	–	Harness Guide (Not Spared)
19	–	Stapler Motor Assembly (P/O PL 23.8 Item 9) (REP 23.15)
20	127K57622	Motor Assembly

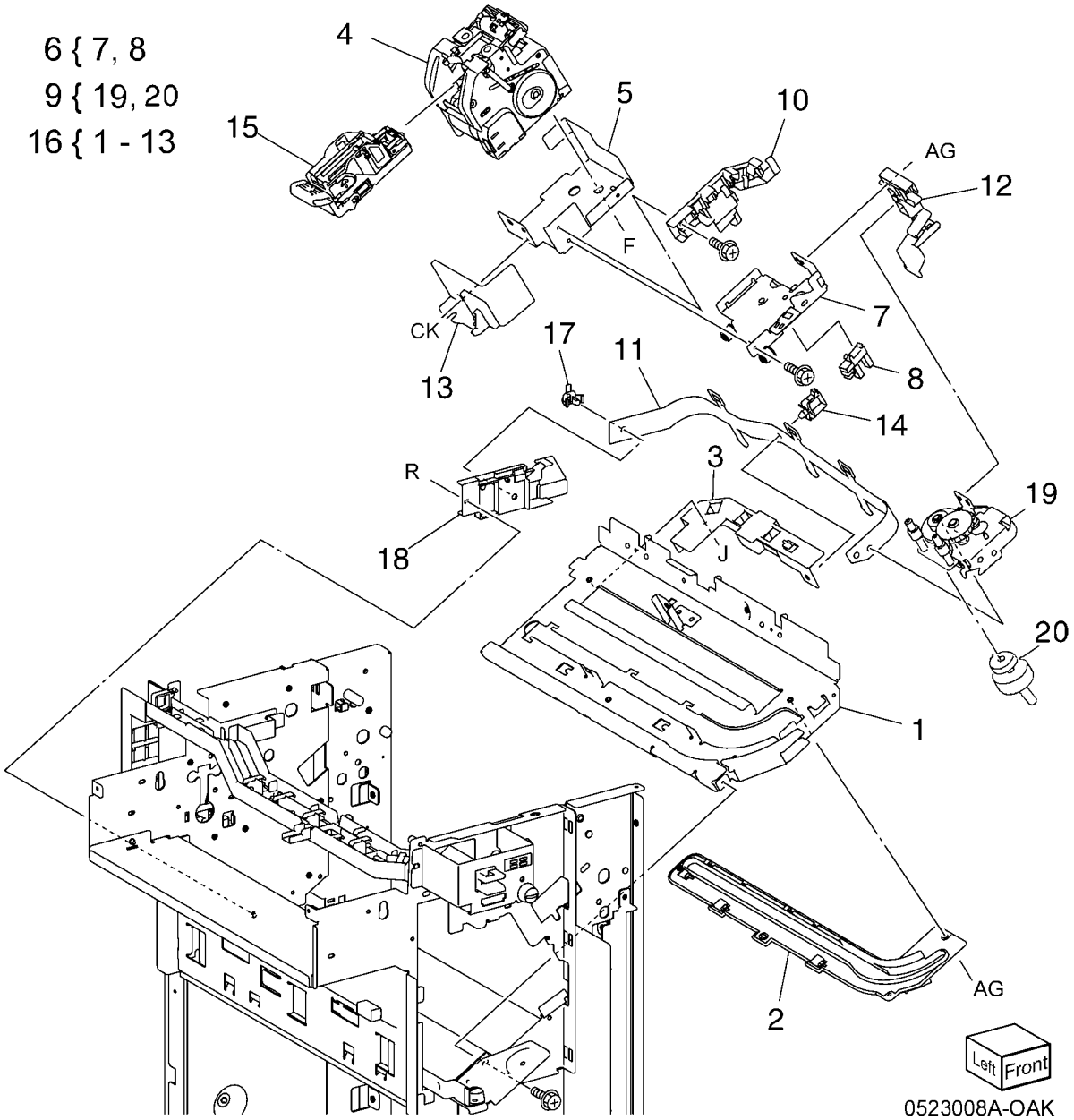

PL 23.9 Finisher Eject (1 of 5) (Office Finisher LX)

Item	Part	Description
1	–	Eject Cover Assembly (Not Spared)
2	–	Eject Assembly (Not Spared)
3	031K93790	Clamp Arm Assembly
4	807E21370	Gear (25T)
5	059K55111	Eject Roller
6	807E21380	Gear (72T)
7	807E21391	Gear (18T)
8	120E29772	Actuator
9	006K86731	Set Clamp Shaft Assembly
10	–	Spring (P/O PL 23.9 Item 9)
11	019K09391	Set Clamp Holder
12	–	Shaft (Not Spared)
13	809E79060	Spring
14	809E79080	Spring
15	006K86741	Guide Paper Shaft Assembly
16	–	Guide Paper Shaft (P/O PL 23.9 Item 15)
17	–	Gear (20T) (P/O PL 23.9 Item 15)
18	–	Shaft (Not Spared)
19	807E21420	Gear (19T)
20	807E21400	Gear (31T)
21	038E36490	Guide Paper (Left/Right)
22	005E25820	Clutch
23	807E21970	Gear (23T)
24	–	Stopper (Not Spared)
25	–	Bracket (Front) (Not Spared)
26	–	Bracket (Rear) (Not Spared)
27	–	Option Switch Assembly (Not Spared)
28	–	Bracket (Not Spared)
29	–	Option Switch (Not Spared)
30	413W11860	Sleeve Bearing
31	–	Bearing (Not Spared)
32	–	Clamp Arm (P/O PL 23.9 Item 3)
33	–	Roll (P/O PL 23.9 Item 3)
34	–	Shaft (P/O PL 23.9 Item 3)

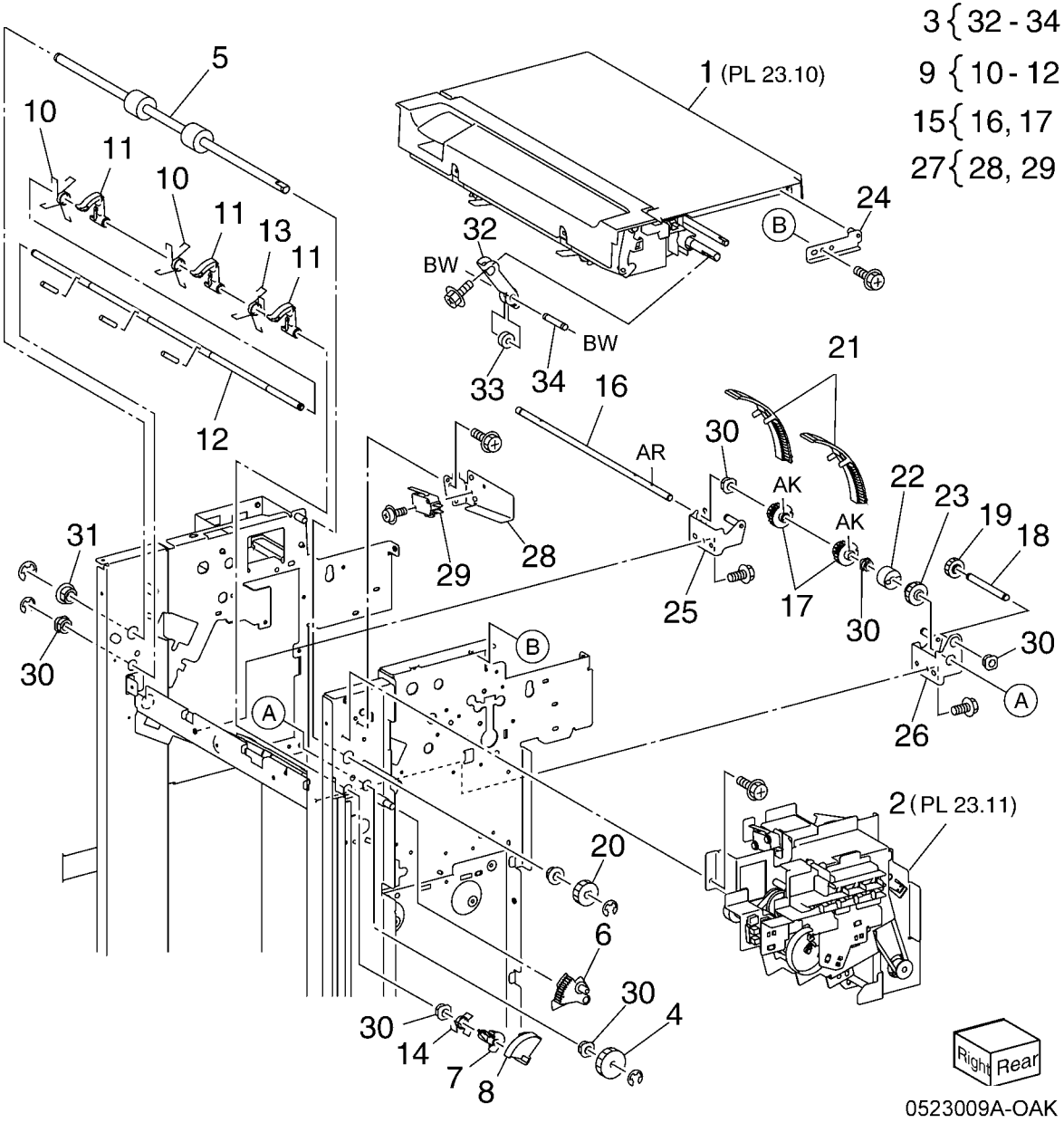

PL 23.10 Finisher Eject (2 of 5) (Office Finisher LX)

Item	Part	Description
1	848E15291	Top Right Hand Cover
2	011E20781	Top Cover Lever
3	003E76111	Top Cover Latch
4	–	Shaft (Not Spared)
5	809E79031	Spring
6	848E15301	Eject Cover (REP 23.9)
7	054K35302	Eject Chute
8	121K41632	Sub Paddle Solenoid Assembly (REP 23.14)
9	–	Bracket (P/O PL 23.10 Item 8)
10	–	Damper (P/O PL 23.10 Item 8)
11	–	Sub Paddle Solenoid (P/O PL 23.10 Item 8)
12	–	Eject Roller Assembly (Not Spared)
13	031K93770	Paddle Arm Assembly
14	–	Sub Paddle Arm (Not Spared)
15	423W08655	Belt
16	–	Sub Paddle (P/O PL 23.10 Item 13)
17	–	Pulley (P/O PL 23.10 Item 13)
18	–	Pulley (P/O PL 23.10 Item 13)
19	–	Gear/Pulley (31T/20T) (Not Spared)
20	–	Eject Pinch Roller Assembly (Not Spared)
21	–	Bearing (P/O PL 23.10 Item 20)
22	059K55102	Eject Pinch Roller
23	–	Bracket (P/O PL 23.10 Item 20)
24	–	Shaft (P/O PL 23.10 Item 12)
25	–	Spring (Not Spared)
26	–	Bracket (P/O PL 23.10 Item 12)
27	809E79050	Spring
28	006K86690	Eject Drive Shaft
29	–	Bearing (Not Spared)
30	–	Bearing (Not Spared)
31	–	Eject Chute Assembly (Not Spared)
32	–	Eject Eliminator (P/O PL 23.10 Item 20)

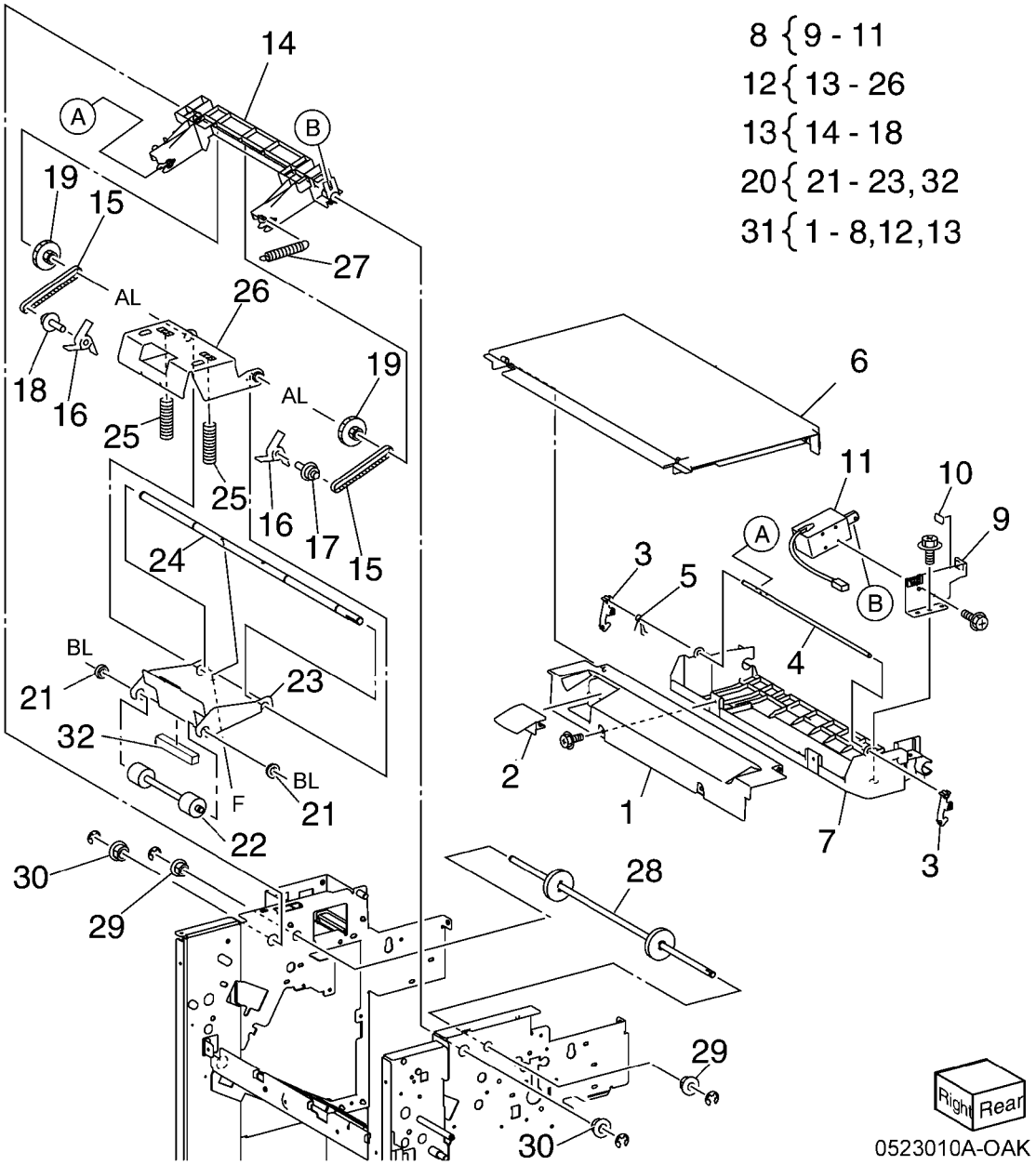

PL 23.11 Finisher Eject (3 of 5) (Office Finisher LX)

Item	Part	Description
1	807E20931	Gear (82T/77T/51T)
2	807E20940	Gear (38T)
3	–	Eject Motor Assembly (Not Spared) (REP 23.22)
4	127K53140	Eject Motor (REP 23.25)
5	–	Bracket (P/O PL 23.11 Item 3)
6	807E22030	Gear/Pulley (20T/49T)
7	423W31054	Belt
8	807E21330	Gear (28T/22T/38T)
9	807E21340	Gear (25T)
10	807E21350	Gear/Pulley (32T/25T)
11	807E21360	Gear (23T)
12	121K34631	Set Clamp Clutch (34T)
13	120E29591	Set Clamp Cam Actuator
14	130K72170	Stacker Height Sensor 1 Assembly
15	–	Bracket (P/O PL 23.11 Item 14)
16	930W00111	Stacker Height Sensor 1, Stacker Height Sensor 2, Eject Clamp Home Sensor, Set Clamp Home Sensor (REP 23.13)
17	130K72180	Stacker Height Sensor 2 Assembly
18	–	Bracket (P/O PL 23.11 Item 17)
19	–	Eject Cover Switch (P/O PL 23.11 Item 37)
20	–	Harness Guide (Not Spared)
21	120E29851	Gear Select Actuator
22	–	Eject Drive Bracket Assembly (Not Spared)
23	–	Bracket (P/O PL 23.11 Item 22)
24	–	Bracket (P/O PL 23.11 Item 22)
25	–	Shaft (P/O PL 23.11 Item 22)
26	008E96770	Clamp Set Cam
27	809E79070	Spring
28	–	Bracket (P/O PL 23.11 Item 22)
29	–	Shaft (P/O PL 23.11 Item 22)
30	008E96691	Eject Clamp Cam
31	413W11660	Sleeve Bearing
32	–	Sleeve Bearing (P/O PL 23.11 Item 22)
33	005E25810	Drive Eject Flange
34	130K72190	Eject Clamp Home Sensor Assembly
35	–	Bracket (P/O PL 23.11 Item 34)
36	–	Bracket (P/O PL 23.11 Item 37)
37	–	Eject Cover Switch Assembly (Not Spared)
38	809E79820	Spring
39	807E22040	Gear (30T)
40	423W25954	Belt

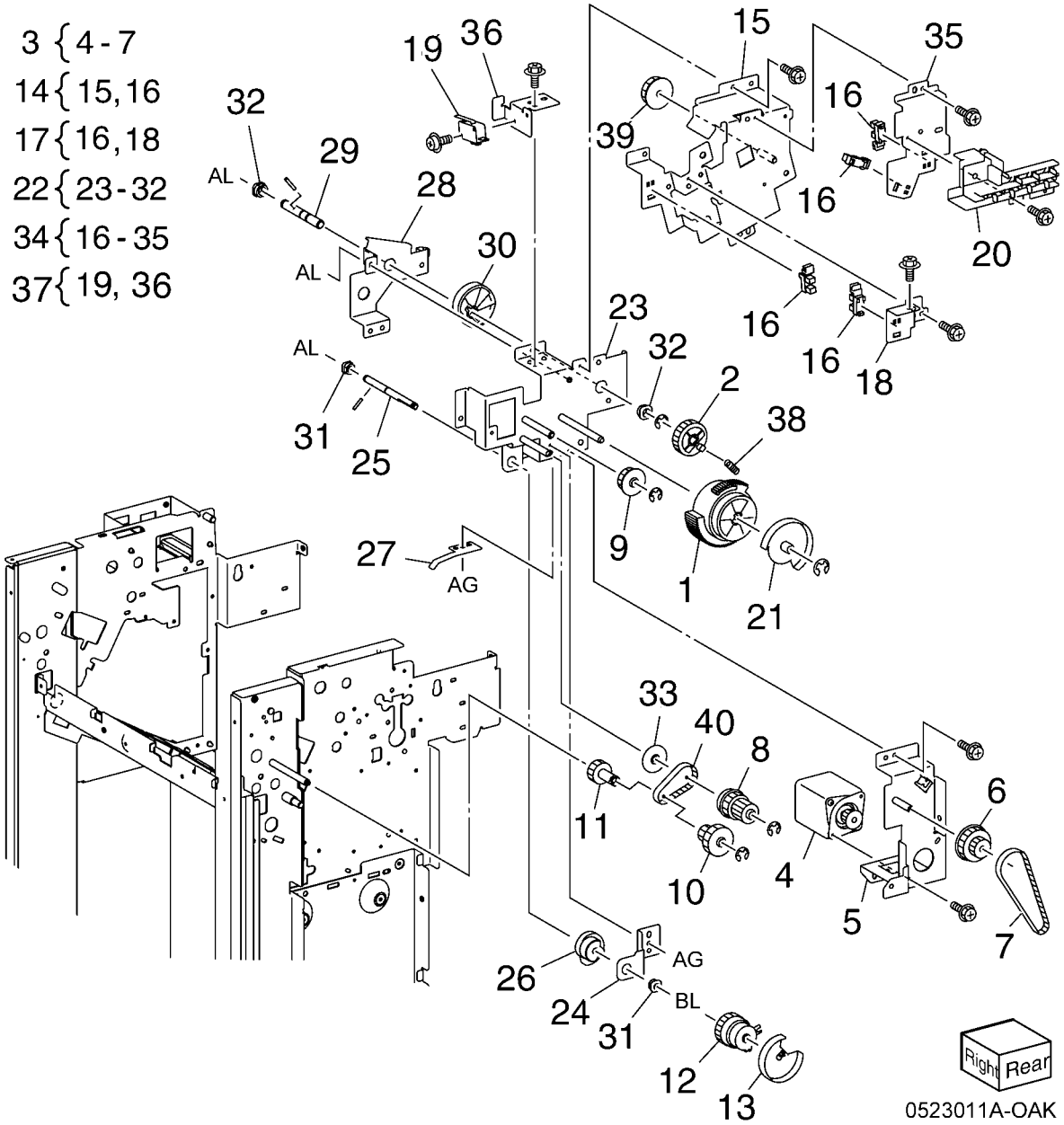

PL 23.12 Finisher Eject (4 of 5) (Office Finisher LX)

Item	Part	Description
1	050K61091	Compiler Tray Assembly (REP 23.17)
2	038E36462	Tamper Guide, Rear
3	–	Compiler Center Paper Guide (P/O PL 23.12 Item 1)
4	–	Compiler Rear Paper Guide (P/O PL 23.12 Item 1)
5	–	Bracket (P/O PL 23.12 Item 1)
6	127K48210	Tamper Motor
7	–	Rack (Front) (P/O PL 23.12 Item 1)
8	930W00111	Front Tamper Home Sensor, Rear Tamper Home Sensor (REP 23.27)
9	130E81600	Compiler Tray No Paper Sensor (REP 23.28)
10	–	Spring (P/O PL 23.12 Item 1)
11	–	Tamper Front Guide (P/O PL 23.12 Item 1)
12	–	Tamper Rear Guide (P/O PL 23.12 Item 1)
13	–	Compiler Tray (P/O PL 23.12 Item 1)
14	–	Paper Paddle Guide (P/O PL 23.12 Item 1)
15	809E79000	Spring
16	–	Paper End Guide (P/O PL 23.12 Item 1)
17	–	Paper Tray Guide (P/O PL 23.12 Item 1)
18	–	Spring (P/O PL 23.12 Item 1)
19	–	Spring (P/O PL 23.12 Item 1)
20	–	Harness Guide (P/O PL 23.12 Item 1)
21	120E29760	Actuator
22	801E04903	Tamper Base
23	038E36452	Tamper Guide, Front

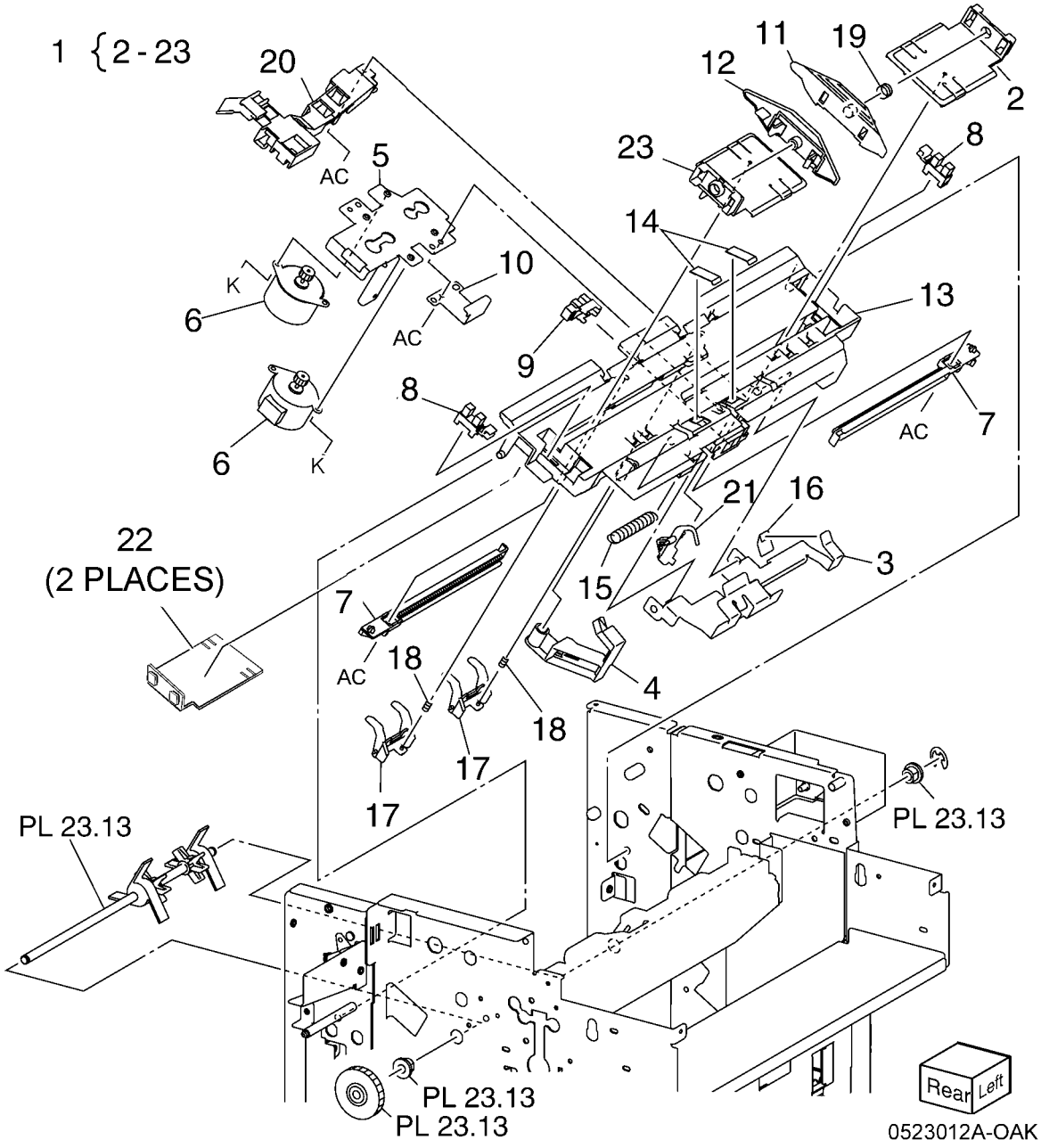

PL 23.13 Finisher Eject (5 of 5) (Office Finisher LX)

Item	Part	Description
1	068K58823	Transport Motor
2	068K58832	Tension Roller Assembly
3	809E78980	Spring
4	020E45341	Pulley (30T)
5	020E45571	Pulley (41T)
6	–	Gear/Pulley (27T/30T) (Not Spared)
7	007K98300	Gear
8	059K55080	Entrance Roller
9	059K55090	Exit Roller
10	423W18754	Eject Belt (REP 23.21)
11	006K86813	Paddle Shaft Assembly
12	033E92850	Cyclone Paddle
13	–	Paddle Shaft (P/O PL 23.13 Item 11)
14	413W75959	Bearing

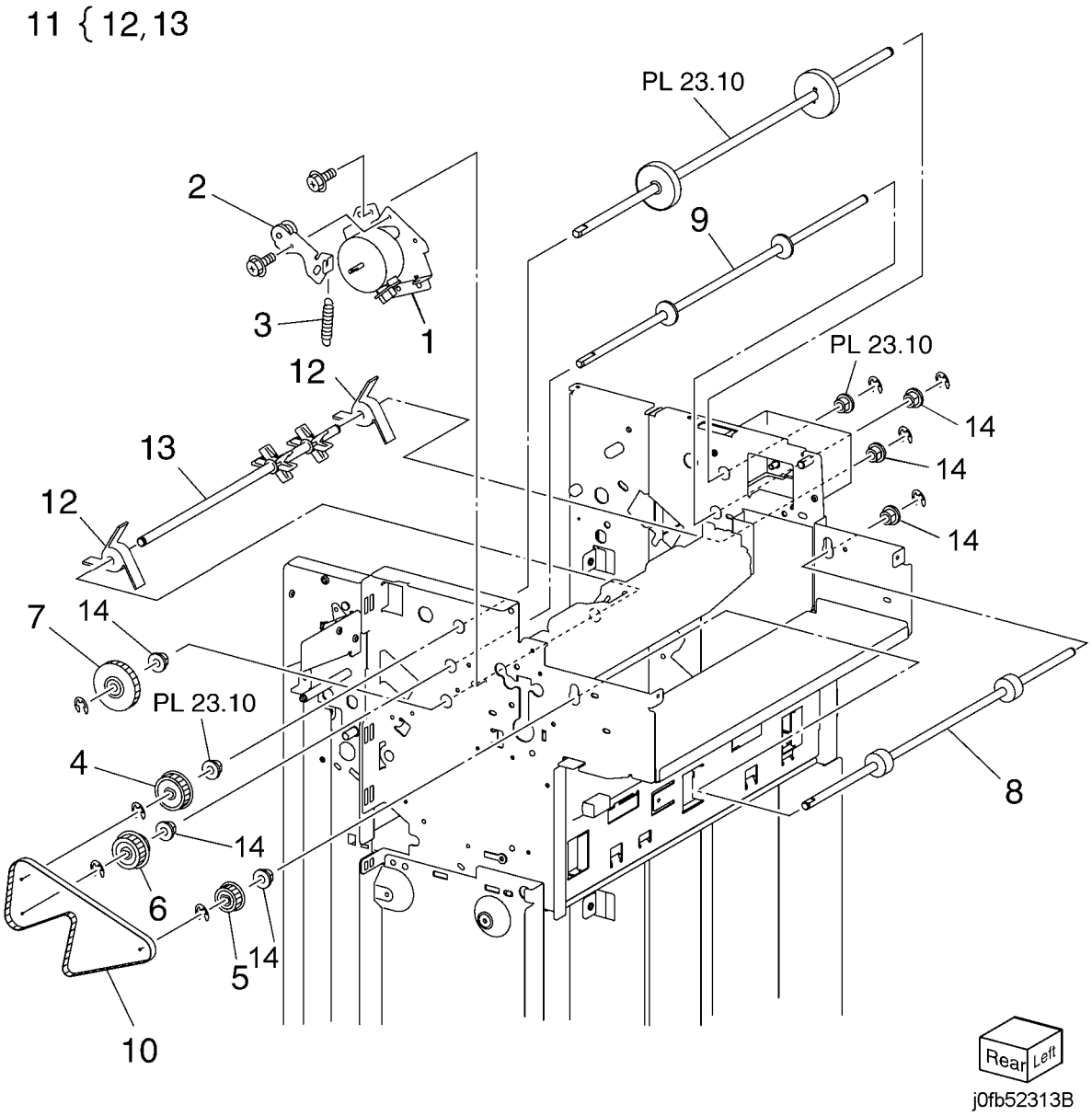

PL 23.14 Finisher Exit/Folder Assembly (Office Finisher LX)

Item	Part	Description
1	–	Lower Chute Assembly (Not Spared)
2	–	Lower Chute (P/O PL 23.14 Item 1)
3	806E22121	Shaft
4	059E03710	Pinch Roll
5	809E78960	Spring
6	054K35540	Exit Upper Chute Assembly
7	–	Exit Upper Chute (P/O PL 23.14 Item 6)
8	105E18000	Static Eliminator
9	038E36420	Paper Guide
10	130K88311	Compiler Exit Sensor, Finisher Entrance Sensor
11	054K48530	Exit Lower Chute Assembly
12	–	Exit Lower Chute (P/O PL 23.14 Item 11)
13	–	Pinch Roll Assembly (P/O PL 23.14 Item 11)
14	–	Spring (P/O PL 23.14 Item 13)
15	059K56321	Pinch Roll
16	054K35264	Chute Assembly
17	–	Lower Chute (P/O PL 23.14 Item 16)
18	–	Upper Chute (P/O PL 23.14 Item 16)
19	026K81200	Thumb Screw
20	–	Chute Assembly (Not Spared)
21	695K18691	Crease Assembly (Option) (REP 23.18)

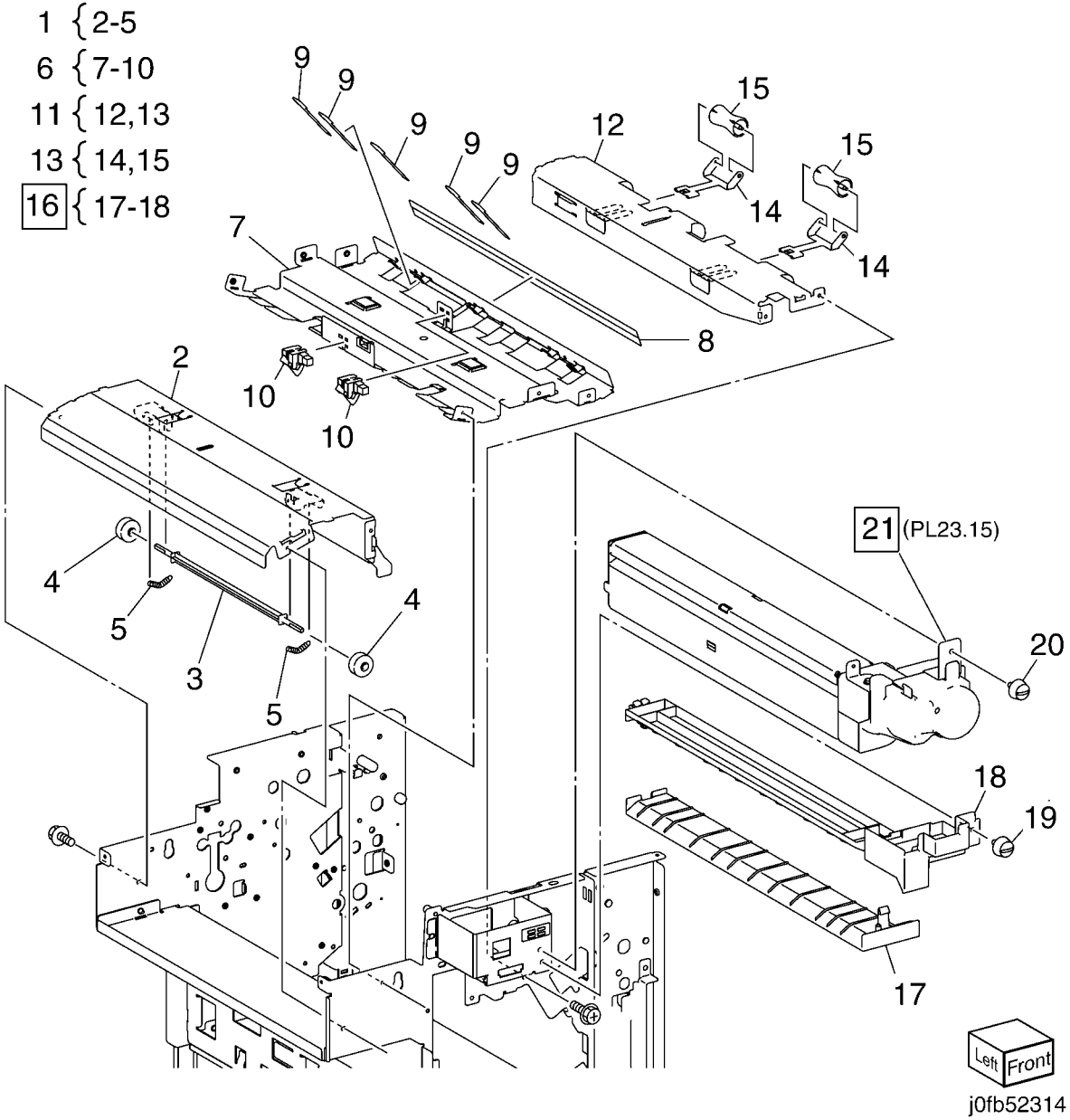

PL 23.15 Folder Assembly (Office Finisher LX)

Item	Part	Description
1	–	Upper Chute (P/O PL 23.14 Item 21)
2	–	Upper Plate (P/O PL 23.14 Item 21)
3	–	Knife Assembly (P/O PL 23.14 Item 21)
4	–	Blade Holder (P/O PL 23.15 Item 3)
5	–	Lower Holder 1 (P/O PL 23.15 Item 3)
6	–	Lower Holder 2 (P/O PL 23.15 Item 3)
7	–	Bracket (P/O PL 23.15 Item 3)
8	–	Blade (P/O PL 23.15 Item 3)
9	–	Spring (P/O PL 23.14 Item 2)
10	–	Frame (P/O PL 23.14 Item 21)
11	–	Front Cover (P/O PL 23.14 Item 21)
12	–	Bracket (P/O PL 23.14 Item 21)
13	–	Folder Knife Motor Assembly (P/O PL 23.14 Item 21)
14	–	Motor Bracket (P/O PL 23.15 Item 13)
15	–	Folder Knife Motor (P/O PL 23.15 Item 13)
16	–	Folder Home Sensor (P/O PL 23.15 Item 13)
17	–	Cam Shaft Assembly (P/O PL 23.14 Item 21)
18	–	Guide (P/O PL 23.14 Item 21)
19	–	Gear (28T/8T) (P/O PL 23.14 Item 21)
20	–	Encoder (P/O PL 23.14 Item 21)
21	–	Bearing (P/O PL 23.14 Item 21)
22	–	Gear (12T/27T) (P/O PL 23.14 Item 21)
23	–	Gear (12T/30T) (P/O PL 23.14 Item 21)
24	–	Gear (12T/51T) (P/O PL 23.14 Item 21)
25	–	Wire Harness (P/O PL 23.14 Item 21)

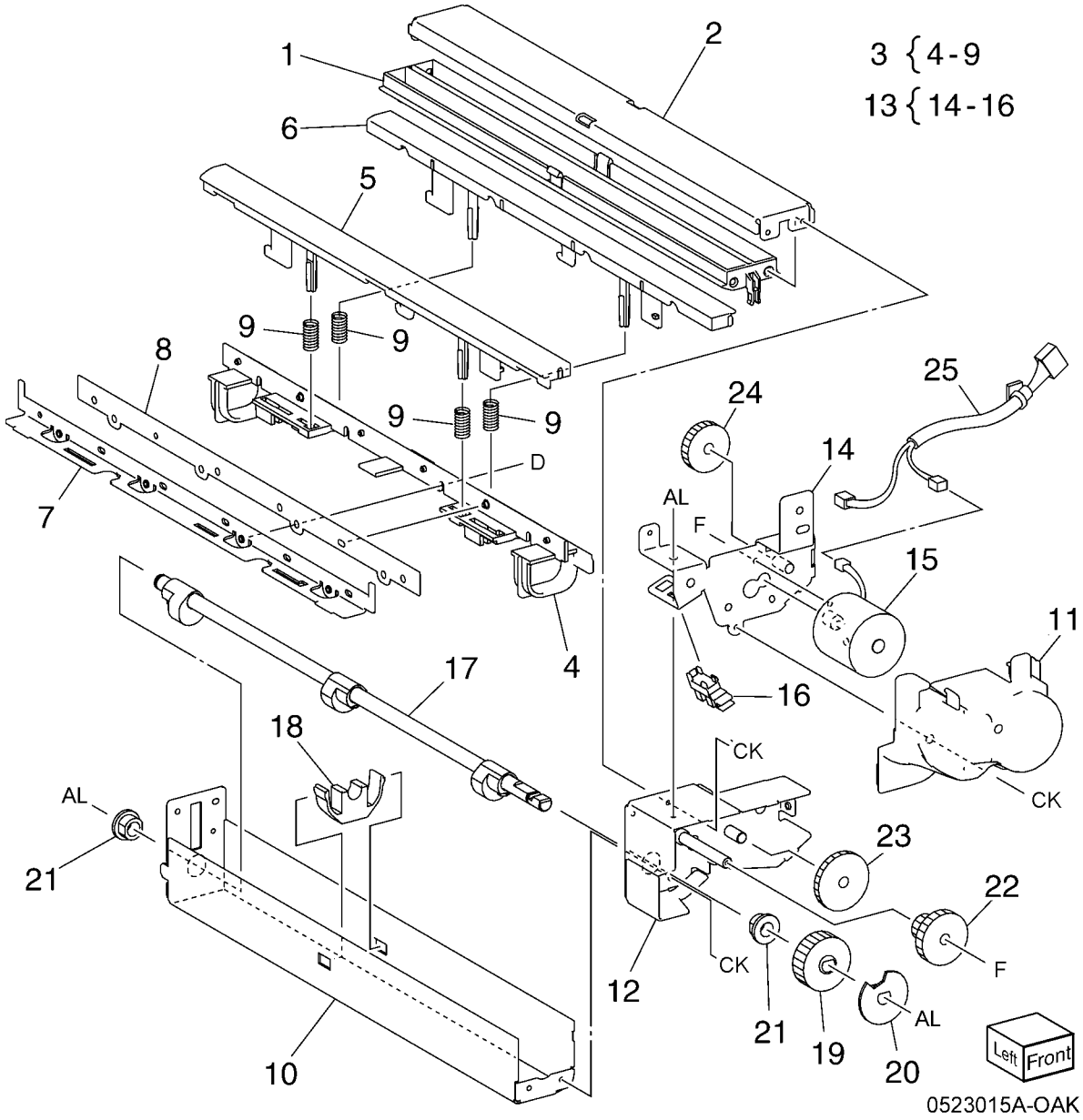

PL 23.16 Finisher Electrical (Office Finisher LX)

Item	Part	Description
1	–	LVPS Cover (Not Spared)
2	960K51447	Finisher PWB (REP 23.23)
–	960K50992	Finisher PWB
3	–	Harness Guide (Not Spared)
4	–	Harness Guide (Not Spared)
5	–	Harness Guide (Not Spared)
6	–	Magnet (Not Spared)
7	815K04920	Gasket Plate Assembly
8	962K60592	Wire Harness
9	–	Wire Harness (Not Spared)
10	–	Wire Harness (Not Spared)
11	–	Wire Harness (Not Spared)
12	–	Wire Harness (Not Spared)
13	962K60481	Wire Harness
14	–	Wire Harness (Not Spared)
15	–	Wire Harness (Not Spared)
16	962K74540	Power Cable
17	105E17550	Finisher LVPS (REP 23.24)
18	–	Bracket (Not Spared)
19	110E97990	Finisher Front Door Interlock Switch

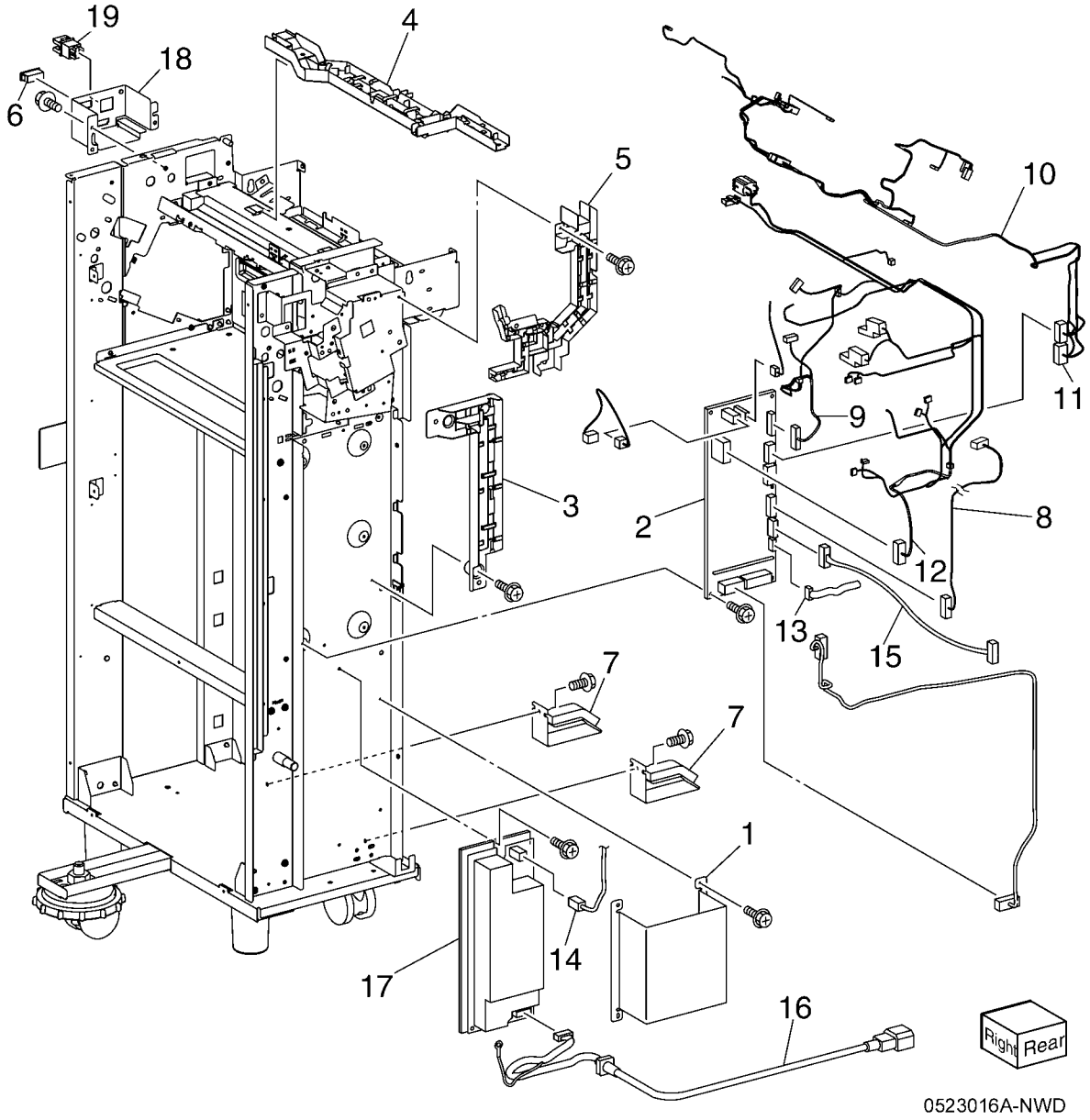

PL 23.17 Booklet Cover (Office Finisher LX)

Item	Part	Description
1	–	Frame Assembly (Not Spared)
2	–	Booklet Stapler Assembly (Not Spared)
3	848E15333	Rear Cover (REP 23.33)
4	–	Front Cover (Not Spared) (REP 23.32)
5	–	Top Cover (REP 23.34)
6	848E15350	Side Cover
7	848E15361	PWB Cover (REP 23.35)
8	–	Left Cover (Not Spared) (REP 23.36)
9	–	Harness Guide (Not Spared)

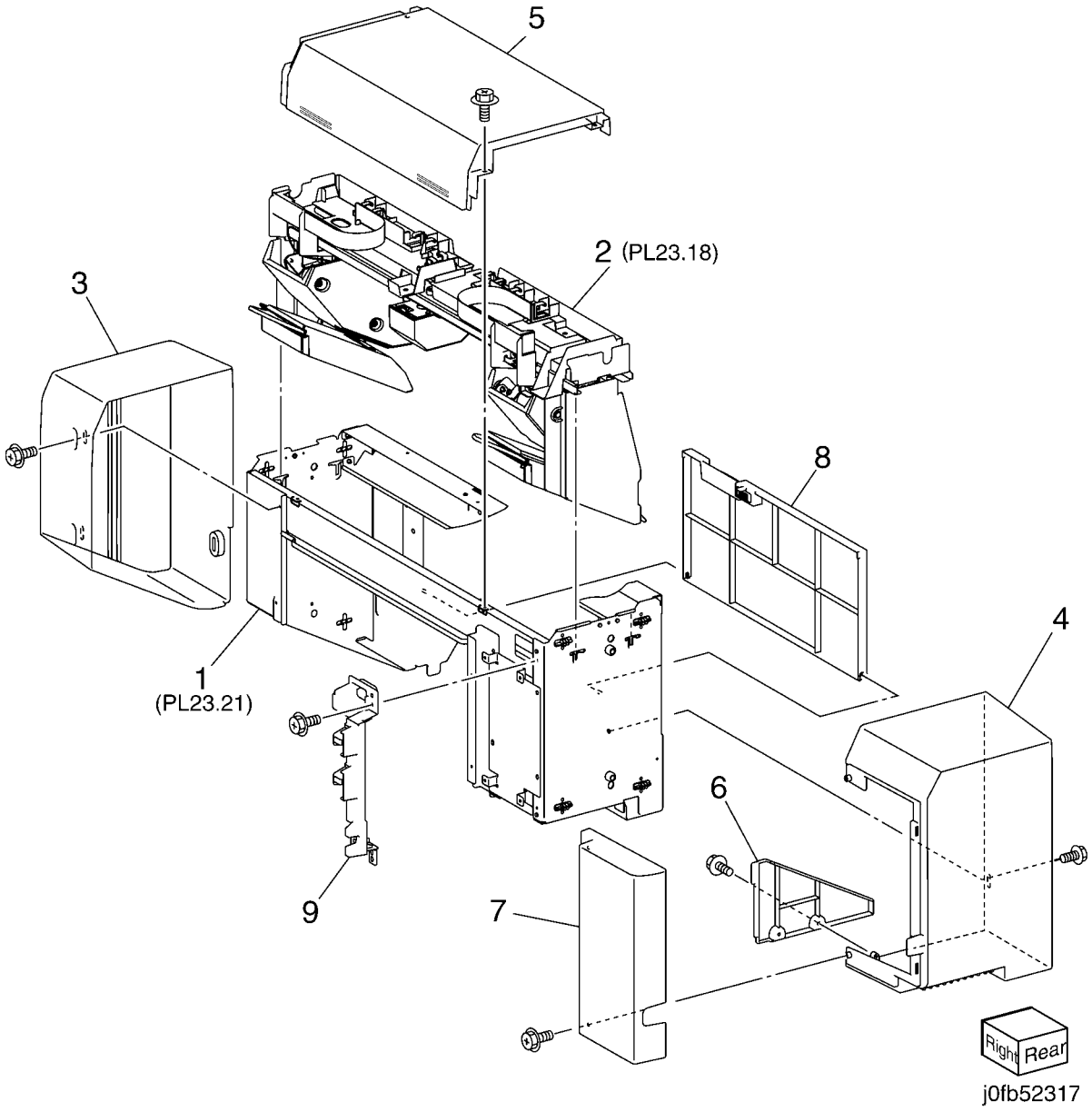

PL 23.18 Booklet Stapler Assembly (Office Finisher LX)

Item	Part	Description
1	–	Front Carriage Rail (Not Spared)
2	–	Frame (P/O PL 23.18 Item 1)
3	–	Core (P/O PL 23.18 Item 1)
4	127K57051	Booklet Stapler Move Motor Assembly (REP 23.38)
5	–	Belt (P/O PL 23.18 Item 4)
6	–	Bracket (P/O PL 23.18 Item 4)
7	–	Gear (12T) (P/O PL 23.18 Item 4)
8	–	Pulley (50T) (P/O PL 23.18 Item 4)
9	127K57622	Booklet Stapler Move Motor
10	–	Wire Harness (P/O PL 23.18 Item 4)
11	–	Sensor Bracket Assembly (P/O PL 23.18 Item 1)
12	–	Sensor Bracket (P/O PL 23.18 Item 11)
13	930W00111	Booklet Stapler Move Home Sensor, Booklet Stapler Move Position Sensor
14	–	Rear Rack Gear (Not Spared)
15	–	Carriage Assembly (Not Spared)
16	–	Carriage (P/O PL 23.18 Item 15)
17	–	Core (P/O PL 23.18 Item 15)
18	–	Core (Not Spared)
19	–	Front Rack Gear (Not Spared)
20	848E15400	Motor Cover
21	032K05222	Harness Guide Assembly
22	–	Harness Strap (P/O PL 23.18 Item 21)
23	920W01210	Locking Clamp
24	–	Harness Guide (Front) (Not Spared)
25	–	Harness Guide (Rear) (Not Spared)
26	–	Rear Rack Guide (Not Spared)

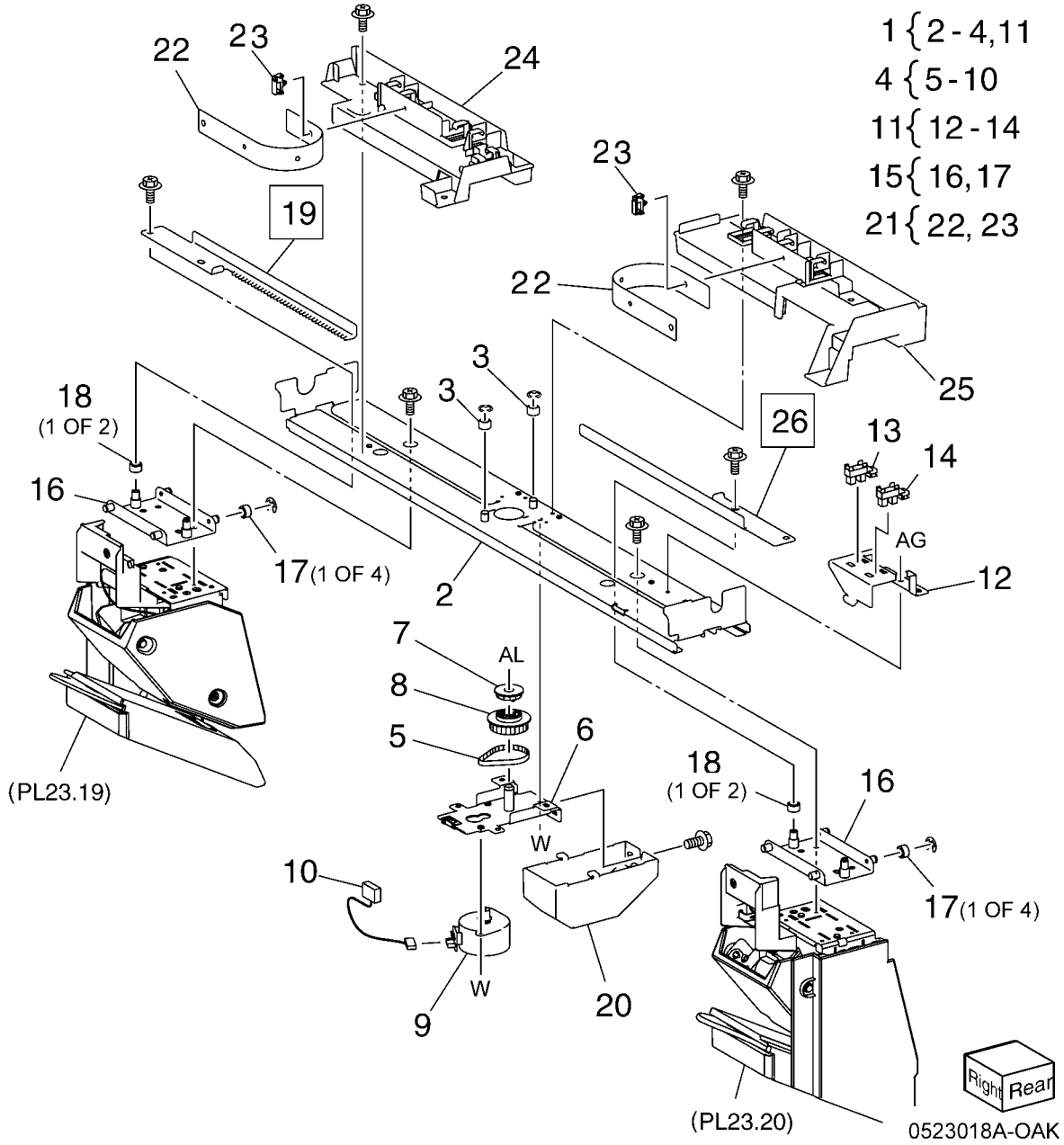

PL 23.19 Booklet Front Stapler Assembly (Office Finisher LX)

Item	Part	Description
1	–	Booklet Front Stapler Assembly
2	–	Bracket (P/O PL 23.19 Item 1)
3	–	Rear Cover (P/O PL 23.19 Item 1)
4	–	Bracket (P/O PL 23.19 Item 1)
5	–	Chute
6	–	Sub Chute (P/O PL 23.19 Item 1)
7	–	Support (P/O PL 23.19 Item 1)
8	–	Spring (P/O PL 23.19 Item 1)
9	–	Exit Sub Chute (P/O PL 23.19 Item 1)
10	–	Spring (P/O PL 23.19 Item 1)
11	–	Front Cover (P/O PL 23.19 Item 1)
12	848E15421	Lower Cover
13	–	Booklet Stapler Assembly (P/O PL 23.19 Item 1) (REP 23.37)
14	–	Wire Harness (P/O PL 23.19 Item 1)
15	–	Guide (P/O PL 23.19 Item 1)
16	–	Booklet Staple Cassette Assembly (Not Spared)

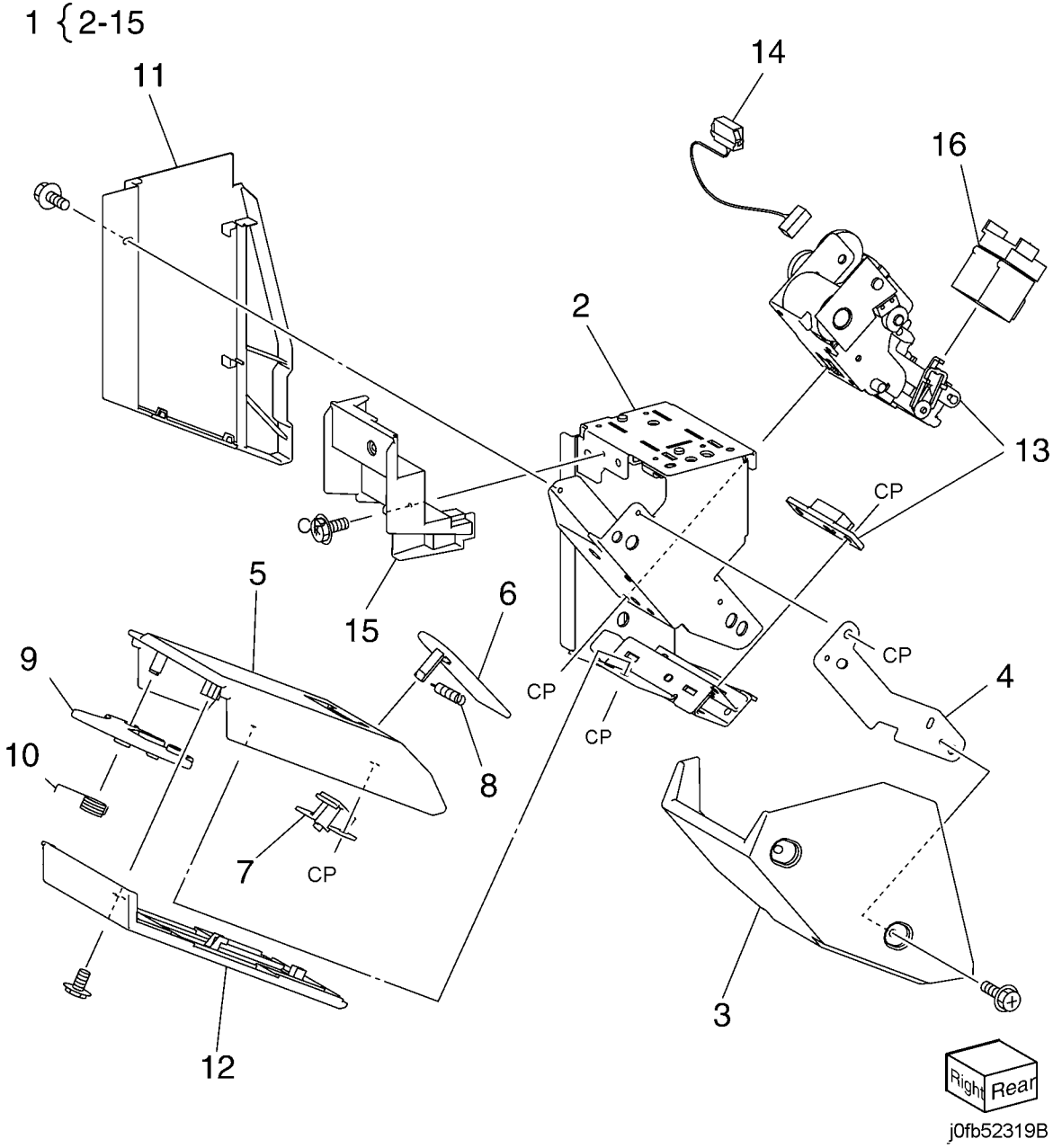

PL 23.20 Booklet Rear Stapler Assembly (Office Finisher LX)

Item	Part	Description
1	029K92500	Booklet Rear Stapler Assembly
2	–	Bracket (P/O PL 23.20 Item 1)
3	–	Rear Cover (P/O PL 23.20 Item 1)
4	–	Bracket (P/O PL 23.20 Item 1)
5	054K35282	Chute
6	–	Sub Chute (P/O PL 23.20 Item 1)
7	–	Support (P/O PL 23.20 Item 1)
8	–	Spring (P/O PL 23.20 Item 1)
9	–	Sub Chute (P/O PL 23.20 Item 1)
10	–	Spring (P/O PL 23.20 Item 1)
11	–	Front Cover (P/O PL 23.20 Item 1)
12	848E15421	Lower Cover
13	–	Booklet Stapler Assembly (P/O PL 23.20 Item 1) (REP 23.37)
14	–	Wire Harness (P/O PL 23.20 Item 1)
15	–	Guide (P/O PL 23.20 Item 1)
16	–	Booklet Staple Cassette Assembly (P/O PL 23.20 Item 1)

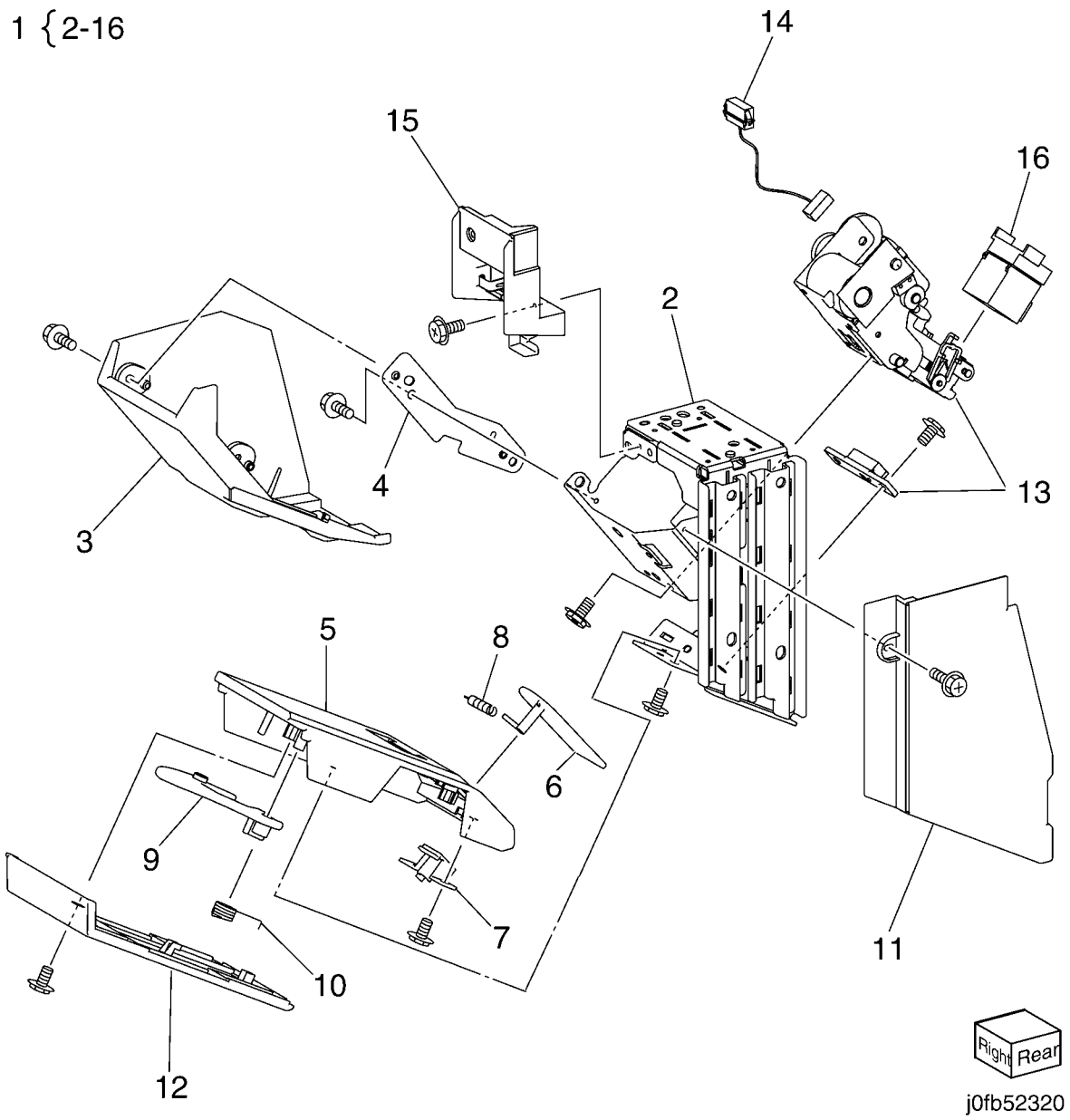

PL 23.21 Booklet Electrical (Office Finisher LX)

Item	Part	Description
1	068K58350	Booklet Stapler Safety Switch Assembly
2	110E12970	Booklet Stapler Safety Switch
3	–	Bracket (P/O PL 23.21 Item 1)
4	960K32543	Booklet PWB (REP 23.30)
5	–	Wire Harness (Not Spared)
6	–	Wire Harness (Not Spared)
7	–	Wire Harness (Not Spared)
8	–	Booklet Stapler Cover Switch Assembly (Not Spared)
9	–	Bracket (P/O PL 23.21 Item 8)
10	–	Booklet Stapler Cover Switch (P/O PL 23.21 Item 8)
11	–	Plate (Not Spared)
12	962K60533	Wire Harness
13	962K60540	Wire Harness

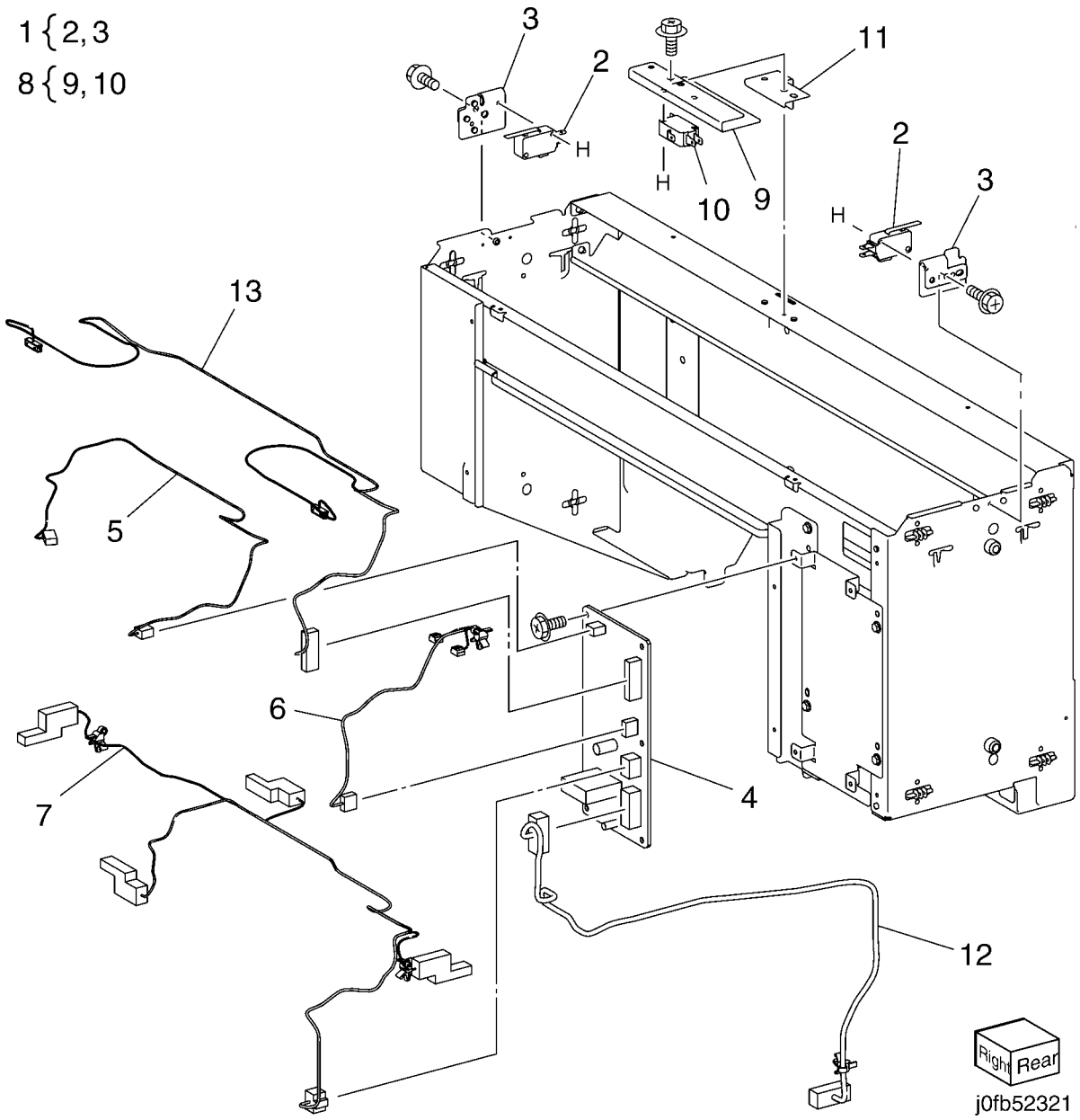

PL 28.1 HCF Unit

Item	Part	Description
1	604K23535	Joint Plate
–	604K23830	HCF Docking Plate
2	003K91881	Knob
3	130K55590	HCF Tray Set Sensor
4	801K15700	Tray Rail
5	–	HCF Tray 6 (REF: PL 28.2, PL 28.3) (REP 19.1)
6	–	Left Top Cover (Not Spared)
7	–	Right Cover (Not Spared)
8	–	Front Right Cover (Not Spared)
9	–	Left Cover (Not Spared)
10	–	Rear Cover
11	–	HCF Feeder (REP 19.2)
12	–	Label (Top)
13	–	Label (Tray Number) (Not Spared)
14	–	Label (Size) (Not Spared)
15	–	Label (End) (Not Spared)
16	–	Frame Assembly (Not Spared)

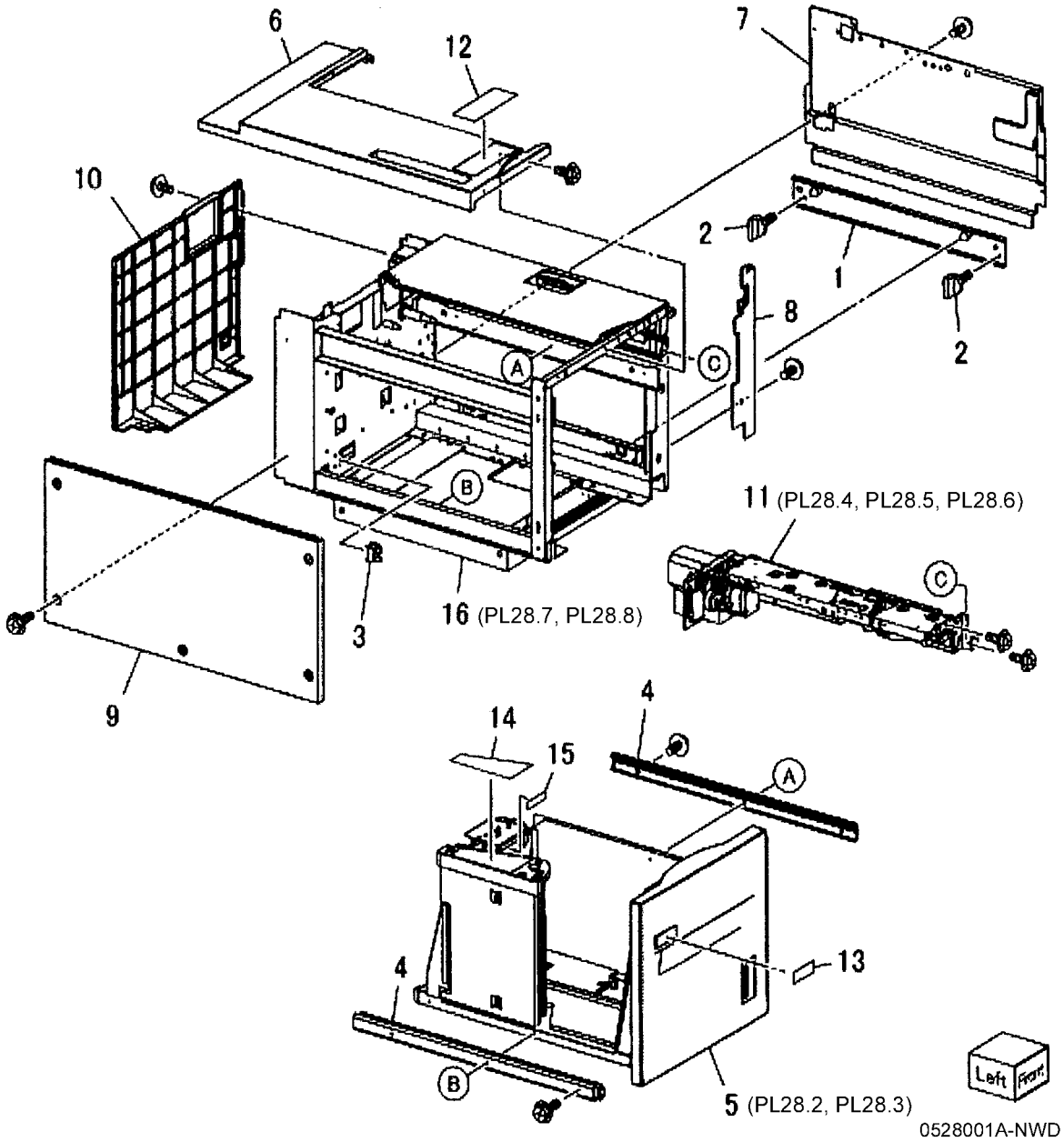

PL 28.2 HCF Tray 6 (1 of 2)

Item	Part	Description
1	–	Tray Latch Assembly (Not Spared)
2	003K13592	Tray Latch
3	–	Spring (P/O PL 28.2 Item 1)
4	–	Latch Lever (P/O PL 28.2 Item 1)
5	–	Magnet (P/O PL 28.1 Item 5)
6	–	Wave Washer (P/O PL 28.1 Item 5)
7	–	Front Cover (P/O PL 28.1 Item 5)
8	–	Gear Bracket (P/O PL 28.1 Item 5)
9	–	Label (Gauge) (P/O PL 28.1 Item 5)
10	–	Frame (P/O PL 28.1 Item 5)
11	–	Plate (P/O PL 28.1 Item 5)
12	–	Bracket (P/O PL 28.1 Item 5)
13	–	Pin (P/O PL 28.1 Item 5)
14	–	Spring (P/O PL 28.1 Item 5)
15	–	Top Plate (P/O PL 28.1 Item 5)

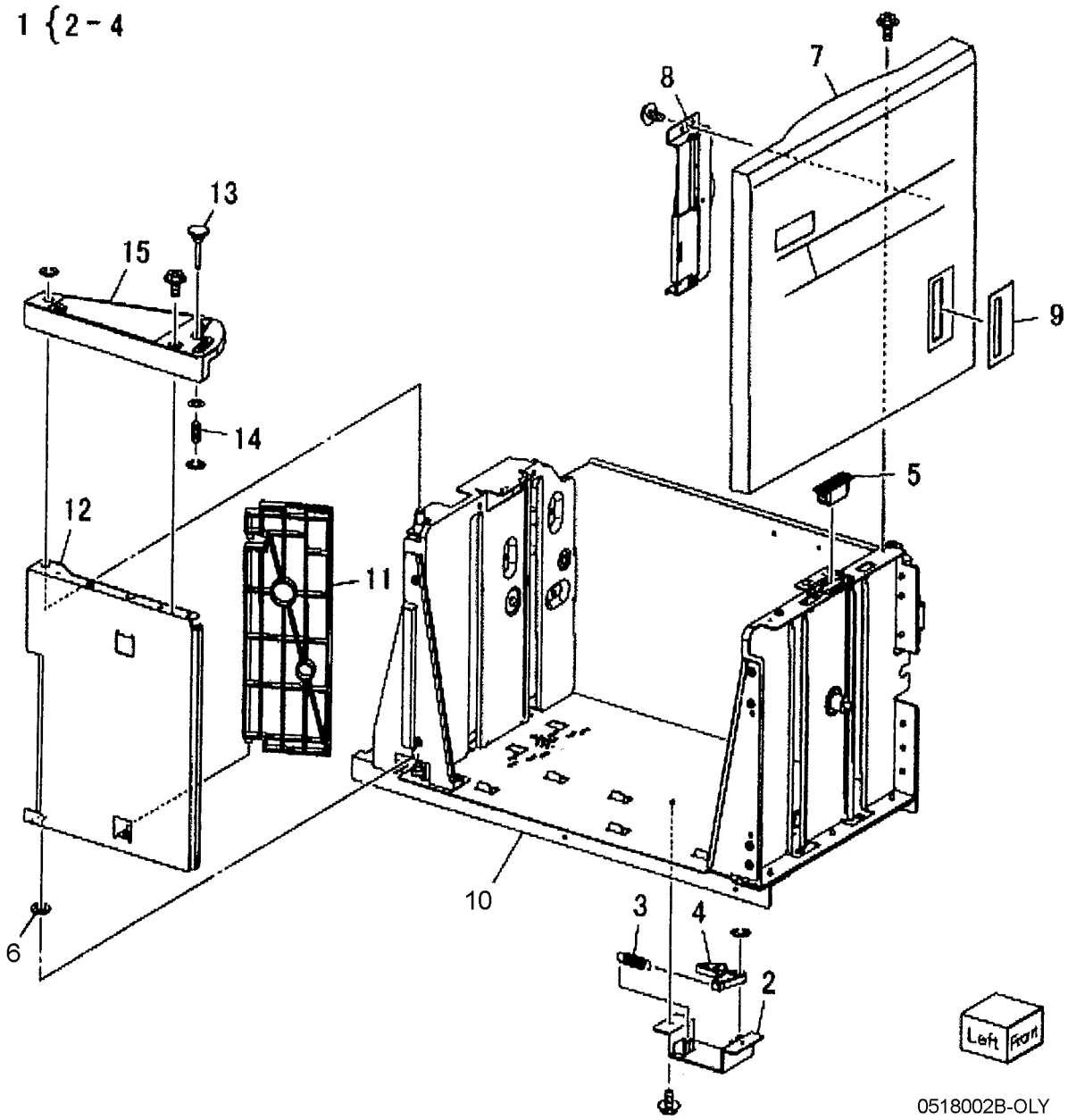

PL 28.3 HCF Tray 6 (2 of 2)

Item	Part	Description
1	–	Lift Shaft (P/O PL 28.1 Item 5)
2	–	Bearing (P/O PL 28.1 Item 5)
3	–	Bearing (P/O PL 28.1 Item 5)
4	020E37620	Tray Cable Pulley
5	–	Gear (P/O PL 28.1 Item 5)
6	–	Gear (P/O PL 28.1 Item 5)
7	–	Bottom Plate (P/O PL 28.1 Item 5)
8	019E58620	Pad
9	–	Front Side Guide (P/O PL 28.1 Item 5)
10	–	Rear Side Guide (P/O PL 28.1 Item 5)
11	604K19981	Cable And Pulley Kit (REP 19.4)
12	032E22410	Wire Guide (L)
13	–	Pulley (P/O PL 28.1 Item 5)
14	–	Wire Guide (S) (P/O PL 28.1 Item 5)
15	–	Pulley (P/O PL 28.1 Item 5)
16	–	Screw (P/O PL 28.1 Item 5)
17	015K65532	Gear Bracket Assembly
18	–	Gear Bracket (P/O PL 28.3 Item 17)
19	–	Contact Gear (P/O PL 28.3 Item 17)
20	–	Gear (P/O PL 28.3 Item 17)
21	–	Gear (P/O PL 28.3 Item 17)
22	–	Brake (P/O PL 28.3 Item 17)
23	–	Spring (P/O PL 28.3 Item 17)
24	807E04500	Lift Gear
25	–	Plate (P/O PL 28.1 Item 5)

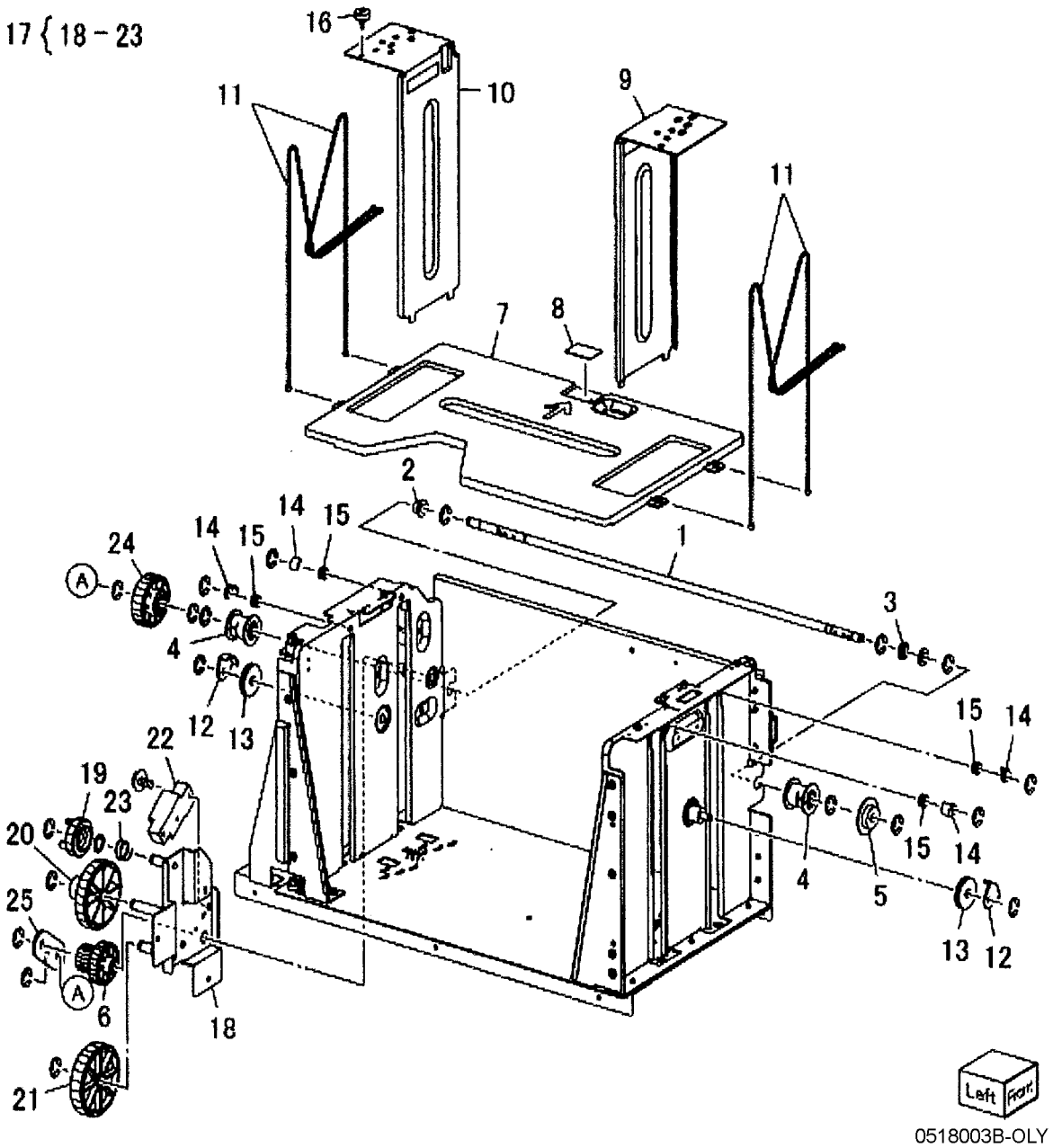

PL 28.4 HCF Feeder (1 of 3)

Item	Part	Description
1	–	Shaft (P/O PL 28.1 Item 11)
2	007E78760	Gear (19T)
3	–	Gear (25T) (P/O PL 28.1 Item 11)
4	007E78780	Gear (25T)
5	007E78790	Gear (40T)
6	013E25530	Bearing
7	–	Block (P/O PL 28.1 Item 11)
8	–	Spacer (P/O PL 28.1 Item 11)
9	019E56470	Holder
10	–	Upper Feeder Assembly (P/O PL 28.1 Item 11)
11	–	Lower Feeder Assembly (P/O PL 28.1 Item 11)
12	–	Ball Bearing (P/O PL 28.1 Item 11)
13	–	Front Frame (P/O PL 28.1 Item 11)
14	–	Pin (P/O PL 28.1 Item 11)
15	–	Down Bracket (P/O PL 28.1 Item 11)
16	–	Link Bracket (P/O PL 28.1 Item 11)
17	–	Rear Frame (P/O PL 28.1 Item 11)
18	–	Tension Spring (P/O PL 28.1 Item 11)
19	–	Lift/Motor Frame (P/O PL 28.1 Item 11)
20	–	Bracket (P/O PL 28.4 Item 19)
21	007K88520	Gear (23T/27T)
22	007K88530	Gear (31T/36T)
23	127K37901	Lift/Feed Motor (REP 19.12)
24	–	Plate (P/O PL 28.4 Item 19)
25	–	Spring (P/O PL 28.1 Item 11)

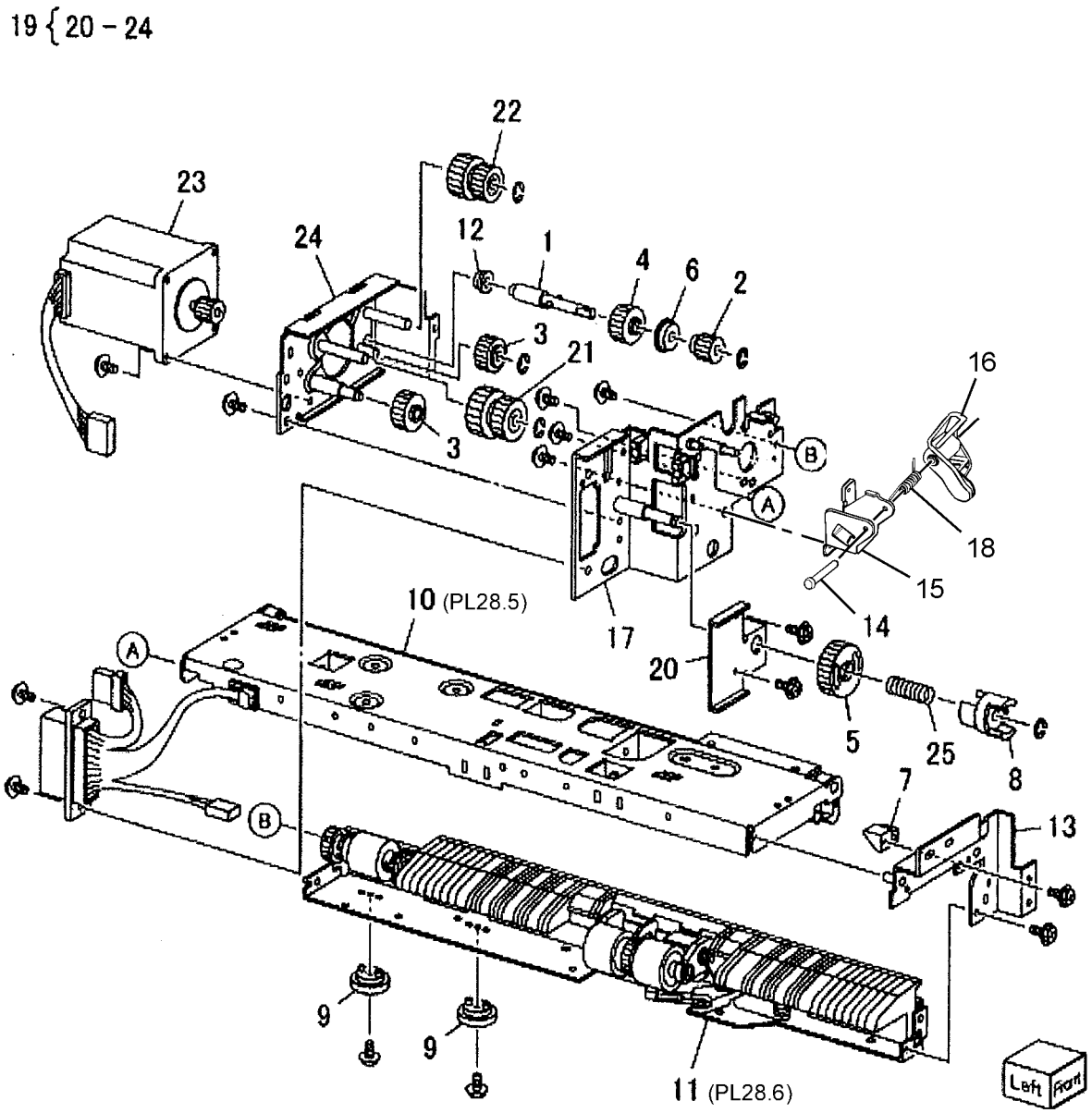

0528004A-NWD

PL 28.5 HCF Feeder (2 of 3)

Item	Part	Description
1	–	Upper Feeder Assembly (P/O PL 28.1 Item 11)
2	003E59570	Latch
3	–	Shaft Latch (P/O PL 28.5 Item 1)
4	006K23124	Feed Shaft Assembly
5	–	Feed Shaft (P/O PL 28.5 Item 4)
6	413W66250	Ball Bearing
7	–	Gear (20T) (P/O PL 28.5 Item 4)
8	007E78180	Feed Gear (25T)
9	–	Lever (P/O PL 28.5 Item 1)
10	–	Bearing (P/O PL 28.5 Item 1)
11	–	Spacer (P/O PL 28.5 Item 1)
12	–	Pin Drive (P/O PL 28.5 Item 1)
13	–	Guide (P/O PL 28.5 Item 1)
14	–	Rear Upper Chute (P/O PL 28.5 Item 1)
15	–	Upper Chute (P/O PL 28.5 Item 1)
16	120E21900	Actuator
17	–	Upper Frame (P/O PL 28.5 Item 1)
18	–	Spring (P/O PL 28.5 Item 1)
19	930W00112	HCF Stack Height Sensor, HCF Paper Sensor
20	930W00211	HCF Pre Feed Sensor
21	–	Wire Harness (P/O PL 28.5 Item 1)
22	059K26691	Feed Roll (REP 19.5)
23	059K26702	Nudger Roll (REP 19.5)

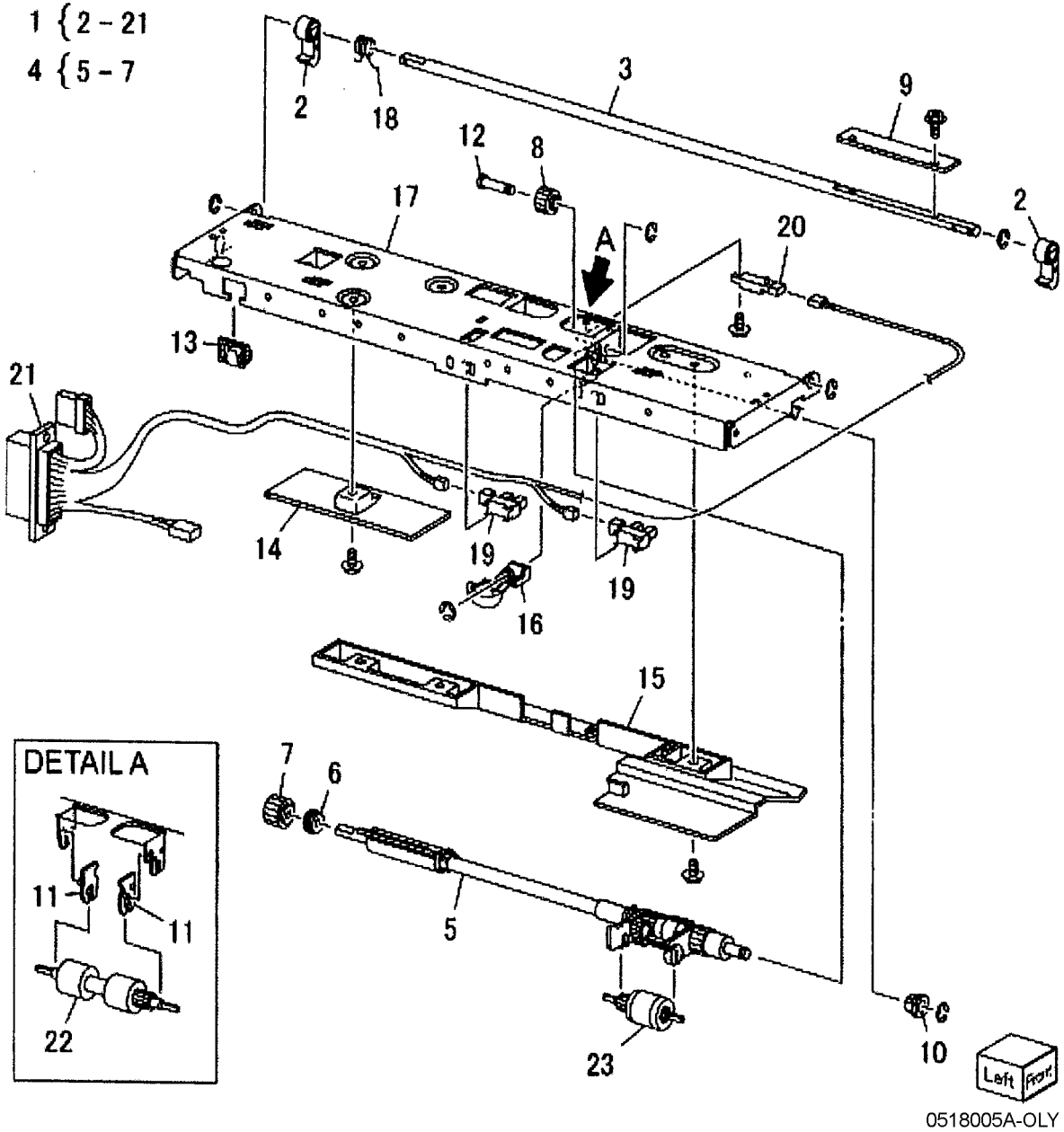

PL 28.6 HCF Feeder (3 of 3)

Item	Part	Description
1	059K26591	Lower Feed Assembly
2	–	Retard Roll Assembly (P/O PL 28.6 Item 1) (REP 19.5)
3	–	Retard Shaft Assembly (P/O PL 28.6 Item 1)
4	–	Collar (P/O PL 28.6 Item 3)
5	005K06701	Friction Clutch
6	–	Shaft (P/O PL 28.6 Item 3)
7	007E78170	Gear (15T)
8	007E89760	Gear (22T)
9	013E23600	Bearing
10	013E23610	Bearing
11	–	Retard Bracket (P/O PL 28.6 Item 1)
12	–	Slide (P/O PL 28.6 Item 1)
13	–	Lever (P/O PL 28.6 Item 1)
14	–	Lower Chute (P/O PL 28.6 Item 1)
15	–	Lower Frame (P/O PL 28.6 Item 1)
16	–	Spring (P/O PL 28.6 Item 1)
17	–	Spring (P/O PL 28.6 Item 1)

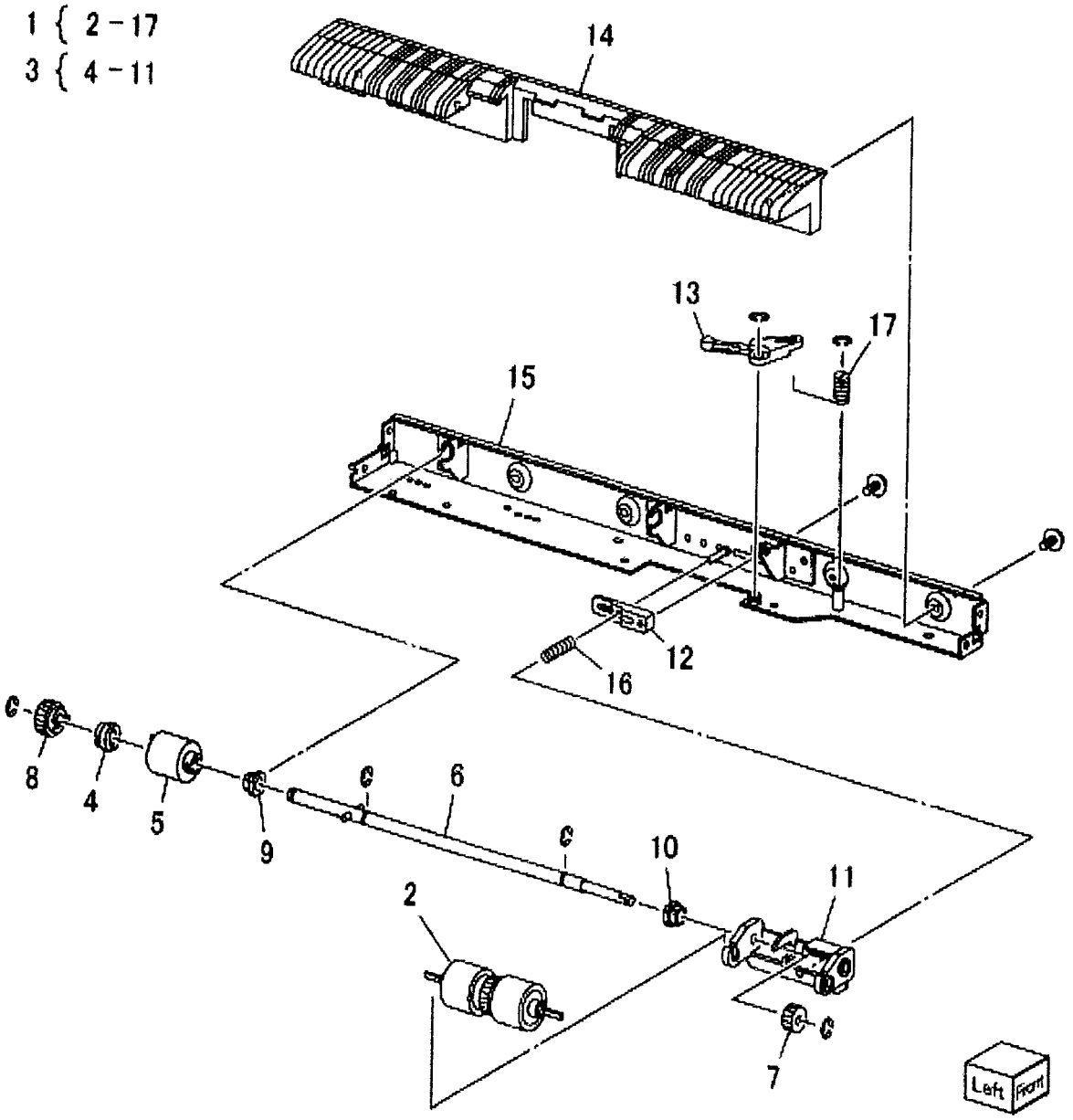

0518006B-KOH

PL 28.7 HCF Top Cover Unit

Item	Part	Description
1	013E17100	Bearing
2	–	Bracket (Not Spared)
3	–	Pivot Bracket (Not Spared)
4	–	Top Cover Assembly (Not Spared)
5	–	Bearing (P/O PL 28.7 Item 4)
6	–	Upper Chute (P/O PL 28.7 Item 4)
7	–	Top Cover (P/O PL 28.7 Item 4)
8	–	Knob (P/O PL 28.7 Item 4)
9	–	Latch (P/O PL 28.7 Item 4)
10	–	Latch (P/O PL 28.7 Item 4)
11	–	Spring (P/O PL 28.7 Item 4)
12	059E01430	Pinch Roller
13	–	Shaft (P/O PL 28.7 Item 4)
14	–	Shaft (P/O PL 28.7 Item 4)
15	–	Spring (P/O PL 28.7 Item 4)
16	–	Spring (P/O PL 28.7 Item 4)
17	–	Gasket (P/O PL 28.7 Item 4)
18	059K36260	Takeaway Roll (REP 19.10)
19	–	Spring (Left) (P/O PL 28.1 Item 16)
20	–	Spring (Right) (P/O PL 28.1 Item 16)
21	–	Pivot Shaft (P/O PL 28.1 Item 16)
22	–	Bracket (P/O PL 28.1 Item 16)
23	–	Bracket (P/O PL 28.1 Item 16)
24	–	Lower Chute (P/O PL 28.1 Item 16)
25	130K88150	Takeaway Sensor
26	110E94770	Top Cover Interlock Switch

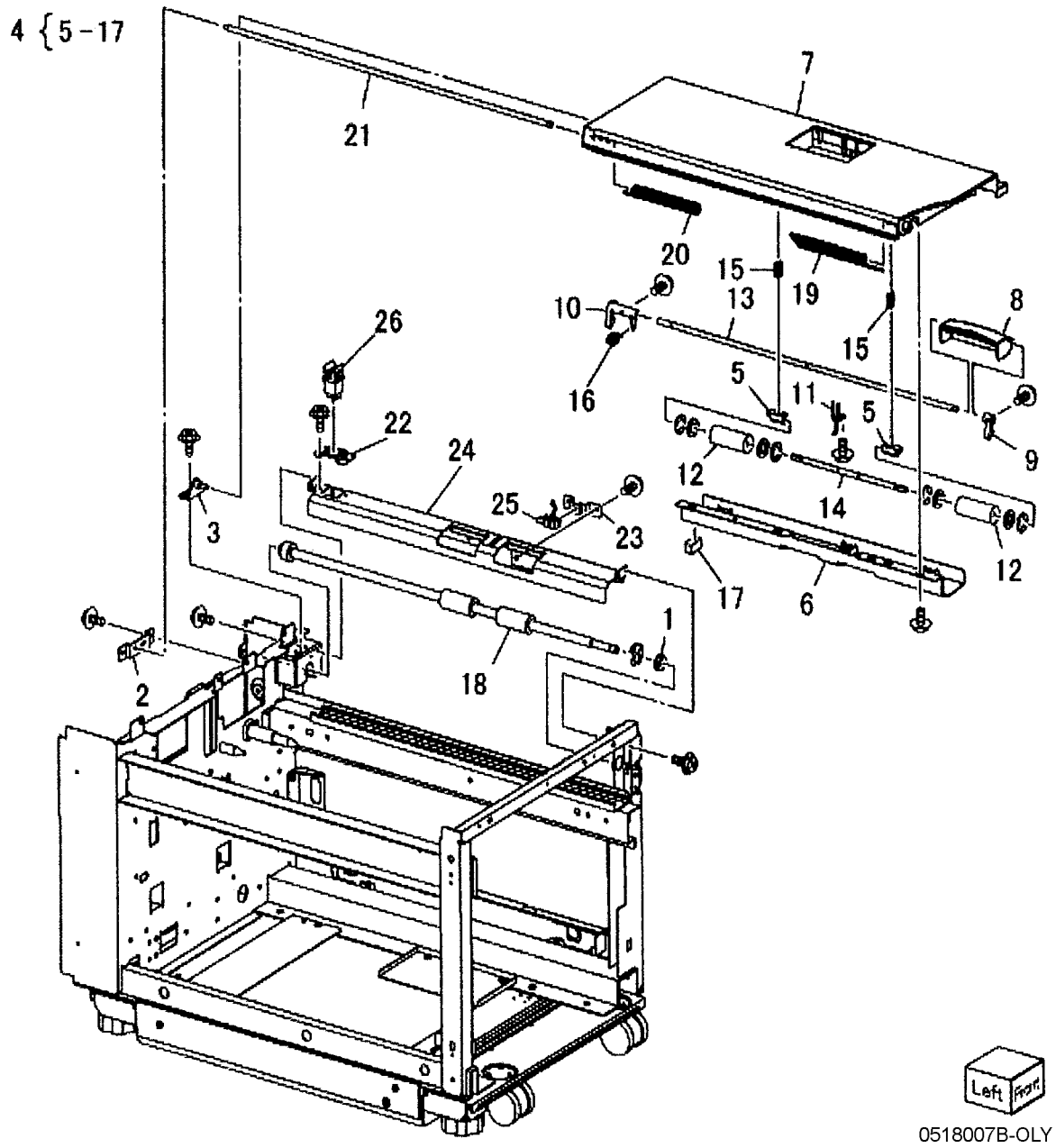

0518007B-OLY

PL 28.8 HCF Electrical and Rail

Item	Part	Description
1	–	Plate (Not Spared)
2	017E92820	Rack Caster (REP 19.9)
3	017E97191	Foot (Not Spared)
4	–	Latch Lever (Not Spared)
5	–	Spring (Not Spared)
6	801K15690	Rail
7	127K47150	Takeaway Motor
8	–	Docking Interlock Switch (Not Spared)
9	960K31492	HCF PWB (REP 19.11)
10	–	Wire Harness (P/O PL 28.1 Item 16)
11	130K55590	HCF Size Sensor R and L
12	–	Bracket (P/O PL 28.1 Item 16)

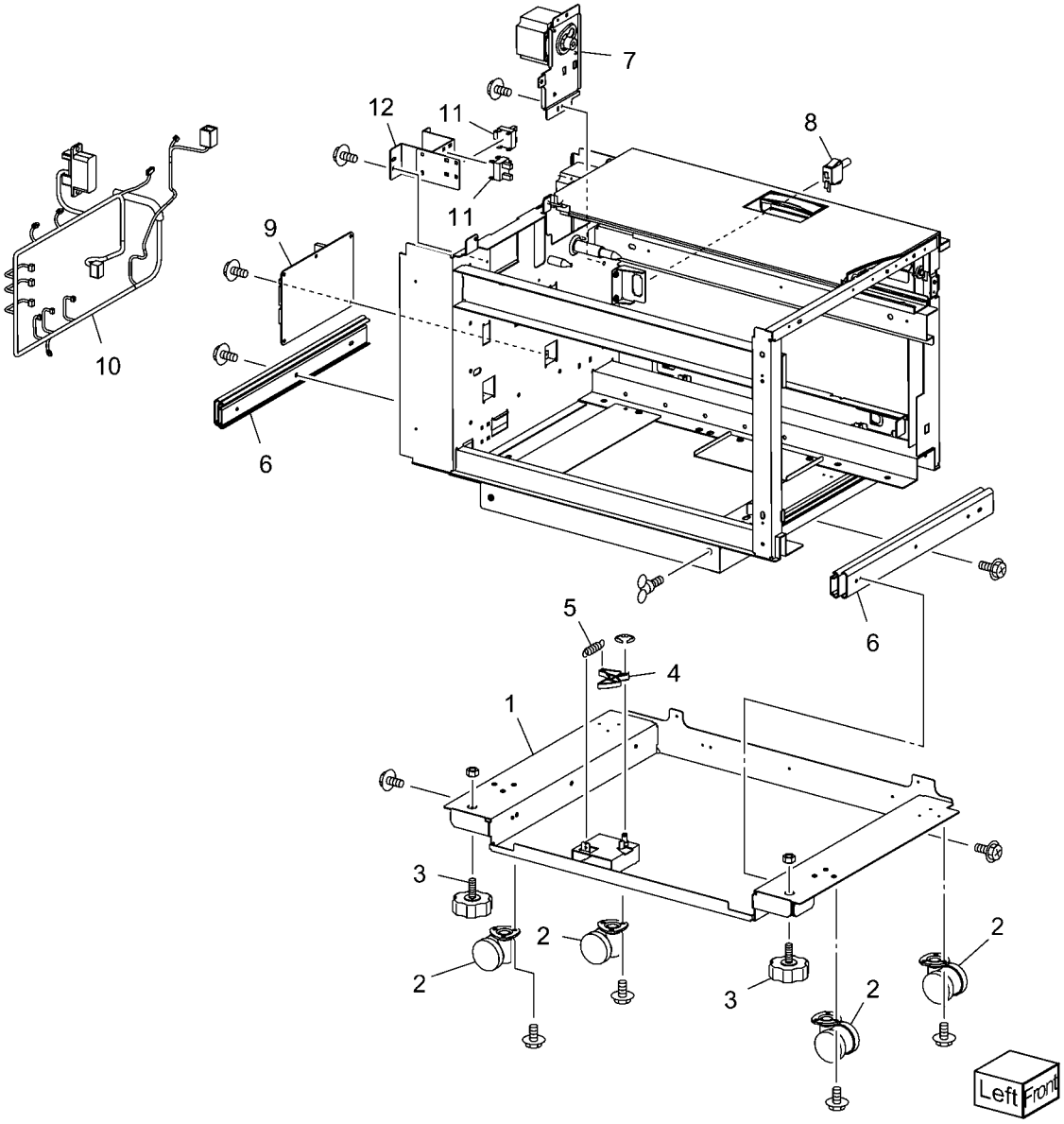

0518008B-OLY

PL 35.1 Single Board Controller (1 of 2)

Item	Part	Description
1	–	Single Board Control Unit (REF: PL 35.2)
2	960K65970	Two Line Fax Assembly
–	960K65960	One Line Fax Assembly
3	848E74310	Fax Safety Cover

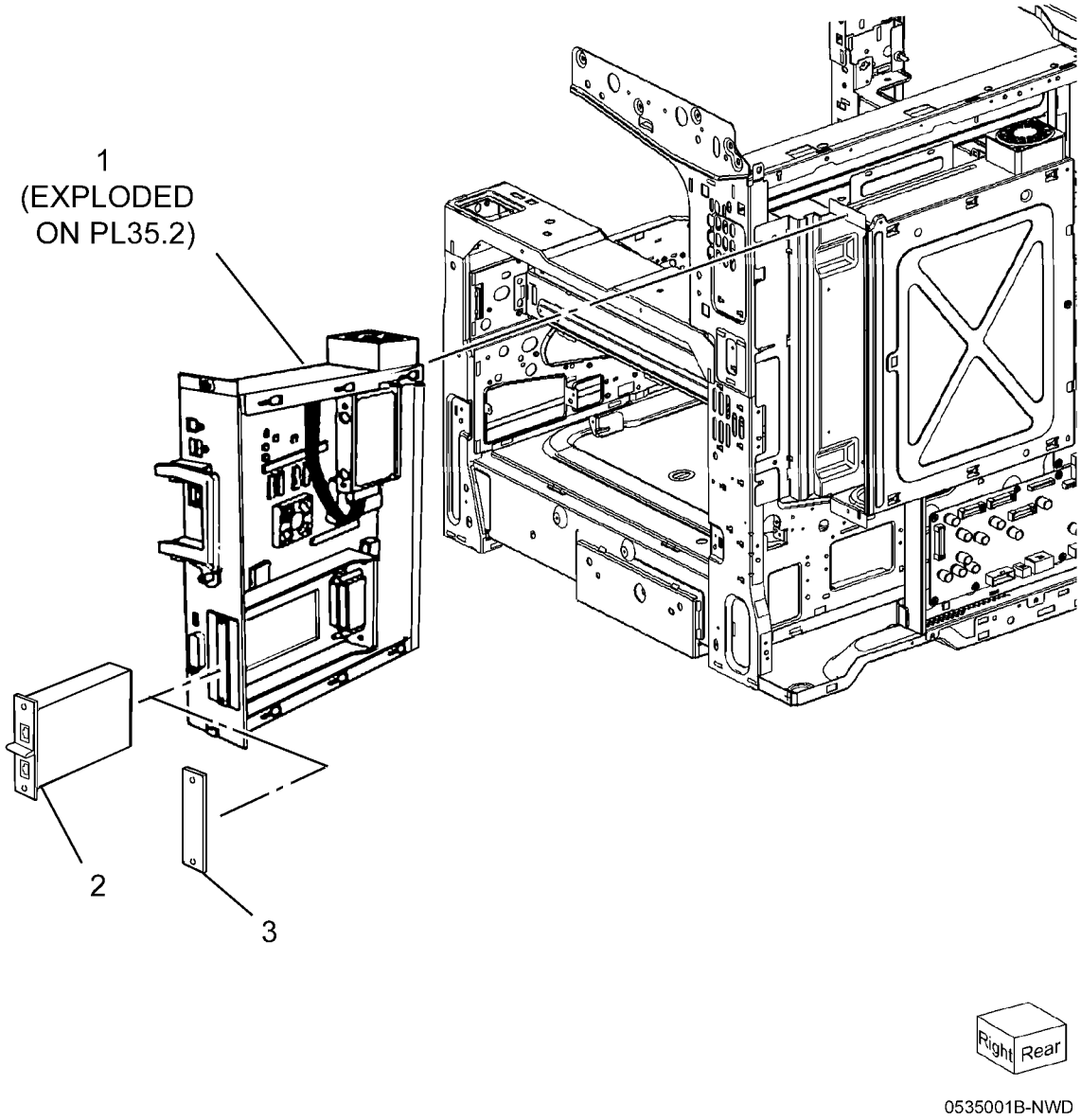

PL 35.2 Single Board Controller (2 of 2)

Item	Part	Description
1	–	Chassis Assembly (Not Spared)
2	121K51073	Hard Drive
–	121K51072	Hard Drive
3	962K40460	SATA/Power Cable Assembly
4	960K66381	Controller PWBA
5	960K59381	Fax Riser PWBA
6	826E39370	Thumb Screw (M4)
7	–	Fax Filler Panel (Not Spared)
8	962K95670	Fax IF Flex Cable
9	960K65323	Flash Module / NVM PWB
–	960K65322	Flash Module / NVM PWB
–	160K99203	Flash Module / NVM PWB
10	–	NVM Battery/RTC (Not Spared)
11	833W39035	System Memory (2GB)
12	137E30390	EPC Memory (1GB)
13	962K41361	FDI Internal Cable

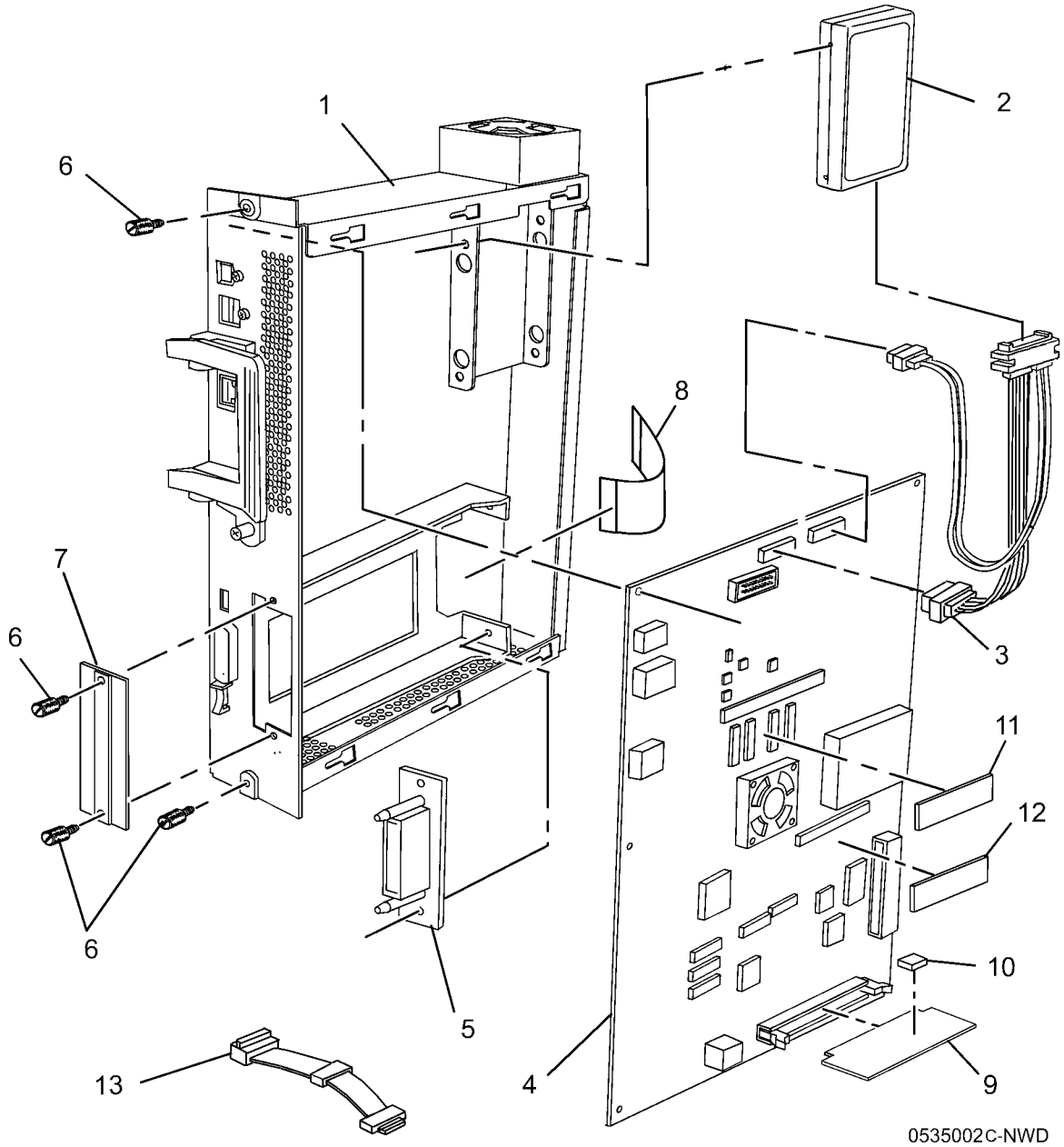

PL 51.1 DADF Accessory

Item	Part	Description
1	–	DADF Platen Cushion (Not Spared) (REP 5.2)
2	059K69247	DADF Assembly (REP 5.1)
3	–	Label (Not Spared)

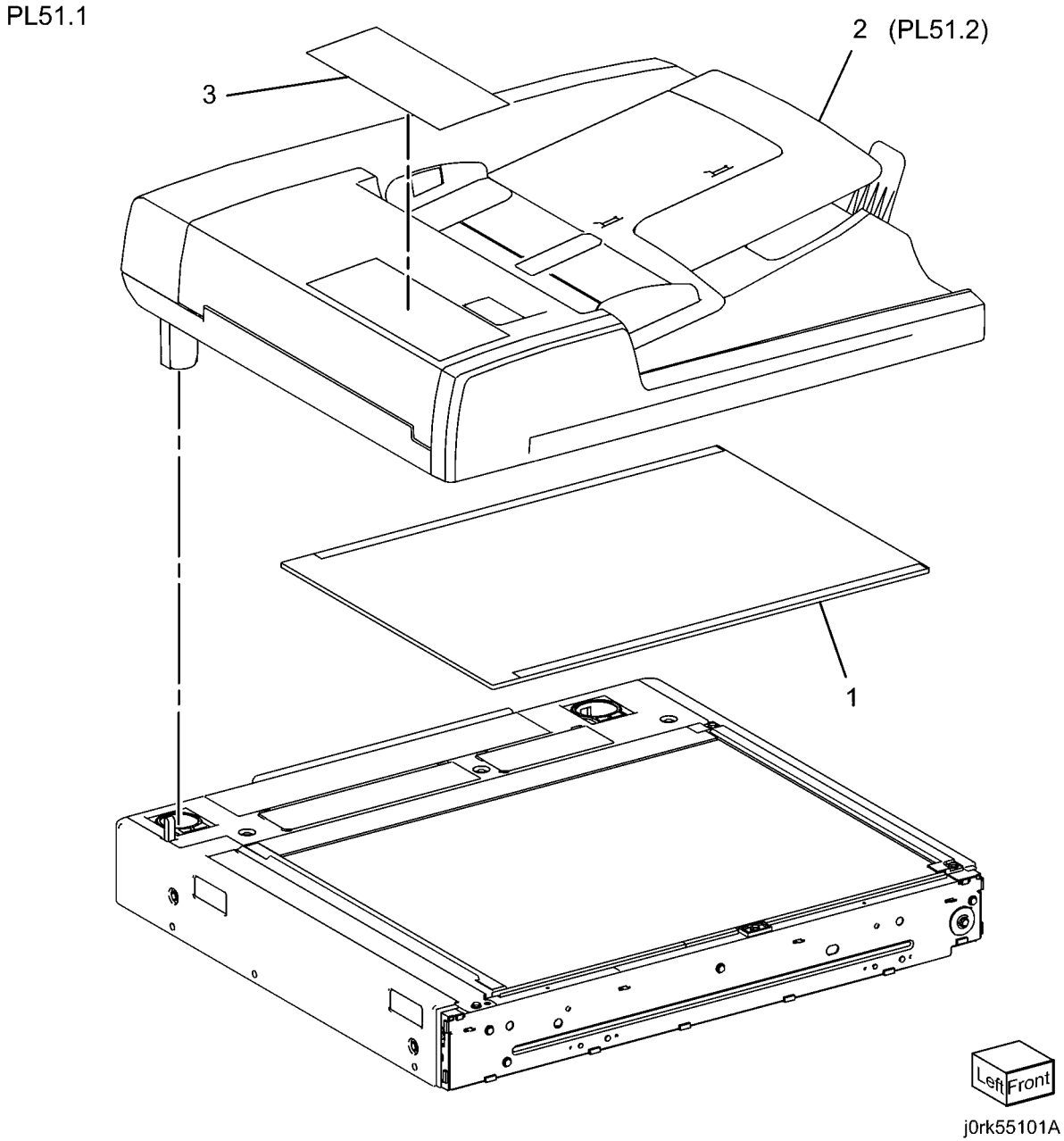

PL 51.2 Covers, PWB

Item	Part	Description
1	–	Base Frame (P/O PL 51.1 Item 2)
2	059K65137	Feeder Assembly (P/O PL 51.1 Item 2) (REP 5.5)
3	–	Rear Cover (P/O PL 51.1 Item 2) (REP 5.4)
4	–	Front Cover (P/O PL 51.1 Item 2) (REP 5.3)
5	117E27450	IIT DADF Cable
6	960K47307	DADF PWB (REP 5.6)
7	–	Wire Harness (P/O PL 51.1 Item 2)
8	–	Data Plate (P/O PL 51.1 Item 2)
9	003K87870	Stopper
10	–	P Clamp (P/O PL 51.1 Item 2)
11	–	Bracket (P/O PL 51.1 Item 2)
12	–	Knob Label (Not Spared)

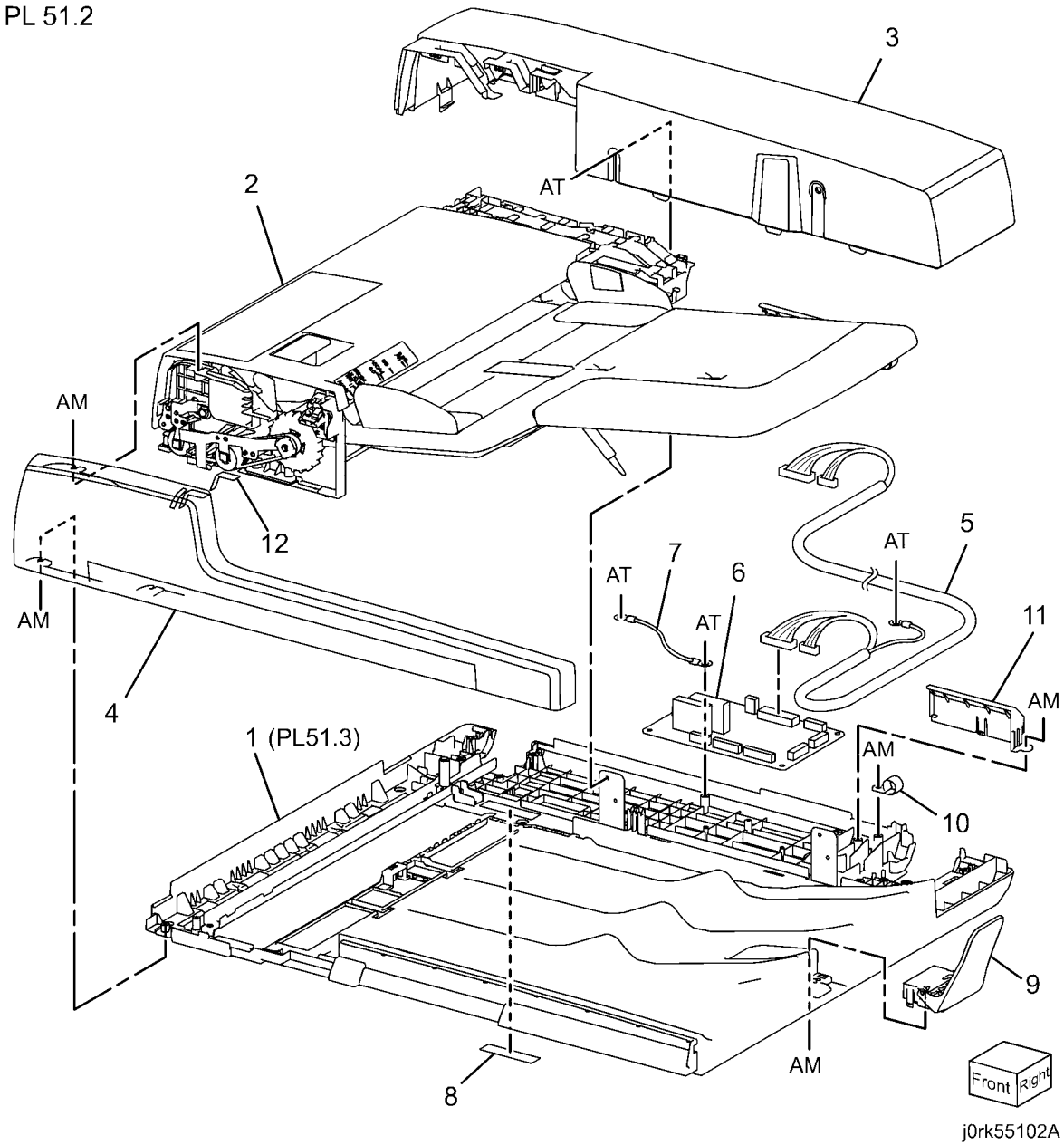

PL 51.3 Base Frame

Item	Part	Description
1	–	Frame (P/O PL 51.1 Item 2)
2	036K91874	Left Counter Balance (REP 5.7)
3	036K91883	Right Counter Balance (REP 5.8)
4	–	Tie Plate (P/O PL 51.1 Item 2)
5	054K41230	CVT Chute
6	826E45980	Stud Screw
7	–	Ground Plate (P/O PL 51.1 Item 2)
8	–	CVT Spring (Not Spared)
9	019E73462	Floating Holder
10	809E89310	Floating Spring
11	–	Bracket (P/O PL 51.1 Item 2)

PL51.3

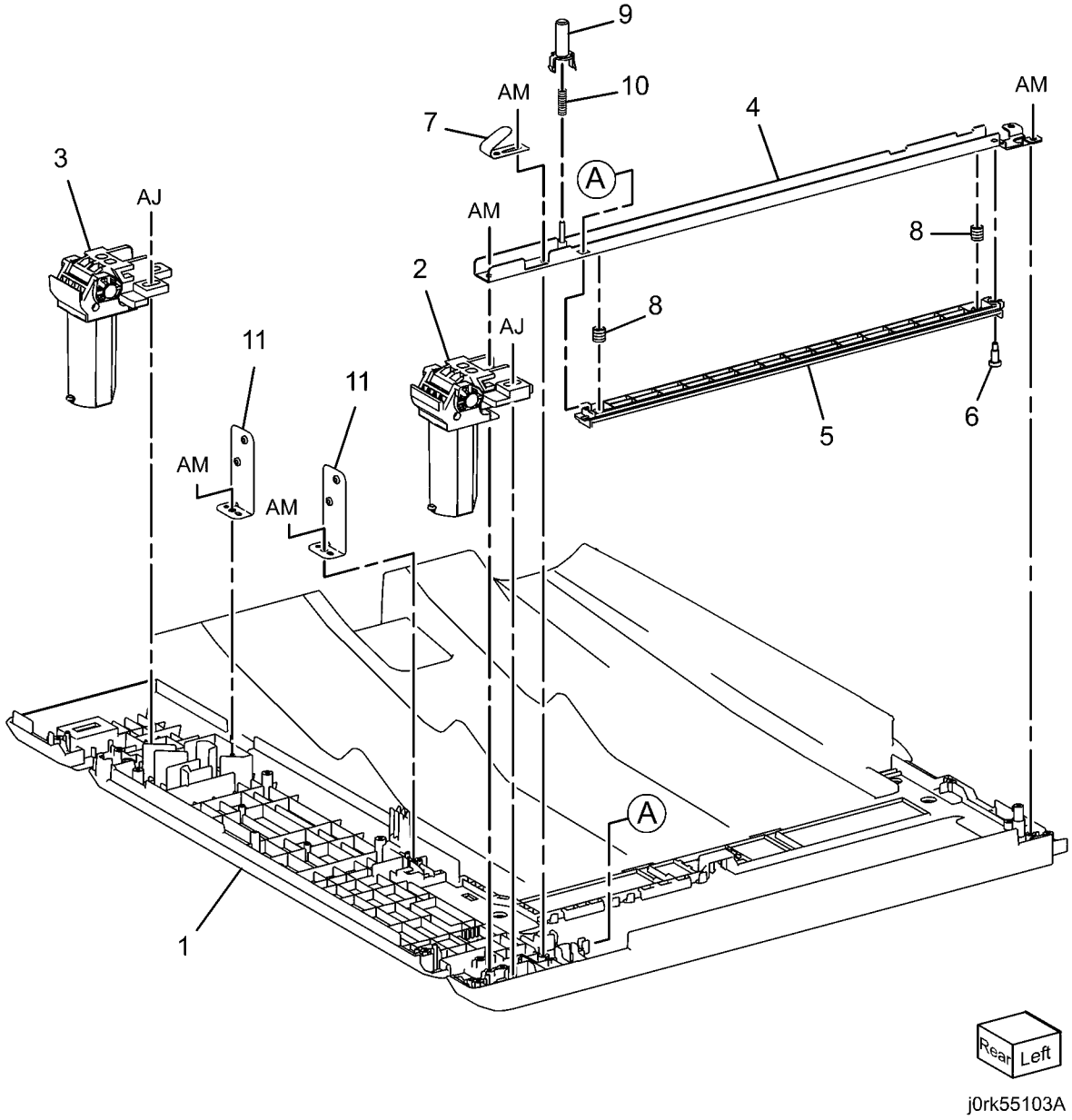

PL 51.4 Document Tray

Item	Part	Description
1	050K64253	Document Tray Assembly (REP 5.9)
2	059K65064	Top Cover (REP 5.10)
3	–	Stud Bracket (P/O PL 51.1 Item 2)

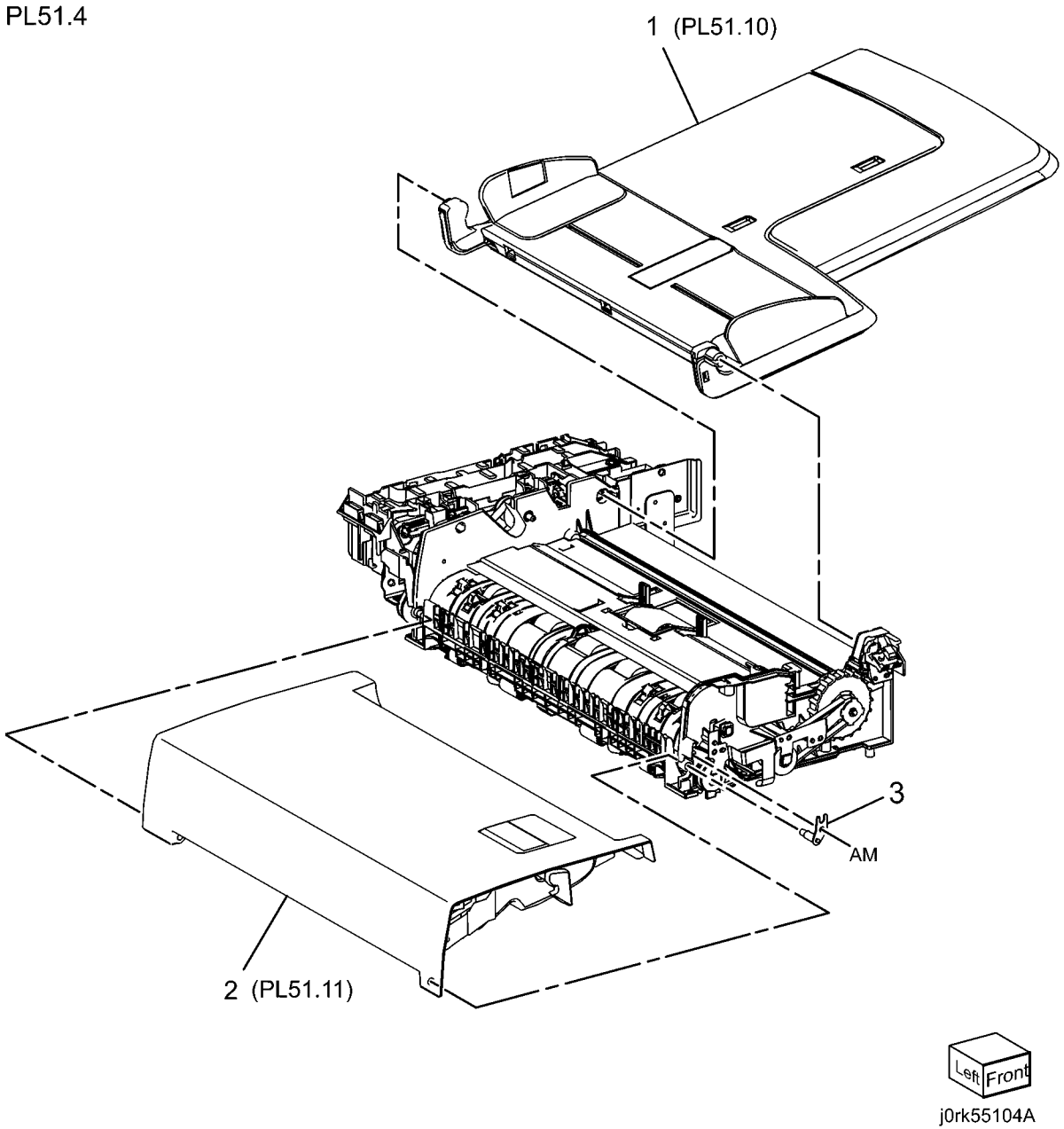

PL 51.5 DADF Drives (1 of 2)

Item	Part	Description
1	032E32642	Harness Guide (REP 5.11)
2	110K15932	Interlock Switch and Harness Assembly
3	–	Bracket (P/O PL 51.5 Item 2)
4	–	Interlock Switch (P/O PL 51.5 Item 2)
5	–	Spring (P/O PL 51.5 Item 2)
6	–	Switch Wire Harness (P/O PL 51.5 Item 2)
7	127K60530	Feed Motor (REP 5.13)
8	127K60550	Registration Motor (REP 5.12)
9	809E50763	Spring
10	809E91390	Spring
11	–	Bracket (P/O PL 51.1 Item 2)
12	–	Bracket (P/O PL 51.1 Item 2)
13	–	Feeder Wire Harness (P/O PL 51.1 Item 2)
14	–	Motor Wire Harness (P/O PL 51.1 Item 2)
15	–	APS Wire Harness (Not Spared)
16	–	Connector (Not Spared)
17	–	Connector (Not Spared)

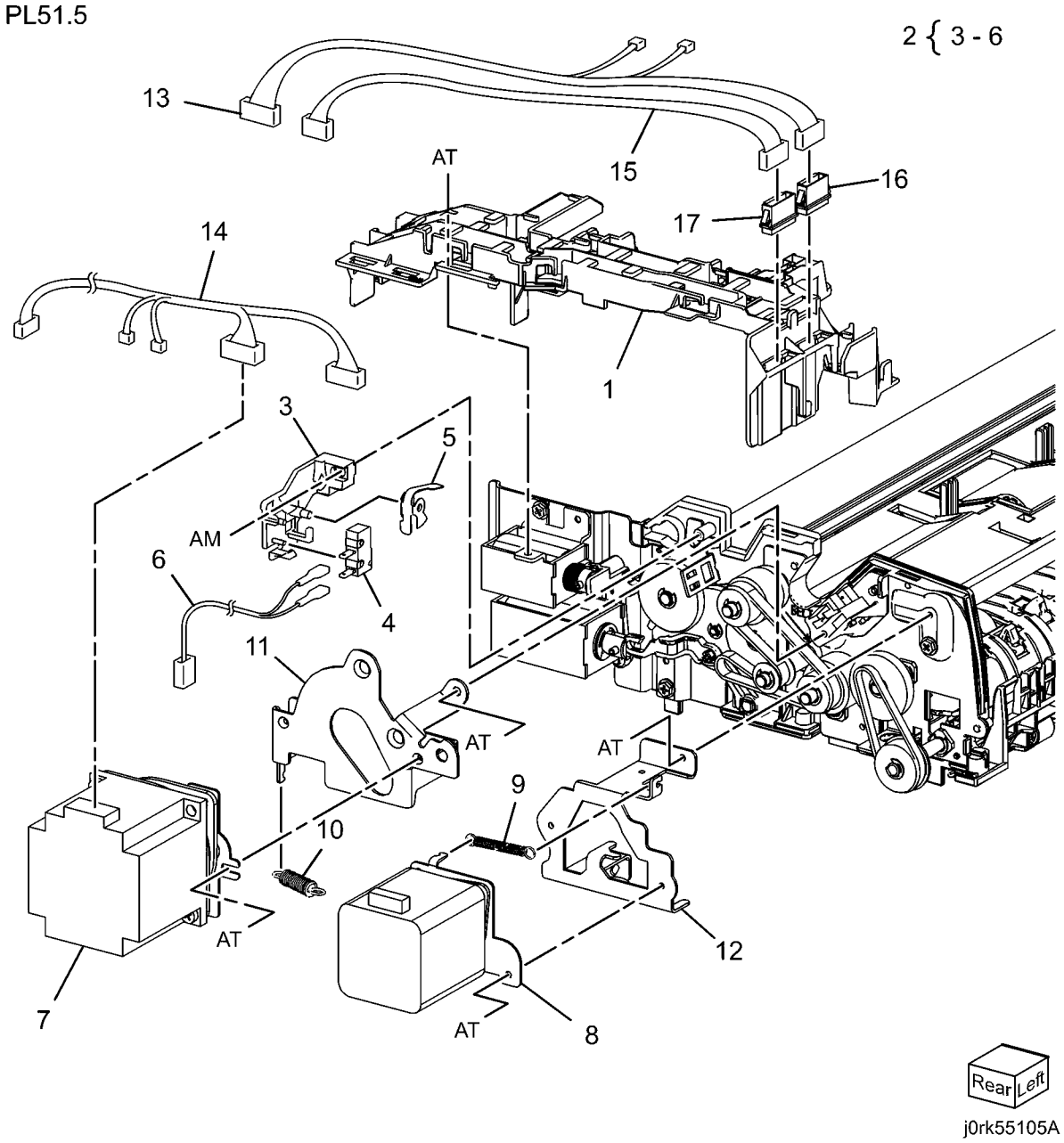

PL 51.6 DADF Drives (2 of 2)

Item	Part	Description
1	011E22861	Nip Lever
2	–	Stopper Link (Not Spared)
3	012E17161	Release Link
4	019K10320	Brake
5	020E46551	Registration Roll Pulley
6	020E46561	Pulley Gear
7	020E46571	Pulley Gear
8	059E98620	Roll
9	121K46620	Gate Solenoid
10	–	Gate Solenoid (P/O PL 51.6 Item 9)
11	–	Cushion (P/O PL 51.6 Item 9)
12	121K43660	Exit Nip Release Solenoid
13	130K73000	Feed Out Sensor Assembly
14	–	Sensor Bracket (P/O PL 51.6 Item 13)
15	930W00121	Feed Out Sensor, Document Set Sensor
16	423W06555	Belt
17	423W31554	Belt
18	807E26971	Gear
19	807E26981	Exit Roll Gear
20	807E26991	Gear
21	807E27011	Take Away Roll Gear
22	809E86320	Spring

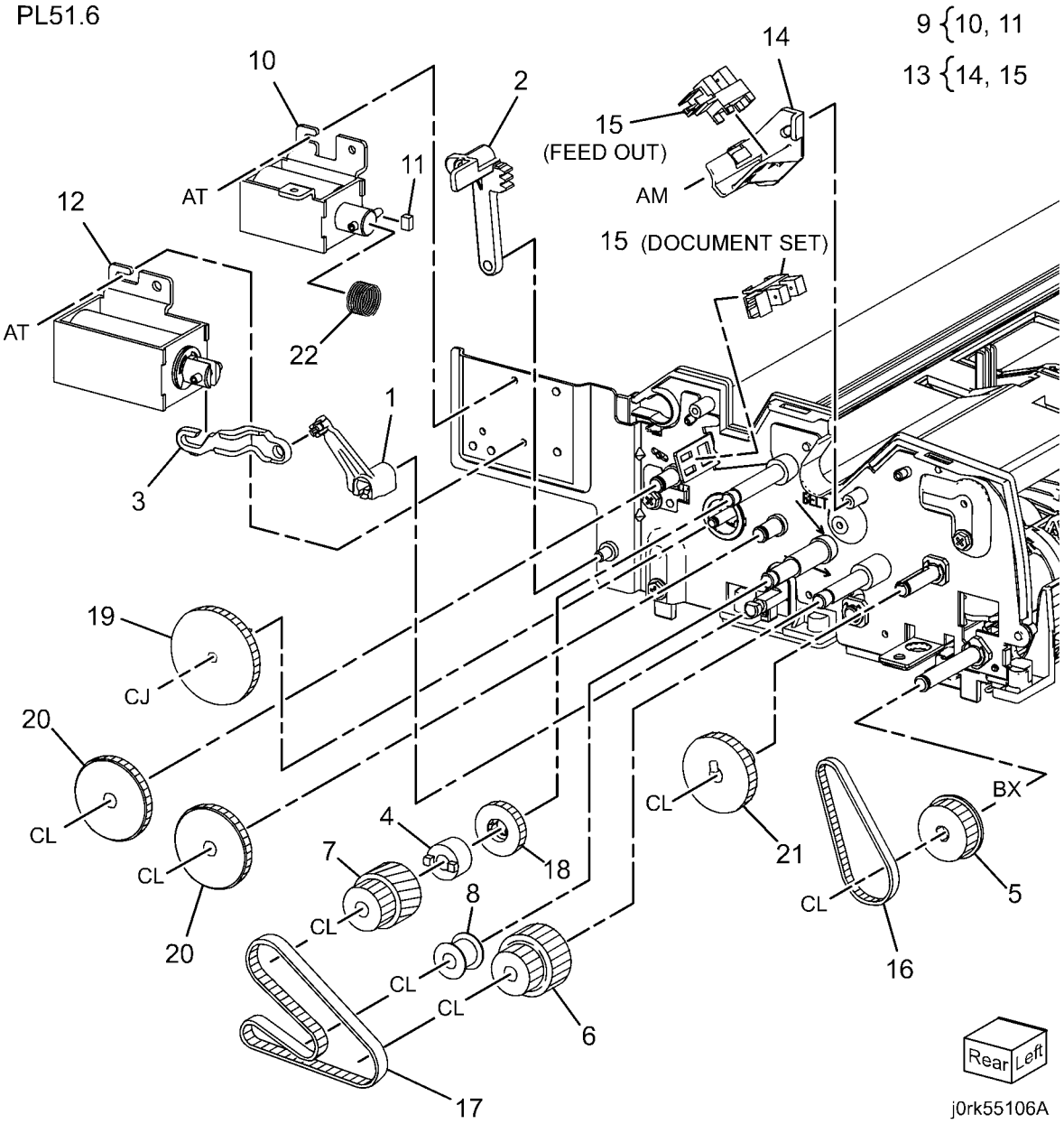

PL 51.7 Front Belt

Item	Part	Description
1	020E46540	Out Roll Pulley
2	020E46551	Registration Roll Pulley
3	423W08855	Belt
–	423W08854	Belt (Alternate)
4	–	Belt (Not Spared)
5	803E02200	Knob Handle
6	–	Ground Plate (Not Spared)
7	960K48840	Document LED Set
8	–	LED Bracket (P/O PL 51.7 Item 7)
9	–	Document LED (P/O PL 51.7 Item 7)

PL51.7

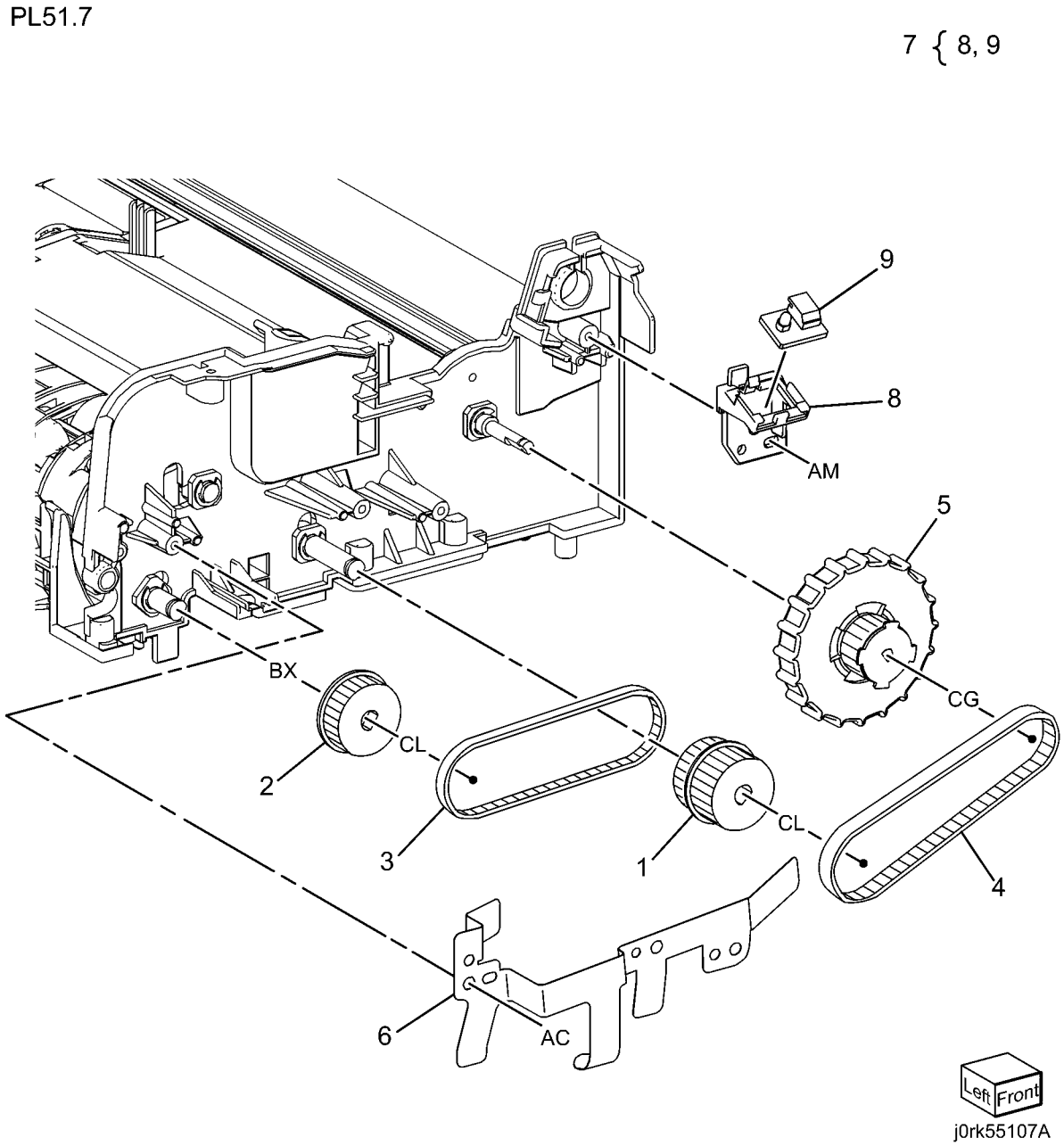

PL 51.8 Registration, Retard, Invert, Output Chutes

Item	Part	Description
1	054K39700	Registration Chute (REP 5.14)
2	054K44171	Retard Chute (REP 5.15)
3	054K41044	Invert Chute
4	054K41050	Output Chute
5	–	Stamp Solenoid (Not Spared)

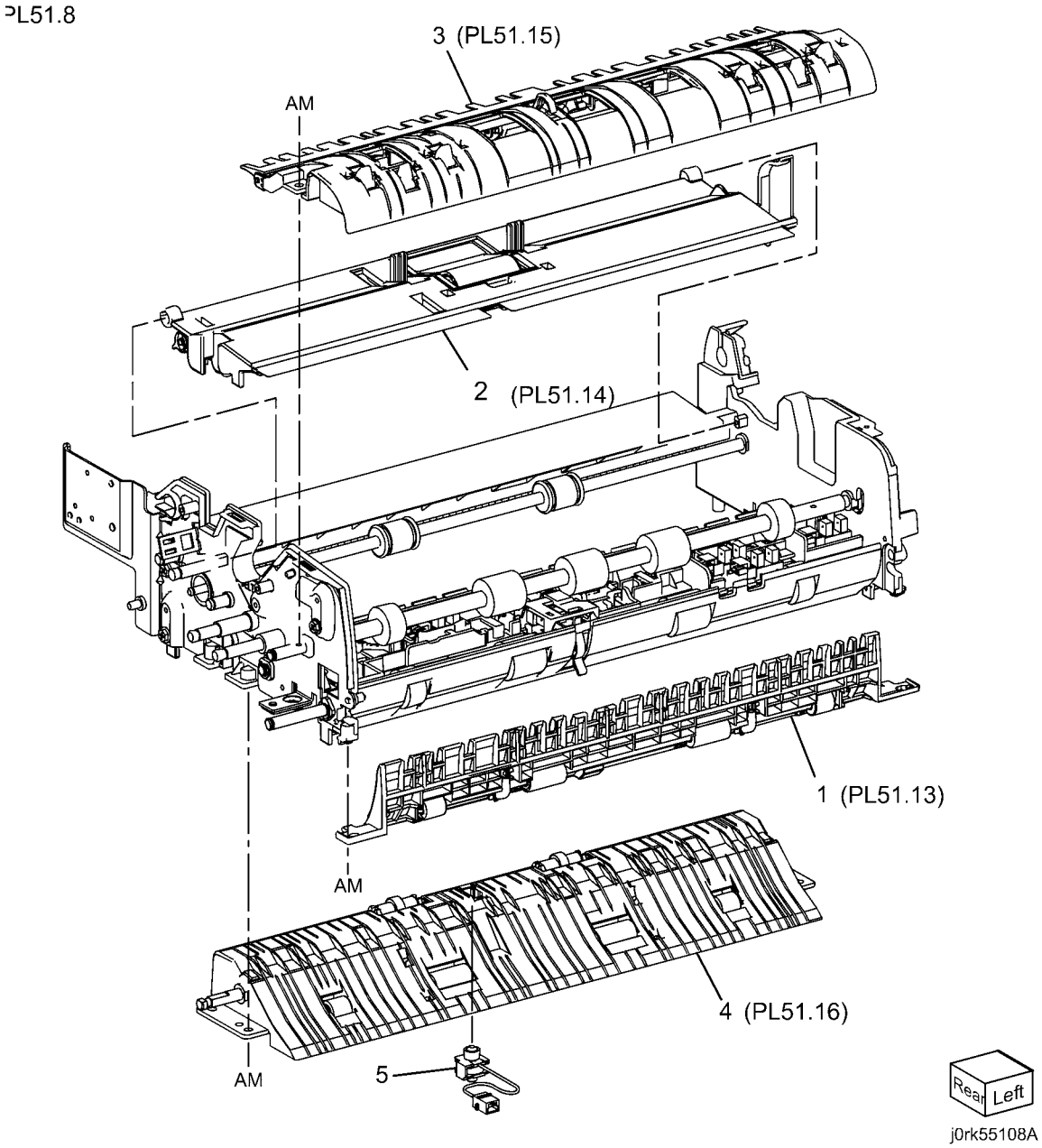

PL 51.9 Roll, Sensor Bracket

Item	Part	Description
1	–	Bearing (Not Spared)
2	059K65081	Registration Roll
3	–	Take Away Roll (Not Spared) (REP 5.16)
4	–	Output Roll (Not Spared)
5	–	Exit Roll (Not Spared)
6	068K69460	Sensor Bracket Assembly (REP 5.17)
7	–	Bearing (Not Spared)
8	930W00121	Invert Sensor

PL51.9

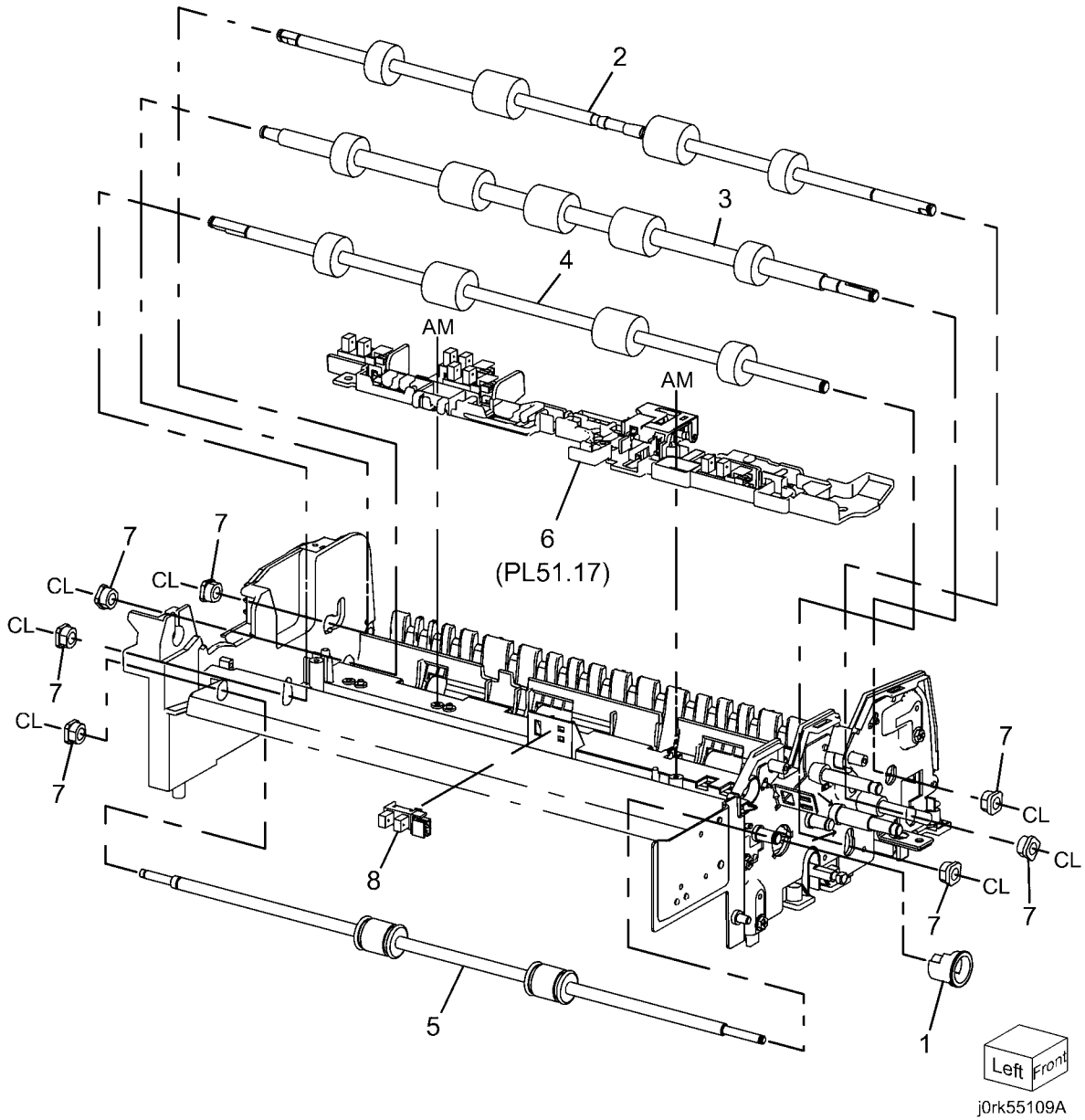

PL 51.10 Document Tray

Item	Part	Description
1	–	Sensor Bracket (P/O PL 51.4 Item 1)
2	930W00121	Tray Guide Set Sensor 1, Sensor 2, Sensor 3
3	–	Tray Cover (P/O PL 51.4 Item 1)
4	–	Tray Wire Harness (P/O PL 51.4 Item 1)
5	032K05861	Guide
6	–	Max Label (Not Spared)
7	–	Harness Cover (P/O PL 51.4 Item 1)
8	–	Harness Cover (P/O PL 51.4 Item 1)
9	–	Front Gear Rack (P/O PL 51.4 Item 1)
10	–	Rear Gear Rack (P/O PL 51.4 Item 1)
11	930W00241	Size Sensor 1, Size Sensor 2
12	–	Instruction Label (Not Spared)
13	–	Rack Spring (P/O PL 51.4 Item 1)
14	–	Pinion Gear (P/O PL 51.4 Item 1)
15	–	Rear Side Guide (P/O PL 51.4 Item 1)
16	–	Front Side Guide (P/O PL 51.4 Item 1)
17	–	Upper Tray (P/O PL 51.4 Item 1)

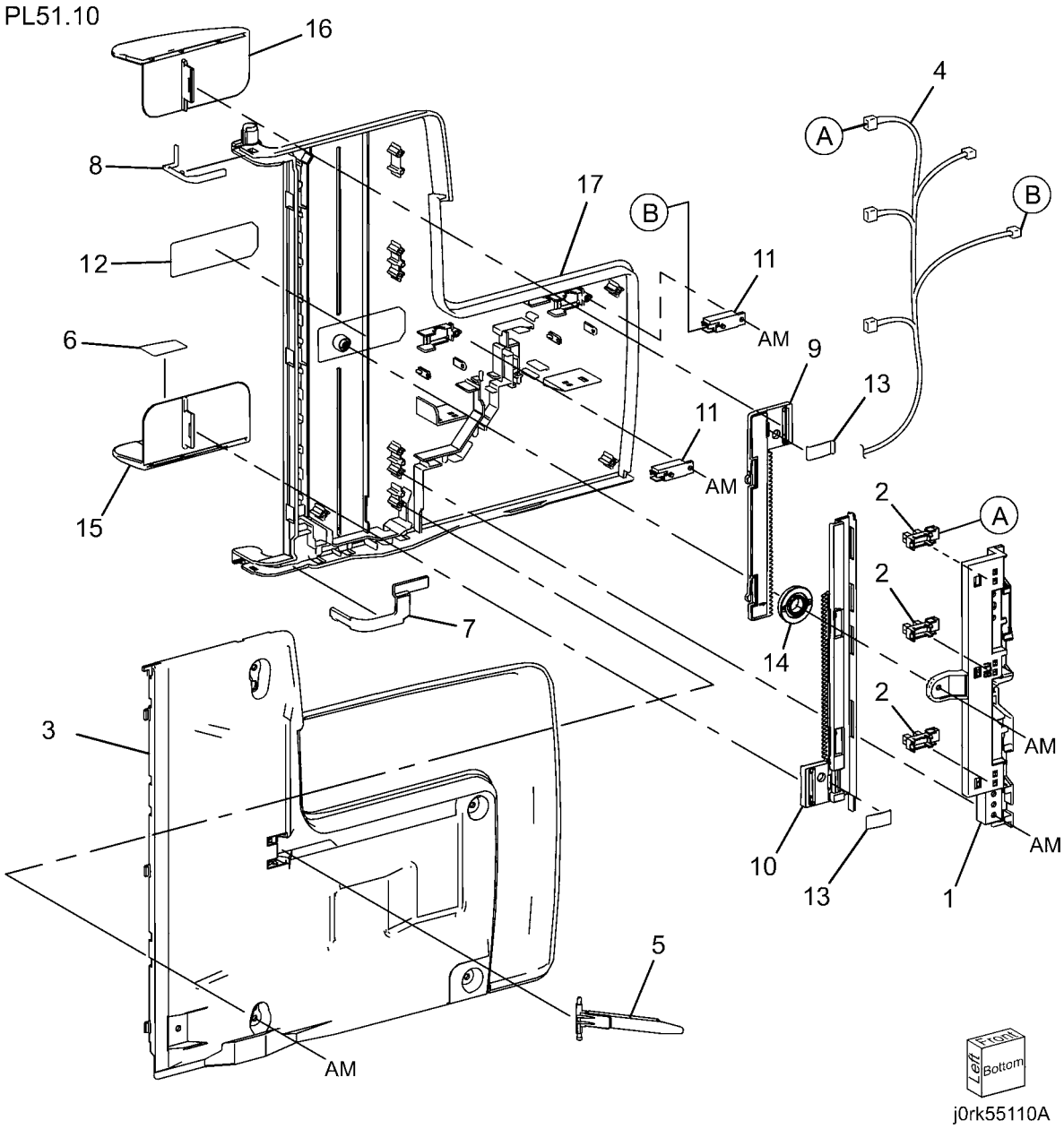

PL 51.11 Top Cover

Item	Part	Description
1	–	Top Cover (P/O PL 51.4 Item 2)
2	–	Upper Feed Chute (P/O PL 51.4 Item 2)
3	059K65070	Upper Feeder (REP 5.5)
4	011K03520	Lever Latch
5	059K61230	Take Away Pinch Roll
6	120K92500	Document Set Actuator
7	120E32200	Feed Out Actuator
8	–	Bracket (P/O PL 51.4 Item 2)
9	–	Ground Plate (P/O PL 51.4 Item 2)
10	897E24010	Size Label
11	897E24000	Jam Label
12	–	Spring (Not Spared)
13	–	Spring (Not Spared)
14	–	Spring (Not Spared)

PL51.11

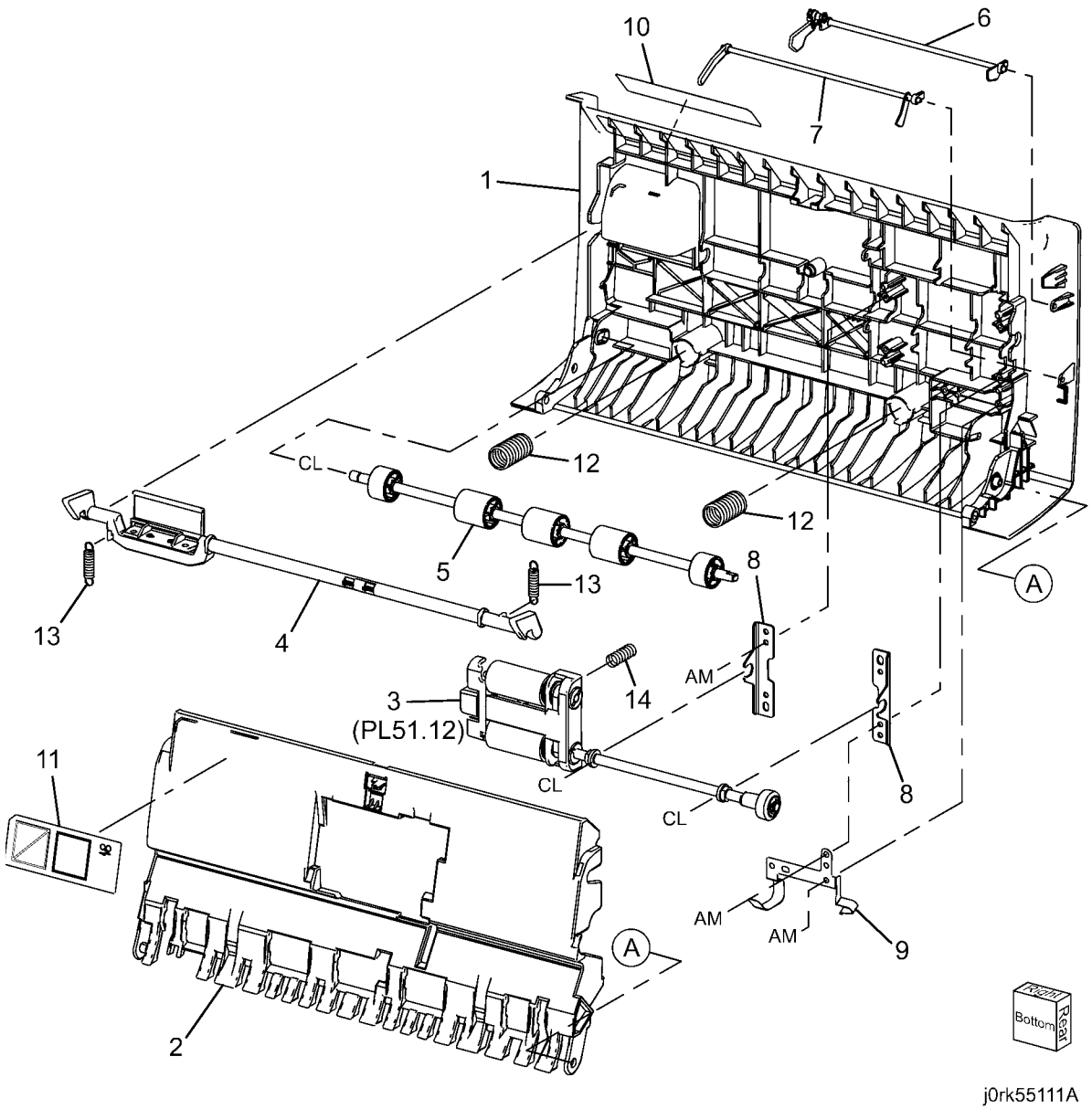

PL 51.12 Upper Feeder

Item	Part	Description
1	–	Housing (P/O PL 51.11 Item 3)
2	–	Feeder Pulley (P/O PL 51.12 Item 3)
3	–	Nudger Pulley (P/O PL 51.11 Item 3)
4	–	Belt (P/O PL 51.11 Item 3)
5	–	Feed Shaft (P/O PL 51.11 Item 3)
6	–	Nudger Shaft (P/O PL 51.11 Item 3)
7	–	Feed Roll, Nudger Roll (P/O PL 51.12 Item 11) (REP 5.18)
8	–	Bearing (P/O PL 51.11 Item 3)
9	–	Housing (P/O PL 51.12 Item 11)
10	–	Gear (P/O PL 51.11 Item 3)
11	604K58410	DADF Feed Roll Kit

PL51.12

11 { 7, 9, PL51.14 Items 5, 10

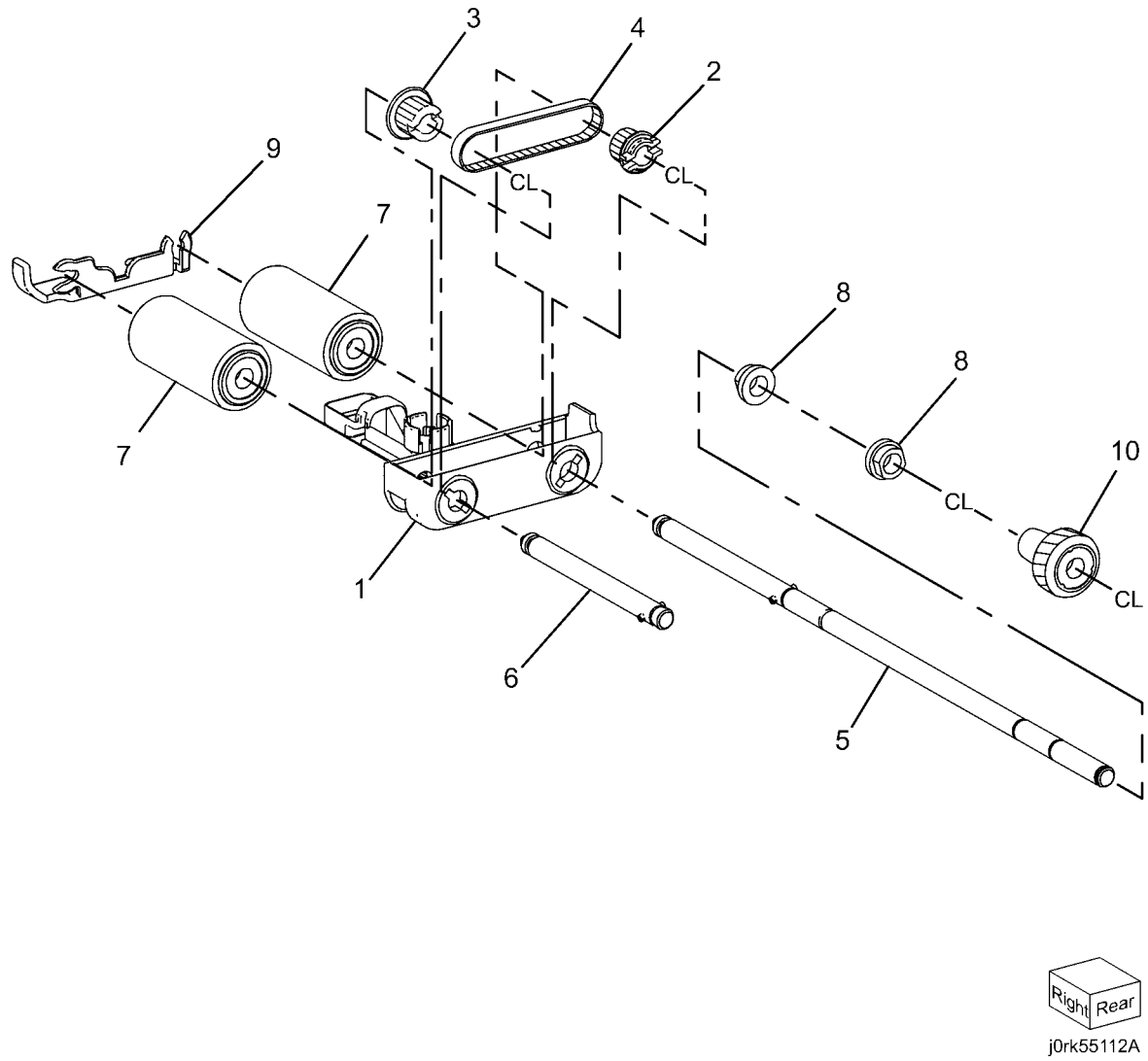

PL 51.13 Registration Chute

Item	Part	Description
1	–	Registration Chute (P/O PL 51.8 Item 1)
2	–	Pinch Shaft (P/O PL 51.8 Item 1)
3	–	Registration Wide Pinch Roll (P/O PL 51.8 Item 1)
4	–	Registration Short Pinch Roll (P/O PL 51.8 Item 1)
5	–	Seal (P/O PL 51.8 Item 1)
6	–	Seal (P/O PL 51.8 Item 1)
7	–	Spring (P/O PL 51.8 Item 1)

PL51.13

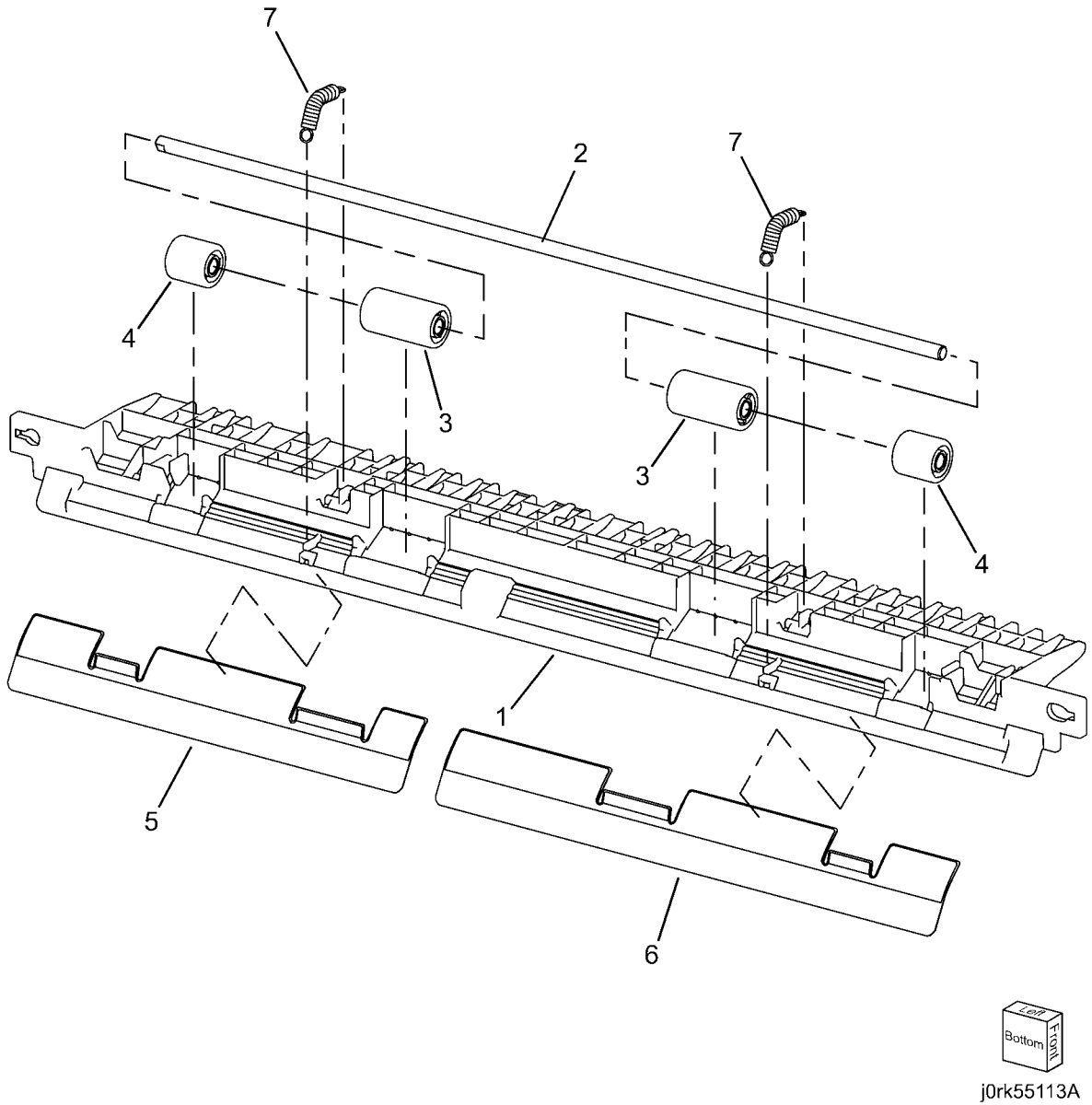

PL 51.14 Retard Chute

Item	Part	Description
1	–	Chute (P/O PL 51.8 Item 2)
2	–	Set Gate (P/O PL 51.8 Item 2)
3	–	Housing (P/O PL 51.8 Item 2)
4	–	Spring (P/O PL 51.8 Item 2)
5	–	Retard Roll (REP 5.19)
6	848K43600	Retard Roll Cover (P/O PL 51.12 Item 11)
7	–	Seal (P/O PL 51.8 Item 2)
8	–	Seal (P/O PL 51.8 Item 2)
9	–	Label (P/O PL 51.8 Item 2)
10	–	Shaft (P/O PL 51.12 Item 11)
11	–	Pad (P/O PL 51.8 Item 2)

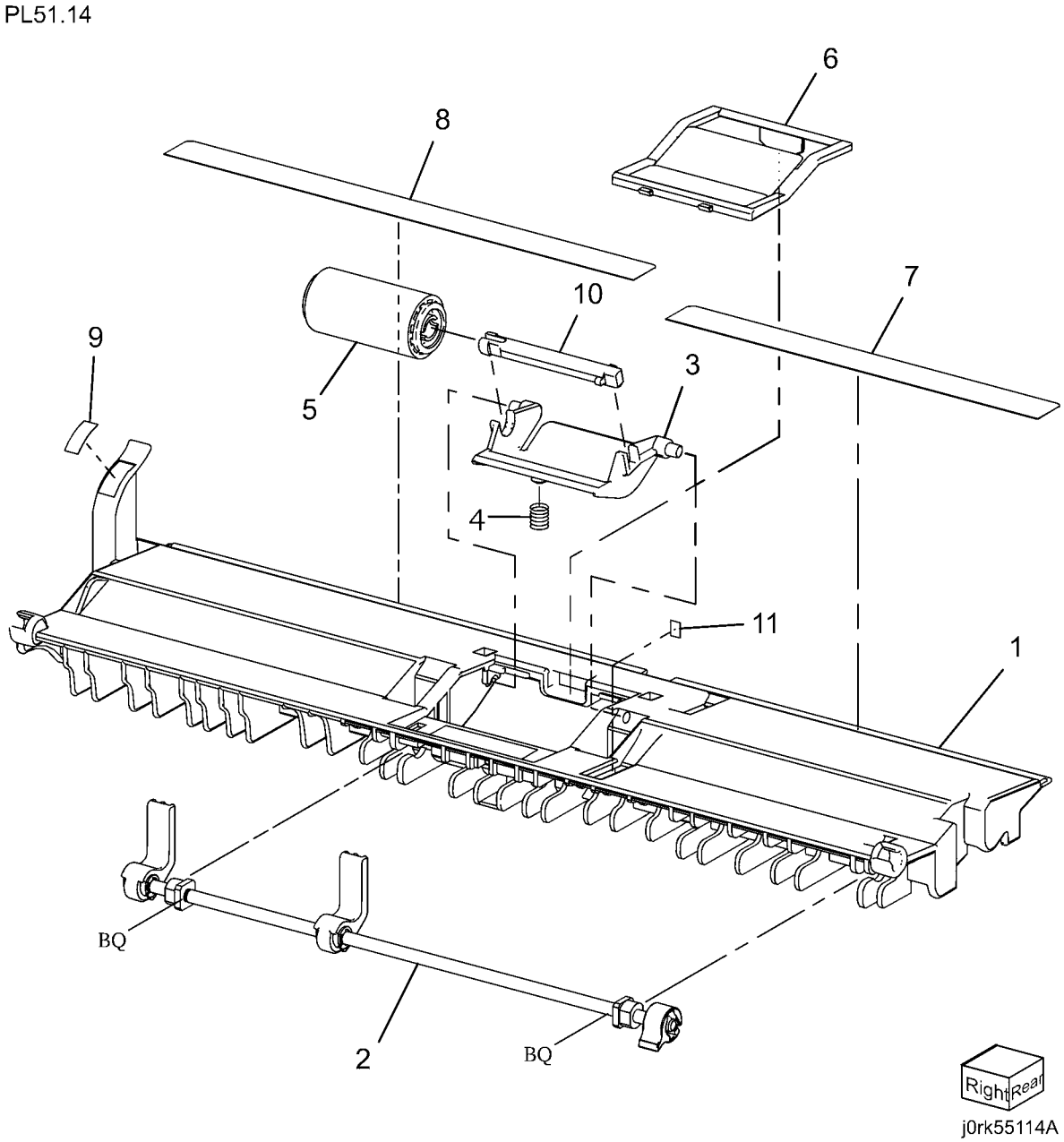

PL 51.15 Invert Chute

Item	Part	Description
1	–	Invert Chute (P/O PL 51.8 Item 3)
2	–	Pre Registration Actuator (P/O PL 51.8 Item 3)
3	–	Actuator (Aps 1) (P/O PL 51.8 Item 3)
4	–	Actuator (Aps 2) (P/O PL 51.8 Item 3)
5	–	Actuator (Aps 2) (P/O PL 51.8 Item 3)
6	–	Actuator (Aps 3) (P/O PL 51.8 Item 3)
7	–	Invert Actuator (P/O PL 51.8 Item 3)
8	–	Invert Gate (P/O PL 51.8 Item 3)
9	–	Spring (P/O PL 51.8 Item 3)
10	–	Spring (P/O PL 51.8 Item 3)
11	–	Seal (P/O PL 51.8 Item 3)
12	–	Seal (P/O PL 51.8 Item 3)
13	–	Pad (P/O PL 51.8 Item 3)

PL 51.15

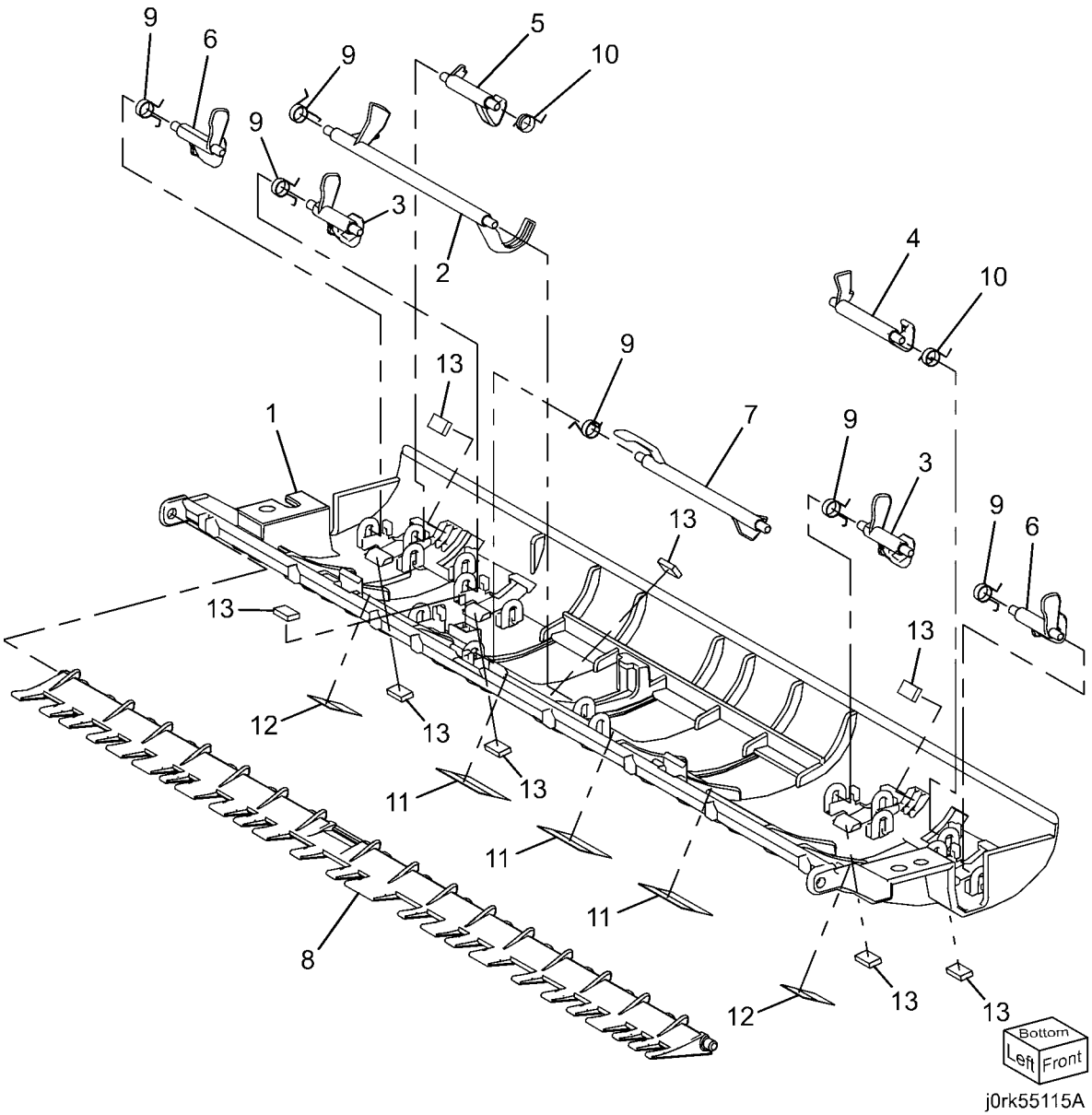

PL 51.16 Output Chute

Item	Part	Description
1	–	Chute (P/O PL 51.8 Item 4)
2	–	Exit Pinch Roll (P/O PL 51.8 Item 4)
3	–	Pinch Shaft (P/O PL 51.8 Item 4)
4	–	Wide Registration Pinch Roll (P/O PL 51.8 Item 4)
5	–	Short Registration Pinch Roll (P/O PL 51.8 Item 4)
6	–	Spring (P/O PL 51.8 Item 4)
7	–	Spring (P/O PL 51.8 Item 4)
8	–	Bearing (P/O PL 51.8 Item 4)
9	–	Pad (P/O PL 51.8 Item 4)

PL51.16

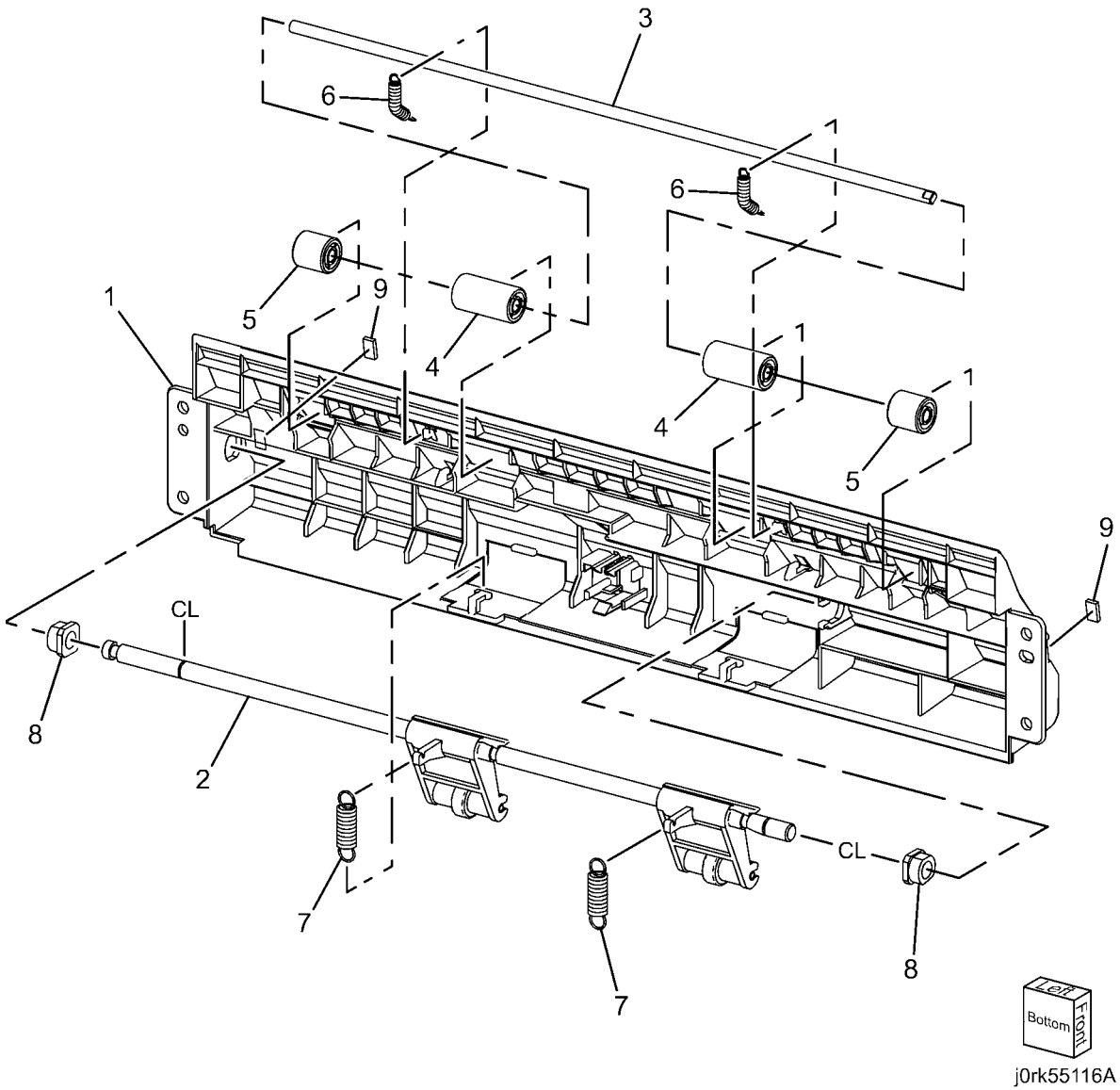

PL 51.17 Sensor Bracket

Item	Part	Description
1	–	Sensor Housing (P/O PL 51.4 Item 1)
2	120E31741	Registration Actuator
3	–	Spring (P/O PL 51.4 Item 1)
4	–	Sensor Guide (P/O PL 51.4 Item 1)
5	–	Wire Harness (Not Spared)
6	930W00121	APS Sensor 1, APS Sensor 2, APS Sensor 3, Registration Sensor, Pre Registration Sensor

PL51.17

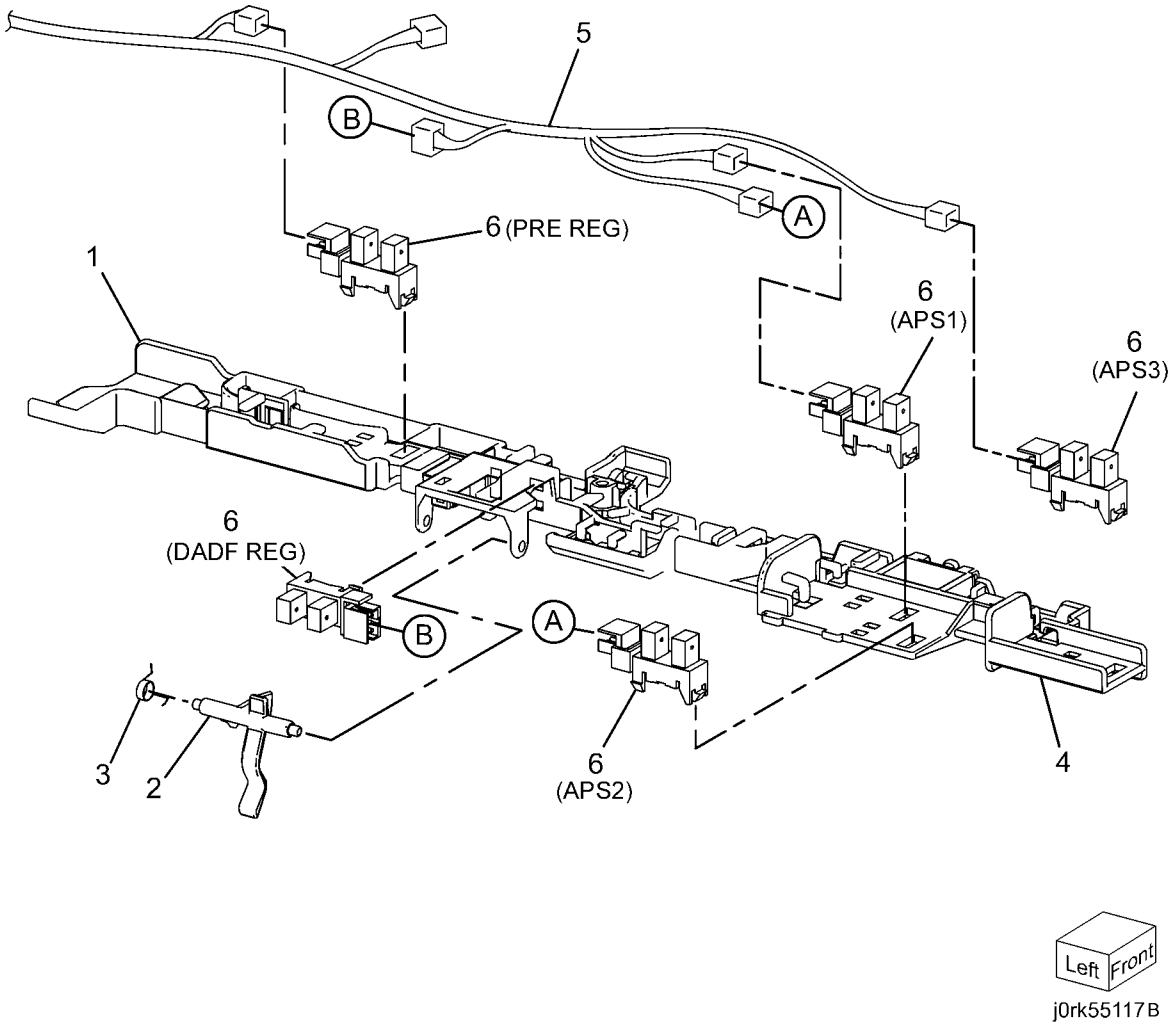

Common Hardware

Item	Part	Description
A	112W27677	Sems Screw (M3x6)
B	112W27678	Sems Screw (M3x6)
C	112W27898	Screw (M3x8)
D	112W28098	Sems Screw (M3x10)
E	113W15588	Pan Head Screw (M2x5)
F	113W16088	Screw (M2x10)
G	113W20478	Tapping Screw (M3x4)
H	113W20677	Screw (M3x6)
J	113W20678	Screw (M3x6)
K	113W20688	Pan Head Screw (M2.5x6)
L	113W20878	Screw (M3x8)
M	113W21078	Screw (M3x10)
N	113W21278	Screw (M3x12)
P	113W21478	Screw
Q	113W27488	Pan Head Screw (M3x4)
R	113W27588	Pan Head Screw (M3x5)
S	113W27688	Pan Head Screw (M3x6)
T	113W27888	Pan Head Screw (M3x8)
U	113W35878	Screw (M4x8)
V	113W35888	Pan Head Screw (M4x8)
W	114W27678	Bind Head Screw (M3x6)
X	141W27451	Set Screw (M3x4)
Y	141W35651	Set Screw (M4x6)
Z	153W15888	Tapping Screw (M4x8)
AA	153W16288	Tapping Screw (M4x12)
AB	153W17688	Tapping Screw (M3x6)
AC	153W17888	Tapping Screw (M3x8)
AD	153W18088	Tapping Screw (M3x10)
AE	153W27878	Tapping Screw (M3x8)
AF	153W28078	Tapping Screw (M3x10)
AG	158W27678	Screw
AH	158W27688	Round Screw (M3x7)
AJ	158W27878	Screw (M3x8)
AK	158W28078	Screw (M3x10)
AL	158W35878	Tapping Screw (M4x8)
AM	220W21278	Flange Nut (3)
AN	251W19278	Washer (2.5) (10.5)
AP	251W21278	Washer (3) (10.5)
AQ	251W24278	Washer (4) (10.8)
AR	251W26278	Washer (5)
AS	252W24350	Nylon Washer (4)
AT	252W26450	Nylon Washer (5)
AU	252W27350	Nylon Washer (6) (10.5)
AV	252W27450	Nylon Washer (6) (11)
AW	252W29350	Nylon Washer (8) (10.5)
AX	252W31250	Nylon Washer (10) (10.25)
AY	252W31350	Nylon Washer (10) (10.5)
AZ	256W15278	Spring Washer (2) (10.5)
BA	271W10850	Dowel Pin (1.6x8)
BB	271W16250	Dowel Pin (2x12)
BC	271W28250	Dowel Pin (3x12)
BD	271W28450	Dowel Pin (3x14)
BE	271W28650	Dowel Pin (3x16)
BF	271W36650	Dowel Pin (4x16)
BG	285W16251	Pin Spring (2x12)
BH	285W28051	Spring Pin (3x10)
BJ	285W28651	Spring Pin (3x16)
BK	351W29250	C-Clip (8)
BL	354W13278	E-Clip (1.5)
BM	354W15278	E-Ring (2)
BN	354W19278	E-Ring (2.5)
BP	354W21254	Ring KL (4)
BQ	354W21278	E-Ring (3)
BR	354W24254	KL Ring (6)
BS	354W24278	E-Clip (4)
BT	354W26278	E-Clip (5)
BU	354W27254	KL-Clip (8)
BV	354W27278	E-Ring (6)
BW	354W29278	E-Ring (8)
BX	180W16878	Wing Screw
BY	113W35678	Screw (M4x6)
BZ	153W27678	Screw (M6x6)
CA	271W16050	Dowel Pin (2x10)
CB	112W27659	Sems Screw (M3x6)
CC	158W27663	Screw (M3x6)
CD	113W27551	Screw (M3x5)
CE	113W16051	Screw (M2x10)
CF	114W27878	Bind Head Screw (M3x8)
CG	113W21778	Screw (M3x18)
CH	113W20698	Round Screw (M3x6)
CJ	153W16088	Tapping Screw (M4x8)
CK	271W21050	Dowel Pin (3x10)
CL	158W27888	Round Screw (M3x9)
CM	252W29450	Nylon Washer (8) (11)
CP	–	E-Ring
CS	285W16051	Dowel Pin (2x10)
CT	285W15851	Pin Spring (2x8)
CV	113W35578	Tapping Screw (M4x5)
CW	113W27651	Screw (M3x6)
CX	251W21178	Washer (3) (10.5)
CY	354W31278	E-Clip (10)
CZ	112W27851	Screw (M3x8)
DA	113W15488	Screw (M2x4)
DB	113W20857	Screw (M3x8)
DC	237W00178	Nut Screw
DD	826E08490	Screw
DE	826E06490	Screw

6 General Procedures & Information

UI Diagnostics

UI Diagnostic (CSE) Mode 6-3
Service Copy (Tools) Mode 6-3
Diagnostic Mode 3-Key Log in 6-4
dC104 System Usage Counters 6-4
dC108 Software Versions 6-5
dC120 Fault Counter 6-5
dC122 Fault History 6-6
dC128 Fold Position Adjustment 6-6
dC129 System Registration Setup 6-7
dC131 NVM Read/Write 6-7
dC132 Serial Number Synchronize 6-8
dC135 HFSI Counters 6-9
dC137 PagePack 6-9
dC140 Analog Monitor 6-10
dC301 NVM Initialization 6-11
dC304 LPH EEPROM Self test 6-11
dC312 Network Echo Tests 6-12
dC330 Component Control 6-12
dC361 NVM Save and Restore 6-68
dC603 Image Size Adjustment 6-68
dC612 Test Pattern Print 6-69
dC640 Video Path Tests 6-70
dC671 RegiCon Measurement Cycle Control 6-71
dC673 RegiCon Control Sensor Check Cycle 6-71
dC675 RegiCon Setup Cycle Control 6-72
dC710 No Paper Run 6-72
dC740 Tray 5 (MSI) Guide Adjustment 6-73
dC909 Calibrate for Paper 6-73
dC924 TRC Adjustment 6-74
dC937 ProCon On/Off Print 6-75
dC945 IIT Calibration 6-75
dC949 ATC Default Developer Setup 6-76
dC950 ATC Sensor Setup 6-76
dC991 Tone Up/Tone Down 6-77

General Procedures

GP 1 FAX PWB Internal Selftest 6-79
GP 2 Accessing Tools 6-79
GP 3 Controller Boot Sequence 6-80
GP 5 Image Quality Calibration 6-80
GP 6 Printing Configuration Reports 6-81
GP 7 Network Printing Simulation 6-81
GP 9 Installing System Software 6-82
GP 10 HyperTerminal Setup for Controller Communication 6-86
GP 11 Resetting the System Administrator Password 6-87
GP 13 Cloning Network Configurations 6-87
GP 14 External Fax Line Test 6-89
GP 15 PWS AltBoot 6-89
GP 16 Toner CRUM Conversion 6-90
GP 18 Restoring the Public Address Book 6-91
GP 20 Reporting Billing Meter Resets 6-92
GP 22 Foreign Device Interface Setup 6-92
GP 23 Intermittent or Noise Problem RAP 6-93
GP 24 How to turn off the Power Saver Functions 6-94

General Information

Space Requirements 6-95
Product Specs. 6-96
Common Tools 6-98
Product Tools and Test Patterns 6-99
Cleaning Materials 6-99
CRUs and Consumables 6-100
Glossary of Terms 6-100

Change Tags

Change Tags 6-103

Processor (IOT) Tags

UI Diagnostic (CSE) Mode

Procedure

1. Press and hold the **0** button for approximately 5 seconds then simultaneously press the **Start** button on the UI.
2. On the Service Diagnostics Login screen, enter **6789**, then select **Enter**.
3. The UI Diagnostic menu will open.

UI Diagnostic tabs

When the UI Diagnostic menu screen is displayed, you will see the following tab choices: **Service Info**, **Diagnostics**, **Adjustments**, **Maintenance**, and **Call Closeout**. Touch a tab to see the routines available within that group. Touch a dC routine to launch it.

- **Service Info**

  This is the default tab for UI Diagnostics. It contains the following:

  General information (serial #, product code, image count, s/w version, IP address).

  dC104, dC120, dC122, dC108, and dC135
- **Diagnostics**

  This tab contains:

  dC140,dC304 , dC312, dC330, dC612, and dC640.
- **Adjustments**

  This tab contains:

  dC129, dC131, dC301, dC361, dC603, dC671, dC673, dC675, dC740, dC909 , dC924, dC937, dC949 ,dC945, dC950, and dC991.
- **Maintenance**

  This tab contains:

  dC120, dC122, dC132, dC135, dC137, and dC710.
- **Call Closeout**

  The selections within this tab allow you to choose whether the machine is rebooted when you exit UI diagnostic mode, and whether the fault counters are cleared. Touch the **Reset Counters?** square to clear fault history

Service Copy (Tools) Mode

The CSE Service Copy (Tools) mode provides access to the machine that is greater than that of a user but less than that of the System Administrator. This mode allows you to perform a number of checks and run copies without compromising the customer's security settings. This mode can be used if the Administrator user name and passcode are not at the default, and the Administrator is not available to enter the admin passcode. (GP 2)

Entering CSE Service Copy mode

1. Press and hold the **0** button for approximately 5 seconds then simultaneously press the **Start** button on the UI.
2. On the Service Diagnostics Login screen, enter **2732**, then select **Enter**.
3. The CSE Service Copy mode menu will open.
4. The Tools available in this mode are a subset of those available in Administrator mode.

   NOTE: *CSE Service Copy mode remains active until the* ***Log in/out*** *button is pressed again. When finished with Tools, always log out of Administrator mode by pressing the* ***Log in/out*** *button and confirming logout.*

Diagnostic Mode 3-Key Log in

Two new utilities are available to use without entering the Diagnostic Mode. Each of these utilities is accessed by pressing a 3-key sequence of hard keys on the control panel.

UI Panel diagnostics

This utility is used to test the operation of the UI. The utility consists of six (6) tests which are detailed in ADJ 4.1.

Admin PIN Reset

This utility is used to reset a lost or forgotten Administrator login (pin/password) (GP 11).

dC104 System Usage Counters

Purpose

Displays a history of system usage.

Procedure

1. Enter the UI Diagnostic (CSE) Mode.
2. Select the **Service Info** tab.
3. Select **dC104 System Usage**. The System Usage screen will be displayed.
4. Touch the **Impression Counters** button to filter the results:
   - **Impressions** - lists all impressions, categorized by B/W, Color, Large, Small. Print, Copy
   - **Sheet Counters** - Color, B/W, Large, Small
   - **Images Sent Counters** - Fax and Scan
   - **Fax Impressions Counters** - If Fax is enabled, lists the number of received Faxes that were printed
   - **All Usage Counters**

Press the **Update** button for the most current count.

dC108 Software Versions

Purpose

Displays the currently installed software versions for the various modules in the system.

Procedure

1. Enter the UI Diagnostic (CSE) Mode.
2. Select the **Service Info** tab.
3. Select **dC108 SW Version**. The versions of the following software modules will be displayed:
   - Software Upgrade
   - Copy Controller
   - Copy Controller OS
   - DUI H8
   - Imaging Output Terminal
   - Finisher
   - Network Controller
   - Document Feeder
   - User Interface
   - Image Input Terminal
   - XUI

dC120 Fault Counter

Purpose

Displays the number of occurrences of each IOT fault since the last Service Exit with the **Clear Counters** option selected.

NOTE:

1. faults detected while in Service Mode are not counted.

2. An Interlock open while the machine is stopped is not counted.

Procedure

1. Enter the UI Diagnostic (CSE) Mode.
2. Select the **Service Info** tab.
3. Select **dC120 Fault Counters**.
4. Selecting **Include Zero Occurrences** list all faults in the database; deselecting list only those faults with a recorded occurrence.
5. The screen displays all fault codes in the machine database by **Chain-Link**, **Description**, and **Occurrences** of the fault that have occurred since the last time the **Clear Counters** option was selected when exiting Diagnostic Mode.
6. Select the **Sort On Occurrences** button to list the most frequent faults first.
7. To jump to the start of the listing for a particular chain, press the **Chain** button, enter the chain number and press **Find**.

dC122 Fault History

Purpose

To display the Last 40 faults.

NOTE:

1. faults detected while in Service Mode are not counted.

2. An Interlock open while the machine is stopped is not counted.

3. If multiple faults occurred in the machine, the primary fault is recorded.

Procedure

1. Enter the UI Diagnostic (CSE) Mode.
2. Select the **Service Info** tab.
3. Select **dC122 Fault History**.
4. A three column table appears, listing the **Chain Link**, **Description**, and **Date and Time** of the last 40 machine faults.
5. To clear the shutdown history, select **Clear Counters** in the Call Closeout screen.

dC128 Fold Position Adjustment

Purpose

This procedure allows access to the NVM locations affecting the Finisher folding and staple position setup. There are several different adjustments, depending on the Finisher:

- ADJ 12.3 - Professional Finisher Booklet Fold Position
- ADJ 12.4 - Professional Finisher Booklet Staple Position (Staple on Fold)
- ADJ 12.5 - Professional Finisher Booklet Staple Alignment
- ADJ 12.7 - Professional Finisher Booklet Fold Position (Fine Adjustment)
- ADJ 12.8 - professional Finisher Booklet Staple Position (Staple on Fold Fine Adjustment)
- ADJ 12.10 - Finisher LX Booklet Crease/Staple Position111

dC129 System Registration Setup

Purpose

This procedure is used to align the Lead Edge and Side Edge of the developed image with media fed from the various paper trays. Refer to ADJ 9.1 for instructions

dC131 NVM Read/Write

NOTE: *NVM tables are available at: dC131 NVM Read/Write Tables*

NOTE: *For location of Professional Finisher NVM list see Figure 1*

Procedure

1. Enter the UI Diagnostic (CSE) Mode.
2. Select the **Adjustments** tab.
3. Select **dc131 NVM Read/Write**.
4. Enter the NVM Chain/Link in the **NVM ID** window.
5. Select **Read**.

   NOTE: *When an NVM is displayed in the table it will remain displayed until Clear is selected. The Clear button only clears the table display, not an NVM value.*

6. In **Value** window enter new NVM Value. Use the ***+/-*** key to enter negative numbers.
7. Select **Write** to load the new value.

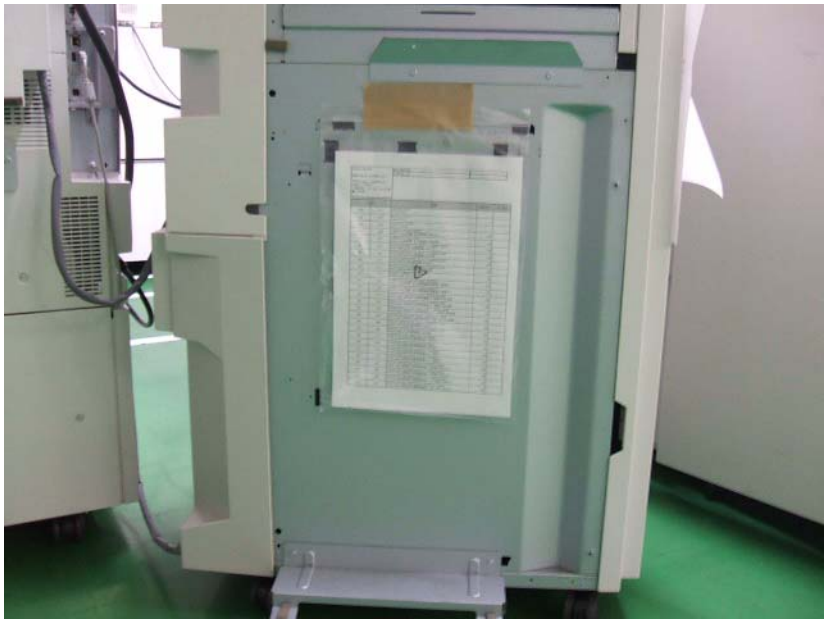

Figure 1 NVM List Location

dC132 Serial Number Synchronize

Purpose

Serial number data is stored at three locations:

- MCU NVM PWB
- SBC NVM PWB
- IIT/IPS PWB.

This procedure is used to restore serial number data integrity if these PWBs were replaced incorrectly, or if multiple failures occurred.

It is not necessary to run this procedure if a single PWB is replaced; if these boards are replaced one-at-a-time, the machine will automatically synchronize the data on the new PWB to match the other two. It is only required to perform the procedure if the removal/replacement procedure is not followed correctly.

Initial Action

Check dC122 for Communications faults (Chain 303). These can prevent serial number synchronization and must be addressed before proceeding

Procedure

Part 1 - Notify service support.

NOTE: *It may take up to 24 hours to receive a password from ACAST*

1. Enter the UI Diagnostic (CSE) Mode.
2. Select the **Maintenance Routines** tab.
3. Select **dC132 Machine Serial Number**.

CAUTION

Do not neglect the following step, and after the Unique Machine Identifier is generated, ***DO NOT*** *touch the* ***Generate Id*** *button again, as this will invalidate the Password that will be provided.*

4. Select **Generate New Identifier Code**. Record the Unique Machine Identifier

NOTE: *Follow all instructions included in the form. You must complete the form, print it, obtain required signatures and data, then scan it.*

5. Download the Serial Number Reinitialization Request Form from the SGS Library
6. Read instructions and warning in the form very carefully.
7. Note that there is a cost for this service.
8. Fill all the information. Print the completed form. Have your budget center manager sign the form. If **any** information is missing, we cannot perform the service.
9. Have National Technical Specialist (NTS, RSE or FE) forward a copy of service log and proof of the location of the machine to **acst01@xerox.com**. This information must indicate machine location, customer name and address.

   The proof may be screen capture of NTS customer support database (account management database), FWSS, ICSS, DFM BT, VQMS, VALE, STPR, etc. The information on the proof must match with the information on the form.
10. Scan the completed form and email to **acast01@xerox.com**.

Part 2 - Reserialize machine

1. Enter the UI Diagnostic (CSE) Mode.
2. Select the **Maintenance Routines** tab.

CAUTION

DO NOT *touch the* ***Generate Id*** *button, as this will invalidate the Password that will be provided.*

3. Enter the Password received from ACAST in the space for **Submit Password**.
4. Select **Submit Password**.
5. Exit Diagnostic mode
6. Switch the machine power off, then on.

Serial numbers are now synchronized.

dC135 HFSI Counters

Purpose

This routine displays the percentage of service life remaining for the periodic replacement parts.

Procedure

1. Enter the UI Diagnostic (CSE) Mode.
2. Select the **Service Info** or **Maintenance** tab.
3. Select **dC135 CRU/HFSI Counters**.
4. The CRU/HFSI screen lists the serviceable items and displays Estimated Pages Remaining.
5. Refer to Detailed Maintenance Activities (HFSI) in Section 1. Perform the listed Service Action for all HSFI counters that are at or near end of life.
6. To reset the count after replacing the parts, select the appropriate HFSI item, then select the **Reset HFSI** button.

dC137 PagePack

Purpose

The European “PagePack” program allows customers to purchase a device and then pay a fixed amount each month for supplies and service. Pricing varies with volume, and there are minimum volume commitments. The devices are sold as PagePack machines; there is no way of converting to/from PagePack in the field.

The European “eClick” program is targeted at large accounts with many devices, often spread across several sites. The devices are managed centrally, and the customers pay on a per-page basis. eClick machines can use metered or sold supplies.

With the European “Toner Out” program, customers purchase the devices and then buy “sold” supplies as and when needed.

The North American “PagePack” program has several key differences from the original European program. Firstly, the device(s) are managed and monitored by the PagePack Assistant (PPA) software, which is also responsible for sending usage data back to Xerox. Secondly, a device can be converted to a PagePack machine in the field. This is not possible in Europe, where the PagePack devices are configured either at manufacture or installation. (PPA is a client application that runs on the customer’s PC).

The “PagePack PIN” is a 4 digit code that is typically entered at the Local UI in order to enable a PagePack device. The PIN is an absolute requirement in Europe, since it ensures timely registration of the PagePack contracts with Xerox. When a European PagePack machine is powered up for the first time, it can only be used for a limited number of prints until the PIN must be entered. After the “grace” period the machine will not operate until a valid authorization PIN is entered.

When a European PagePack contract is registered, Xerox provides the PIN to the customer, who then types it in at the device UI. The device compares its internally generated PIN to the one entered by the customer, and then enables the device and the metered supplies (or not). Entering the PIN at the Local UI is not a requirement for eClick or NA PagePack devices, but the PIN mechanism may still be needed to enable the device to work with metered supplies.

NOTE: *There are other contract types available, and to make the user interface more flexible it is recommended that any contract PIN’s be referred to as an ‘Activation Code’.*

Procedure

1. Enter the UI Diagnostic (CSE) Mode.
2. Select the **Maintenance** tab.
3. Select **dc137 PagePack.**
4. Select **Enable**.
5. **Enter** the 4 digit PagePack Passcode. Select, **Save**.

dC140 Analog Monitor

Purpose

This routine allows you to monitor the status of certain analog machine sensors (Fuser temperature sensors and paper tray size sensors). Temporary change of output values is possible.

Procedure

1. Enter the UI Diagnostic (CSE) Mode.
2. Select the **Diagnostics** tab.
3. Select **dC140 Analog Monitor**.
   The system displays the **Analog Monitor** screen.
   a. The system displays the **Component** names with the **ID**, **Status**, **Range** and **Value**.
   b. The status of all output components show **Inactive**. The **Value** columns are blank.
4. To run an output component check:
   a. Select a component to check.
   b. Select **Start** on the menu screen displayed.
   c. The output component in the machine is switched on.
   d. The output component status changes to **Active**.
   e. The bit count is displayed in the **Value** column.
   f. You can switch on an input component to monitor the output component in the machine.

   NOTE: *If the component has a runtime restriction, the component is switched on for that period and automatically switched off.*

   NOTE: *Some components cannot be energized at the same time as another component. If you activate such a combination of components, the first component switched on will be automatically switched off.*

   NOTE: *If the component cannot be automatically turned off, the following message appears:* ***Cannot check the component. Stop another output component****.*

Checking multiple components

1. To check multiple components simultaneously, repeat Step 4a through 4f.
2. To stop the check, select **Stop** while the component is selected, or select **Stop All,** which switches off all output components.

Table 1 DC140 Analog Monitor Codes List

Chain-Link	Component Name	Functional Description	Time Out
010-200	Heat Belt STS Center	Heat Belt Center STS temperature AD value	-
010-201	Heat Belt STS Rear	Heat Belt Rear STS temperature AD value	-
042-200	NOHAD Environment Temp Sensor	NOHAD Environment Temp Sensor input value	-

Table 1 DC140 Analog Monitor Codes List

Chain-Link	Component Name	Functional Description	Time Out
071-200	Tray1 Size Sensor	Displays AD value for Tray1 Paper Size.	
072-200	Tray2 Size Sensor	Displays AD value for Tray2 Paper Size.	
073-200	Tray3 Size Sensor	Displays AD value for Tray3 Paper Size.	
074-200	Tray4 Size Sensor	Displays AD value for Tray4 Paper Size.	
075-200	MSI Size Sensor	Displays AD value for MSI Paper Size.	-
077-200	OHP Sensor	Displays OHP Sensor output value (AD value).	-
091-200	BCR DC I MONI Y	Y-color BCR DC Current Monitor	-
091-201	BCR DC I MONI M	M-color BCR DC Current Monitor	-
091-202	BCR DC I MONI C	C-color BCR DC Current Monitor	-
091-203	BCR DC I MONI K	K-color BCR DC Current Monitor	-
092-200	ADC_SNR	ADC Sensor input value	-
092-201	EMV_TEMP_SNR	Temp Sensor input value	-
092-202	EMV_HUM_SNR	Humidity Sensor input value	-
092-203	ATC_SNR_Y	Detection of TC in Y-color Developer Housing	-
092-204	ATC_SNR_M	Detection of TC in M-color Developer Housing	-
092-205	ATC_SNR_C	Detection of TC in C-color Developer Housing	-
092-206	ATC_SNR_K	Detection of TC in K-color Developer Housing	-

dC301 NVM Initialization

Purpose

This procedure may be needed when the machine cannot recover for some unknown reasons, including problems such as producing blank copies/prints, continuously declaring system faults, etc. It is also required as part of the software upgrade process.

Initial Actions

- Disconnect any Foreign Interface devices.
- Obtain all of the following information:
  - Saved Machine Settings, if possible.
  - NVM value factory setting report (typically it is located in the Tray 1 pocket)
  - Any customer setting Auditron account from the system administrator
  - Any setting changes (specifically NVM settings) shown on the machine's service log.
  - Any customer settings in the Tools mode.
- If possible, save Critical NVM (dC361).

Procedure

1. Enter the UI Diagnostic (CSE) Mode.
2. Select the **Adjustments** tab.
3. Select the **dC301 NVM Initialization** tab.
4. Select the **Domain, Sub Domain,** and **NVM Data** location using the radio buttons on the UI screen.
5. Select **Initialize** to run the routine. (Select **Close** to exit the routine without running it.)
6. When prompted by the software **Are you sure you want to initialize?** select **Initialize**.
7. After the initialization is complete, use the data accumulated in **Initial Actions** to restore the machine to its previous configuration.

dC304 LPH EEPROM Self test

Purpose

To check the integrity of data in the control logic of the LED Print Heads.

Procedure

1. Enter UI Diagnostic mode (UI Diagnostic (CSE) Mode).
2. Select the **Diagnostics** tab.
3. Select **dC304 LPH EEPROM Self Test**
4. Press **Start**.
5. If the data are correct and communication is possible, OK will appear.
6. If any color reports NG, check the display and fault history for any Chain 061 faults.

dC312 Network Echo Tests

Purpose

Tests the machine's capability to communicate on the network.

Procedure

1. Enter the UI Diagnostic (CSE) Mode.
2. Select the **Diagnostics** tab.
3. Select **dC312 Network Echo Test**. The Network Echo Test screen will then appear.

NOTE: *Protocols that are not enabled will not be selectable (they will be grayed out).*

4. Select the **Protocol** to be tested
5. Select the **Start Test** button. The test will run. A message will be displayed on the UI indicating if. the test was successful

dC330 Component Control

Purpose

The purpose of dC330 Component Control is to display the logic state of input signals and to energize output components.

Procedure

1. Enter the UI Diagnostic (CSE) Mode.
2. Select the **Diagnostics** tab.
3. Select **dC330 Component Control**.
4. The dC330 screen is displayed. There are two tables. the upper table is a listing of all component control codes, selectable by Chain. The lower table contains codes to be activated.

   The display indicates the following:

   - Chain/Link
   - I/O (whether component is Input (I) or Output (O))
   - Description

Finding a code

You can find a specific code by scrolling through the upper table on the UI or by selecting from the following list:

1. IOT Input Codes Table 1

   IOT Output Codes Table 2

   HCF Input Codes Table 3

   HCF Output Codes Table 4

   Integrated Office Finisher Input Codes Table 5

   Integrated Office Finisher Output Codes Table 6

   Office Finisher (LX) Input Codes Table 7

   Office Finisher (LX) Output Codes Table 8

   Professional Finisher Input Codes Table 9

   Professional Finisher Output Codes Table 10
2. The Component Control Codes in the upper table are arranged by Chain. Touch the **Chain** button and select a chain. The codes within that chain will be listed.
3. Select the desired code. A popup menu gives you the choice to either **Close Menu** or **Add** the code to the lower table.

Activating a code

CAUTION

Some components have special machine safety requirements, such as removing the IBT assembly before running the IBT Drive, etc. Read he entry for codes in tables 1 - 4 in order to avoid machine damage.

1. To add a code directly to the lower table, touch the **Chain-link** icon on the UI. Use the keypad to enter the complete 6-digit component control code, then touch the **Add** button.
2. Codes are activated by touching the entry in the lower table. Select the desired action from the popup table that occurs.

NOTE: *If the component has a runtime restriction, the component is switched on for that period and automatically switched off.*

3. Press the **Stop** or **Stop All** button, or double click the active component in the Active Stack box to end the test. The ID and Active Stack components are removed from the Active Stack box.

Stacking Component Codes

NOTE: *Some components cannot be energized at the same time as another component. If you activate such a combination of components, the first component switched on will be automatically switched off. If the component cannot be automatically turned off, the following message appears:!* ***Cannot check the component. Stop another output component***

1. To stack several codes, select the first code and press **Start**, then select the next code and press **Start**. Continue to enter up to eleven codes.
2. The state changes to Run; H or L as applicable.
3. Stop a highlighted component by pressing **Stop** or
4. To switch off all components, press **Stop All**.

Table 1 IOT Input Codes

Chain-Link	Component Name	Display	Operational Description
001-201	MCU FUSE FAIL#1	H/L	H: FUSE blowout
001-202	MCU FUSE FAIL#2	H/L	H: FUSE blowout
001-203	MCU FUSE FAIL#3	H/L	H: FUSE blowout
001-204	MDD FUSE FAIL#1	H/L	H: FUSE blowout
001-205	MDD FUSE FAIL#2	H/L	H: FUSE blowout
001-206	MDD FUSE FAIL#3	H/L	H: FUSE blowout
001-207	MDD FUSE FAIL#4	H/L	H: FUSE blowout
001-208	MDD FUSE FAIL#5	H/L	H: FUSE blowout
001-209	P401 CONNECT FAIL	H/L	L: P401 poor contact
001-210	P406 CONNECT FAIL	H/L	H: P406 poor contact
001-211	P410 CONNECT FAIL1	H/L	H: P410 poor contact
001-212	P410 CONNECT FAIL2	H/L	H: P410 poor contact
001-213	P411 CONNECT FAIL	H/L	H: P411 poor contact
001-300	INTLK_1	H/L	High with INTLK_1 open.
001-301	INTLK_2	H/L	High with INTLK_2 open.
001-302	LH LOW I/L SW	H/L	High with the SW open.
001-304	LH 3TM I/L SW	H/L	High with the SW open.
001-306	INTLK_3	H/L	High with INTLK_3 open.
004-100	Belt Home Sensor	H/L	H: IBT is not at Home Position. ***NOTE:*** *IBT 5V ON requires operating.*
004-101	Drum Motor YMC Fail Detection	H/L	H: PR (Drum) Motor YMC Fail
004-102	Drum Motor K Fail Detection	H/L	H: PR (Drum) Motor K Fail

Table 1 IOT Input Codes

Chain-Link	Component Name	Display	Operational Description
004-200	FUSER FAN FAIL	H/L	H: FAN stops rotating.
004-201	BOTTOM FAN FAIL	H/L	H: FAN stops rotating.
004-202	Dev FAN FAIL	H/L	H: FAN stops rotating.
004-203	LV FAN FAIL	H/L	H: FAN stops rotating.
004-204	REAR FAN FAIL	H/L	H: FAN stops rotating.
005-102	Document Sensor (Belt DADF/CVT)	H/L	H: No paper on Document Sensor
005-110	Regi Sensor (Belt DADF/CVT)	H/L	L: Paper on Regi Sensor
005-205	CVT-DADF Feed Out Sensor	H/L	H: Paper on Feed Out Sensor
005-206	CVT-DADF Pre-Reg.Sensor	H/L	H: Paper on Pre-Reg. Sensor
005-211	CVT-DADF Inverter Sensor	H/L	H: Paper on Inverter Sensor
005-212	CVT-DADF Feeder Cover Interlock Switch	H/L	H: Feeder Cover Open
005-213	CVT DADF Interlock Switch (PF1&2&1.5&2.01)	H/L	H: Platen Interlock Open
005-215	CVT-DADF #1 Tray APS Sensor	H/L	L: Light blocked by Actuator (PF2)
005-216	CVT-DADF #2 Tray APS Sensor	H/L	L: Light blocked by Actuator (PF2)
005-217	CVT-DADF #3 Tray APS Sensor	H/L	L: Light blocked by Actuator (PF2)
005-218	CVT-DADF #1 APS Sensor	H/L	L: No paper on APS No.1 Sensor (PF2)
005-219	CVT-DADF #2 APS Sensor	H/L	L: No paper on APS No.1 Sensor (PF2)
005-220	CVT-DADF #3 APS Sensor	H/L	L: No paper on APS No.1 Sensor (PF2)
005-221	CVT-DADF Tray Size SNR No.1	H/L	L: No paper on Tray Size SNR No. 1
005-222	CVT-DADF Tray Size SNR No.2	H/L	L: No paper on Tray Size SNR No. 2
005-224	Scan Start	H	Scan Signal ON
005-225	Nudger Position Sir	H/L	H: Nudger Roll is at home position.
005-226	#2Invert Sensor(PF1) Stamp Set(PF2.01)	H/L	H: Paper on #2 Invert Sensor
005-227	A3 Exist(PF2.01)	H/L	L: A3 machine
005-228	APS Sensor Exist(PF2.01)	H/L	L: APS Sensor exists.
005-229	FAN FAIL Check (PF2.01)	H/L	L: when driving (in normal state)
005-233	Cooling Fan Exist(PF2.01)	H/L	L: FAN exists 24V
006-160	Polygon Motor Ready Signal	H/L	L: Steady rotation of Polygon Motor
007-100	#1Tray Size SW1	H/L	ON: AN value
007-101	#1Tray Size SW2	H/L	ON: AN value

Table 1 IOT Input Codes

Chain-Link	Component Name	Display	Operational Description
007-102	#1Tray Size SW3	H/L	ON: AN value
007-103	#1Tray Size SW4	H/L	ON: AN value
007-104	#2Tray Size SW1	H/L	ON: AN value
007-105	#2Tray Size SW2	H/L	ON: AN value
007-106	#2Tray Size SW3	H/L	ON: AN value
007-107	#2Tray Size SW4	H/L	ON: AN value
007-108	#3Tray Size SW1	H/L	ON: AN value
007-109	#3Tray Size SW2	H/L	ON: AN value
007-110	#3Tray Size SW3	H/L	ON: AN value
007-111	#3Tray Size SW4	H/L	ON: AN value
007-112	#4Tray Size SW1	H/L	ON: AN value
007-113	#4Tray Size SW2	H/L	ON: AN value
007-114	#4Tray Size SW3	H/L	ON: AN value
007-115	#4Tray Size SW4	H/L	ON: AN value
007-116	#1Level Sensor	H/L	H: Lift Up
007-117	#2Level Sensor	H/L	H: Lift Up
007-118	#3Level Sensor	H/L	H: Lift Up
007-119	#4Level Sensor	H/L	H: Lift Up
007-120	#1Nopaper Sensor	H/L	H: No paper
007-121	#2Nopaper Sensor	H/L	H: No paper
007-122	#3Nopaper Sensor	H/L	H: No paper
007-123	#4Nopaper Sensor	H/L	H: No paper
007-125	SMH No paper Sensor	H/L	H: No paper
007-128	Face Up Tray Detect	H/L	Low with Tray installed
008-100	#1Feed Out Sensor	H/L	H: Paper exists.
008-102	#3Feed Out Sensor	H/L	H: Paper exists.
008-103	#4Feed Out Sensor	H/L	H: Paper exists.
008-104	Regi Sensor	H/L	H: No paper
008-105	Dup Wait Sensor	H/L	H: Paper exists.
008-106	T/A Sensor	H/L	H: Paper exists.
008-107	TTM Path Sensor1	H/L	H: Paper exists.
008-108	TTM Path Sensor2	H/L	H: Paper exists.
008-109	OHP Sensor#L	H/L	ON: Low
008-110	OHP Sensor#R	H/L	ON: Low
008-300	DUP Open Switch	H/L	ON: High
009-101	Toner_Y New	H/L	Y-toner CRU Contact open (Y-toner CRU is installed or not installed.) ON: Low=new, High=old

Table 1 IOT Input Codes

Chain-Link	Component Name	Display	Operational Description
009-102	Toner_M New	H/L	M-toner CRU Contact open (M-toner CRU is installed or not installed.) ON: Low=new, High=old
009-103	Toner_C New	H/L	C-toner CRU Contact open (C-toner CRU is installed or not installed.) ON: Low=new, High=old
009-104	Toner_K New	H/L	K-toner CRU Contact open (K-toner CRU is installed or not installed.) ON: Low=new, High=old
009-150	TNR FULL SNR	H/L	ON: High
009-151	#Y_CRU detect	H/L	H: CRU installed
009-152	#M_CRU detect	H/L	H: CRU installed
009-153	#C_CRU detect	H/L	H: CRU installed
009-154	#K_CRU detect	H/L	H: CRU installed
009-200	2nd BTR Retract Sensor	H/L	L: Retracted
009-201	POB Sensor	H/L	L: Paper exists.
009-203	1st BTR Retract Sensor	H/L	L: Retracted
010-101	Fuser Exit	H/L	H: Paper exists.
010-104	Fuser Motor (60.5mm Speed)	H/L	Fuser Motor rotation operation. It rotates at 60.5mm/s. [Ref Clk] 604.741Hz
010-201	Fuser Thermostat Status	H/L	Display of the current level of Thermostat H:Thermostat disconnected L: Thermostat connected
010-202	P/Roll Latch Sensor	H/L	Display of the current level of Latch Sensor H: P/Roll Latch ON position L: P/Roll Latch OFF position
010-203	Belt Speed Sensor	0/1	Display of the level of Belt Speed Sensor 0: Belt Speed Sensor Input exists. 1:Belt Speed Sensor Input does not exist.
012-100	IOT Regi Clutch	H/L	H: Clutch OFF
012-101	Compiler Tray Exit Sensor	H/L	H: Paper exists.
012-102	Compiler Paper Sensor	H/L	H: Paper exists.
012-103	H-Tra Ent. Sensor	H/L	H: Paper exists.
012-104	H-Tra Exit Sensor	H/L	H: Paper exists.
012-200	Stacker Paper Sensor	H/L	H: Paper exists.

Table 1 IOT Input Codes

Chain-Link	Component Name	Display	Operational Description
012-201	Stacker Height Sensor	H/L	H: Higher than the detection level
012-202	Stacker Upper Limit Sensor	H/L	H: Upper Limit Position (The limit of the rise of Stacker Tray is detected.)
012-204	Stacker Stack A Sensor	H/L	H: Load on Stacker Tray is detected.
012-205	Stacker Stack B Sensor	H/L	H: Load on Stacker Tray is detected.
012-207	Staple Head Home Sensor	H/L	H: Staple Head at Home Position is detected.
012-208	Low Staple Switch	H/L	H: Low Staple (40 or less staples are left.)
012-209	Staple Ready Sensor	H/L	H: Staple at the head of Staple Head is detected.
012-210	Eject Clamp Home Sensor	H/L	H: Not at Home Position (Roller DOWN)
012-215	H-Tra IOT Full Paper Sensor	H/L	H: No paper
012-216	Front Tamper Home Sensor	H/L	H: Home Position detected
012-217	Decurler Cam Position Sensor	H/L	H: Not at Home Position (Sensor receives light.)
012-224	Stapler Move Sensor	H/L	H: Staple Unit Position detected
012-225	Stapler Front Corner Sensor	H/L	H: Front Corner Position
012-301	Top Cover Interlock Switch	H/L	H: Open
012-305	H-Tra Interlock Sensor	H/L	H: Open
013-112	BOOKLET TRAY BELT SW	H/L	Detection as to whether Booklet Tray Belt Switch is pressed down
013-145	(Fin-C)5 Bin Full Paper Sensor	H/L	Detection of MBX Bin 5 Full H: Full L: Not Full
013-146	(Fin-C)6 Bin Full Paper Sensor	H/L	Detection of MBX Bin 6 Full H: Full L: Not Full
013-147	(Fin-C)7 Bin Full Paper Sensor	H/L	Detection of MBX Bin 7 Full H: Full L: Not Full
013-148	(Fin-C)8 Bin Full Paper Sensor	H/L	Detection of MBX Bin 8 Full H: Full L: Not Full
013-149	(Fin-C)9 Bin Full Paper Sensor	H/L	Detection of MBX Bin 9 Full H: Full L: Not Full
013-150	(Fin-C)10 Bin Full Paper Sensor	H/L	Detection of MBX Bin 10 Full H: Full L: Not Full

Table 1 IOT Input Codes

Chain-Link	Component Name	Display	Operational Description
013-151	(Fin-C)MBX Vertical Sensor	H/L	MBX Vertical Sensor Detection as to whether paper exists H: Paper exists. L: No paper
013-153	(Fin-C)MBX Front Cover Sensor	H/L	Detection of MBX Front Cover OPEN H: OPEN L: CLOSED
014-100	Xport Ent. SNR	H/L	H: Paper exists. L: No paper
014-101	Buffer Path SNR	H/L	H: Paper exists. L: No paper
014-102	Gate Snr	H/L	H: No paper L: Paper exists.
014-110	Regi Clutch ON	H/L	H: Clutch OFF L: Clutch ON
014-111	IOT Exit SNR	H/L	H: Paper exists. L: No paper
014-115	Top Tray Exit SNR	H/L	H: Paper exists. L: No paper
014-150	Compile Exit SNR	H/L	H: Paper exists. L: No paper
014-151	Compile Tray No Paper SNR	H/L	H Paper exists. L: No paper
014-190	H-Xport Ent. SNR	H/L	H: Paper exists. L: No paper
014-191	H-Xport Exit SNR	H/L	H: Paper exists. L: No paper
014-200	Side Regi SNR 1	H/L	H: Paper exists. L: No paper
014-201	Side Regi SNR 2	H/L	H: Paper exists. L: No paper
014-215	Top Tray Full SNR	H/L	H: Full L: Not Full
014-220	Front Tamper Home SNR	H/L	H: Home L: Not Home
014-221	Rear Tamper Home SNR	H/L	H: Home L: Not Home
014-241	Stapler Move Position SNR	H/L	H: SNR Position L: Not SNR Position
014-242	Low Staple SNR	H/L	H: No staple L: Staples available
014-243	Self Priming SNR	H/L	H: Not Ready L: Ready

Table 1 IOT Input Codes

Chain-Link	Component Name	Display	Operational Description
014-244	Staple Home SNR	H/L	H: Not Home L: Home
014-250	Eject Clamp Home SNR	H/L	H: Not Home L: Home
014-251	Set Clamp Home SNR	H/L	H: Not Home L: Home
014-260	Upper Limit SNR	H/L	H: Limit L: Not Limit
014-262	Stacker No Paper SNR	H/L	H: No paper L: Paper exists.
014-263	Stack Encoder SNR	H/L	H: Detected L: Not detected
014-264	Stack Hight SNR 1	H/L	H: Detected by SNR L: Not detected by SNR
014-265	Stack Hight SNR 2	H/L	H: Detected by SNR L: Not detected by SNR
014-270	Puncher Move Home SNR	H/L	H: Not Home L: Home
014-271	Puncher Home SNR	H/L	H: Home L: Not Home
014-272	Puncher Front SNR	H/L	H: Home L: Not Home
014-273	Punch Hole Select SNR	H/L	H: Home L: Not Home
014-274	Puncher Motor SNR	H/L	H: Light blocked L: Light received
014-275	Punch Box Set SNR	H/L	H:Box Set L:Box not set
014-281	H-Xport Top Tray Exit SNR	H/L	H: Paper L: No paper
014-282	Decurler Home SNR	H/L	H: Not Home L: Home
014-300	Eject Cover SW	H/L	H: OPEN L: CLOSED
014-302	Finisher Front Door SW	H/L	H: OPEN L: CLOSED
014-303	H-Xport Interlock SNR	H/L	H: OPEN L: CLOSED
042-201	IBT Belt Home Sensor		Detects IBT Belt Home Sensor On/ Off.
042-202	Fuser Fan Fail	H: Not rotating L: Rotat-ing	Detects whether Fuser Fan is rotat-ing. 1 = not rotating.

Table 1 IOT Input Codes

Chain-Link	Component Name	Display	Operational Description
042-203	Drive Fan Fail	H: Not rotating L: Rotat-ing	Detects whether Drive Fan is rotating. 1 = not rotating.
042-204	Rear Bottom Fan Fail	H: Not rotating L: Rotat-ing	Detects whether Rear Bottom Fan is rotating. 1 = not rotating.
042-205	IBT Fan Fail	H: Not rotating L: Rotat-ing	Detects whether IBT Fan is rotating. 1 = not rotating.
042-206	MHVPS Fan Fail	H: Not rotating L: Rotat-ing	Detects whether MHVPS Fan is rotat-ing. 1 = not rotating.
042-207	Process2 Fan Fail	H: Not rotating L: Rotat-ing	Detects whether Process2 Fan is rotating. 1 = not rotating.
042-208	LVPS Exhaust Fan Fail	H: Not rotating L: Rotat-ing	Detects whether LVPS Exhaust Fan is rotating. 1 = not rotating.
042-209	Cartridge Fan Fail	H: Not rotating L: Rotat-ing	Detects whether Cartridge Fan is rotating. 1 = not rotating.
042-210	Process1 Fan Fail	H: Not rotating L: Rotat-ing	Detects whether Process1 Fan is rotating. 1 = not rotating.
042-211	Suction Fan Fail	H: Not rotating L: Rotat-ing	Detects whether Suction Fan is rotat-ing. 1 = not rotating.
042-213	C Exhaust Fan Fail	H: Not rotating L: Rotat-ing	Detects whether C Exhaust Fan is rotating. 1 = not rotating.
042-214	IH Intake Fan Fail	H: Not rotating L: Rotat-ing	Detects whether IH Intake Fan is rotating. 1 = not rotating.

Table 1 IOT Input Codes

Chain-Link	Component Name	Display	Operational Description
042-215	IH Exhaust Fan Fail	H: Not rotating L: Rotat-ing	Detects whether IH Exhaust Fan is rotating. 1 = not rotating.
042-216	LH Fan Fail	H: Not rotating L: Rotat-ing	Detects whether LH Fan is rotating. 1 = not rotating.
062-201	Sheet Abort	H/L	Document Regist L: ON
062-212	IIT Regi Sensor	H/L	Regi Sensor de-actuated L: ON
062-240	ADF Exist	H/L	DADF not installed H: ON
062-251	APS Sensor1	H/L	Document exists. L: APS SNR1 H: APS ON
062-253	APS Sensor3	H/L	Document exists. L: APS SNR3 H: APS ON
062-272	ScanStart	H/L	L: Ready to scan
062-300	Platen I/L Switch	H/L	Platen closed L: ON
062-301	Angle Sensor	H/L	Platen closed L: ON
071-101	#1 No Paper Sensor	H/H	Detects #1 No Paper Sensor On/Off.
071-102	#1 Level Sensor	H/H	Detects #1 Level Sensor On/Off.
071-104	#1 TRAY Paper Size Switch	-	Detects #1 TRAY Paper Size Sensor SW5 On/Off.
071-105	#1 Pre Feed Sensor		Detects #1 Pre Feed Sensor On/Off.
072-101	#2 No Paper Sensor	H/H	Detects #2 No Paper Sensor On/Off.
072-102	#2 Level Sensor	H/H	Detects #2 Level Sensor On/Off.
072-103	#2 Feed Out Sensor	-	Detects #2 Feed Out Sensor On/Off.
072-104	#2 TRAY Paper Size Switch	-	Detects #2 TRAY Paper Size Sensor SW5 On/Off.
073-101	#3 No Paper Sensor	H/H	Detects #3 No Paper Sensor On/Off.
073-102	#3 Level Sensor	H/H	Detects #3 Level Sensor On/Off.
073-103	#3 Feed Out Sensor	-	Detects #3 Feed Out Sensor On/Off.
073-104	#3 TRAY Paper Size Switch	-	Detects #3 TRAY Paper Size Sensor SW5 On/Off.
073-105	#3 Pre Feed Sensor (TTM only)		Detects #3 Pre Feed Sensor On/Off.
074-101	#4 No Paper Sensor	H/H	Detects #4 No Paper Sensor On/Off.

Table 1 IOT Input Codes

Chain-Link	Component Name	Display	Operational Description
074-102	#4 Level Sensor	H/H	Detects #4 Level Sensor On/Off.
074-103	#4 Feed Out Sensor	-	Detects #4 Feed Out Sensor On/Off.
074-104	#4 TRAY Paper Size Switch	-	Detects #4 TRAY Paper Size Sensor SW5 On/Off.
074-105	#4 Pre Feed Sensor (TTM only)		Detects #4 Pre Feed Sensor On/Off.
075-101	MSI No Paper Sensor	-	Detects MSI No Paper Sensor On/Off.
075-102	MSI Nudger Position Sensor	-	Detects MSI Nudger Position Sensor On/Off.
075-103	MSI Feed Out Sensor	-	Detects MSI Feed Out Sensor On/Off.
077-100	#2 Exit Sensor	L	Detects #2 Exit Sensor On/Off.
077-101	#1 Exit Sensor	L	Detects #1 Exit Sensor On/Off.
077-102	POB Sensor	L	Detects POB Sensor On/Off.
077-103	Regi Sensor	L	Detects Regi Sensor On/Off.
077-104	MSI Feed Out Sensor	L	Detects MSI Feed Out Sensor On/Off.
077-105	#2 Feed Out Sensor	L	Detects #2 Feed Out Sensor On/Off.
077-106	#3 Feed Out Sensor	L	Detects #3 Feed Out Sensor On/Off.
077-107	#4 Feed Out Sensor	L	Detects #4 Feed Out Sensor On/Off.
077-108	Dup Path Sensor	L	Detects Dup Path Sensor On/Off.
077-109	#1 OCT Home Position Sensor	L	Detects #1 OCT Home Position Sen-sor On/Off.
077-110	#2 OCT Home Position Sensor	L	Detects #2 OCT Home Position Sen-sor On/Off.
077-120	IOT Feed Ready Signal Input	-	Detects Feed Ready Signal OFF/ON.
077-121	TM Regi Stop Signal Input	-	Detects Regi Stop Signal OFF/ON.
077-123	TM Feed ON Signal Input	-	Detects Feed ON Signal OFF/ON.
077-124	Full Stack Sensor 1		Detects Full Stack Sensor 1 ON/OFF.
077-125	Full Stack Sensor 2		Detects Full Stack Sensor 2 ON/OFF.
077-201	Face Up Tray Detect Switch	-	Detects Face Up Tray Detect Switch On/Off.
077-300	Left Hand Interlock Switch	-	Detects Left Hand Interlock Switch On/Off.
077-301	Left Hand Low Cover Switch	-	Detects Left Hand Low Cover Switch On/Off.
077-302	Left Hand High Cover Switch	-	Detects Left Hand High Cover Switch On/Off.
077-303	Front Interlock Switch	-	Detects Front Interlock Switch On/Off.
077-305	Dup Cover Switch	-	Detects Dup Cover Switch On/Off.
077-306	TM Left Hand Interlock Switch	-	Detects TM Left Hand Interlock Switch On/Off.
077-307	IBT Cover Switch	-	Detects IBT Cover Switch On/Off.

Table 1 IOT Input Codes

Chain-Link	Component Name	Display	Operational Description
091-200	Bottle Position SNR	H/L	Displays the state (High/Low) of Waste Toner Bottle Existence Detection Sensor.
091-201	Bottle Full SNR	H/L	Displays the state (High/Low) of Waste Toner Bottle Full Detection Sensor.
091-202	SNR Photo	H/L	Displays a High/Low output from Rotation Detection Sensor.
094-200	1st BTR Retract Sensor	-	1st BTR Retract Sensor Reading Displays the current level (H or L) at “On”.
094-201	2nd BTR Retract Sensor	-	2nd BTR Retract Sensor Reading Displays the current level (H or L) at “On”.
094-202	POB Jam Sensor	-	Detects the active level of POB Jam Sensor.

Table 2 IOT Output Codes

Chain-Link	Component Name	Operational Description	Time Out	Cyclic ?	Conflicts
005-001	CVT Feed Motor (Mid,Low):CW 41.3mm/sec	Current Value PF2.01(Mid) Start->50ms:1.0A 50ms->50s:1.0A 50s->50ms:0.8A Frequency PF2.01(Mid) 574.465Hz			005-002~005-010, 005-013~005-022, 005-046~005-051, 005-090, 005-093
005-002	CVT Feed Motor (Mid,Low):CW 55.0mm/sec	Current Value PF2.01(Mid) Start->50ms:1.2A 50ms->50s:1.0A 50s->50ms:0.8A Frequency PF2.01(Mid) 765.990Hz			005-001, 005-003~005-010, 005-013~005-022, 005-046~005-051, 005-090, 005-093
005-003	CVT Feed Motor (Mid):CW 73.3mm/sec	Current Value PF2.01(Mid) Start->50ms:1.2A 50ms->50s:1.0A 50s->50ms:0.8A Frequency PF2.01(Mid) 1021.320Hz			005-001~005-002, 005-004~005-010, 005-013~005-022, 005-046~005-051, 005-090, 005-093

Table 2 IOT Output Codes

Chain-Link	Component Name	Operational Description	Time Out	Cyclic ?	Conflicts
005-004	CVT Feed Motor (Mid,Low):CW 82.5mm/sec	Current Value PF2.01(Mid) Start->50ms:1.2A 50ms->50s:1.0A 50s->50ms:0.8A Frequency PF2.01(Mid) 1148.930Hz			005-001~005-003, 005-005~005-010, 005-013~005-022, 005-046~005-051, 005-090, 005-093
005-005	CVT Feed Motor (High,Mid,Low):CW 110.0mm/sec	Current Value PF2.01(Mid) Start->50ms:1.2A 50ms->50s:1.0A 50s->50ms:0.8A Frequency PF2.01(Mid) 1531.980Hz			005-001~005-004, 005-006~005-010, 005-013~005-022, 005-046~005-051, 005-090, 005-093
005-006	CVT Feed Motor 1(High):CW 137.5mm/sec				005-001~005-005, 005-007~005-022, 005-013~005-010, 005-046~005-051, 005-090, 005-093
005-007	CVT Feed Motor (High,Mid):CW 146.7mm/sec	Current Value PF2.01(Mid) Start->50ms:1.2A 50ms->50s:1.0A 50s->50ms:0.8A Frequency PF2.01(Mid) 2042.901Hz			005-001~005-006, 005-008~005-010, 005-013~005-022, 005-046~005-051, 005-090, 005-093
005-008	CVT Feed Motor (High,Mid,Low):CW 165.0mm/sec	Current Value PF2.01(Mid) Start->50ms:1.2A 50ms->50s:1.0A 50s->50ms:0.8A Frequency PF2.01(Mid) 2298.190Hz			005-001~005-007, 005-009~005-010, 005-013~005-022, 005-046~005-051, 005-090, 005-093
005-009	CVT Feed Motor (High):CW 183.3mm/sec				005-001~005-008, 005-010, 005-013~005-022, 005-046~005-051, 005-090, 005-093

Table 2 IOT Output Codes

Chain-Link	Component Name	Operational Description	Time Out	Cyclic ?	Conflicts
005-010	CVT Feed Motor (High,Mid,Low):CW 220.0mm/sec	Current Value PF2.01(Mid) Start->50ms:1.4A 50ms->50s:1.0A 50s->50ms:0.8A Frequency PF2.01(Mid) 3063.960Hz			005-001~005-009, 005-013~005-022, 005-046~005-051, 005-090, 005-093
005-014	CVT Feed Motor (High,Mid):CW 293.3mm/sec	Current Value PF2.01(Mid) Start->50ms:1.4A 50ms->50s:1.2A 50s->50ms:0.8A Frequency PF2.01(Mid) 4085.802Hz			005-001~005-010, 005-013, 005-015~005-022, 005-046~005-051, 005-090, 005-093
005-015	Feed Motor CW(330.0mm/s)(High,Mid,Low)	Current Value PF2.01(Mid) Start->50ms:1.4A 50ms->50s:1.4A 50s->50ms:0.8A Frequency PF2.01(Mid) 4597.701Hz			005-001~005-010, 005-013~005-014, 005-016~005-022, 005-046~005-051, 005-090, 005-093
005-017	Feed Motor CW(440.0mm/s)(High,Mid)	Current Value PF2.01(Mid) Start->50ms:1.4A 50ms->50s:1.4A 50s->50ms:0.8A Frequency PF2.01(Mid) 6130.268Hz			005-001~005-010, 005-013~005-016, 005-018~005-022, 005-046~005-051, 005-090, 005-093
005-019	Feed Motor CCW(400.0mm/s)(High,Mid)	Current Value PF2.01(Mid) Start->50s:1.9A 50s->50ms:0.8A Frequency PF2.01(Mid) 3714.02Hz			005-001~005-010, 005-013~005-018, 005-020~005-022, 005-046~005-051, 005-090, 005-093

Table 2 IOT Output Codes

Chain-Link	Component Name	Operational Description	Time Out	Cyclic ?	Conflicts
005-020	Feed Motor CW(300.0mm/s)(High,Mid,Low)	Current Value PF2.01(Mid) Start->50ms:1.4A 50ms->50s:1.4A 50s->50ms:0.8A Frequency PF2.01(Mid) 2785.515Hz			005-001~005-010, 005-013~005-019, 005-021~005-022, 005-046~005-051, 005-090, 005-093
005-021	Feed Motor CW(240.0mm/s)(High,Mid,Low)	Current Value PF2.01(Mid) Start->50ms:1.4A 50ms->50s:1.0A 50s->50ms:0.8A Frequency PF2.01(Mid) 2228.412Hz			005-001~005-010, 005-013~005-020, 005-022, 005-046~005-051, 005-090, 005-093
005-022	Feed Motor CW(150.0mm/s)(High,Mid,Low)	Current Value PF2.01(Mid) Start->50ms:1.4A 50ms->50s:1.0A 50s->50ms:0.8A Frequency PF2.01(Mid) 1392.7577Hz			005-001~005-010, 005-013~005-021, 005-046~005-051, 005-090, 005-093
005-026	CVT Reg.Motor (Mid,Low):CCW 41.3mm/sec	Current Value PF2.01(Mid) Start->50ms:1.0A 50ms->50s:0.7A 50s->50ms:0.7A Frequency PF2.01(Mid) 574.465Hz			005-027~005-039, 005-041~005-042
005-027	CVT Reg.Motor (Mid,Low):CCW 55.0mm/sec	Current Value PF2.01(Mid) Start->50ms:1.0A 50ms->50s:0.7A 50s->50ms:0.7A Frequency PF2.01(Mid) 765.990Hz			005-026, 005-028~005-039, 005-041~005-042

Table 2 IOT Output Codes

Chain-Link	Component Name	Operational Description	Time Out	Cyclic ?	Conflicts
005-028	CVT Reg.Motor (Mid):CCW 73.3mm/sec	Current Value PF2.01(Mid) Start->50ms:1.0A 50ms->50s:0.7A 50s->50ms:0.7A Frequency PF2.01(Mid) 1021.320Hz			005-026~005-028, 005-029~005-039, 005-041~005-042
005-029	CVT Reg.Motor (Mid,Low):CCW 82.5mm/sec	Current Value PF2.01(Mid) Start->50ms:1.1A 50ms->50s:0.8A 50s->50ms:0.7A Frequency PF2.01(Mid) 1148.930Hz			005-026~005-028, 005-030~005-039, 005-041~005-042
005-030	CVT Reg.Motor (High,Mid,Low):CCW 110.0mm/sec	Current Value PF2.01(Mid) Start->50ms:1.1A 50ms->50s:0.8A 50s->50ms:0.7A Frequency PF2.01(Mid) 1531.980Hz			005-026~005-029, 005-031~005-039, 005-041~005-042
005-032	CVT Reg.Motor (High,Mid):CCW 146.7mm/sec	Current Value PF2.01(Mid) Start->50ms:1.1A 50ms->50s:0.8A 50s->50ms:0.7A Frequency PF2.01(Mid) 2042.901Hz			005-026~005-031, 005-033~005-039, 005-041~005-042
005-033	CVT Reg.Motor (High,Mid,Low):CCW 165.0mm/sec	Current Value PF2.01(Mid) Start->50ms:1.1A 50ms->50s:0.8A 50s->50ms:0.7A Frequency PF2.01(Mid) 2298.190Hz			005-026~005-032, 005-034~005-039, 005-041~005-042

Table 2 IOT Output Codes

Chain-Link	Component Name	Operational Description	Time Out	Cyclic ?	Conflicts
005-038	Regi Motor CCW(330.0mm/s)(High,Mid,Low)	Current Value PF2.01(Mid) Start->50ms:1.3A 50ms->50s:1.1A 50s->50ms:0.7A Frequency PF2.01(Mid) 4597.701Hz			005-026~005-037, 005-039, 005-041~005-042
005-041	Regi Motor CCW(440.0mm/s)(High,Mid)	Current Value PF2.01(Mid) Start->50ms:1.3A 50ms->50s:1.1A 50s->50ms:0.7A Frequency PF2.01(Mid) 6130.268Hz			005-026~005-039, 005-042
005-050	Feed Motor CW(100.0mm/s TA)(Mid)	Current Value PF2.01(Mid) Start->50ms:1.2A 50ms->50s:1.0A 50s->50ms:0.8A Frequency PF2.01(Mid) 1392.7577Hz			005-001~005-010, 005-013~005-022, 005-046~005-049, 005-051, 005-090, 005-093
005-063	Cooling Fan Operation				
005-072	CVT Nip Release Sol				-
005-073	CVT Stamp Sol				-
005-083	Doc Ready				-
005-084	Doc Set LED				-
005-088	Image Area ON				-
005-090	Set Gate Sol.				005-001~005-010, 005-013~005-022, 005-046~005-051, 005-093
005-093	Nudger Initialize RCP Operation (PF2.01)				005-001~005-010, 005-013~005-022, 005-046~005-051, 005-009

Table 2 IOT Output Codes

Chain-Link	Component Name	Operational Description	Time Out	Cyclic ?	Conflicts
010-001	Fuser Motor(255mm Speed)	Fuser Motor rotation operation. It rotates at 255mm/s (+0.8%). [Ref Clk]1497.7235Hz	-	X	010-002, 010-003, 010-004, 010-005, 010-006, 010-007, 010-008, 094-012, 094-013
010-002	Fuser Motor(225mm Speed)	Fuser Motor rotation operation. It rotates at 225mm/s (+0.8%). [Ref Clk] 1320.5155Hz	-	X	010-001, 010-003, 010-004, 010-005, 010-006, 010-007, 010-008, 094-012, 094-013
010-003	Fuser Motor(200mm Speed)	Fuser Motor rotation operation. It rotates at 200mm/s (+0.8%). [Ref Clk] 1173.7089Hz	-	X	010-001, 010-002, 010-004, 010-005, 010-006, 010-007, 010-008, 094-012, 094-013
010-004	Fuser Motor(175mm High Speed)	Fuser Motor rotation operation. It rotates at 175mm/s (+1.2%). [Ref Clk] 1031.0129Hz	-	X	010-001, 010-002, 010-003, 010-005, 010-006, 010-007, 010-008, 094-012, 094-013
010-005	Fuser Motor(121mm High Speed)	Fuser Motor rotation operation. It rotates at 121mm/s (+1.2%). [Ref Clk] 712.9007Hz	-	X	010-001, 010-002, 010-003, 010-004, 010-006, 010-007, 010-008, 094-012, 094-013
010-006	Fuser Motor(175mm Low Speed)	Fuser Motor rotation operation. It rotates at 175mm/s (+1.3%). [Ref Clk] 1474.404Hz	-	X	010-001, 010-002, 010-003, 010-004, 010-005, 010-007, 010-008, 094-012, 094-013
010-007	Fuser Motor(121mm Low Speed)	Fuser Motor rotation operation. It rotates at 121mm/s (+1.3%). [Ref Clk] 1019.410Hz	-	X	010-001, 010-002, 010-003, 010-004, 010-005, 010-006, 010-008, 094-012, 094-013

Table 2 IOT Output Codes

Chain-Link	Component Name	Operational Description	Time Out	Cyclic ?	Conflicts
010-008	Fuser Motor(79mm Speed)	Fuser Motor rotation operation. It rotates at 79mm/s (+1.7%). [Ref Clk] 668.163Hz	-	X	010-001, 010-002, 010-003, 010-004, 010-005, 010-006, 010-007, 094-012, 094-013
010-009	P/Roll Latch ON	P/Roll Latch ON operation At the P/Roll Latch ON position, Latch Motor automatically stops.	-	X	010-010, 010-011
010-010	P/Roll Latch OFF	P/Roll Latch OFF operation At the P/Roll Latch OFF position, Latch Motor automatically stops.	-	X	010-009, 010-011
010-011	P/Roll Half Latch	P/Roll Half Latch operation At the P/Roll Half Latch operation, Latch Motor automatically stops.	-	X	010-009, 010-010
042-001	MainMotor(79mm/s)	Main Motor rotary drive operation: A start instruction triggers a rotary drive operation (79mm/s). A stop instruction stops it.	-	X	042-002, 042-003, 042-004, 042-005, 042-006
042-002	MainMotor(121mm/s)	Main Motor rotary drive operation: A start instruction triggers a rotary drive operation (121mm/s). A stop instruction stops it.	-	X	042-001, 042-003, 042-004, 042-005, 042-006
042-003	MainMotor(175mm/s)	Main Motor rotary drive operation: A start instruction triggers a rotary drive operation (175mm/s). A stop instruction stops it.	-	X	042-001, 042-002, 042-004, 042-005, 042-006
042-004	Main Motor(200mm/s)	Main Motor solo rotation operation: A start instruction triggers a rotary drive operation (200mm/s). A stop instruction stops it.	-	X	042-001, 042-002, 042-003, 042-005, 042-006
042-005	Main Motor(228mm/s)	Main Motor solo rotation operation: A start instruction triggers a rotary drive operation (228mm/s). A stop instruction stops it.	-	X	042-001, 042-002, 042-003, 042-004, 042-006

Table 2 IOT Output Codes

Chain-Link	Component Name	Operational Description	Time Out	Cyclic ?	Conflicts
042-006	Main Motor(255mm/s)	Main Motor solo rotation operation: A start instruction triggers a rotary drive operation (255mm/s). A stop instruction stops it.	-	X	042-001, 042-002, 042-003, 042-004, 042-005
042-007	IBT Fan	IBT Fan rotation operation: A start instruction triggers its rotation. A stop instruction stops it.	-	X	-
042-008	HV Fan	HV Fan rotation operation: A start instruction triggers its high-speed rotation. A stop instruction changes it to low-speed rotation.	-	X	-
042-009	Process2 Fan	Process2 Fan rotation operation: A start instruction triggers its rotation. A stop operation stops it.	-	X	-
042-010	LVPS Fan	LVPS Fan rotation operation: A start instruction triggers its rotation. A stop instruction stops it. *However, triggered by a start instruction the FAN rotates at high speed and triggered by a stop one it rotates at low speed.	-	X	-
042-011	Fuser Fan	Fuser Fan rotation speed changing operation: A start instruction triggers it to rotate at PWM 90%. After 2 sec it begins to rotate at duty xx%. xx% represents max PS NVM value for a product. A stop instruction stops the FAN operation.	-	X	042-012, 042-013, 042-014, 042-015, 042-016, 042-017, 042-018, 042-019, 042-020, 042-021, 042-022, 042-023, 042-024, 042-025, 042-026

Table 2 IOT Output Codes

Chain-Link	Component Name	Operational Description	Time Out	Cyclic ?	Conflicts
042-012	MHVPS Fan	MHVPS Fan rotation speed changing operation: A start instruction triggers it to rotate at PWM 90%. After 2 sec it begins to rotate at duty xx%. xx% represents max PS NVM value for a product. A stop instruction stops the FAN operation.	-	X	042-011, 042-013, 042-014, 042-015, 042-016, 042-017, 042-018, 042-019, 042-020, 042-021, 042-022, 042-023, 042-024, 042-025, 042-026
042-013	Process2 Fan	Process2 Fan rotation operation: A start instruction triggers its high-speed rotation. After 2 sec it switches to low-speed rotation. A stop instruction stops it.	-	X	042-011, 042-012, 042-014, 042-015, 042-016, 042-017, 042-018, 042-019, 042-020, 042-021, 042-022, 042-023, 042-024, 042-025, 042-026
042-014	LVPS Exhaust Fan	LVPS Exhaust Fan rotation operation: A start instruction triggers its rotation. A stop instruction stops it.	-	X	042-011, 042-012, 042-013, 042-015, 042-016, 042-017, 042-018, 042-019, 042-020, 042-021, 042-022, 042-023, 042-024, 042-025, 042-026
042-015	Rear Bottom Fan	Rear Bottom Fan rotation operation: A start instruction triggers its rotation. A stop instruction stops it.	-	X	042-011, 042-012, 042-013, 042-014, 042-016, 042-017, 042-018, 042-019, 042-020, 042-021, 042-022, 042-023, 042-024, 042-025, 042-026

Table 2 IOT Output Codes

Chain-Link	Component Name	Operational Description	Time Out	Cyclic ?	Conflicts
042-016	IH Intake Fan	IH Intake Fan rotation speed changing operation: A start instruction triggers it to rotate at PWM 90%. After 2 sec it begins to rotate at duty xx%. xx% represents max PS NVM value for a product. A stop instruction stops the FAN operation.	-	X	042-011, 042-012, 042-013, 042-014, 042-015, 042-017, 042-018, 042-019, 042-020, 042-021, 042-022, 042-023, 042-024, 042-025, 042-026
042-017	IH Exhaust Fan	IH Exhaust Fan rotation speed changing operation: A start instruction triggers it to rotate at PWM 90%. After 2 sec it begins to rotate at duty xx%. xx% represents max PS NVM value for a product. A stop instruction stops the FAN operation.	-	X	042-011, 042-012, 042-013, 042-014, 042-015, 042-016, 042-018, 042-019, 042-020, 042-021, 042-022, 042-023, 042-024, 042-025, 042-026
042-018	LVPS Fan	LVPS Fan rotation operation: A start instruction triggers its rotation. A stop one stops it. *However, triggered by a start instruction the FAN rotates at high speed and triggered by a stop one it rotates at low speed.	-	X	042-011, 042-012, 042-013, 042-014, 042-015, 042-016, 042-017, 042-019, 042-020, 042-021, 042-022, 042-023, 042-024, 042-025, 042-026
042-019	IBT Fan	IBT Fan rotation operation: A start instruction triggers its rotation. A stop one stops it	-	X	042-011, 042-012, 042-013, 042-014, 042-015, 042-016, 042-017, 042-018, 042-020, 042-021, 042-022, 042-023, 042-024, 042-025, 042-026

Table 2 IOT Output Codes

Chain-Link	Component Name	Operational Description	Time Out	Cyclic ?	Conflicts
042-020	SUCTION_Drive Fan	Suction or Drive Fan rotation operation: A start instruction triggers a rotation operation. A stop one stops it.	-	X	042-011, 042-012, 042-013, 042-014, 042-015, 042-016, 042-017, 042-018, 042-019, 042-021, 042-022, 042-023, 042-024, 042-025, 042-026
042-021	Cartridge Fan	Cartridge Fan rotation speed changing operation: A start instruction triggers it to rotate at PWM 90%. After 2 sec it begins to rotate at duty xx%. xx% represents max PS NVM value for a product. A stop instruction stops the FAN operation.	-	X	042-011, 042-012, 042-013, 042-014, 042-015, 042-016, 042-017, 042-018, 042-019, 042-020, 042-022, 042-023, 042-024, 042-025, 042-026
042-022	Process1 Fan	Process1 Fan rotation speed changing operation: A start instruction triggers it to rotate at PWM 90%. After 2 sec it begins to rotate at duty xx%. xx% represents max PS NVM value for a product. A stop instruction stops the FAN operation.	-	X	042-011, 042-012, 042-013, 042-014, 042-015, 042-016, 042-017, 042-018, 042-019, 042-020, 042-021, 042-023, 042-024, 042-025, 042-026
042-024	C Exhaust Fan	C Exhaust Fan rotation operation: A start instruction triggers its rotation. A stop one stops it.	-	X	042-011, 042-012, 042-013, 042-014, 042-015, 042-016, 042-017, 042-018, 042-019, 042-020, 042-021, 042-022, 042-023, 042-025, 042-026

Table 2 IOT Output Codes

Chain-Link	Component Name	Operational Description	Time Out	Cyclic ?	Conflicts
042-025	NOHAD FAN Fail Detection	Rotates all Fans together and performs Failure Detection. A start instruction triggers the FANs to rotate. After 5 sec of operation, performs Fail Detection. After doing the detection process, stops the rotating FANs. Informs the Controller of Fault Code (Chain/Link No) associated with failed FAN. *For Fault Codes reported, see DC125. FANs to be checked for a failure: Fuser Fan Drive(Suction) Fan Rear Bottom Fan MHVPS Fan IBT Fan Process2 Fan LVPS Exhaust Fan Cartridge Fan Process1 Fan C-EXHAUST Fan IH Intake Fan IH Exhaust Fan LH Fan	-	X	042-011, 042-012, 042-013, 042-014, 042-015, 042-016, 042-017, 042-018, 042-019, 042-020, 042-021, 042-022, 042-023, 042-024, 042-026
042-026	LH Fan	LH Fan rotation operation: A start instruction triggers its rotation at Duty 90%. A stop instruction stops it.	-	X	042-011, 042-012, 042-013, 042-014, 042-015, 042-016, 042-017, 042-018, 042-019, 042-020, 042-021, 042-022, 042-023, 042-024, 042-025
061-001	LPH Forced ON (Cin100%)	Forces LPH to turn ON. (an entirely solid pattern)		X	061-002, 061-003, 061-004
061-002	LPH Forced ON (Cin50%)	Forces LPH to turn ON. (Cin50%)		X	061-001, 061-003, 061-004

Table 2 IOT Output Codes

Chain-Link	Component Name	Operational Description	Time Out	Cyclic ?	Conflicts
061-003	LPH Forced ON (streak grading pattern)	Forces LPH to turn ON. (a streak grading pattern)		X	061-001, 061-002, 061-004
061-004	LPH Forced ON (thyristor transfer)	Performs only thyristor transfer.		X	061-001, 061-002, 061-003
062-002	IIT Exposure Lamp	Lamp ON 180 sec -> Auto OFF	O	X	-
062-005	IIT Scan Motor (in scan direction)	Move 50mm in scan direction from current position -> Auto OFF	O	X	062-006
062-006	IIT Scan Motor (in return direction)	Move 50mm in return direction from current position -> Auto OFF	O	X	062-005
062-015	Lamp Cooling Fan	Lamp cooling fan rotates at high speed			
062-017	CCD Cooling Fan	CCD cooling fan rotates at high speed.			
062-086	IIT Image Area	IMG-AREA signal output	X	X	-
062-091	Exchange To ADF	Turns ON the signal that instructs on relocating documents to DADF.	X	X	-
071-001	#1 Feed Motor 2-phase (CW2) in Feed direction	Drives the Motor in 2-phase excitation, in Feed direction, at feed speed. However, if speed is specified in NVM, the motor is driven at speed of target frequency specified there.	-	X	071-002, 071-003, 071-004, 075-001~075-004

Table 2 IOT Output Codes

Chain-Link	Component Name	Operational Description	Time Out	Cyclic ?	Conflicts
071-002	#1 Feed Motor 2-phase (CCW2) in Lift Up direction	Drives the Motor in 2-phase excitation, in Lift Up direction, at Lift Up speed. However, if speed is specified in NVM, the motor is driven at speed of target frequency specified there. <Constraints> • If Level Sensor is On when the Motor tries to start driving, it does not operate. • If Level Sensor On is detected, the Motor steps down to 0 pps and finishes operating.	-	X	071-001, 071-003, 071-004, 075-001~075-004
071-003	#1 Feed Motor 1-2 phase (CW1-2) in Feed direction	Drives the Motor in 1-2 phase excitation, in Feed direction, at feed speed. However, if speed is specified in NVM, the motor is driven at speed of target frequency specified there.	-	X	071-001, 071-002, 071-004, 075-001~075-004
071-004	#1 Feed Motor 1-2 phase (CCW1-2) in Lift Up direction	Drives the Motor in 1-2 phase excitation, in Lift Up direction, at Lift Up speed. However, if speed is specified in NVM, the motor is driven at speed of target frequency specified there. <Constraints> • If Level Sensor is On when the Motor tries to start driving, it does not operate. • If Level Sensor On is detected, the Motor steps down to 0 pps and finishes operating.	-	X	071-001, 071-002, 071-003, 075-001~075-004

Table 2 IOT Output Codes

Chain-Link	Component Name	Operational Description	Time Out	Cyclic ?	Conflicts
072-001	#2 Feed Motor 2-phase (CW2) in Feed direction	Drives the Motor in 2-phase excitation, in Feed direction, at feed speed. However, if speed is specified in NVM, the motor is driven at speed of target frequency specified there.	-	X	072-002, 072-003, 072-004
072-002	#2 Feed Motor 2-phase (CCW2) in Lift Up direction	Drives the Motor in 2-phase excitation, in Lift Up direction, at Lift Up speed. However, if speed is specified in NVM, the motor is driven at speed of target frequency specified there. <Constraints> • If Level Sensor is On when the Motor tries to start driving, it does not operate. • If Level Sensor On is detected, the Motor steps down to 0 pps and finishes operating.	-	X	072-001, 072-003, 072-004
072-003	#2 Feed Motor 1-2 phase (CW1-2) in Feed direction	Drives the Motor in 1-2 phase excitation, in Feed direction, at feed speed. However, if speed is specified in NVM, the motor is driven at speed of target frequency specified there.	-	X	072-001, 072-002, 072-004

Table 2 IOT Output Codes

Chain-Link	Component Name	Operational Description	Time Out	Cyclic ?	Conflicts
072-004	#2 Feed Motor 1-2 phase (CCW1-2) in Lift Up direction	Drives the Motor in 1-2 phase excitation, in Lift Up direction, at Lift Up speed. However, if speed is specified in NVM, the motor is driven at speed of target frequency specified there. <Constraints> • If Level Sensor is On when the Motor tries to start driving, it does not operate. • If Level Sensor On is detected, the Motor steps down to 0 pps and finishes operating.	-	X	072-001, 072-002, 072-003
073-001	#3 Feed Motor 2-phase (CW2) in Feed direction	Drives the Motor in 2-phase excitation, in Feed direction, at feed speed. However, if speed is specified in NVM, the motor is driven at speed of target frequency specified there.	-	X	072-002, 072-003, 072-004
073-002	#3 Feed Motor 2-phase (CCW2) in Lift Up direction	Drives the Motor in 2-phase excitation, in Lift Up direction, at Lift Up speed. However, if speed is specified in NVM, the motor is driven at speed of target frequency specified there. <Constraints> • If Level Sensor is On when the Motor tries to start driving, it does not operate. • If Level Sensor On is detected, the Motor steps down to 0 pps and finishes operating.	-	X	072-001, 072-003, 072-004

Table 2 IOT Output Codes

Chain-Link	Component Name	Operational Description	Time Out	Cyclic ?	Conflicts
073-003	#3 Feed Motor 1-2 phase (CW1-2) in Feed direction	Drives the Motor in 1-2 phase excitation, in Feed direction, at feed speed. However, if speed is specified in NVM, the motor is driven at speed of target frequency specified there.	-	X	072-001, 072-002, 072-004
073-004	#3 Feed Motor 1-2 phase (CCW1-2) in Lift Up direction	Drives the Motor in 1-2 phase excitation, in Lift Up direction, at Lift Up speed. However, if speed is specified in NVM, the motor is driven at speed of target frequency specified there. <Constraints> • If Level Sensor is On when the Motor tries to start driving, it does not operate. • If Level Sensor On is detected, the Motor steps down to 0 pps and finishes operating.	-	X	072-001, 072-002, 072-003
074-001	#4 Feed Motor 2-phase (CW2) in Feed direction	Drives the Motor in 2-phase excitation, in Feed direction, at feed speed. However, if speed is specified in NVM, the motor is driven at speed of target frequency specified there.	-	X	072-002, 072-003, 072-004

Table 2 IOT Output Codes

Chain-Link	Component Name	Operational Description	Time Out	Cyclic ?	Conflicts
074-002	#4 Feed Motor 2-phase (CCW2) in Lift Up direction	Drives the Motor in 2-phase excitation, in Lift Up direction, at Lift Up speed. However, if speed is specified in NVM, the motor is driven at speed of target frequency specified there. <Constraints> • If Level Sensor is On when the Motor tries to start driving, it does not operate. • If Level Sensor On is detected, the Motor steps down to 0 pps and finishes operating.	-	X	072-001, 072-003, 072-004
074-003	#4 Feed Motor 1-2 phase (CW1-2) Feed direction	Drives the Motor in 1-2 phase excitation, in Feed direction, at feed speed. However, if speed is specified in NVM, the motor is driven at speed of target frequency specified there.	-	X	072-001, 072-002, 072-004
074-004	#4 Feed Motor 1-2 phase (CCW1-2) Lift Up direction	Drives the Motor in 1-2 phase excitation, in Lift Up direction, at Lift Up speed. However, if speed is specified in NVM, the motor is driven at speed of target frequency specified there. <Constraints> • If Level Sensor is On when the Motor tries to start driving, it does not operate. • If Level Sensor On is detected, the Motor steps down to 0 pps and finishes operating.	-	X	072-001, 072-002, 072-003, 071-001~071-004

Table 2 IOT Output Codes

Chain-Link	Component Name	Operational Description	Time Out	Cyclic ?	Conflicts
075-001	MSI Feed Motor 2-phase (CW2) Feed direction	Drives the Motor in 2-phase excitation, in Feed direction, at feed speed. However, if speed is specified in NVM, the motor is driven at speed of target frequency specified there.		X	075-002, 075-003, 075-004, 071-001, 071-002, 071-003, 071-004
075-002	MSI Feed Motor 2-phase (CCW2) Nudger Up/Down direction	Drives the Motor in 2-phase excitation, in Nudger Up/Down direction, at Nudger Up/Down speed. However, if speed is specified in NVM, the motor is driven at speed of target frequency specified there.		X	075-001, 075-003, 075-004, 071-001, 071-002, 071-003, 071-004
075-003	MSI Feed Motor 1-2 phase (CW1-2) Feed direction	Drives the Motor in 1-2 phase excitation, in Feed direction, at feed speed. However, if speed is specified in NVM, the motor is driven at speed of target frequency specified there.	-	X	075-001, 075-002, 075-004, 071-001~071-004
075-004	MSI Feed Motor 1-2 phase (CCW1-2) Nudger Up/Down direction	Drives the Motor in 1-2 phase excitation, in Nudger Up/Down direction, at Nudger Up/Down speed. However, if speed is specified in NVM, the motor is driven at speed of target frequency specified there.	-	X	075-001, 075-002, 075-003, 071-001~071-004
077-001	Take Away Clutch	Turns ON Take Away Clutch. Combining this with [Component] Main Drive Motor[042-XXX] enables #1Take Away Roll and MSI Take Away Roll to drive.	-	X	-

Table 2 IOT Output Codes

Chain-Link	Component Name	Operational Description	Time Out	Cyclic ?	Conflicts
077-002	Regi Clutch	Turns ON Regi Clutch. Combining this with [Component] Main Drive Motor[042-XXX] enables Regi Roll to drive.	-	X	-
077-003	Exit Gate Solenoid	Switches Exit Gate. (Strong Current Value (based on NVM set value (Duty)) is used for 110msec from the start of pulling in the solenoid. After that it switches to Weak Current Value (based on NVM set value (Duty) (The actual operation is as specified.)) Off: to #1Exit Output. On: to #2Exit Unit.		X	
077-004	Face Up Gate Solenoid	Switches Face Up Gate. (Strong Current Value (based on NVM set value (Duty)) is used for 110msec from the start of pulling in the solenoid. After that it switches to Weak Current Value (based on NVM set value (Duty) (The actual operation is as specified.)) Off: to #2Exit. On: to Face UP Output.	-	X	
077-030	TM T/A CL	Turns ON TM T/A Clutch.	-	X	
077-031	TM T/A Motor(Low only)	Drives TM T/A Motor.	-	X	
077-032	TM Feed Ready signal output	Turns ON the Feed Ready signal.	-	X	
077-033	IOT Regi Stop signal output	Turns ON the Regi Stop signal.	-	X	
077-034	IOT Feed ON signal output	Turns ON the Feed ON signal.	-	X	
077-035	TM T/A Motor1 full speed (High only)	Drives TM T/A Motor1 at full speed (2-phase excitation).		X	
077-036	TM T/A Motor1 half speed (High only)	Drives TM T/A Motor1 at half speed (1-2 phase excitation).		X	

Table 2 IOT Output Codes

Chain-Link	Component Name	Operational Description	Time Out	Cyclic ?	Conflicts
077-037	TM T/A Motor2 full speed (High TTM only)	Drives TM T/A Motor2 at full speed (2-phase excitation).		X	
077-038	TM T/A Motor2 half speed (High TTM only)	Drives TM T/A Motor2 at half speed (1-2 phase excitation).		X	
077-040	#1 OCT Motor (CW 1-2 phase excitation mode)	Moves #1 Exit Roll in the axial direction. (On for 1000msec and timeout.) CW: Moves Exit Roll to the O/B side of M/C. Performs in 1-2 phase excitation mode. *If speed is specified in NVM, the motor is driven at speed of target frequency specified there. *Specify drive profile in NVM.	1000ms	X	077-041, 077-042, 077-043
077-041	#1 OCT Motor (CCW 1-2 phase excitation mode)	Moves #1 Exit Roll in the axial direction. (On for 1000msec and timeout.) CCW: Moves Exit Roll to the I/B side of M/C. Performs in 1-2 phase excitation mode. *If speed is specified in NVM, the motor is driven at speed of target frequency specified there. *Specify drive profile in NVM.	1000ms	X	077-040, 077-042, 077-043
077-042	#1 OCT Motor (CW 2-phase excitation mode)	Moves #1 Exit Roll in the axial direction. (On for 1000msec then time-out.) CW: Moves Exit Roll to the O/B side of M/C. Performs in 2-phase excitation mode. *If speed is specified in NVM, the motor is driven at speed of target frequency specified there. *Specify drive profile in NVM.	1000ms	X	077-040, 077-041, 077-043

Table 2 IOT Output Codes

Chain-Link	Component Name	Operational Description	Time Out	Cyclic ?	Conflicts
077-043	#1 OCT Motor (CCW 2-phase excitation mode)	Moves #1 Exit Roll in the axial direction. (On for 1000msec then time-out.) CCW: Moves Exit Roll to the I/B side of M/C. Performs in 2-phase excitation mode. *If speed is specified in NVM, the motor is driven at speed of target frequency specified there. *Specify drive profile in NVM.	1000ms	X	077-040, 077-041, 077-042
077-045	#2 OCT Motor (CW 1-2 phase excitation mode)	Moves #2 Exit Roll in the axial direction. (On for 1000msec then time-out.) CW: Moves Exit Roll to the O/B side of M/C. Performs in 1-2 phase excitation mode. *If speed is specified in NVM, the motor is driven at speed of target frequency specified there. *Specify drive profile in NVM.	1000ms	X	077-046, 077-047, 077-048
077-046	#2 OCT Motor (CCW 1-2 phase excitation mode)	Moves #2 Exit Roll in the axial direction. (On for 1000msec then time-out.) CCW: Moves Exit Roll to the I/B side of M/C. Performs in 1-2 phase excitation mode. *If speed is specified in NVM, the motor is driven at speed of target frequency specified there. *Specify drive profile in NVM.	1000ms	X	077-045, 077-047, 077-048

Table 2 IOT Output Codes

Chain-Link	Component Name	Operational Description	Time Out	Cyclic ?	Conflicts
077-047	#2 OCT Motor (CW 2-phase excitation mode)	Moves #2 Exit Roll in the axial direction. (On for 1000msec then time-out.) CW: Moves Exit Roll to the O/B side of M/C. Performs in 2-phase excitation mode. *If speed is specified in NVM, the motor is driven at speed of target frequency specified there. *Specify drive profile in NVM.	1000ms	X	077-045, 077-046, 077-048
077-048	#2 OCT Motor (CCW 2-phase excitation mode)	Moves #2 Exit Roll in the axial direction. (On for 1000msec then time-out.) CCW: Moves Exit Roll to the I/B side of M/C. Performs in 2-phase excitation mode. *If speed is specified in NVM, the motor is driven at speed of target frequency specified there. *Specify drive profile in NVM.	1000ms	X	077-045, 077-046, 077-047
077-050	Take Away Motor 1-2 phase (CW2/Forward)	Drives Take Away Motor in 1-2 phase excitation, forward at max speed. (in output direction) However, if speed is specified in NVM, the motor is driven at speed of target frequency specified there.		X	077-051, 077-052, 077-053
077-060	Exit2 Drive Motor 1-2 phase (CW2/Forward)	Drives Exit2 Drive Motor in 1-2 phase excitation, forward at max speed. (in output direction) However, if speed is specified in NVM, the motor is driven at speed of target frequency specified there.		X	077-061, 077-062, 077-063

Table 2 IOT Output Codes

Chain-Link	Component Name	Operational Description	Time Out	Cyclic ?	Conflicts
077-061	Exit2 Drive Motor 1-2 phase (CCW2/ Reverse)	Drives Exit2 Drive Motor in 1-2 phase excitation, reverse at max speed. (in pull-in direction) However, if speed is specified in NVM, the motor is driven at speed of target frequency specified there.		X	077-060, 077-062, 077-063
077-062	Exit2 Drive Motor 2-phase (CW2/Forward)	Drives Exit2 Drive Motor in 2-phase excitation, forward at max speed. (in output direction) However, if speed is specified in NVM, the motor is driven at speed of target frequency specified there.		X	077-060, 077-061, 077-063
077-063	Exit2 Drive Motor 2-phase (CCW2/ Reverse)	Drives Exit2 Drive Motor in 2-phase excitation, reverse at max speed. (in pull-in direction) However, if speed is specified in NVM, the motor is driven at speed of target frequency specified there.		X	077-060, 077-061, 077-062
077-071	Duplex Drive Motor 1-2 phase (CCW2/ Reverse)	Drives Duplex Drive Motor in 1-2 phase excitation, reverse at max speed. (in pull-in direction) However, if speed is specified in NVM, the motor is driven at speed of target frequency specified there.		X	077-070, 077-072, 077-073
077-073	Duplex Drive Motor 2 phase (CCW2/ Reverse)	Drives Duplex Drive Motor in 2-phase excitation, reverse at max speed. (in pull-in direction) However, if speed is specified in NVM, the motor is driven at speed of target frequency specified there.		X	077-070, 077-071, 077-072

Table 2 IOT Output Codes

Chain-Link	Component Name	Operational Description	Time Out	Cyclic ?	Conflicts
078-003	HCF1 Feed Motor: Feed	Drives the Motor at frequency of 2320PPS (307.5mm/s) in Feed direction.	-	X	078-002
078-004	HCF1 Feed Motor: Lift Up	Drives the Motor at frequency of 3395PPS (450mm/s) in Lift Up direction. Drives the Motor only when HCF1 Tray Level Sensor is Off, not when the sensor is On. Stops driving it if the sensor turns On when it is driving. Does not drive it when HCF1 Tray In Sensor is Off.	-	X	078-001
078-096	HCF1 T/A Motor (400mm/s)	Drives HCF1 T/A Roll at 400mm/s.	-	X	
089-001	MOB On/Off(Low-Power)	Controls a set of MOB IN/ OUT LEDs for diffused light.	-	X	089-002
089-002	MOB On/Off(High-Power)	Controls a set of MOB IN/ OUT LEDs for diffused light.	-	X	089-001
091-001	BCR DC Y	BCR DC Y output (Output value is set to High: 225 speed/Low: 175 speed.) Output Value: [NVM]BCR_DC_OUT[Y](752-002) ***NOTE:*** *Fault code 045-313 will occur if BCR output is performed without turning the YMC drum motor. Execute DC330 (091-027) to turn the YMC drum.*	-	X	091-009, 091-010, 091-044, 091-045

Table 2 IOT Output Codes

Chain-Link	Component Name	Operational Description	Time Out	Cyclic ?	Conflicts
091-002	BCR DC M	BCR DC M output (Output value is set to High: 225 speed/Low: 175 speed.) Output Value: [NVM]BCR_DC_OUT[M](752-003) ***NOTE:*** *Fault code 045-313 will occur if BCR output is performed without turning the YMC drum motor. Execute DC330 (091-027) to turn the YMC drum.*	-	X	091-009, 091-011, 091-044, 091-045
091-003	BCR DC C	BCR DC C output (Output value is set to High: 225 speed/Low: 175 speed.) Output Value: [NVM]BCR_DC_OUT[C](752-004) ***NOTE:*** *Fault code 045-313 will occur if BCR output is performed without turning the YMC drum motor. Execute DC330 (091-027) to turn the YMC drum.*	-	X	091-009, 091-012, 091-044, 091-045
091-004	BCR DC K	BCR DC K output (Output value is set to High: 225 speed/Low: 175 speed.) Output Value: [NVM]BCR_DC_OUT[K](752-005) ***NOTE:*** *Fault code 045-313 will occur if BCR output is performed without turning the YMC drum motor. Execute DC330 (091-027) to turn the YMC drum.*	-	X	091-009, 091-013, 091-044, 091-045

Table 2 IOT Output Codes

Chain-Link	Component Name	Operational Description	Time Out	Cyclic ?	Conflicts
091-005	BCR AC Y	BCR AC output (Output value is set to High: 225 speed/Low: 175 speed.) Output Value: [NVM]#Y_BCR AC 225/175 Out(751-xxx/xxx) Frequency: [NVM]PWM 225/175 Clock Ratio(751-xxx/xxx) Simultaneously outputs BCR AC Clock at frequency below: Frequency: [NVM]BCR AC 225/175 Clock Ratio(751-xxx/xxx) ***NOTE:*** *Fault code 045-313 will occur if BCR output is performed without turning the YMC drum motor. Execute DC330 (091-027) to turn the YMC drum.*	-	X	091-009, 091-010, 091-044, 091-045
091-006	BCR AC M	BCR AC output (Output value is set to High: 225 speed/Low: 175 speed.) Output Value: [NVM]#M_BCR AC 225/175 Out(751-xxx/xxx) Frequency: [NVM]PWM 225/175 Clock Ratio(751-xxx/xxx) Simultaneously outputs BCR AC Clock at frequency below: Frequency:[NVM]BCR AC 225/175 Clock Ratio(751-xxx/xxx) ***NOTE:*** *Fault code 045-313 will occur if BCR output is performed without turning the YMC drum motor. Execute DC330 (091-027) to turn the YMC drum.*	-	X	091-009, 091-011, 091-044, 091-045

Table 2 IOT Output Codes

Chain-Link	Component Name	Operational Description	Time Out	Cyclic ?	Conflicts
091-007	BCR AC C	BCR AC output (Output value is set to High: 225 speed/Low: 175 speed.) Output Value: [NVM]#C_BCR AC 225/175 Out(751-xxx/xxx) Frequency:[NVM]PWM 225/175Clock Ratio(751-xxx/xxx) Simultaneously outputs BCR AC Clock at frequency below: Frequency:[NVM]BCR AC 225/175 Clock Ratio(751-xxx/xxx) ***NOTE:*** *Fault code 045-313 will occur if BCR output is performed without turning the YMC drum motor. Execute DC330 (091-027) to turn the YMC drum.*	-	X	091-009, 091-012, 091-044, 091-045
091-008	BCR AC K	BCR AC output (Output value is set to High: 225 speed/Low: 175 speed.) Output Value: [NVM]#K_BCR AC 225/175 Out(751-xxx/xxx) Frequency: [NVM]PWM 225/175 Clock Ratio(751-xxx/xxx) Simultaneously outputs BCR AC Clock at frequency below: Frequency: [NVM]BCR AC 225/175 Clock Ratio(751-xxx/xxx) ***NOTE:*** *Fault code 045-313 will occur if BCR output is performed without turning the YMC drum motor. Execute DC330 (091-027) to turn the YMC drum.*	-	X	091-009, 091-013, 091-044, 091-045

Table 2 IOT Output Codes

Chain-Link	Component Name	Operational Description	Time Out	Cyclic ?	Conflicts
091-009	BCR DC/AC YMCK	<Combined-Component Control> BCR DC/AC YMCK output (Output value is set to High: 225 speed/Low: 175 speed.) Operates the combined components below: [Component]BCR DC Y/M/C/K (091-001~004) [Component]BCR AC Y/M/C/K (091-005~008) ***NOTE:*** *Fault code 045-313 will occur if BCR output is performed without turning the YMC drum motor. Execute DC330 (091-027) to turn the YMC drum.*	-	X	091-001, 091-002, 091-003, 091-004, 091-005, 091-006, 091-007, 091-008, 091-010, 091-011, 091-012, 091-013, 091-044, 091-045
091-010	BCR DC/AC Y	<Combined-Component Control> BCR DC/AC Y output Operates the combined components below: [Component]BCR DC Y (091-001) [Component]BCR AC Y (091-005) ***NOTE:*** *Fault code 045-313 will occur if BCR output is performed without turning the YMC drum motor. Execute DC330 (091-027) to turn the YMC drum.*	-	X	091-001, 091-005, 091-009, 091-044, 091-045

Table 2 IOT Output Codes

Chain-Link	Component Name	Operational Description	Time Out	Cyclic ?	Conflicts
091-011	BCR DC/AC M	<Combined-Component Control> BCR DC/AC M output Operates the combined components below: [Component]BCR DC M (091-002) [Component]BCR AC M (091-006) ***NOTE:*** *Fault code 045-313 will occur if BCR output is performed without turning the YMC drum motor. Execute DC330 (091-027) to turn the YMC drum.*	-	X	091-002, 091-006, 091-009, 091-044, 091-045
091-012	BCR DC/AC C	<Combined-Component Control> BCR DC/AC C output Operates the combined components below: [Component]BCR DC C (091-003) [Component]BCR AC C (091-007) ***NOTE:*** *Fault code 045-313 will occur if BCR output is performed without turning the YMC drum motor. Execute DC330 (091-027) to turn the YMC drum.*	-	X	091-003, 091-007, 091-009, 091-044, 091-045

Table 2 IOT Output Codes

Chain-Link	Component Name	Operational Description	Time Out	Cyclic ?	Conflicts
091-013	BCR DC/AC K	<Combined-Component Control> BCR DC/AC K output (Output value is set to High: 225 speed/Low: 175 speed.) Operates the combined components below: [Component]BCR DC K (091-004) [Component]BCR AC K (091-008) ***NOTE:*** *Fault code 045-313 will occur if BCR output is performed without turning the YMC drum motor. Execute DC330 (091-027) to turn the YMC drum.*	-	X	091-004, 091-008, 091-009, 091-044, 091-045
091-014	DRUM YMC/DRUM K/IBT MOT(79 Speed)	Output of DRUM YMC MOT/DRUM K MOT/IBT MOT (79 speed) Drum YMC/K Motor rotation operation at Process Speed 79 Sets 121 speed depending on the I/O combination. (Clock reflects the following: NVM(741-001: IBT Motor Speed Fine Adjustment 79 speed) NVM(741-014: Drum YMC Motor Speed Fine Adjustment 79 speed 1) NVM(741-014: Drum K Motor Speed Fine Adjustment 79 speed 1)	-	X	091-015~091-037, 019-044, 091-045

Table 2 IOT Output Codes

Chain-Link	Component Name	Operational Description	Time Out	Cyclic ?	Conflicts
091-015	DRUM YMC/DRUM K/IBT MOT(121 Speed)	Output of DRUM YMC MOT/DRUM K MOT/IBT MOT (121 speed) Drum YMC/K Motor rotation operation at Process Speed 121 Sets 121 speed depending on the I/O combination. (Clock reflects the following: NVM(741-002: IBT Motor Speed Fine Adjustment 121 speed) NVM(741-015: Drum YMC Motor Speed Fine Adjustment 121 speed 1) NVM(741-015:Drum K Motor Speed Fine Adjustment 121 speed 1)	-	X	091-014, 091-016~091-037, 091-044, 091-045
091-016	DRUM YMC/DRUM K/IBT MOT(175 Speed)	Output of DRUM YMC MOT/DRUM K MOT/IBT MOT (175 speed) Drum YMC/K Motor rotation operation at Process Speed 175 Sets 175 speed depending on the I/O combination. (Clock reflects the following: NVM(741-003: IBT Motor Speed Fine Adjustment 175 speed) NVM(741-016: Drum YMC Motor Speed Fine Adjustment 175 speed 1) NVM(741-016: Drum K Motor Speed Fine Adjustment 175 speed 1)	-	X	091-014, 091-015, 091-017~091-037, 091-044, 091-045, 091-048

Table 2 IOT Output Codes

Chain-Link	Component Name	Operational Description	Time Out	Cyclic ?	Conflicts
091-017	DRUM YMC/DRUM K/IBT MOT(200 Speed)	Output of DRUM YMC MOT/DRUM K MOT/IBT MOT (200 speed) Drum YMC/K Motor rotation operation at Process Speed 200 Sets 200 speed depending on the I/O combination. (Clock reflects the following: NVM(741-004:IBT Motor Speed Fine Adjustment 200 speed) NVM(741-017:Drum YMC Motor Speed Fine Adjustment 200 speed 1) NVM(741-017: Drum K Motor Speed Fine Adjustment 200 speed 1)	-		091-014~091-016, 091-018~091-037, 091-044,091-045
091-018	DRUM YMC/DRUM K/IBT MOT(225 Speed)	Output of DRUM YMC MOT/DRUM K MOT/IBT MOT (225 speed) Drum YMC/K Motor rotation operation at Process Speed 225 Sets 225 speed depending on the I/O combination. (Clock reflects the following: NVM(741-005: IBT Motor Speed Fine Adjustment 225 speed) NVM(741-018:Drum YMC Motor Speed Fine Adjustment 225 speed 1) NVM(741-018:Drum K Motor Speed Fine Adjustment 225 speed 1)	-	X	091-014, 091-015, 091-016, 091-017, 091-019, 091-020, 091-021, 091-022, 091-023, 091-024, 091-025, 091-026, 091-027, 091-028, 091-029, 091-030, 091-031, 091-032, 091-033, 091-034, 091-035, 091-036, 091-037, 091-044, 091-045
091-019	DRUM MOT/IBT MOT YMC(121Speed)reverse	Output of DRUM YMC MOT/DRUM K MOT/IBT MOT YMC (Reverse)	-	X	091-014~091-018, 091-020~091-037, 091-044,091-045

Table 2 IOT Output Codes

Chain-Link	Component Name	Operational Description	Time Out	Cyclic ?	Conflicts
091-020	DRUM MOT/IBT MOT K(79Speed)	Output of DRUM MOT/ IBT MOT (79 speed) Drum K Motor rotation operation at Process Speed 79 Sets 121 speed depending on the I/O combination. (Clock reflects the following: NVM(741-001: IBT Motor Speed Fine Adjustment 79 speed) NVM(741-014: Drum K Motor Speed Fine Adjustment 79 speed 1)	-	X	091-014~091-019, 091-021~091-025, 091-032~091-037, 091-044, 091-045
091-021	DRUM MOT/IBT MOT K(121Speed)	Output of DRUM MOT/ IBT MOT (121 speed) Drum K Motor rotation operation at Process Speed 121 Sets 121 speed depending on the I/O combination. (Clock reflects the following: NVM(741-002: IBT Motor Speed Fine Adjustment 121 speed) NVM(741-015: Drum K Motor Speed Fine Adjustment 121 speed 1)	-	X	091-014~091-020, 091-022~091-025, 091-032~091-037, 091-044,091-045

Table 2 IOT Output Codes

Chain-Link	Component Name	Operational Description	Time Out	Cyclic ?	Conflicts
091-022	DRUM MOT/IBT MOT K(175 Speed)	Output of DRUM MOT/ IBT MOT (175 speed) Drum K Motor rotation operation at Process Speed 175 Sets 175 speed depending on the I/O combination. (Clock reflects the following: NVM(741-003: IBT Motor Speed Fine Adjustment 175 speed) NVM(741-016: Drum K Motor Speed Fine Adjustment 175 speed 1)	-	X	091-014~091-021, 091-023~091-025, 091-032~091-037, 091-044,091-045
091-023	DRUM MOT/IBT MOT K(200 Speed)	Output of DRUM MOT/ IBT MOT (200 speed) Drum K Motor rotation operation at Process Speed 200 Sets 200 speed depending on the I/O combination. (Clock reflects the following: NVM(741-004: IBT Motor Speed Fine Adjustment 200 speed) NVM(741-017:Drum K Motor Speed Fine Adjustment 200 speed 0)	-		091-014~091-022, 091-024,091-025, 091-032~091-037, 091-044,091-045

Table 2 IOT Output Codes

Chain-Link	Component Name	Operational Description	Time Out	Cyclic ?	Conflicts
091-024	DRUM MOT/IBT MOT K(255 Speed)	Output of DRUM MOT/ IBT MOT (255 speed) Drum K Motor rotation operation at Process Speed 255 Sets 255 speed depending on the I/O combination. (Clock reflects the following: NVM(741-006: IBT Motor Speed Fine Adjustment 255 speed) NVM(741-019: Drum K Motor Speed Fine Adjustment 255 speed 2)	-	X	091-014~091-023, 091-025, 091-032~091-037, 091-044,091-045
091-025	DRUM MOT/IBT MOT K(121Speed)reverse	Reverse output of DRUM MOT/IBT MOT (121 speed)	-	X	091-014~091-024, 091-032~091-037, 091-044,091-045
091-026	DRUM YMC MOT ON(79_1mm/s)	Drum YMC Motor rotation operation at Process Speed 79_1 Sets 79_1 speed depending on the I/O combination. (Clock reflects NVM(741-014: Drum YMC Motor Speed Fine Adjustment 79 speed 1).)	-	X	091-014~091-019, 091-027~091-031, 091-044,091-045
091-027	DRUM YMC MOT ON(121_1mm/s)	Drum YMC Motor rotation operation at Process Speed 121_1 Sets 121_1 speed depending on the I/O combination. (Clock reflects NVM(741-015: Drum YMC Motor Speed Fine Adjustment 121 speed 1).)	-	X	091-014~091-019, 091-026, 091-028~091-031, 091-044, 091-045

Table 2 IOT Output Codes

Chain-Link	Component Name	Operational Description	Time Out	Cyclic ?	Conflicts
091-028	DRUM YMC MOT ON(175_1mm/s)	Drum YMC Motor rotation operation at Process Speed 175_1 Sets 175_1 speed depending on the I/O combination. (Clock reflects NVM(741-016: Drum YMC Motor Speed Fine Adjustment 175 speed 1).)	-	X	091-014~091-019, 091-026,091-027, 091-029~091-031, 091-044,091-045
091-029	DRUM YMC MOT ON(200_1mm/s)	Drum YMC Motor rotation operation at Process Speed 200_1 [l/ Sets 200_1 speed depending on the I/O combination. (Clock reflects NVM(741-017: Drum YMC Motor Speed Fine Adjustment 200 speed 1).)	-		091-014~091-019, 091-026~091-028, 091-030,091-031, 091-044,091-045
091-030	DRUM YMC MOT ON(225_1mm/s)	Drum YMC Motor rotation operation at Process Speed 225_1 Sets 225_1speed depending on the I/O combination. (Clock reflects NVM(741-018: Drum YMC Motor Speed Fine Adjustment 225 speed 1).)	-	X	091-014~091-019, 091-026~091-029, 091-031, 091-044,091-045
091-031	DRUM YMC MOT REVERSE ON	Drum YMC Motor rotation operation at Process Speed for reverse rotation Sets reverse rotation depending on the I/O combination. (Clock reflects NVM(741-015: Drum YMC Motor Speed Fine Adjustment 121 speed 1).) (Stops the motor after NVMms(751-184:Drum YMC Motor Reverse Time Adjustment.)) *Round a value in ms off to a value in 10ms.	See 751-184.	X	091-014~091-019, 091-026, 091-028~091-030, 091-044, 091-045

Table 2 IOT Output Codes

Chain-Link	Component Name	Operational Description	Time Out	Cyclic ?	Conflicts
091-032	DRUM K MOT ON(79_1mm/s)	Drum K Motor rotation operation at Process Speed 79_1 Sets 79_1 speed depending on the I/O combination. (Clock reflects NVM(741-014: Drum K Motor Speed Fine Adjustment 79 speed 1).)	-	X	091-014~091-025, 091-033~091-037, 091-044, 091-045
091-033	DRUM K MOT ON(121_1mm/s)	Drum K Motor rotation operation at Process Speed 121_1 Sets 121_1 speed depending on the I/O combination. (Clock reflects NVM(741-015: Drum K Motor Speed Fine Adjustment 121 speed 1).)	-	X	091-014~091-025, 091-032, 091-034~091-037, 091-035, 091-036, 091-044, 091-045
091-034	DRUM K MOT ON(175_1mm/s)	Drum K Motor rotation operation at Process Speed 175_1 Sets 175_1 speed depending on the I/O combination. (Clock reflects NVM(741-016: Drum K Motor Speed Fine Adjustment 175 speed 1).)	-	X	091-014~091-025, 091-032,091-033, 091-035~091-037, 091-044, 091-045
091-035	DRUM K MOT ON(200_1mm/s)	Drum K Motor rotation operation at Process Speed 200_1 Sets 200_1 speed depending on the I/O combination. (Clock reflects NVM(741-017: Drum K Motor Speed Fine Adjustment 200 speed 0).)	-		091-014~091-025, 091-032~091-034, 091-036,091-037, 091-044, 091-045

Table 2 IOT Output Codes

Chain-Link	Component Name	Operational Description	Time Out	Cyclic ?	Conflicts
091-036	DRUM K MOT ON(255_1mm/s)	Drum K Motor rotation operation at Process Speed 255_1 Sets 255_1 speed depending on the I/O combination. (Clock reflects NVM(741-019: Drum K Motor Speed Fine Adjustment 255 speed 2).)	-	X	091-014~091-025, 091-032~091-035, 091-037, 091-044, 091-045
091-037	DRUM K MOT REVERSE ON	Drum K Motor rotation operation at Process Speed for reverse rotation Sets reverse rotation depending on the I/O combination. (Clock reflects NVM(741-015: Drum K Motor Speed Fine Adjustment 121 speed.)) (Stops the motor after NVMms(751-184:Drum K Motor Reverse Time Adjustment).) *Round a value in ms off to a value in 10ms.	See 751-184.	X	091-014~091-025, 091-032~091-036, 091-044, 091-045
091-038	ERASE LAMP Y	Emission of ERASE LAMP Y	-	X	091-042, 091-044, 091-045
091-039	ERASE LAMP M	Emission of ERASE LAMP M	-	X	091-042, 091-044, 091-045
091-040	ERASE LAMP C	Emission of ERASE LAMP C	-	X	091-042, 091-044, 091-045
091-041	ERASE LAMP K	Emission of ERASE LAMP K	-	X	091-042, 091-044, 091-045
091-042	ERASE LAMP YMCK	Emission of ERASE LAMP YMCK	-	X	091-038, 091-039, 091-040, 091-041, 091-044, 091-045
091-043	AGITATOR MOT	AGITATOR MOT output	-	X	091-044, 091-045

Table 2 IOT Output Codes

Chain-Link	Component Name	Operational Description	Time Out	Cyclic ?	Conflicts
091-044	CF Leak Recovery	<Combined-Component Control> Operates when DRUM/ Dev MOT YMCK P/S is as specified in NVM(741-***:Drum YMC Motor Speed Fine Adjustment 121/175 speed 2) and NVM(741-***:Drum K Motor Speed Fine Adjust-ment 121/175 speed 2) and when IBT MOT P/S is 121/175[mm/s]. BCR AC/DC: Vcln output Outputs simultaneously DRUM/Dev MOT YMCK/ IBT MOT/ERASE LAMP YMCK/Agitator Mot/BCR AC YMCK. Outputs BCR DC YMCK 50ms after the start. Stops Erase Lamp after 540ms (121 speed)/ 400ms (175 speed). Then 300ms (121 speed)/ 200ms (175 speed) after that, stops BCR AC/DC. Stops all NVM(nxero_DrumRefres hTime)[s] after the start.	-	X	091-001~091-043, 091-045

Table 2 IOT Output Codes

Chain-Link	Component Name	Operational Description	Time Out	Cyclic ?	Conflicts
091-045	CRU CHG Agitator	<Combined-Component Control> Operates when DRUM/ Dev MOT YMCK P/S is as specified in NVM(741-xxx:Drum YMC Motor Speed Fine Adjustment 121/175 speed 1) and NVM(741-xxx:Drum K Motor Speed Fine Adjust-ment 121/175 speed 1) and IBT MOT P/S is 121/ 175[mm/s]. BCR AC/DC: Vcln output Outputs simultaneously DRUM/Dev MOT YMCK/ IBT MOT/ERASE LAMP YMCK/Agitator Mot/BCR AC YMCK. After NVM(CRU CHG Time)[s], stops the output of them simultaneously. Outputs BCR DC YMCK 50ms after the start of the output of Agitator Mot. Stops the output of BCR DC YMCK 50ms before Agitator Mot stops.	-	X	091-001~091-044
092-001	ADC Specular	ADC Specular LED ON/ OFF operation.	-	X	-
092-002	ADC Diffuse	ADC Diffuse LED ON/ OFF operation.	-	X	-
092-003	ADC Shutter Open	The operation of opening ADC Shutter.	O(100 ms)	X	-
092-004	ADC Shutter Close	The operation of closing ADC Shutter.	O(100 ms)	X	-
093-001	DISPENSE MOTOR-Y (79mm/ s)	Output of Dispense Motor-Y at 79mm/s	-	X	093-002, 093-003, 093-004, 093-005
093-002	DISPENSE MOTOR-Y (121mm/s)	Output of Dispense Motor-Y at 121mm/s	-	X	093-001, 093-003, 093-004, 093-005
093-003	DISPENSE MOTOR-Y (175mm/s)	Output of Dispense Motor-Y at 175mm/s	-	X	093-001, 093-002, 093-004, 093-005

Table 2 IOT Output Codes

Chain-Link	Component Name	Operational Description	Time Out	Cyclic ?	Conflicts
093-004	DISPENSE MOTOR-Y (200mm/s)	Output of Dispense Motor-Y at 200mm/s	-	X	093-001, 093-002, 093-003, 093-005
093-005	DISPENSE MOTOR-Y (225mm/s)	Output of Dispense Motor-Y at 225mm/s	-	X	093-001, 093-002, 093-003, 093-004
093-006	DISPENSE MOTOR-M (79mm/s)	Output of Dispense Motor-M at 79mm/s	-	X	093-007, 093-008, 093-009, 093-010
093-007	DISPENSE MOTOR-M (121mm/s)	Output of Dispense Motor-M at 121mm/s	-	X	093-006, 093-008, 093-009, 093-010
093-008	DISPENSE MOTOR-M (175mm/s)	Output of Dispense Motor-M at 175mm/s	-	X	093-006, 093-007, 093-009, 093-010
093-009	DISPENSE MOTOR-M (200mm/s)	Output of Dispense Motor-M at 200mm/s	-	X	093-006, 093-007, 093-008, 093-010
093-010	DISPENSE MOTOR-M (225mm/s)	Output of Dispense Motor-M at 225mm/s	-	X	093-006, 093-007, 093-008, 093-009
093-011	DISPENSE MOTOR-C (79mm/s)	Output of Dispense Motor-C at 79mm/s	-	X	093-012, 093-013, 093-014, 093-015
093-012	DISPENSE MOTOR-C (121mm/s)	Output of Dispense Motor-C at 121mm/s	-	X	093-011, 093-013, 093-014, 093-015
093-013	DISPENSE MOTOR-C (175mm/s)	Output of Dispense Motor-C at 175mm/s	-	X	093-011, 093-012, 093-014, 093-015
093-014	DISPENSE MOTOR-C (200mm/s)	Output of Dispense Motor-C at 200mm/s	-	X	093-011, 093-012, 093-013, 093-015
093-015	DISPENSE MOTOR-C (225mm/s)	Output of Dispense Motor-C at 225mm/s	-	X	093-011, 093-012, 093-013, 093-014
093-016	DISPENSE MOTOR-K (79mm/s)	Output of Dispense Motor-K at 79mm/s	-	X	093-017, 093-018, 093-019, 093-020, 093-021
093-017	DISPENSE MOTOR-K (121mm/s)	Output of Dispense Motor-K at 121mm/s	-	X	093-016, 093-018, 093-019, 093-020, 093-021

Table 2 IOT Output Codes

Chain-Link	Component Name	Operational Description	Time Out	Cyclic ?	Conflicts
093-018	DISPENSE MOTOR-K (175mm/s)	Output of Dispense Motor-K at 175mm/s	-	X	093-016, 093-017, 093-019, 093-020, 093-021
093-019	DISPENSE MOTOR-K (200mm/s)	Output of Dispense Motor-K at 200mm/s	-	X	093-016, 093-017, 093-018, 093-020, 093-021
093-020	DISPENSE MOTOR-K (225mm/s)	Output of Dispense Motor-K at 225mm/s	-	X	093-016, 093-017, 093-018, 093-019, 093-021
093-021	DISPENSE MOTOR-K (255mm/s)	Output of Dispense Motor-K at 255mm/s	-	X	093-016, 093-017, 093-018, 093-019, 093-020
093-022	Dev YMCMotor(121mm/s)	Dev YMC Motor rotary drive operation: A start instruction triggers its rotary drive (121mm/s). A stop instruction stops its rotation.	-	X	093-023, 093-024, 093-025, 093-026
093-023	Dev YMCMotor(175mm/s)	Dev YMC Motor rotary drive operation: A start instruction triggers its rotary drive (175mm/s). A stop instruction stops its rotation.	-	X	093-022, 093-024, 093-025, 093-026
093-024	Dev YMC Motor(200mm/s)	Dev YMC Motor solo rotation operation: A start instruction triggers its rotary drive (200mm/s). A stop instruction stops its rotation.	-	X	093-022, 093-023, 093-025, 093-026
093-025	Dev YMC Motor(225mm/s)	Dev YMC Motor solo rotation operation: A start instruction triggers its rotary drive (225mm/s). A stop instruction stops its rotation.	-	X	093-022, 093-023, 093-024, 093-026
093-026	Dev YMC Motor(255mm/s)	Dev YMC Motor solo rotation operation: A start instruction triggers its rotary drive (255mm/s). A stop instruction stops its rotation.	-	X	093-022, 093-023, 093-024, 093-025

Table 2 IOT Output Codes

Chain-Link	Component Name	Operational Description	Time Out	Cyclic ?	Conflicts
093-027	Dev BIAS-DC-MINUS-Y	Output of Dev BIAS-DC-MINUS-Y Output Value: [NVM]BIAS_DC_OUT[Y](752-xxx)	-	X	-
093-028	Dev BIAS-DC-MINUS-M	Output of Dev BIAS-DC-MINUS-M Output Value: [NVM]BIAS_DC_OUT[M](752-xxx)	-	X	-
093-029	Dev BIAS-DC-MINUS-C	Output of Dev BIAS-DC-MINUS-C Output Value: [NVM]BIAS_DC_OUT[C](752-xxx)	-	X	-
093-030	Dev BIAS-DC-MINUS-K	Output of Dev BIAS-DC-MINUS-K Output Value: [NVM]BIAS_DC_OUT[K](752-xxx)	-	X	-
093-031	Dev BIAS-AC-YMC	Output of Dev BIAS-AC-YMC Output Value: [NVM]#YMC_Dev AC 121 Duty value (752-xxx) Outputs Dev Bias AC Clock simultaneously.	-	X	-
093-032	Dev BIAS-AC-K	Output of Dev BIAS-AC-K Output Value: [NVM]#K_Dev AC 121 Duty value (752-xxx) Outputs Dev Bias AC Clock simultaneously.	-	X	-
094-001	2nd BTR(-)	Output of 2nd BTR (-) Bias Output Value: NVM (2nd BTR Transfer Bias Output Fixed Value).	-	X	094-002
094-002	2nd BTR(+)	Output of 2nd BTR(+) Bias	-	X	094-001

Table 2 IOT Output Codes

Chain-Link	Component Name	Operational Description	Time Out	Cyclic ?	Conflicts
094-003	2nd BTR Contact	2nd BTR Contact operation Detection of the Contact position by 2nd BTR Retract Sensor makes the 2nd BTR Contact operation stop automatically.	-	X	094-004
094-004	2nd BTR Retract	2nd BTR Retract operation Detection of the Retract position by 2nd BTR Retract Sensor makes the 2nd BTR Retract operation stop automatically.	-	X	094-003
094-005	IBT MOT ON(79mm/s)	IBT Motor rotation operation at Process Speed 79 Sets 79 speed depending on the I/O combination. (Clock reflects NVM(741-001:IBT Motor Speed Fine Adjustment 79 speed).)		X	094-006, 094-007, 094-008, 094-009, 094-010, 094-011
094-006	IBT MOT ON(121mm/s)	IBT Motor rotation operation at Process Speed 121 Sets 121 speed depending on the I/O combination. (Clock reflects NVM(741-002:IBT Motor Speed Fine Adjustment 121 speed).)		X	094-005, 094-007, 094-008, 094-009, 094-010, 094-011
094-007	IBT MOT ON(175mm/s)	IBT Motor rotation operation at Process Speed 175 Sets 175 speed depending on the I/O combination. (Clock reflects NVM(741-003:IBT Motor Speed Fine Adjustment 175 speed).)		X	094-005, 094-006, 094-008, 094-009, 094-010, 094-011

Table 2 IOT Output Codes

Chain-Link	Component Name	Operational Description	Time Out	Cyclic ?	Conflicts
094-008	IBT MOT ON(200mm/s)	IBT Motor rotation operation at Process Speed 200 Sets 200 speed depending on the I/O combination. (Clock reflects NVM(741-004:IBT Motor Speed Fine Adjustment 200 speed).)		X	094-005, 094-006, 094-007, 094-009, 094-010, 094-011
094-009	IBT MOT ON(225mm/s)	IBT Motor rotation operation at Process Speed 225 Sets 225 speed depending on the I/O combination. (Clock reflects NVM(741-005:IBT Motor Speed Fine Adjustment 225 speed).)		X	094-005, 094-006, 094-007, 094-008, 094-010, 094-011
094-010	IBT MOT ON(255mm/s)	IBT Motor rotation operation at Process Speed 255 Sets 255 speed depending on the I/O combination. (Clock reflects NVM(741-006:IBT Motor Speed Fine Adjustment 255 speed).)		X	094-005, 094-006, 094-007, 094-008, 094-009, 094-011
094-011	IBT MOT REVERSE ON	IBT Motor rotation operation at Process Speed 79 Sets reverse rotation depending on the I/O combination. Stops the motor automatically after an elapse of NVM(746-291:IBT MOT Reverse Time). (Clock reflects NVM(741-002:IBT Motor Speed Fine Adjustment Reverse).) *Round off a value in ms to a value in 10ms.		X	094-005, 094-006, 094-007, 094-008, 094-009, 094-010

Table 2 IOT Output Codes

Chain-Link	Component Name	Operational Description	Time Out	Cyclic ?	Conflicts
094-012	1st BTR Contact	Turns ON Fuser Motor 121mm/s for the 1st BTR Contact operation. Detection of the Contact position by 1st BTR Retract Sensor makes the 1st BTR Contact operation and the Fuser Motor operation stop automatically.		X	094-013, 010-001, 010-002, 010-003, 010-004, 010-005, 010-006, 010-007, 010-008
094-013	1st BTR Retract	Turns On Fuser Motor 121mm/s for the 1st BTR Retract operation. Detection of the Retract position by 1st BTR Retract Sensor makes the 1st BTR Retract operation and the Fuser Motor operation stop automatically.		X	094-012, 010-001, 010-002, 010-003, 010-004, 010-005, 010-006, 010-007, 010-008

Table 3 HCF Input Codes

Chain-Link	Component Name	Display	Description
078-100	HCF Pre Feed Sensor	H/L	Detects the 2000HCF Pre Feed Sensor ON/OFF. High when paper is detected.
078-101	HCF Feed Out Sensor	H/L	Detects the 2000HCF Feed Out Sensor ON/OFF. High when paper is detected.
078-200	HCF No Paper Sensor	H/L	Detects the 2000HCF No Paper Sensor ON/OFF. High when no paper is detected.
078-201	HCF Level Sensor	H/L	Detects the 2000HCF Level Sensor ON/OFF. High during Lift Up.
078-202	HCF Size Sensor (Letter)	H/L	Detects the 2000HCF Size Sensor (Letter) ON/OFF. (Determines the paper size in combination with the 2000HCF Size Sensor (A4).)

Table 3 HCF Input Codes

Chain-Link	Component Name	Display	Description
078-203	HCF Size Sensor (A4)	H/L	Detects the 2000HCF Size Sensor (A4) ON/OFF. (Determines the paper size in combination with the 2000HCF Size Sensor (Letter).)
078-204	HCF Tray In Sensor	H/L	Detects the 2000HCF Tray In Sensor ON/OFF. High when the Tray is inserted.
078-300	HCF Transport Interlock	H/L	Detects 2000HCF Transport Interlock Open/Close. High when Open is detected.
078-301	HCF Home Position Switch	H/L	Detects 2000HCF Home Position Switch Open/Close. High when Open is detected.

Table 4 HCF Output Codes

Chain-Link	Component Name	Description	T-On	Cyclic Operation	Multiple Output Prohibited Items
078-003	HCF Feed Motor:Feed	Drives the Motor in the Feed direction at a frequency of 2320PPS (307.5mm/s).	-	X	-
078-004	HCF Feed Motor:Lift Up	Drives the Motor in the Lift Up direction at a frequency of 3395PPS (450mm/s). Drives it only when HCF Tray Level Sensor is Off. Does not drive it when the sensor is On. Stops driving it if the sensor turns On while it is driving. Does not drive it when HCF Tray In Sensor is Off.	-	X	-
078-096	HCFHCF T/A Motor (400mm/s)	Drives HCF T/A Roll at a speed of 400mm/s.	-	X	-

Table 5 Integrated Office Finisher Input Codes

Chain-Link	Name	Connector Level	Meaning	Remarks
012-110	Regi Clutch ON	Low	IOT Regi Clutch status	Clutch ON
012-111	IOT Exit SNR	High	IOT Exit SNR status (Hot Line)	Paper exists.

Table 5 Integrated Office Finisher Input Codes

Chain-Link	Name	Connector Level	Meaning	Remarks
012-140	Ent SNR	High	Paper Detection by Ent SNR	Paper exists.
012-150	Compile Exit SNR	High	Paper Detection by Compiler Exit SNR	Paper exists.
012-220	Front Tamper Home SNR	High	Detection of Front Tamper Position	Not Home (receiving light)
012-221	Rear Tamper Home SNR	High	Detection of Rear Tamper Position	Not Home (receiving light)
012-242	Low Staple SNR	High	Detection of staples in Stapler and of Staple Cartridge	No staples
012-243	Self Priming SNR	High	Detection of the status where Stapler Staple is ready	Not Ready
012-244	Staple Home SNR	High	Detection of Staple Head Position	Not Home
012-251	Set Clamp Home SNR	High	Detection of Set Clamp Position	Not Home (receiving light)
012-252	Eject Home SNR	High	Detection of Eject Belt Position	Not Home (receiving light)
012-267	Stack Height Sensor	Low	Detection of paper on Stacker Tray	Detects Stacker height.
012-278	Stack Sensor1	High	Detection of Stacker Tray Position	Shield exists.
012-279	Stack Sensor2	High	Detection of Stacker Tray Position	Shield exists.
012-300	Top Cover Interlock	High	Detection of Open/Closed Top Cover	Open
012-302	Finisher Front Door SW	High	Detection of Open/Closed Front Door	Open

Table 6 Integrated Office Finisher Output Codes

Chain-Link	Name	Connector	Meaning	Time Off	Multiple Output Prohibited Items
012-013	Sub Paddle Solenoid ON/OFF	L: ON H: OFF	Sub Paddle rotation	660ms	012-014

Table 6 Integrated Office Finisher Output Codes

Chain-Link	Name	Connector	Meaning	Time Off	Multiple Output Prohibited Items
012-014	Sub Paddle Rotation	equal to 012-13 and 012-95	Sub Paddle makes one rotation. (Rotates Transport Motor FORWARD at the same time as Sub Paddle Solenoid turns ON.)	Mot: 3162 Pulse Sol: 660ms	012-013 012-095 012-096 012-097
012-017	Set Clamp Motor ON/OFF	Pulse: ON H: OFF	Set Clamp Motor rotates forward.	250 pulses	012-061
012-020	Front Tamper Mot Low FRONT ON/OFF	Pulse: ON H: OFF	Front Tamper moves to Front at low speed.	100 pulses	012-021 012-022 012-023 012-024 012-025
012-021	Front Tamper Mot Middle FRONT ON/OFF	Pulse: ON H: OFF	Front Tamper moves to Front at medium speed.	100 pulses	012-020 012-022 012-023 012-024 012-025
012-022	Front Tamper Mot High FRONT ON/OFF	Pulse: ON H: OFF	Front Tamper moves to Front at high speed.	100 pulses	012-020 012-021 012-023 012-024 012-025
012-023	Front Tamper Mot Low REAR ON/OFF	Pulse: ON H: OFF	Front Tamper moves to Rear at low speed.	100 pulses	012-020 012-021 012-022 012-024 012-025
012-024	Front Tamper Mot Middle REAR ON/OFF	Pulse: ON H: OFF	Front Tamper moves to Rear at medium speed.	100 pulses	012-020 012-021 012-022 012-023 012-025
012-025	Front Tamper Mot High REAR ON/OFF	Pulse: ON H: OFF	Front Tamper moves to Rear at high speed.	100 pulses	012-020 012-021 012-022 012-023 012-024
012-026	Rear Tamper Mot Low FRONT ON/OFF	Pulse: ON H: OFF	Rear Tamper moves to Front at low speed.	100 pulses	012-027 012-028 012-029 012-030 012-031

Table 6 Integrated Office Finisher Output Codes

Chain-Link	Name	Connector	Meaning	Time Off	Multiple Output Prohibited Items
012-027	Rear Tamper Mot Middle FRONT ON/OFF	Pulse: ON H: OFF	Rear Tamper moves to Front at medium speed.	100 pulses	012-026 012-028 012-029 012-030 012-031
012-028	Rear Tamper Mot High FRONT ON/OFF	Pulse: ON H: OFF	Rear Tamper moves to Front at high speed.	100 pulses	012-026 012-027 012-029 012-030 012-031
012-029	Rear Tamper Mot Low REAR ON/OFF	Pulse: ON H: OFF	Rear Tamper moves to Rear at low speed.	100 pulses	012-026 012-027 012-028 012-030 012-031
012-030	Rear Tamper Mot Middle REAR ON/OFF	Pulse: ON H: OFF	Rear Tamper moves to Rear at medium speed.	100 pulses	012-026 012-027 012-028 012-029 012-031
012-031	Rear Tamper Mot High REAR ON/OFF	Pulse: ON H: OFF	Rear Tamper moves to Rear at high speed.	100 pulses	012-026 012-027 012-028 012-029 012-030
012-046	Staple Motor FORWARD ON/OFF	H: ON L: OFF	Staple MOT rotates forward.	Staple Home OFF then ON makes the motor stop. (a little longer when a failure occurs)	012-047
012-047	Staple Motor REVERSE ON/OFF	H: ON L: OFF	Staple MOT reverses.	180ms	012-046

Table 6 Integrated Office Finisher Output Codes

Chain-Link	Name	Connector	Meaning	Time Off	Multiple Output Prohibited Items
012-054	Eject Motor Low FORWARD ON/ OFF	Pulse: ON H: OFF	Eject MOT rotates forward at low speed.	2000 pulses	012-055 012-056 012-057
012-055	Eject Motor High FORWARD ON/ OFF	Pulse: ON H: OFF	Eject MOT rotates forward at high speed.	2000 pulses	012-054 012-056 012-057
012-056	Eject Motor Low REVERSE ON/ OFF	Pulse: ON H: OFF	Eject MOT reverses at low speed.	2000 pulses	012-054 012-055 012-057
012-057	Eject Motor High REVERSE ON/ OFF	Pulse: ON H: OFF	Eject MOT reverses at high speed.	2000 pulses	012-054 012-055 012-056
012-060	Stacker Motor UP ON/OFF	H: ON L: OFF	Stacker Tray goes up.	80ms	012-061
012-061	Stacker Motor DOWN ON/OFF	H: ON L: OFF	Stacker Tray goes down.	80ms	012-060
012-095	Transport Motor Low ON/OFF	Pulse: ON H: OFF	Transport Mot rotates forward at low speed (equal to full IOT speed).	-	012-014 012-096 012-097
012-096	Transport Motor Hi ON/OFF	Pulse: ON H: OFF	Transport Mot rotates forward at high speed (transport speed in Finisher).	-	012-014 012-095 012-097
012-097	Transport Motor Half Speed ON/ OFF	Pulse: ON H: OFF	Transport Mot rotates forward at half speed (equal to half IOT speed).	-	012-014 012-095 012-096

Table 7 Office Finisher (LX) Input Codes

Chain Link	Name	Description	Level
012-100	Finisher Entrance Sensor	Detects paper at Finisher Entrance Sensor	H: No paper detected L: Paper detected
012-110	Regi Clutch ON	Status of IOT Regi Clutch (Hot Line)	H: IOT Regi Clutch ON L: IOT Regi Clutch OFF
012-111	IOT Exit Sensor	Status of IOT Exit Sensor (Hot Line)	H: Paper detected L: No paper detected

Table 7 Office Finisher (LX) Input Codes

Chain Link	Name	Description	Level
012-150	Compile Exit Sensor	Detects paper at Compile Exit Sensor	H: No paper detected L: Paper detected
012-151	Compiler Tray No Paper Sensor	Detects paper at Compiler Tray No Paper Sensor	H: No paper detected L: Paper detected
012-190	H-Transport Entrance Sensor	Detects paper at H-Transport Entrance Sensor	H: No paper detected L: Paper detected
012-220	Front Tamper Home Sensor	Detects the position of Front Tamper	H: Home L: Not at Home
012-221	Rear Tamper Home Sensor	Detects the position of Rear Tamper	H: Home L: Not at Home
012-241	Stapler Move Position Sensor	Detects the position of Stapler Unit	H: Detected L: Not detected
012-242	Low Staple Sensor	Detects the availability of Stapler and Staple Cartridge	H: Stapler not available (Low Staple) L: Stapler available
012-243	Self Ready Sensor	Detects the Ready status of Stapler	H: Not Ready L: Ready
012-244	Staple Head Home Sensor	Detects the position of Staple Head	H: Not at Home L: Home
012-250	Eject Clamp Home Sensor	Detects the home position of the Eject Clamp	H: Not at Home L: Home
012-251	Set Clamp Home Sensor	Detects the home position of the Set Clamp	H: Not at Home (Blocked) L: Home (Exposed)
012-262	Stacker No Paper Sensor	Detects the presence of paper in Stacker Tray	H: Highest position detected (No Paper detected) L: Not at highest position
012-263	Stack Encoder Sensor	Detects the encoder pulse of the Stacker	H: Blocked L: Exposed
012-264	Stacker Height Sensor 1	Detects the position of Stacker Tray	H: Detected (Blocked) L: Not detected (Exposed)

Table 7 Office Finisher (LX) Input Codes

Chain Link	Name	Description	Level
012-265	Stacker Height Sensor 2	Detects the position of Stacker Tray	H: Detected (Blocked) L: Not detected (Exposed)
012-271	Punch Home Sensor	Detects the home position of the Puncher	H: Not at Home (Blocked) L: Home (Exposed)
012-274	Punch Encoder Sensor	Detects the encoder pulse of the Puncher	H: Blocked L: Exposed
012-275	Punch Box Set Sensor	Detects whether the Punch Box is set	H: Punch Box is set L: Punch Box is not set
012-277	Puncher Detect	Detects the connection of Puncher Unit by shorting wire	H: Not detected (Puncher Unit not connected) L: Detected (Puncher Unit connected)
012-300	Eject Cover Switch	Detects the opening/closing of Eject Cover	24V: CLOSE 0V: OPEN
012-302	Finisher Front Door Switch	Detects the opening/closing of Front Door	H: Front Door OPEN L: Front Door CLOSE
012-303	H-Transport Open Sensor	Detects the open status of covers at H-Transport Unit	H: Cover OPEN L: Cover CLOSE
013-101	Folder Home Sensor	Detects the home position of the Folder Knife	H: Not at Home L: Home
013-107	Booklet Front Low Staple Switch	Detects Low Staple status at the front of Booklet Stapler and loading status of the cartridge	H: Stapler available L: Stapler not available
013-108	Booklet Rear Low Staple Switch	Detects Low Staple status at the rear of Booklet Stapler and loading status of the cartridge	H: Stapler available L: Stapler not available

Table 7 Office Finisher (LX) Input Codes

Chain Link	Name	Description	Level
013-141	Booklet Front Stapler Home Switch	Detects the position of Booklet Front Stapler Head	H: Not at Home L: Home
013-142	Booklet Rear Stapler Home Switch	Detects the position of Booklet Rear Stapler Head	H: Not at Home L: Home
013-143	Booklet Stapler Move Home Sensor	Detects the home position of Booklet Stapler Unit	H: Home L: Not at Home
013-144	Booklet Stapler Move Position Home Sensor	Detects the staple position of Booklet Stapler Unit	H: Detected L: Not detected
013-160	Folder Detect	Detects the connection of Folder Unit	H: Not detected (Folder Unit not connected) L: Detected (Folder Unit connected)
013-161	Booklet Detect	Detects the connection of Booklet Unit	H: Not detected (Booklet Unit not connected) L: Detected (Booklet Unit connected)
013-300	Booklet Stapler Cover Switch	Detects the opening/closing of Booklet Cover	H: Booklet Cover OPEN L: Booklet Cover CLOSE
013-301	Booklet Stapler Front Safety Switch Booklet Stapler Rear Safety Switch	Detects obstructions at the lower part of Booklet Unit	24V: Normal (contact close) 0: Malfunction (When obstruction is detected: contact open)

Table 8 Office Finisher (LX) Output Codes

Chain Link	Name	Description	Timer Off	Cyclic Motion	Multiple Output Prohibited Items	Connector Level
012-013	Sub Paddle Solenoid ON/OFF	Turns the Sub Paddle Solenoid ON/OFF	SB-Fin: 250ms	X	-	L: ON H: OFF
012-018	Transport Motor Reverse ON/OFF	Transport Motor reverse rotation	-	X	12-36 12-37 12-38	Pulse (24V): ON Low: OFF

Table 8 Office Finisher (LX) Output Codes

Chain Link	Name	Description	Timer Off	Cyclic Motion	Multiple Output Prohibited Items	Connector Level
012-020	Front Tamper Motor Low Speed to FRONT ON/ OFF	Front Tamper Front shift - Low Speed	82 pulse	X	12-22 12-23 12-25	Pulse (24VDC): ON L: OFF
012-022	Front Tamper Motor High Speed to FRONT ON/ OFF	Front Tamper Front shift - High Speed	82 pulse	X	12-20 12-23 12-25	Pulse (24VDC): ON L: OFF
012-023	Front Tamper Motor Low Speed to REAR ON/OFF	Front Tamper Rear shift - Low Speed	82 pulse	X	12-20 12-22 12-25	Pulse (24VDC): ON L: OFF
012-025	Front Tamper Motor High Speed to REAR ON/OFF	Front Tamper Rear shift - High Speed	82 pulse	X	12-20 12-22 12-23	Pulse (24VDC): ON L: OFF
012-026	Rear Tamper Motor Low Speed to FRONT ON/ OFF	Rear Tamper Front shift - Low Speed	82 pulse	X	12-28 12-29 12-31	Pulse (24VDC): ON L: OFF
012-028	Rear Tamper Motor High Speed to FRONT ON/ OFF	Rear Tamper Front shift - High Speed	82 pulse	X	12-26 12-29 12-31	Pulse (24VDC): ON L: OFF
012-029	Rear Tamper Motor Low Speed to REAR ON/OFF	Rear Tamper Rear shift - Low Speed	82 pulse	X	12-26 12-28 12-31	Pulse (24VDC): ON L: OFF
012-031	Rear Tamper Motor High Speed to REAR ON/OFF	Rear Tamper Rear shift - High Speed	82 pulse	X	12-26 12-28 12-29	Pulse (24VDC): ON L: OFF
012-032	H-Transport Motor ON/OFF 1	Xport Motor forward rotation - Speed 1 (Max. Speed)	-	X	12-33 12-34 12-35 12-39	Pulse (24V): ON Low: OFF

Table 8 Office Finisher (LX) Output Codes

Chain Link	Name	Description	Timer Off	Cyclic Motion	Multiple Output Prohibited Items	Connector Level
012-033	H-Transport Motor ON/OFF 2	Xport Motor forward rotation - Speed 2 (High Speed)	-	X	12-32 12-34 12-35 12-39	Pulse (24V): ON Low: OFF
012-034	H-Transport Motor ON/OFF 3	Xport Motor forward rotation - Speed 3 (Medium-High Speed)	-	X	12-32 12-33 12-35 12-39	Pulse (24V): ON Low: OFF
012-035	H-Transport Motor ON/OFF 4	Xport Motor forward rotation - Speed 4 (Medium Speed)	-	X	12-32 12-33 12-34 12-39	Pulse (24V): ON Low: OFF
012-036	Transport Motor ON/OFF 1	Transport Motor forward rotation - Speed 1 (High Speed)	-	X	12-37 12-38 12-18	Pulse (24V): ON Low: OFF
012-037	Transport Motor ON/OFF 2	Transport Motor forward rotation - Speed 2 (Medium Speed)	-	X	12-36 12-38 12-18	Pulse (24V): ON Low: OFF
012-038	Transport Motor ON/OFF 3	Transport Motor forward rotation - Speed 3 (Low Speed)	-	X	12-36 12-37 12-18	Pulse (24V): ON Low: OFF
012-039	H-Transport Motor Reverse ON/OFF	Xport Motor reverse rotation	-	X	12-32 12-33 12-34 12-35	Pulse (24V): ON Low: OFF
012-040	Stapler Move Motor Low Speed to FRONT ON/ OFF	Stapler Move Front shift - Low Speed	400 pulse	X	12-42 12-43 12-45	Pulse (24VDC): ON L: OFF
012-042	Stapler Move Motor High Speed to FRONT ON/ OFF	Stapler Move Front shift - High Speed	400 pulse	X	12-40 12-43 12-45	Pulse (24VDC): ON L: OFF
012-043	Stapler Move Motor Low Speed to REAR ON/OFF	Stapler Move Rear shift - Low Speed	400 pulse	X	12-40 12-42 12-45	Pulse (24VDC): ON L: OFF

Table 8 Office Finisher (LX) Output Codes

Chain Link	Name	Description	Timer Off	Cyclic Motion	Multiple Output Prohibited Items	Connector Level
012-045	Stapler Move Motor High Speed to REAR ON/OFF	Stapler Move Rear shift - High Speed	400 pulse	X	12-40 12-42 12-43	Pulse (24VDC): ON L: OFF
012-046	Staple Motor FORWARD ON/OFF	Staple Motor forward rotation This will take longer when a fail has occurred	Stops when the Staple Head Home Sensor turns ON	X	12-47	H: ON L: OFF
012-047	Staple Motor REVERSE ON/OFF	Staple Motor reverse rotation	Specified time	X	12-46	H: ON L: OFF
012-050	Set Clamp Clutch ON/OFF	Set Clamp Paddle rotation	200ms	X	-	L: ON H: OFF
012-052	Eject Clamp UP	Eject Clamp Roll Up operation Eject Motor reverse rotation - High Speed	Stops when home position is detected by Eject Clamp Home Sensor	Approx. 15ms 320ms when failure occurs	12-53 12-54 12-55	Pulse (24V): ON Low: OFF
012-053	Eject Clamp DOWN	Eject Clamp Roll Down operation Eject Motor reverse rotation - High Speed	Stops when home position is detected by Eject Clamp Home Sensor	Approx. 15ms 320ms when failure occurs	12-52 12-54 12-55	Pulse (24V): ON Low: OFF

Table 8 Office Finisher (LX) Output Codes

Chain Link	Name	Description	Timer Off	Cyclic Motion	Multiple Output Prohibited Items	Connector Level
012-054	Eject Motor Low Speed to FORWARD ON/OFF	Eject Motor forward rotation - Low Speed	1136 pulse		12-52 12-53 12-55	Pulse: ON H: OFF
012-055	Eject Motor High Speed to FORWARD ON/OFF	Eject Motor forward rotation - High Speed	1136 pulse		12-52 12-53 12-54	Pulse: ON H: OFF
012-060	Stacker Elevator Motor UP ON/OFF	Stacker Tray upward movement Does not operate when the Stacker Tray No Paper Sensor is ON	500ms		12-61	H: ON L: OFF
012-061	Stacker Elevator Motor DOWN ON/OFF	Stacker Tray downward movement Does not operate when paper Full is detected	500ms	If Full position was detected before or during the operation, output will be prohibited	12-60	H: ON L: OFF
012-074	Punch Motor Home Move	Punch Motor Home operation This will take longer when a fail has occurred	Stops when Home operation is completed	X	12-77 12-78 12-79	Pulse (24V): ON Low: OFF

Table 8 Office Finisher (LX) Output Codes

Chain Link	Name	Description	Timer Off	Cyclic Motion	Multiple Output Prohibited Items	Connector Level
012-077	Punch (2Hole)	2-hole Punch operation This will take longer when a fail has occurred	Stops when Home Snr OFF->ON is detected	X	12-74 12-78 12-79	H: ON L: OFF
012-078	Punch (3Hole)	3-hole Punch operation (For machines without 3-hole punch, this will be anything other than 2-hole operation or it will be empty rotation) This will take longer when a fail has occurred	Stops when Home Snr OFF->ON is detected	X	12-74 12-77 12-79	H: ON L: OFF
012-079	Punch (4Hole)	4-hole Punch operation (For machines without 4-hole punch, this will be anything other than 2-hole operation or it will be empty rotation) This will take longer when a fail has occurred	Stops when Home Snr OFF->ON is detected	X	12-74 12-77 12-78	H: ON L: OFF
013-022	Folder Knife Motor FORWARD ON/OFF	Folder Knife Motor forward rotation	-	-	13-23	Pulse (24V): ON Low: OFF
013-023	Folder Knife Motor REVERSE ON/OFF	Folder Knife Motor reverse rotation	-	-	13-22	Pulse (24V): ON Low: OFF

Table 8 Office Finisher (LX) Output Codes

Chain Link	Name	Description	Timer Off	Cyclic Motion	Multiple Output Prohibited Items	Connector Level
013-024	Booklet Front Stapler Motor FORWARD ON/OFF	Booklet Front Stapler Motor forward rotation This will take longer when a fail has occurred	Stops when the home position is detected by Booklet Front Stapler Home Switch	-	13-25	Pulse (24V): ON Low: OFF
013-025	Booklet Front Stapler Motor REVERSE ON/OFF	Booklet Front Stapler Motor reverse rotation	Specified time	-	13-24	Pulse (24V): ON Low: OFF
013-026	Booklet Rear Stapler Motor FORWARD ON/OFF	Booklet Rear Stapler Motor forward rotation This will take longer when a fail has occurred	Stops when the home position is detected by Booklet Rear Stapler Home Switch	-	13-27	Pulse (24V): ON Low: OFF
013-027	Booklet Rear Stapler Motor REVERSE ON/OFF	Booklet Rear Stapler Motor reverse rotation	Specified time	-	13-26	Pulse (24V): ON Low: OFF
013-028	Booklet Stapler Move Motor to INSIDE	Drives the Booklet Stapler Move Motor and moves the Booklet Stapler inside	350 pulse	-	13-29	Pulse (24V): ON Low: OFF
013-029	Booklet Stapler Move Motor to OUTSIDE	Drives the Booklet Stapler Move Motor and moves the Booklet Stapler outside	350 pulse	-	13-28	Pulse (24V): ON Low: OFF

Table 9 Professional Finisher Input Codes

Chain-Link	Component Name	Description	Port Level	Connector Level
12-100	Xport Ent. SNR	0: without paper 1: with paper	H: No paper detected, L: Paper detected	H: Paper detected, L: No paper detected
12-101	Buffer Path SNR	0: without paper 1: with paper	H: No paper detected, L: Paper detected	H: Paper detected, L: No paper detected
12-102	Gate Snr	0: with paper 1: without paper	H: Paper detected, L: No paper detected	H: No paper detected, L: Paper detected
12-111	IOT Exit SNR	0: without paper 1: with paper	H: No paper detected, L: Paper detected	H: Paper detected, L: No paper detected
12-115	Top Tray Exit SNR	0: without paper 1: with paper	H: No paper detected, L: Paper detected	H: Paper detected, L: No paper detected
12-150	Compile Exit SNR	0: without paper 1: with paper	H: No paper detected, L: Paper detected	H: Paper detected, L: No paper detected
12-151	Compiler Tray No Paper SNR	0: without paper 1: with paper	H: No paper detected, L: Paper detected	H: Paper detected, L: No paper detected
12-190	H-Xport Ent. SNR	0: without paper 1: with paper	H: No paper detected, L: Paper detected	H: Paper detected, L: No paper detected
12-191	H-Xport Exit SNR	0: without paper 1: with paper	H: No paper detected, L: Paper detected	H: Paper detected, L: No paper detected
12-200	Side Regi SNR 1	0: without paper 1: with paper	H: No paper detected, L: Paper detected	H: Paper detected, L: No paper detected
12-201	Side Regi SNR 2	0: without paper 1: with paper	H: No paper detected, L: Paper detected	H: Paper detected, L: No paper detected
12-215	Top Tray Full SNR	0: without paper 1: with paper	H: Not Full L: Full	H: Full L: Not Full
12-220	Front Tamper Home SNR	0: home position 1: other than home position	H: Not at Home L: Home	H: Home L: Not at Home
12-221	Rear Tamper Home SNR	0: home position 1: other than home position	H: Not at Home L: Home	H: Home L: Not at Home
12-241	Stapler Move Position SNR	0: home position 1: other than home position	H: Not at Sensor Position L: Sensor Position	H: Sensor Position L: Not at Sensor Position

Table 9 Professional Finisher Input Codes

Chain-Link	Component Name	Description	Port Level	Connector Level
12-242	Low Staple SNR	0: with pin 1: without pin	H: Staples detected L: No staples detected	H: No staples detected L: Staples detected
12-243	Self Priming SNR	0: Ready 1: Not Ready	H: Ready L: Not Ready	H: Not Ready L: Ready
12-244	Staple Home SNR	0: home position 1: other than home position	H: Home L: Not at Home	H: Not at Home L: Home
12-250	Eject Clamp Home SNR	0: home position 1: other than home position	H: Home L: Not at Home	H: Not at Home L: Home
12-251	Set Clamp Home SNR	0: home position 1: other than home position	H: Home L: Not at Home	H: Not at Home L: Home
12-260	Upper Limit SNR	0: other than upper limit position 1: upper limit position	H: Not Limit L: Limit	H: Limit L: Not Limit
12-262	Stacker No Paper SNR	0: with finisher 1: without finisher	H: Paper detected L: No paper detected	H: No paper detected L: Paper detected
12-263	Stack Encoder SNR	1: When the encoder pulse pass the slit.	H: Not detected L: Detected	H: Detected L: Not detected
12-264	Stacker Height SNR 1	0: without paper 1: with paper	H: Sensor not detecting L: Sensor detecting	H: Sensor detecting L: Sensor not detecting
12-265	Stacker Height SNR 2	0: without paper 1: with paper	H: Sensor not detecting L: Sensor detecting	H: Sensor detecting L: Sensor not detecting
12-270	Puncher Move Home SNR	0: home position 1: other than home position	H: Home L: Not at Home	H: Not at Home L: Home
12-271	Puncher Home SNR	0: home position 1: other than home position	H: Not at Home L: Home	H: Home L: Not at Home
12-272	Puncher Front SNR	0: home position 1: other than home position	H: Not at Home L: Home	H: Home L: Not at Home
12-273	Punch Hole Select SNR	T.B.D	H: Not at Home L: Home	H: Home L: Not at Home

Table 9 Professional Finisher Input Codes

Chain-Link	Component Name	Description	Port Level	Connector Level
12-274	Puncher Motor SNR	T.B.D	H: Exposed L: Blocked	H: Blocked L: Exposed
12-275	Punch Box Set SNR	0: with dust box 1: without dust box	H: Box disengaged L: Box set	H: Box set L: Box disengaged
12-276	Punch Full SNR		H: Not Full L: Full	H: Full L: Not Full
12-282	Decurler Home SNR	Detects the Home Position of the Decurler.	H: Home L: Not at Home	H: Not at Home L: Home
12-300	Eject Cover SW	0: Eject Cover is open 1: Eject Cover is closed	H: OPEN L: CLOSE	H: OPEN L: CLOSE
12-302	Finisher Front Door SW	0: Finisher Front Door is open 1: Finisher Front Door is closed	H: CLOSE L: OPEN	H: OPEN L: CLOSE
12-303	H-Xport Interlock SNR	0: H-Xport is open 1: H-Xport is closed	H: CLOSE L: OPEN	H: OPEN L: CLOSE
13-101	BOOKLET KNIFE HOME SNR	Detects the Home Position of Booklet Knife Home SNR.	Home	Not at Home
13-102	BOOKLET COMPILE NO PAPER SNR	Detects paper for Booklet Compiler.	Paper detected	No paper detected
13-103	BOOKLET FOLDER ROLL EXIT SNR	Detects paper for Booklet Folder Roll Exit SNR.	Paper detected	No paper detected
13-104	BOOKLET DRAWER SET SNR	Detects Booklet Drawer Open/ Close.	Drawer open	Drawer closed
13-105	BOOKLET STAPLER READY	Ready signal for Booklet Stapler.	Not Ready	Not Ready
13-106	BOOKLET STAPLER ERROR	Error signal for Booklet Stapler.	Error	Error
13-107	BOOKLET LOW STAPLE F SW	Detects Low Staple status at the front of Booklet Stapler and loading status of the cartridge.	Not Low Staple, cartridge loaded	Low Staple or cartridge not loaded

Table 9 Professional Finisher Input Codes

Chain-Link	Component Name	Description	Port Level	Connector Level
13-108	BOOKLET LOW STAPLE R SW	Detects Low Staple status at the rear of Booklet Stapler and loading status of the cartridge.	Not Low Staple, cartridge loaded	Low Staple or cartridge not loaded
13-134	BOOKLET TAMPER HOME SNR F	Detects the Home Position of Booklet Tamper Front.	Home	Not at Home
13-135	BOOKLET IN SNR	Detects paper for Booklet IN SNR.	No paper detected	Paper detected
13-136	BOOKLET TAMPER HOME SNR R	Detects the Home Position of Booklet Tamper Rear.	Home	Not at Home
13-137	BOOKLET END GUIDE HOME SNR	Detects the Home Position of the Booklet End Guide.	Home	Not at Home
13-139	BOOKLET NO PAPER SNR	Detects paper for No Paper SNR of Booklet Tray.	No paper detected	Paper detected
13-140	BOOKLET KNIFE FOLDING SNR	Detects the fold position of the Booklet Knife.	Folding Position	Not at Folding Position

Table 10 Professional Finisher Output Codes

Chain-Link	Name	The meaning of the High indication			Multiple Output Prohibited Items	Timer Off	Conditions
		Port Level	Connector Level	Meaning			
12-001	Fin Transport Motor 350 ON/OFF	Enable = H: Enabled; L: Disabled Current Ctrl = H: Current Low; L: Current High	Pulse: ON H: OFF	Rotates the Finisher Transport Motor forward - Speed 1 350mm/s	12-2, 12-5, 12-9	-	This will not operate when either the Regi Motor or the Exit Motor is operating at 600mm/s
12-002	Fin Transport Motor 600 ON/OFF	Enable = H: Enabled; L: Disabled CurrentCtrl = H: Current Low; L: Current High	Pulse: ON H: OFF	Rotates the Finisher Transport Motor forward - Speed 2 600mm/s	12-1, 12-3, 12-4, 12-6, 12-7, 12-8, 12-10	-	This will not operate when either the Regi Motor or the Exit Motor is operating at 350mm/s
12-003	Regi Motor 285F ON/OFF	Enable = H: Enabled; L: Disabled Dir = H: CW; L: CCW CurrentCtrl = H: Current Low; L: Current High	Pulse: ON H: OFF	Rotates the Regi Motor forward - 285mm/s	12-4, 12-5, 12-6, 12-2, 12-9	-	This will not operate when either the Fin Transport Motor or the Exit Motor is operating at 600mm/s

Table 10 Professional Finisher Output Codes

Chain-Link	Name	The meaning of the High indication			Multiple Output Prohibited Items	Timer Off	Conditions
		Port Level	Connector Level	Meaning			
12-004	Regi Motor 350F ON/OFF	Enable = H: Enabled; L: Disabled Dir = H: CW; L: CCW CurrentCtrl = H: Current Low; L: Current High	Pulse: ON H: OFF	Rotates the Regi Motor forward - 350mm/s	12-3, 12-5, 12-6, 12-2, 12-9	-	This will not operate when either the Fin Transport Motor or the Exit Motor is operating at 600mm/s
12-005	Regi Motor 600F ON/OFF	Enable = H: Enabled; L: Disabled Dir = H: CW; L: CCW CurrentCtrl = H: Current Low; L: Current High	Pulse: ON H: OFF	Rotates the Regi Motor forward - 600mm/s	12-3, 12-4, 12-6, 12-1, 12-7, 12-8, 12-10	-	This will not operate when either the Fin Transport Motor or the Exit Motor is operating at 350mm/s
12-006	Regi Motor 285R ON/OFF	Enable = H: Enabled; L: Disabled Dir = H: CW; L: CCW CurrentCtrl = H: Current Low; L: Current High	Pulse: ON H: OFF	Rotates the Regi Motor backward - 285mm/s	12-3, 12-4, 12-5, 12-2, 12-9	-	

Table 10 Professional Finisher Output Codes

Chain-Link	Name	The meaning of the High indication			Multiple Output Prohibited Items	Timer Off	Conditions
		Port Level	Connector Level	Meaning			
12-007	Exit Motor 285F ON/OFF	Enable = H: Enabled; L: Disabled Dir = H: CW; L: CCW CurrentCtrl = H: Current Low; L: Current High	Pulse: ON H: OFF	Rotates the Exit Motor forward - 285mm/s	12-8, 12-9, 12-10 12-2, 12-5	-	This will not operate when either the Fin Transport Motor or the Regi Motor is operating at 600mm/s
12-008	Exit Motor 350F ON/OFF	Enable = H: Enabled; L: Disabled Dir = H: CW; L: CCW CurrentCtrl = H: Current Low; L: Current High	Pulse: ON H: OFF	Rotates the Exit Motor forward - 350mm/s	12-7, 12-9, 12-10 12-2, 12-5	-	This will not operate when either the Fin Transport Motor or the Regi Motor is operating at 600mm/s

Table 10 Professional Finisher Output Codes

Chain-Link	Name	The meaning of the High indication			Multiple Output Prohibited Items	Timer Off	Conditions
		Port Level	Connector Level	Meaning			
12-009	Exit Motor 600F ON/OFF	Enable = H: Enabled; L: Disabled Dir = H: CW; L: CCW CurrentCtrl = H: Current Low; L: Current High	Pulse: ON H: OFF	Rotates the Exit Motor forward - 600mm/s	12-7, 12-8, 12-10 12-1, 12-3, 12-4, 12-6	-	This will not operate when either the Fin Transport Motor or the Regi Motor is operating at 350mm/s
12-010	Exit Motor 285R ON/OFF	Enable = H: Enabled; L: Disabled Dir = H: CW; L: CCW CurrentCtrl = H: Current Low; L: Current High	Pulse: ON H: OFF	Rotates the Exit Motor backward - 285mm/s	12-7, 12-8, 12-9, 12-2, 12-5	-	
12-011	Transport Gate Solenoid TOP	SolFIN = H: Sol OFF; L: Sol Fin ON SolTOP = H: Sol OFF; L: Sol Top ON	L: ON; H: OFF	Switches Transport Gate to Top Path	12-12	100 ms	
12-012	Transport Gate Solenoid STACKER	SolFIN = H: Sol OFF; L: Sol Fin ON SolTOP = H: Sol OFF; L: Sol Top ON	L: ON; H: OFF	Switches Transport Gate to Stacker Path	12-11	100 ms	

Table 10 Professional Finisher Output Codes

Chain-Link	Name	The meaning of the High indication			Multiple Output Prohibited Items	Timer Off	Conditions
		Port Level	Connector Level	Meaning			
12-013	Sub Paddle Solenoid ON/OFF	H: Sol OFF; L: Sol ON	L: ON; H: OFF	Turns the Sub Paddle Solenoid ON/OFF	12-14 (A-Fin only)	B/C-Fin: 100 ms A-Fin: 660 ms SB-Fin: 250 ms	
12-015	Paper to Stacker Solenoid						
12-016	Buffer Gate SOL BUF	SolSTK = H: Sol OFF; L: Sol ON SolBUF = H: Sol OFF; L: Sol ON	L: ON; H: OFF	Switches Buffer Gate to Buffer Path (Wakasa C-Fin: Solenoid ON operation)	12-15	100 ms	
12-020	Front Tamper Mot Low FRONT ON/OFF	Enable = H: Disabled; L: Enabled B/C/SB-Fin: Dir = H: Rear; L: Front A-Fin: Dir = H: Front; L: Rear	Pulse: ON H: OFF	Front Tamper Front shift - Low Speed	12-21, 12-22, 12-23, 12-24, 12-25, 13-48, 13-49, 13-50, 13-51, 13-52, 13-53, 13-54, 13-55	100 pulse SB-Fin: 82 pulse	

Table 10 Professional Finisher Output Codes

Chain-Link	Name	The meaning of the High indication			Multiple Output Prohibited Items	Timer Off	Conditions
		Port Level	Connector Level	Meaning			
12-021	Front Tamper Mot Middle FRONT ON/OFF	Enable = H: Disabled; L: Enabled B/C-Fin: Dir = H: Rear; L: Front A-Fin: Dir = H: Front; L: Rear	Pulse: ON H: OFF	Front Tamper Front shift - Medium Speed	12-20, 12-22, 12-23, 12-24, 12-25, 13-48, 13-49, 13-50, 13-51, 13-52, 13-53, 13-54, 13-55	100 pulse	
12-022	Front Tamper Mot High FRONT ON/OFF	Enable = H: Disabled; L: Enabled B/C/SB-Fin: Dir = H: Rear; L: Front A-Fin: Dir = H: Front; L: Rear	Pulse: ON H: OFF	Front Tamper Front shift - High Speed	12-20, 12-21, 12-23, 12-24, 12-25, 13-48, 13-49, 13-50, 13-51, 13-52, 13-53, 13-54, 13-55	100 pulse SB-Fin: 82 pulse	
12-023	Front Tamper Mot Low REAR ON/OFF	Enable = H: Disabled; L: Enabled B/C/SB-Fin: Dir = H: Rear; L: Front A-Fin: Dir = H: Front; L: Rear	Pulse: ON H: OFF	Front Tamper Rear shift - Low Speed	12-20, 12-21, 12-22, 12-24, 12-25, 13-48, 13-49, 13-50, 13-51, 13-52, 13-53, 13-54, 13-55	100 pulse SB-Fin: 82 pulse	

Table 10 Professional Finisher Output Codes

Chain-Link	Name	The meaning of the High indication			Multiple Output Prohibited Items	Timer Off	Conditions
		Port Level	Connector Level	Meaning			
12-024	Front Tamper Mot Middle REAR ON/OFF	Enable = H: Disabled; L: Enabled B/C-Fin: Dir = H: Rear; L: Front A-Fin: Dir = H: Front; L: Rear	Pulse: ON H: OFF	Front Tamper Rear shift - Medium Speed	12-20, 12-21, 12-22, 12-23, 12-25, 13-48, 13-49, 13-50, 13-51, 13-52, 13-53, 13-54, 13-55	100 pulse	
12-025	Front Tamper Mot High REAR ON/OFF	Enable = H: Disabled; L: Enabled B/C/SB-Fin: Dir = H: Rear; L: Front A-Fin: Dir = H: Front; L: Rear	Pulse: ON H: OFF	Front Tamper Rear shift - High Speed	12-20, 12-21, 12-22, 12-23, 12-24, 13-48, 13-49, 13-50, 13-51, 13-52, 13-53, 13-54, 13-55	100 pulse SB-Fin: 82 pulse	
12-026	Rear Tamper Mot Low FRONT ON/OFF	Enable = H: Disabled; L: Enabled B/C-Fin: Dir = H: Rear; L: Front A/SB-Fin: Dir = H: Front; L: Rear	Pulse: ON H: OFF	Rear Tamper Front shift - Low Speed	12-27, 12-28, 12-29, 12-30, 12-31, 13-56, 13-57, 13-58, 13-59, 13-60, 13-61, 13-62, 13-63	100 pulse SB-Fin: 82 pulse	

Table 10 Professional Finisher Output Codes

Chain-Link	Name	The meaning of the High indication			Multiple Output Prohibited Items	Timer Off	Conditions
		Port Level	Connector Level	Meaning			
12-027	Rear Tamper Mot Middle FRONT ON/OFF	Enable = H: Disabled; L: Enabled B/C-Fin: Dir = H: Rear; L: Front A-Fin: Dir = H: Front; L: Rear	Pulse: ON H: OFF	Rear Tamper Front shift - Medium Speed	12-26, 12-28, 12-29, 12-30, 12-31, 13-56, 13-57, 13-58, 13-59, 13-60, 13-61, 13-62, 13-63	100 pulse	
12-028	Rear Tamper Mot High FRONT ON/OFF	Enable = H: Disabled; L: Enabled B/C-Fin: Dir = H: Rear; L: Front A/SB-Fin: Dir = H: Front; L: Rear	Pulse: ON H: OFF	Rear Tamper Front shift - High Speed	12-26, 12-27, 12-29, 12-30, 12-31, 13-56, 13-57, 13-58, 13-59, 13-60, 13-61, 13-62, 13-63	100 pulse SB-Fin: 82 pulse	
12-029	Rear Tamper Mot Low REAR ON/OFF	Enable = H: Disabled; L: Enabled B/C-Fin: Dir = H: Rear; L: Front A/SB-Fin: Dir = H: Front; L: Rear	Pulse: ON H: OFF	Rear Tamper Rear shift - Low Speed	12-26, 12-27, 12-28, 12-30, 12-31, 13-56, 13-57, 13-58, 13-59, 13-60, 13-61, 13-62, 13-63	100 pulse SB-Fin: 82 pulse	

Table 10 Professional Finisher Output Codes

Chain-Link	Name	The meaning of the High indication			Multiple Output Prohibited Items	Timer Off	Conditions
		Port Level	Connector Level	Meaning			
12-030	Rear Tamper Mot Middle REAR ON/OFF	Enable = H: Disabled; L: Enabled B/C-Fin: Dir = H: Rear; L: Front A-Fin: Dir = H: Front; L: Rear	Pulse: ON H: OFF	Rear Tamper Rear shift - Medium Speed	12-26, 12-27, 12-28, 12-29, 12-31, 13-56, 13-57, 13-58, 13-59, 13-60, 13-61, 13-62, 13-63	100 pulse	
12-031	Rear Tamper Mot High REAR ON/OFF	Enable = H: Disabled; L: Enabled B/C-Fin: Dir = H: Rear; L: Front A/SB-Fin: Dir = H: Front; L: Rear	Pulse: ON H: OFF	Rear Tamper Rear shift - High Speed	12-26, 12-27, 12-28, 12-29, 12-30, 13-56, 13-57, 13-58, 13-59, 13-60, 13-61, 13-62, 13-63	100 pulse SB-Fin: 82 pulse	
12-041	Stapler Move Mot Middle FRONT ON/OFF	Enable = H: Enabled; L: Disabled Dir = H: Rear; L: Front CurrentCtrl = H: Current Low; L: Current High	Pulse (LowDuty): ON Pulse (HiDuty): OFF	Stapler Move Front shift - Medium Speed	12-42, 12-44, 12-45	400 pulse	

Table 10 Professional Finisher Output Codes

Chain-Link	Name	The meaning of the High indication			Multiple Output Prohibited Items	Timer Off	Conditions
		Port Level	Connector Level	Meaning			
12-042	Stapler Move Mot High FRONT ON/OFF	Enable = H: Enabled; L: Disabled Dir = H: Rear; L: Front CurrentCtrl = H: Current Low; L: Current High SB-Fin: Dir = H: Front; L: Rear	SB-Fin: Pulse: ON Low: OFF Other than SB-Fin: Pulse: ON H: OFF	Stapler Move Front shift - High Speed	12-41, 12-44, 12-45	400 pulse	
12-044	Stapler Move Mot Middle REAR ON/OFF	Enable = H: Enabled; L: Disabled Dir = H: Rear; L: Front CurrentCtrl = H: Current Low; L: Current High	Pulse (LowDuty): ON Pulse (HiDuty): OFF	Stapler Move Rear shift - Medium Speed	12-41, 12-42, 12-45	400 pulse	
12-045	Stapler Move Mot High REAR ON/OFF	Enable = H: Enabled; L: Disabled Dir = H: Rear; L: Front CurrentCtrl = H: Current Low; L: Current High SB-Fin: Dir = H: Front; L: Rear	SB-Fin: Pulse: ON Low: OFF Other than SB-Fin: Pulse: ON H: OFF	Stapler Move Rear shift - High Speed	12-41, 12-42, 12-44	400 pulse	

Table 10 Professional Finisher Output Codes

Chain-Link	Name	The meaning of the High indication			Multiple Output Prohibited Items	Timer Off	Conditions
		Port Level	Connector Level	Meaning			
12-046	Staple Motor FORWARD ON/OFF	Enable = H: Disabled; L: Enabled Dir = H: CW; L: CCW MotStop = H: Normal; L: Stop SB-Fin: Mot CCW = Mot Nrml: H; Mot Rev: L Mot CW = Mot Nrml: L; Mot Rev: H	H: ON; L: OFF	Rotates the Staple Motor forward.	12-47	Stops when Staple Home is OFF Æ ON (Becomes longer when failure occurs)	
12-047	Staple Motor REVERSE ON/OFF	Enable = H: Disabled; L: Enabled Dir = H: CW; L: CCW MotStop = H: Normal; L: Stop SB-Fin: Mot CCW = Mot Nrml: H; Mot Rev: L Mot CW = Mot Nrml: L; Mot Rev: H	H: ON; L: OFF	Rotates the Staple Motor backward.	12-46	Specified time	Staple Home SNR = Not at Home

Table 10 Professional Finisher Output Codes

Chain-Link	Name	The meaning of the High indication			Multiple Output Prohibited Items	Timer Off	Conditions
		Port Level	Connector Level	Meaning			
12-050	Set Clamp CLUTCH ON/OFF	H: Clutch OFF, L: Clutch ON	L: ON; H: OFF	Rotates the Set Clamp Paddle.	-	200 ms SB-Fin: 200 ms T.B.D.	
12-051	Sub Paddle Sol	Do not exist	Do not exist	-	-	-	
12-052	Eject Clamp Motor UP ON/OFF	Mot CW = H: Mot OFF; L: Mot CW ON Mot CCW = H: Mot OFF; L: Mot CCW ON	H: ON; L: OFF	Eject Clamp Roll Up operation	12-53	Stops when Low is detected. (approx. 15ms) (320 ms when failure occurs)	Clamp Home SNR H state

Table 10 Professional Finisher Output Codes

Chain-Link	Name	The meaning of the High indication			Multiple Output Prohibited Items	Timer Off	Conditions
		Port Level	Connector Level	Meaning			
12-053	Eject Clamp Motor DOWN ON/OFF	Mot CW = H: Mot OFF; L: Mot CW ON Mot CCW = H: Mot OFF; L: Mot CCW ON	H: ON; L: OFF	Eject Clamp Roll Down operation Wakasa C-Fin: Rotates in CCW direction, stops when sensor is blocked	12-52	Stops when Hi is detected (approx. 15ms) (320ms when failure occurs)	Clamp Home SNR L state Wakasa C-Fin: No condition
12-054	Eject Motor Low FORWARD ON/OFF	Enable = H: Enabled; L: Disabled B/C-Fin: Dir = H: CW; L: CCW A/SB-Fin: Dir = H: CCW; L: CW CurrentCtrl = H: Current Low; L: Current High	SB-Fin: Pulse: ON Low: OFF Other than SB-Fin: Pulse: ON H: OFF	Rotates the Eject Motor forward - Low Speed	12-55, 12-56, 12-57, 13-11, 13-13, 13-14, 13-16	2000 pulse SB-Fin: 1136 Pulse	
12-055	Eject Motor High FORWARD ON/OFF	Enable = H: Enabled; L: Disabled B/C-Fin: Dir = H: CW; L: CCW A/SB-Fin: Dir = H: CCW; L: CW CurrentCtrl = H: Current Low; L: Current High	SB-Fin: Pulse: ON Low: OFF Other than SB-Fin: Pulse: ON H: OFF	Rotates the Eject Motor forward - High Speed	12-54, 12-56, 12-57, 13-11, 13-13, 13-14, 13-16	2000 pulse SB-Fin: 1136 Pulse	

Table 10 Professional Finisher Output Codes

Chain-Link	Name	The meaning of the High indication			Multiple Output Prohibited Items	Timer Off	Conditions
		Port Level	Connector Level	Meaning			
12-056	Eject Motor Low REVERSE ON/OFF	Enable = H: Enabled; L: Disabled B/C-Fin: Dir = H: CW; L: CCW A-Fin: Dir = H: CCW; L: CW CurrentCtrl = H: Current Low; L: Current High	Pulse: ON H: OFF	Rotates the Eject Motor backward - Low Speed	12-54, 12-55, 12-57, 13-11, 13-13, 13-14, 13-16	2000 pulse	
12-057	Eject Motor High REVERSE ON/OFF	Enable = H: Enabled; L: Disabled B/C-Fin: Dir = H: CW; L: CCW A-Fin: Dir = H: CCW; L: CW CurrentCtrl = H: Current Low; L: Current High	Pulse: ON H: OFF	Rotates the Eject Motor backward - High Speed	12-54, 12-55, 12-56, 13-11, 13-13, 13-14, 13-16	2000 pulse	

Table 10 Professional Finisher Output Codes

Chain-Link	Name	The meaning of the High indication			Multiple Output Prohibited Items	Timer Off	Conditions
		Port Level	Connector Level	Meaning			
12-060	Stacker Motor UP ON/OFF	B/C-Fin: Mot UP = H: Mot Up ON; L: Mot Up OFF Mot DOWN = H: Mot Down ON L: Mot Down OFF A-Fin: Mot UP = H: Mot Up OFF; L: Mot Up ON Mot DOWN = H: Mot Down OFF L: Mot Down ON SB-Fin: UP = Mot Up: L; Mot Down: H DOWN = Mot Up: H; Mot Down: L	H: ON; L: OFF	Stacker Tray upward movement	12-61	B/C/SB-Fin: 500 ms A-Fin: 80ms	B/C-Fin: Upper Limit SNR OFF state A-Fin: If Stacker Height Sensor feedback was detected before or during the operation, output will be prohibited SB-Fin: If Stacker No Paper Sensor feedback was detected before or during the operation, output will be prohibited

Table 10 Professional Finisher Output Codes

Chain-Link	Name	The meaning of the High indication			Multiple Output Prohibited Items	Timer Off	Conditions
		Port Level	Connector Level	Meaning			
12-061	Stacker Motor DOWN ON/OFF	B/C-Fin: Mot UP = H: Mot Up ON; L: Mot Up OFF Mot DOWN = H: Mot Down ON L: Mot Down OFF A-Fin: Mot UP = H: Mot Up OFF; L: Mot Up ON Mot DOWN = H: Mot Down OFF L: Mot Down ON SB-Fin: UP = Mot Up: L; Mot Down: H DOWN = Mot Up: H; Mot Down: L	H: ON; L: OFF	Stacker Tray downward movement	12-60	B/C/SB-Fin: 500 ms A-Fin: 80ms	A-Fin: If Full position was detected before or during the operation, output will be prohibited
12-070	Puncher Move Motor Low FRONT ON/OFF	Enable = H: Enabled; L: Disabled Dir = H: Front; L: Rear CurrentCtrl = H: Current Low; L: Current High	Pulse: ON H: OFF	Puncher Move Front shift - Low Speed	12-71, 12-72, 12-73	100 pulse	
12-071	Puncher Move Motor High FRONT ON/OFF	Enable = H: Enabled; L: Disabled Dir = H: Front; L: Rear CurrentCtrl = H: Current Low; L: Current High	Pulse: ON H: OFF	Puncher Move Front shift - High Speed	12-70, 12-72, 12-73	100 pulse	

Table 10 Professional Finisher Output Codes

Chain-Link	Name	The meaning of the High indication			Multiple Output Prohibited Items	Timer Off	Conditions
		Port Level	Connector Level	Meaning			
12-072	Puncher Move Motor Low REAR ON/OFF	Enable = H: Enabled; L: Disabled Dir = H: Front; L: Rear CurrentCtrl = H: Current Low; L: Current High	Pulse: ON H: OFF	Puncher Move Rear shift - Low Speed	12-70, 12-71, 12-73	100 pulse	
12-073	Puncher Move Motor High REAR ON/OFF	Enable = H: Enabled; L: Disabled Dir = H: Front; L: Rear CurrentCtrl = H: Current Low; L: Current High	Pulse: ON H: OFF	Puncher Move Rear shift - High Speed	12-70, 12-71, 12-72	100 pulse	

Table 10 Professional Finisher Output Codes

Chain-Link	Name	The meaning of the High indication			Multiple Output Prohibited Items	Timer Off	Conditions
		Port Level	Connector Level	Meaning			
12-074	Puncher Mot 2Hole Home Move	Mot Front = H: Mot OFF; L: Mot Front ON Mot Rear = H: Mot OFF; L: Mot Rear ON Speed = H: High Speed; L: Low Speed	Pulse: ON L: OFF	Puncher 2-hole Punch Position Home operation	12-75, 12-76, 12-77, 12-78, 12-79	If it is not at Home position, it will stop once Home operation completes (Becomes longer when failure occurs)	

Table 10 Professional Finisher Output Codes

Chain-Link	Name	The meaning of the High indication			Multiple Output Prohibited Items	Timer Off	Conditions
		Port Level	Connector Level	Meaning			
12-075	Puncher Mot 3Hole Home Move	Mot Front = H: Mot OFF; L: Mot Front ON Mot Rear = H: Mot OFF; L: Mot Rear ON Speed = H: High Speed; L: Low Speed	Pulse: ON L: OFF	Puncher 3-hole Punch Position Home operation	12-74, 12-76, 12-77, 12-78, 12-79	If it is not at Home position, it will stop once Home operation completes (Becomes longer when failure occurs)	

Table 10 Professional Finisher Output Codes

Chain-Link	Name	The meaning of the High indication			Multiple Output Prohibited Items	Timer Off	Conditions
		Port Level	Connector Level	Meaning			
12-076	Puncher Mot 4Hole Home Move	Mot Front = H: Mot OFF; L: Mot Front ON Mot Rear = H: Mot OFF; L: Mot Rear ON Speed = H: High Speed; L: Low Speed	Pulse: ON L: OFF	Puncher 4-hole Punch Position Home operation	12-74, 12-75, 12-77, 12-78, 12-79	If it is not at Home position, it will stop once Home operation completes (Becomes longer when failure occurs)	

Table 10 Professional Finisher Output Codes

Chain-Link	Name	The meaning of the High indication			Multiple Output Prohibited Items	Timer Off	Conditions
		Port Level	Connector Level	Meaning			
12-077	Punch (2Hole)	Mot Front = H: Mot OFF; L: Mot Front ON Mot Rear = H: Mot OFF; L: Mot Rear ON Speed = H: High Speed; L: Low Speed SB-Fin: Mot CCW = MotA: H; MotB: L Mot CW = MotA: L; MotB: H	H: ON; L: OFF	2-hole Punch operation	12-74, 12-75, 12-76, 12-78, 12-79	Stops when Home Sensor OFF Æ ON is detected (Becomes longer when failure occurs)	

Table 10 Professional Finisher Output Codes

Chain-Link	Name	The meaning of the High indication			Multiple Output Prohibited Items	Timer Off	Conditions
		Port Level	Connector Level	Meaning			
12-078	Punch (3Hole)	Mot Front = H: Mot OFF; L: Mot Front ON Mot Rear = H: Mot OFF; L: Mot Rear ON Speed = H: High Speed; L: Low Speed SB-Fin: Mot CCW = MotA: H; MotB: L Mot CW = MotA: L; MotB: H	H: ON; L: OFF	3-hole Punch operation (For SB-Fin, perform any Punch operation that is not 2-hole. (Depending on the installed Punch Unit, this can be 3-hole, 4-hole, or Mot empty rotation.))	12-74, 12-75, 12-76, 12-77, 12-79	Stops when Home Sensor OFF Æ ON is detected (Becomes longer when failure occurs)	

Table 10 Professional Finisher Output Codes

Chain-Link	Name	The meaning of the High indication			Multiple Output Prohibited Items	Timer Off	Conditions
		Port Level	Connector Level	Meaning			
12-079	Punch (4Hole)	Mot Front = H: Mot OFF; L: Mot Front ON Mot Rear = H: Mot OFF; L: Mot Rear ON Speed = H: High Speed; L: Low Speed SB-Fin: Mot CCW = MotA: H; MotB: L Mot CW = MotA: L; MotB: H	H: ON; L: OFF	4-hole Punch operation (For SB-Fin, perform any Punch operation that is not 2-hole. (Depending on the installed Punch Unit, this can be 3-hole, 4-hole, or Mot empty rotation.))	12-74, 12-75, 12-76, 12-77, 12-78	Stops when Home Sensor OFF Æ ON is detected (Becomes longer when failure occurs)	
12-091	H XPORT Motor 242 ON/OFF	Enable = H: Enabled; L: Disabled CurrentCtrl = H: Current Low; L: Current High	Pulse: ON H: OFF	Rotates the H-Tra/IF Motor forward - Speed 2 242mm/s (Wakasa C-FIn: 350mm/s)	12-90	-	
12-099	Decurler Cam Clutch	H: Clutch OFF, L: Clutch ON	L: ON H (24V): OFF	Drives the Decurler Cam.	-	400 ms	-
12-110	Reg Clutch ON						

Table 10 Professional Finisher Output Codes

Chain-Link	Name	The meaning of the High indication			Multiple Output Prohibited Items	Timer Off	Conditions
		Port Level	Connector Level	Meaning			
13-008	BOOKLET FOLDER ROLL MOT FORWARD ON/OFF	Mot FWD: H; Mot REV: L; FWD Drive Mot FWD: L; Mot REV: H; REV Drive	H: ON; L: OFF	Rotates the Folder Roll forward	13-9	-	This operation is available only when Home is detected for both the BOOKLET TAMPER HOME SENSOR F and the BOOKLET TAMPER HOME SENSOR R

Table 10 Professional Finisher Output Codes

Chain-Link	Name	The meaning of the High indication			Multiple Output Prohibited Items	Timer Off	Conditions
		Port Level	Connector Level	Meaning			
13-009	BOOKLET FOLDER ROLL MOT REVERSE ON/OFF	Mot FWD: H; Mot REV: L; FWD Drive Mot FWD: L; Mot REV: H; REV Drive	H: ON; L: OFF	Rotates the Folder Roll backward	13-8	-	This operation is available only when Home is detected for both the BOOKLET TAMPER HOME SENSOR F and the BOOKLET TAMPER HOME SENSOR R

Table 10 Professional Finisher Output Codes

Chain-Link	Name	The meaning of the High indication			Multiple Output Prohibited Items	Timer Off	Conditions
		Port Level	Connector Level	Meaning			
13-010	BOOKLET KNIFE KNIFE FLAPPER SOL	H: ON; L: OFF	H: ON; L: OFF	Booklet Knife Flapper Solenoid ON/OFF	-	200 msec	This operation is available only when Home is detected for both the BOOKLET TAMPER HOME SENSOR F and the BOOKLET TAMPER HOME SENSOR R
13-011	BOOKLET ENDGUIDE MOT LOW DOWN	Enable = H: Enabled; L: Disabled Dir = H: UP; L: DOWN CurrentCtrl = H: Current High; L: Current Low	Pulse: ON H: OFF	Drives the Booklet End Guide downward at 450pps	12-54, 12-55, 12-56, 12-57, 13-13, 13-14, 13-16	200 pulse	
13-013	BOOKLET ENDGUIDE MOT HI DOWN	Enable = H: Enabled; L: Disabled Dir = H: UP; L: DOWN CurrentCtrl = H: Current High; L: Current Low	Pulse: ON H: OFF	Drives the Booklet End Guide downward at 1002pps	12-54, 12-55, 12-56, 12-57, 13-11, 13-14, 13-16	200 pulse	

Table 10 Professional Finisher Output Codes

Chain-Link	Name	The meaning of the High indication			Multiple Output Prohibited Items	Timer Off	Conditions
		Port Level	Connector Level	Meaning			
13-014	BOOKLET ENDGUIDE MOT LOW UP	Enable = H: Enabled; L: Disabled Dir = H: UP; L: DOWN CurrentCtrl = H: Current High; L: Current Low	Pulse: ON H: OFF	Drives the Booklet End Guide upward at 450pps	12-54, 12-55, 12-56, 12-57, 13-11, 13-13, 13-16	200 pulse	
13-016	BOOKLET ENDGUIDE MOT HI UP	Enable = H: Enabled; L: Disabled Dir = H: UP; L: DOWN CurrentCtrl = H: Current High; L: Current Low	Pulse: ON H: OFF	Drives the Booklet End Guide upward at 1002pps	12-54, 12-55, 12-56, 12-57, 13-11, 13-13, 13-14	200 pulse	
13-017	BOOKLET STAPLE ON	H: OFF; L: ON (Turns ON by H Æ L)	H: ON; L: OFF	Performs Booklet Stapler F/R stapling	-	Stops when stapling is complete (at 620 ms)	This operation is available only when the Booklet Stapler Error is OFF and the Booklet Compiler NO Paper SENSOR is ON (Paper detected)
13-020	TRAY BELT DRIVE MOTOR ON/OFF	H: ON; L: OFF	H: ON; L: OFF	Drives the Tray Belt	-	-	

Table 10 Professional Finisher Output Codes

Chain-Link	Name	The meaning of the High indication			Multiple Output Prohibited Items	Timer Off	Conditions
		Port Level	Connector Level	Meaning			
13-021	BOOKLET PADDLE MOT ON/OFF	H: OFF; L: ON	L: ON; H: OFF	Rotates the Booklet Paddle	-	-	
13-048	BOOKLET TAMPER MOT F REAR ON/OFF 1	Enable = H: Disabled; L: Enabled Dir = H: Front; L: Rear	Pulse: ON H: OFF	Drives the Booklet Tamper F in the front (Home) direction at 985pps	12-20, 12-21, 12-22, 12-23, 12-24, 12-25, 13-49, 13-50, 13-51, 13-52, 13-53, 13-54, 13-55	100 pulse	This operation is available only when the Knife Home Sensor is turned ON
13-049	BOOKLET TAMPER MOT F REAR ON/OFF 2	Enable = H: Disabled; L: Enabled Dir = H: Front; L: Rear	Pulse: ON H: OFF	Drives the Booklet Tamper F in the front (Home) direction at 645pps	12-20, 12-21, 12-22, 12-23, 12-24, 12-25, 13-48, 13-50, 13-51, 13-52, 13-53, 13-54, 13-55	100 pulse	This operation is available only when the Knife Home Sensor is turned ON

Table 10 Professional Finisher Output Codes

Chain-Link	Name	The meaning of the High indication			Multiple Output Prohibited Items	Timer Off	Conditions
		Port Level	Connector Level	Meaning			
13-050	BOOKLET TAMPER MOT F REAR ON/ OFF 3	Enable = H: Disabled; L: Enabled Dir = H: Front; L: Rear	Pulse: ON H: OFF	Drives the Booklet Tamper F in the front (Home) direction at 465pps	12-20, 12-21, 12-22, 12-23, 12-24, 12-25, 13-48, 13-49, 13-51, 13-52, 13-53, 13-54, 13-55	100 pulse	This operation is available only when the Knife Home Sensor is turned ON
13-051	BOOKLET TAMPER MOT F REAR ON/ OFF 4	Enable = H: Disabled; L: Enabled Dir = H: Front; L: Rear	Pulse: ON H: OFF	Drives the Booklet Tamper F in the front (Home) direction at 235pps	12-20, 12-21, 12-22, 12-23, 12-24, 12-25, 13-48, 13-49, 13-50, 13-52, 13-53, 13-54, 13-55	100 pulse	This operation is available only when the Knife Home Sensor is turned ON
13-052	BOOKLET TAMPER MOT F FRONT ON/ OFF 1	Enable = H: Disabled; L: Enabled Dir = H: Front; L: Rear	Pulse: ON H: OFF	Drives the Booklet Tamper F in the rear (Tamping) direction at 985pps	12-20, 12-21, 12-22, 12-23, 12-24, 12-25, 13-48, 13-49, 13-50, 13-51, 13-53, 13-54, 13-55	100 pulse	This operation is available only when the Knife Home Sensor is turned ON

Table 10 Professional Finisher Output Codes

Chain-Link	Name	The meaning of the High indication			Multiple Output Prohibited Items	Timer Off	Conditions
		Port Level	Connector Level	Meaning			
13-053	BOOKLET TAMPER MOT F FRONT ON/ OFF 2	Enable = H: Disabled; L: Enabled Dir = H: Front; L: Rear	Pulse: ON H: OFF	Drives the Booklet Tamper F in the rear (Tamping) direction at 645pps	12-20, 12-21, 12-22, 12-23, 12-24, 12-25, 13-48, 13-49, 13-50, 13-51, 13-52, 13-54, 13-55	100 pulse	This operation is available only when the Knife Home Sensor is turned ON
13-054	BOOKLET TAMPER MOT F FRONT ON/ OFF 3	Enable = H: Disabled; L: Enabled Dir = H: Front; L: Rear	Pulse: ON H: OFF	Drives the Booklet Tamper F in the rear (Tamping) direction at 465pps	12-20, 12-21, 12-22, 12-23, 12-24, 12-25, 13-48, 13-49, 13-50, 13-51, 13-52, 13-53, 13-55	100 pulse	This operation is available only when the Knife Home Sensor is turned ON
13-055	BOOKLET TAMPER MOT F FRONT ON/ OFF 4	Enable = H: Disabled; L: Enabled Dir = H: Front; L: Rear	Pulse: ON H: OFF	Drives the Booklet Tamper F in the rear (Tamping) direction at 235pps	12-20, 12-21, 12-22, 12-23, 12-24, 12-25, 13-48, 13-49, 13-50, 13-51, 13-52, 13-53, 13-54	100 pulse	This operation is available only when the Knife Home Sensor is turned ON

Table 10 Professional Finisher Output Codes

Chain-Link	Name	The meaning of the High indication			Multiple Output Prohibited Items	Timer Off	Conditions
		Port Level	Connector Level	Meaning			
13-056	BOOKLET TAMPER MOT R FRONT 1 ON/OFF	Enable = H: Disabled; L: Enabled Dir = H: Front; L: Rear	Pulse: ON H: OFF	Drives the Booklet Tamper R in the front (Tamping) direction at 985pps	12-26, 12-27, 12-28, 12-29, 12-30, 12-31, 13-57, 13-58, 13-59, 13-60, 13-61, 13-62, 13-63	100 pulse	This operation is available only when the Knife Home Sensor is turned ON
13-057	BOOKLET TAMPER MOT R FRONT 2 ON/OFF	Enable = H: Disabled; L: Enabled Dir = H: Front; L: Rear	Pulse: ON H: OFF	Drives the Booklet Tamper R in the front (Tamping) direction at 645pps	12-26, 12-27, 12-28, 12-29, 12-30, 12-31, 13-56, 13-58, 13-59, 13-60, 13-61, 13-62, 13-63	100 pulse	This operation is available only when the Knife Home Sensor is turned ON
13-058	BOOKLET TAMPER MOT R FRONT 3 ON/OFF	Enable = H: Disabled; L: Enabled Dir = H: Front; L: Rear	Pulse: ON H: OFF	Drives the Booklet Tamper R in the front (Tamping) direction at 465pps	12-26, 12-27, 12-28, 12-29, 12-30, 12-31, 13-56, 13-57, 13-59, 13-60, 13-61, 13-62, 13-63	100 pulse	This operation is available only when the Knife Home Sensor is turned ON

Table 10 Professional Finisher Output Codes

Chain-Link	Name	The meaning of the High indication			Multiple Output Prohibited Items	Timer Off	Conditions
		Port Level	Connector Level	Meaning			
13-059	BOOKLET TAMPER MOT R FRONT 4 ON/OFF	Enable = H: Disabled; L: Enabled Dir = H: Front; L: Rear	Pulse: ON H: OFF	Drives the Booklet Tamper R in the front (Tamping) direction at 235pps	12-26, 12-27, 12-28, 12-29, 12-30, 12-31, 13-56, 13-57, 13-58, 13-60, 13-61, 13-62, 13-63	100 pulse	This operation is available only when the Knife Home Sensor is turned ON
13-060	BOOKLET TAMPER MOT R REAR 1 ON/OFF	Enable = H: Disabled; L: Enabled Dir = H: Front; L: Rear	Pulse: ON H: OFF	Drives the Booklet Tamper R in the rear (Home) direction at 985pps	12-26, 12-27, 12-28, 12-29, 12-30, 12-31, 13-56, 13-57, 13-58, 13-59, 13-61, 13-62, 13-63	100 pulse	This operation is available only when the Knife Home Sensor is turned ON
13-061	BOOKLET TAMPER MOT R REAR 2 ON/OFF	Enable = H: Disabled; L: Enabled Dir = H: Front; L: Rear	Pulse: ON H: OFF	Drives the Booklet Tamper R in the rear (Home) direction at 645pps	12-26, 12-27, 12-28, 12-29, 12-30, 12-31, 13-56, 13-57, 13-58, 13-59, 13-60, 13-62, 13-63	100 pulse	This operation is available only when the Knife Home Sensor is turned ON

Table 10 Professional Finisher Output Codes

Chain-Link	Name	The meaning of the High indication			Multiple Output Prohibited Items	Timer Off	Conditions
		Port Level	Connector Level	Meaning			
13-062	BOOKLET TAMPER MOT R REAR 3 ON/OFF	Enable = H: Disabled; L: Enabled Dir = H: Front; L: Rear	Pulse: ON H: OFF	Drives the Booklet Tamper R in the rear (Home) direction at 465pps	12-26, 12-27, 12-28, 12-29, 12-30, 12-31, 13-56, 13-57, 13-58, 13-59, 13-60, 13-61, 13-63	100 pulse	This operation is available only when the Knife Home Sensor is turned ON
13-063	BOOKLET TAMPER MOT R REAR 4 ON/OFF	Enable = H: Disabled; L: Enabled Dir = H: Front; L: Rear	Pulse: ON H: OFF	Drives the Booklet Tamper R in the rear (Home) direction at 235pps	12-26, 12-27, 12-28, 12-29, 12-30, 12-31, 13-56, 13-57, 13-58, 13-59, 13-60, 13-61, 13-62	100 pulse	This operation is available only when the Knife Home Sensor is turned ON
13-064	BOOKLET PAPER PATH MOT 1 ON/OFF	Enable = H: Enabled; L: Disabled Dir = H: REV; L: FWD CurrentCtrl = H: Current High; L: Current Low	Pulse: ON H: OFF	Drives the Booklet IN Roll. 350mm/s	13-65, 13-66, 13-67	-	

Table 10 Professional Finisher Output Codes

Chain-Link	Name	The meaning of the High indication			Multiple Output Prohibited Items	Timer Off	Conditions
		Port Level	Connector Level	Meaning			
13-065	BOOKLET PAPER PATH MOT 2 ON/OFF	Enable = H: Enabled; L: Disabled Dir = H: REV; L: FWD CurrentCtrl = H: Current High; L: Current Low	Pulse: ON H: OFF	Drives the Booklet IN Roll. T.B.D (Temporary: 277)mm/s	13-64, 13-66, 13-67	-	
13-066	BOOKLET PAPER PATH MOT 3 ON/OFF	Enable = H: Enabled; L: Disabled Dir = H: REV; L: FWD CurrentCtrl = H: Current High; L: Current Low	Pulse: ON H: OFF	Drives the Booklet IN Roll: 250mm/s	13-64, 13-65, 13-67	-	
13-067	BOOKLET PAPER PATH MOT 4 ON/OFF	Enable = H: Enabled; L: Disabled Dir = H: REV; L: FWD CurrentCtrl = H: Current High; L: Current Low	Pulse: ON H: OFF	Drives the Booklet IN Roll: 50mm/s	13-64, 13-65, 13-66	-	
13-068	BOOKLET GATE SOL STACKER	Sol Stacker: H; Sol Booklet: L Switches the path to the Stacker Path Sol Stacker:L; Sol Booklet: H Switches the path to the Booklet Path	H: ON; L: OFF	Switches Booklet Gate to Stacker Path	13-69	100 msec	
13-069	BOOKLET GATE SOL BOOKLET	Sol Stacker: H; Sol Booklet: L Switches the path to the Stacker Path Sol Stacker:L; Sol Booklet: H Switches the path to the Booklet Path	H: ON; L: OFF	Switches Booklet Gate to Booklet Path	13-68	100 msec	

dC361 NVM Save and Restore

Purpose

Provides a method to capture the state of NVM to a file and write NVM file back to the NVM device when desired.

Procedure

1. Enter the UI Diagnostic (CSE) Mode.
2. Select the **Adjustments tab** .
3. Select **dc361 NVM Save and Restore**. The dc361 NVM Save and Restore window opens (Figure 1)

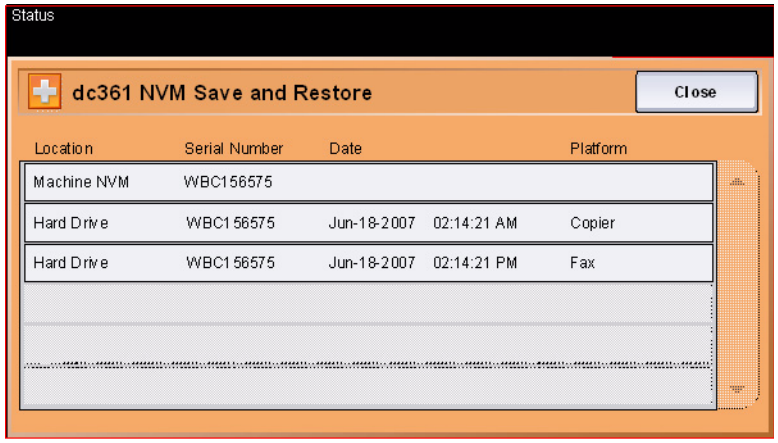

Figure 1 dc361 NVM Save and Restore

The top line represents the data stored in the various NVM PWBs and chips in the machine.

4. To save NVM:
   a. Connect your USB Flash Drive to one of the USB ports on the machine
   b. Touch the **Machine NVM** line. A popup menu will open. Select **Save to Hard Drive**.
   c. New line(s) will be added to the screen.

NOTE: *Always save NVM data to the USB Device if you are going to perform an AltBoot; that procedure will delete all data from the Hard Drive*

   d. Touch the **Hard Drive** line. A popup menu will open. Select **Copy to USB Device**.
5. To restore NVM:
   a. Touch the **USB Device** line. A popup menu will open. Select **Copy to Hard Drive**.
   b. Touch the **Hard Drive** line. A popup menu will open. Select **Restore Machine NVM.**

dC603 Image Size Adjustment

Purpose

The purpose of the dc603 Image Size Adjustment Routine is to compensate for minor variations in machine speed which result in process direction elongation or compression of the image placed on the media. Compensation of process direction image size offset shall be approximately +/- 1.0mm over a 200mm length on the test pattern image.

Initial Actions

Check

1. Enter the UI Diagnostic (CSE) Mode.
2. Select the **Adjustments** tab.
3. Select **dc603 Image Size Adjustment**. The Image Size Adjustment screen will be displayed.
4. Select paper type. Plain, Glossy, Heavyweight, Heavyweight Glossy, Extra Heavyweight and Extra Heavyweight Glossy. (Default Plain).
5. Select output color. (Default Color)
6. Select Print Sample.
7. Check the measured value in process direction of 10 grid squares. The results should be 199.8 mm as in Figure 1. If the desired result is not achieved continue with this procedure.

Procedure

NOTE: *• Total range of adjustment (-1.0mm to +1.0mm). The actual range of adjustment is limited by the current setting or default value of NVM. Refer to Table 1.*

- *Successful adjustment is indicated with a message.*
- *Failure to adjust the Image Size (% Offset) is indicated by a message informing of the failure. Failure messages require a user response to close the message.*
- *A typical reason that the image size% offset fails to adjust is because the value being written exceeds the narrow NVM range.*

1. Enter the UI Diagnostic (CSE) Mode.
2. Select the **Adjustments** tab.
3. Select **dc603 Image Size Adjustment**. The Image Size Adjustment screen will be displayed.
4. Select paper type. Plain, Glossy, Heavyweight, Heavyweight Glossy, Extra Heavyweight and Extra Heavyweight Glossy. (Default Plain).
5. Select output color. (Default Color)
6. Select Print Sample.
7. Follow the directions at the UI.

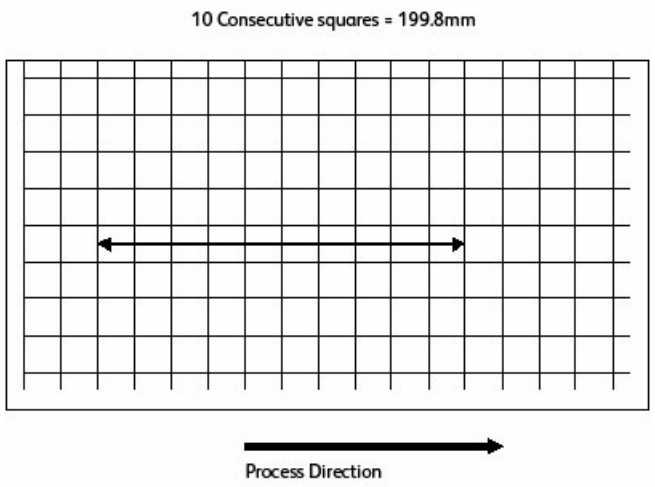

Figure 1 Image Size Adjustment Check

Table 1 Size Adj.

dC603 Image Size Adjustments (Slow Scan%)							
Chain	**Link**	**Description**	**Model Speed**	**Speed**	**Media**	**Range**	**Default**
760	070	79mm/sec Slow Scan direction Enlargement Offset	Low	79	Extra Heavyweight	-10 to +10	Low 2
760	071	121mm/sec Slow Scan direction Enlargement Offset	Both	121	Extra Heavyweight for high, Heavy-weight for Low, SEF plain for Low	-10 to +10	High 3 Low 0
760	072	175mm/sec Slow Scan direction Enlargement Offset	Both	175	Heavyweight for High, Plain for Low	-10 to +10	High 2 Low -2
760	073	200mm/sec Slow Scan direction Enlargement Offset	High	200		-10 to +10	High -2
760	074	225mm/sec Slow Scan direction Enlargement Offset	High	225		-10 to +10	High -3
760	075	255mm/sec Slow Scan direction Enlargement Offset	High	255	Plain for High	-10 to +10	High -3
760	076	Special Paper Slow Scan direction Enlargement Offset				-10 to +10	High 0 Low 0

dC612 Test Pattern Print

Purpose

Outputs the built-in test patterns, to help identify Image Quality problems.

Procedure

1. Enter UI Diagnostic (CSE) Mode.
2. Select the **Diagnostics** tab > **dC 612 Print Test Pattern.**
3. Select a pattern from the **Test Patterns** menu.

NOTE: *Not all of the following parameters are applicable to all test patterns; and some test patterns require a specific set of parameters. Refer to Table 1.*

4. Select the **Color Mode**.
5. Select the paper **Tray** to be used.

   NOTE: *If you open the paper tray to change size, but do not get a "Confirm paper tray status" screen on the UI, you must exit diagnostics in order to confirm the change. Reenter diagnostics and continue with the procedure.*

6. From the **Plex Mode** drop-down menu, select simplex or duplex.
7. Select the number of **Copies** (prints) to be made.
8. Select **Start**.

CAUTION

Test Pattern 8 (16 Tones) will cause print deletions if run in 4 color mode. Test Pattern 9 (All Half Tone) will cause print jams if run in 3 or 4 color mode. These patterns should be run in a single color only.

Table 1 Test Patterns

#	Description	Source	Paper Size	Color Mode
1	90 Degree Print (90 Degree Grid)	IOT	11x17/A3	4C
2	Diagonal Print (45 Degree Grid)	IOT	11x17/A3	4C, red, blue
3	A1 Patch Pattern	IOT	11x17/A3	4C
4	B Patch Pattern	IOT	11x17/A3	4C
5	C Patch Pattern	IOT	LTR/A4 SEF	4C
6	C-TRACS Check PG	IOT	LTR/A4 SEF	4C
7	ProCon PG	IOT	LTR/A4 LEF	4C
8	16 Tone PG	IOT	LTR/A4 LEF	K, cyan, magenta, yellow, 3C
9	Full Halftone	IOT	LTR/A4 LEF	K, cyan, magenta, yellow
10	Single K Full Halftone	IOT	11x17/A3	K
11	Drum Pitch Halftone	IOT	11x17/A3	4C

Table 1 Test Patterns

#	Description	Source	Paper Size	Color Mode
12	LPH Streak Adj. chart (IOT Mounted)	IOT	11x17/A3	4C
13	LPH Streak Adj. chart (LPH Mounted)	IOT	11x17/A3	4C
14	Xtalk Test Chart (Failure Analysis)	IOT	LTR/A4 SEF	4C
15	Grid (Fold Position Adjustment)	IOT	LTR/A4 SEF	4C
16	Ladder	IOT	LTR/A4 SEF	4C

dC640 Video Path Tests

Purpose

Provides a method to test EPC memory, video path integrity, and SBC <-> CCs communication on the SBC PWB.

Procedure

1. Enter the UI Diagnostic (CSE) Mode.
2. Select **Diagnostics** tab .
3. Select the **POST** tab.
4. Select **dc640 Video Path Integrity...**
5. Select **Start**. For any failure, replace the SBC PWB (PL 35.2).

dC671 RegiCon Measurement Cycle Control

Purpose

This procedure checks and adjusts color registration.

- Performs measurement to determine the condition of the registration control.
- Checks that the Belt control etc. are operating normally.
- Measures/displays the amount of color shift relative to Black in the Fast Scan/Slow Scan direction.
- Displays the results as either **OK** or **NG**

For instructions, refer to ADJ 9.10.

dC673 RegiCon Control Sensor Check Cycle

Purpose

This is a self-diagnostic cycle for checking that the registration detection system is operating normally. Color shift is detected using a Cyan patch. Any misregistration detected in the MOB sensor is displayed on the UI screen. This result is compared with the target value to determine the **OK** or **NG** status. Correction is not performed.

For instructions, refer to ADJ 9.11.

dC675 RegiCon Setup Cycle Control

Purpose

This is a setup procedure to be used after replacement of the ROS, the Transfer Belt, or the IBT Assembly

For instructions, refer to ADJ 9.9.

dC710 No Paper Run

Purpose

This routine operates all of the media feed and transport functions without actually feeding media, to enable examination of the subsystem operation.

NOTE: *Even though no paper is fed, Tray 1 must be loaded with 8.5 x 11 or A4 paper in order to run this routine.*

If you open the paper tray to change size, but do not get a "Confirm paper tray status" screen on the UI, you must exit diagnostics in order to confirm the change. Reenter diagnostics and continue with the procedure.

Procedure

1. Enter the **Diagnostic Mode**. Refer to UI Diagnostic (CSE) Mode.
2. Select the **Maintenance** tab.
3. Select the **Paper Path** tab (not in UI Diagnostics).
4. Select **No Paper Run (dC710)**.
5. Select Color Mode (Color or Fast Black).
6. Enter the number (1 - 99) of simulated print cycles you wish to run. Select **Start** to activate.
7. Select Stop to immediately halt the Routine.

dC740 Tray 5 (MSI) Guide Adjustment

Purpose

This procedure calibrates the paper size detection circuits for Tray 5.

Refer to ADJ 7.1 for instructions

dC909 Calibrate for Paper

Purpose

The “Calibrate for Paper Type” Adjustment feature provides the ability to adjust the 2nd Image Transfer Power output (ATVC) in order to compensate for the use of thick or specialty media. The adjustment is commonly called “Calibrate for Paper Type” and is located on the user interface.

The purpose of the Calibrate for Paper Type Adjustment (dc909) is to compensate for image quality problems associated with the use of different media types. This adjustment is effective in correcting the following types of defects on both simplex and duplex prints;

- Low density
- Foggy background
- Voids
- White spots

Procedure

Table 1 The Relationship Between the Classification on the UI and the Paper Type (Factory Settings)

UI Classification	Paper Type
Bond Paper	Plain A
Plain (Tray Default Setting)	Plain B
Recycled	Plain C
Reload	Plain B
Heavyweight	Heavyweight A
Heavyweight (Reload)	Heavyweight A (Reload)
Extra Heavyweight	Extra Heavyweight A
Extra Heavyweight (Reload)	Extra Heavyweight A (Reload)
Custom Paper 1 Image Quality	Plain B

1. Load the paper to be adjusted into the paper tray (11x17 is recommended) and change the "**Paper Type Settings**" to match the paper.
2. Enter the UI Diagnostic (CSE) Mode.
3. Select the **Adjustments** tab.
4. Select **dc909 Calibrate for Paper**. The Calibrate for Paper Adjustment screen will be displayed.
5. Select **[Paper Supply]** and select the tray containing the paper to be adjusted.
6. Select **[Paper Type]** and select the paper type that was set in Step 1.
7. Select **Test Print** to output the Test Pattern (Figure 1).

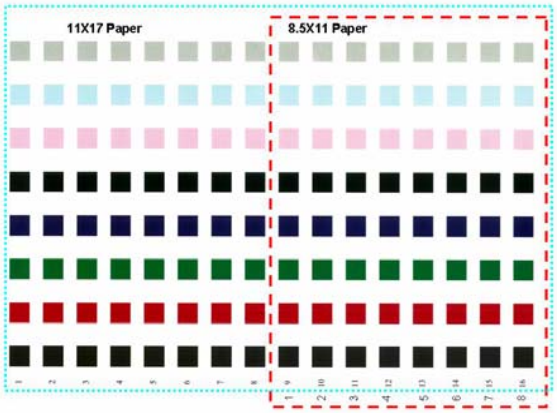

Figure 1 Test Pattern

NOTE: *The Test Pattern is meant to be printed on 11x17"/A3 paper; portions of the pattern may be missing when printed on other sizes. LTR/ A4 LEF only shows the latter half of the pattern; although the patch number at the paper lead edge is "9", the transfer output will be printed as "1".*

8. Select what you would consider as the best value from the columns (1~16) on the Test Pattern. The selection criteria are:
   a. Whether there are any white spots in the K color patch (if there are, it indicates excessive voltage)
   b. Whether the mixed K looks bluish (if it is, it indicates insufficient voltage)
   c. Whether the halftone granularity is good (if it is bad, it indicates excessive voltage)
9. Select **[Type Offset]**, **Up** or **Down** buttons to raise or lower 2nd Transfer Voltage.
10. Select **Write NVM**.
11. Select **Test Print**. Verify that the desired outcome is achieved. If desired outcome is not achieved, repeat this procedure. If desired outcome is achieved, continue to step 12.
12. Select **Close** to end.

dC924 TRC Adjustment

Purpose

This procedure allows you to perform a manual density adjustment. It sets an offset amount of the ADC-LUT created by the ADC patch to finely adjust the gradation.

Refer to ADJ 9.13 for instructions.

dC937 ProCon On/Off Print

Purpose

This procedure prints out the Process Control Test Pattern in two different modes. The comparison between the two prints can help isolate process control-related image quality problems.

Refer to ADJ 9.3 for instructions.

dC945 IIT Calibration

Purpose

This procedure sets the following:.

- White Reference Correction Coefficient.
- IIT sensitivity dispersion (CCD Calibration).
- Platen-to-Lens-to-CCD alignment (Optical Axis)

Refer to ADJ 6.5 and ADJ 6.6 for instructions.

dC949 ATC Default Developer Setup

Purpose

NOTE: *For details, see adjustment ADJ 9.8 Default Developer ATC Setup.*

dC950 ATC Sensor Setup

Purpose

To set the calibration values [ATC Correction Coefficient], [ATC Correction Offset] in NVM to calibrate the new ATC Sensor

Refer to ADJ 9.7 for instructions.

dC991 Tone Up/Tone Down

Purpose

This procedure compares measured toner concentration against a target, and allows manual adjustment of TC.

Refer to ADJ 9.14 for instructions.

GP 1 FAX PWB Internal Selftest

Procedure

1. Insert a document in the DADF or place on the glass
2. Select the **Fax** feature from the **All Features** screen on the UI.
3. Enter 0000 as the phone number
4. Select **Start**. The machine will scan the document.
5. The scanned image(s) will be received by the Fax PWB from the SBC PWB. The Fax PWB sends it back to the SBC PWB which sends it to the IOT to print the scanned image.

This is a closed loop test. It does not check the phone line. It does prove that the image path in the machine is working correctly. You should end up with a copy of the scanned document with a fax header on the top of the page. It also will print a transmission report if this feature is enabled in Tools.

GP 2 Accessing Tools

The Tools menu has two levels of access: User (walk-up) and Administrator. User mode offers copy and print color calibration adjustments; Administrator mode offers a more comprehensive suite of options.

A third level (Service Copy mode) is available to CSEs if the Administrator user name and passcode are not at the default, and the Administrator is not available to enter the code.

Entering Administrator mode

1. Press the **Log in/out** button on the UI Control Panel.
2. Enter the administrator User Name and select **Next** (default is **admin**).
3. Enter the Administrator passcode on the touchscreen (default is **1111**).
4. Select **Enter**. Note the **Admin** icon in the upper right corner of the UI.

   NOTE: *Administrator mode remains active until the **Log in/out** button is pressed again. When finished with Tools, always log out of Administrator mode by pressing the **Log in/out** button and confirming logout.*

Entering CSE Service Copy mode

1. Press and hold the **0** button for approximately 5 seconds then simultaneously press the **Start** button on the UI.
2. On the Service Diagnostics Login screen, enter **2732**, then select **Enter**.
3. The CSE Service Copy mode menu will open.
4. The Tools available in this mode are a subset of those available in Administrator mode.

   NOTE: *CSE Service Copy mode remains active until the **Log in/out** button is pressed again. When finished with Tools, always log out of Administrator mode by pressing the **Log in/out** button and confirming logout.*

Accessing the Tools menu

1. Press the **Machine Status** button on the UI Control Panel.
2. Select the **Tools** tab. The Tools menu will be displayed.

   On the left side of the screen are several buttons for the categories of features.

   Within each category are **Groups** of features. Each **Group** contains one or more **Features**.
3. Select the category, then the group, then the feature.

GP 3 Controller Boot Sequence

Sequence

The on-screen indications of a normal bootup are:

- Switch on the power. The Flash screen appears within 10 seconds
- At approximately 45 seconds you should see the XUI start up screen
- At approximately 55 seconds, you will hear the trays initialize.
- At approximately 75 seconds, the Model Information screen appears.
- At approximately 120 seconds, the Configuration Report will print (if enabled).
- Approximate total boot time = 140 seconds for basic services. (2 min. 20 seconds)

NOTE: *Additional installed services (like EFAX, E-mail) require additional pre-loading time (approximately 30 seconds)*

GP 5 Image Quality Calibration

This procedure details the method by which customers can calibrate the Image Quality in either Print or Copy mode.

Procedure

NOTE: *It is not necessary to enter SA mode (log in) in order to perform this procedure.*

1. Press the **Machine Status** button on the UI.
2. Select the **Tools** tab.
3. Select **Troubleshooting**.
4. In the **Troubleshooting** Group, select **Calibration**.
5. Select either **Copy Calibration** or **Print Calibration**.
6. The steps to perform the procedure will be displayed on the UI; take care to follow the instructions exactly.

GP 6 Printing Configuration Reports

Purpose

This procedure describes the procedure for accessing Configuration Reports.

Procedure

A Configuration Report can be produced in three ways:

1. Switching power off then on (if configured)
2. Through use of Centreware® Internet Services.
3. From the local UI:

   NOTE: *It is not necessary to enter SA mode (log in) in order to perform this procedure.*

   - Press the **Machine Status** button on the UI.
   - Select **Machine Information** tab.
   - Select **Information Pages...**
   - Select **Configuration Report** and press the **Print** button.

GP 7 Network Printing Simulation

Purpose

This procedure details a method of troubleshooting network printing problems.

Prerequisites

- Crossover Cable and a PWS equipped with a Network Interface Card.
- User software CD or driver files downloaded and extracted to a folder on the PWS.
- Windows 2000/Windows XP

Procedure

Setup

1. Print the **System Settings List** (Configuration Report). Refer to GP 6.
2. Configure the PWS IP Address:
   a. Right click on the **My Network Places** icon.
   b. Select **Properties** to bring up the Network and Dial-up Connections window.
   c. Right click on **Local Area Connection** and select **Properties**.
   d. Select the **General** tab and scroll down to Internet Protocol (TCP/IP). Highlight **TCP/IP** and select **Properties**.
   e. Select the **Use the following IP address** radio button.
   f. Enter an **IP address** one digit different than the machine IP address listed on the Configuration Report (ex., if the machine IP address is 12.138.147.44, enter 12.138.147.45 or 12.138.147.43).
   g. Enter 255.255.255.0 for **Subnet mask**.
3. Connect the PWS to the printer with the Crossover Cable.
4. Click the Windows **Start** button.
5. Select **Settings**, then **Printers and Faxes**.
6. Select **Add Printer**.
7. On the **Add Printer Wizard** screen, click **Next**.
8. On the next screen, select **Local printer**, then click **Next**.
9. When the **Add Printer Wizard** asks you to select the printer port, select **Create a new port**. In the Type: menu, select **Standard TCP/IP Port**, then click **Next**. This will open the **Add Standard TCP/IP Printer Port Wizard**. Click **Next**.
10. Enter the IP address of the printer. Click **Next**.
11. Select **Custom**, then click on **Settings...**
12. in the **Protocol** box, select **LPR**. In the **LPR Settings** box, type **print** for **Queue Name**:, then click **OK**.
13. Click **Next**. Click **Finish** to return to the **Add Printer Wizard**.
14. If the printer driver was previously loaded on the PWS, select the printer from the list and click **Next**. Otherwise, click **Have Disk**. Print Drivers can be found on the customer's User Software CD. The drivers can be downloaded from the Controller via Web Tools. The latest driver can also be downloaded from the Xerox Website. Navigate to the CD or downloaded driver for your PWS' operating system. Click **OK**.
15. On the **Name Your Printer** screen, enter a name for the printer. Do not set this printer as the default. Click **Next**.
16. Select **Do not share...**

17. Select **Yes** when asked if you want to print a test page. Correct printing indicates a functioning network connection.

Using the Simulator

To use this simulator tool on different machines, modify the Setup as follows:

1. Print a new **System Settings List** (Configuration Report). Refer to GP 6.
2. Reconfigure the PWS IP Address per step 2 in **Setup**.
3. Click the Windows **Start** button.
4. Select **Settings**, then **Printers and Faxes**.
5. Right-click on the name of the test printer you created, and select **Properties**
6. Select the **Ports** tab, then click on **Configure Port...**
7. Enter the printer's IP address then click on **OK**.

GP 9 Installing System Software

Purpose

This procedure explains the process needed to Upgrade, Downgrade or Reload System Software.

Procedure

Determine the appropriate System Software loading method by selecting the Device(s) that require Software and the type of Software loading that is required (Upgrade, Downgrade or

Table 1 Software Loading

Software Platform	Procedure	Network Controller	Copy Controller	Scanner		Marking Engine	Finisher
Platform Components	**Overview**		**XUI-Copy Controller-Fax**	**IIT Apps**	**DADH**	**IOT**	
Normal USB Upgrade - Recommended CSE method	Place DLM file into **Upgrade** folder on a USB drive. Insert after the Machine is fully booted. ***NOTE:*** *Machine must be Online and the USB port must be enabled.*	Upgrade	Upgrade	Upgrade	N/A	Upgrade	N/A
Customer Manual Upgrade via CWIS	DLM file is loaded through CWIS Properties -> General Setup -> Machine Software -> Manual Upgrade. ***NOTE:*** *Machine must be online.*	Upgrade	Upgrade	Upgrade	N/A	Upgrade	N/A
Customer Automatic FTP Upgrade	DLM file is placed on an FTP server and CWIS is configured Properties -> General Setup -> Machine Software ->Auto Upgraded to periodically check the FTP site for updated Software.	Upgrade	Upgrade	Upgrade	N/A	Upgrade	N/A
Automatic Power On Software Upgrade (POSU)	At every power on, they system automatically checks the current version of components and compares with the copy retained on the network controller. Supported platforms will be upgraded / downgraded if a mismatch exists. ***NOTE:*** *Machine must be online.* ***NOTE:*** *Auto power on upgrade will not occur if install phase (616-14) is set to manufacturing (0) or customer install (2)*	N/A	Upgrade, Downgrade	Upgrade, Downgrade	N/A	Upgrade	N/A
Regular AltBoot	DLM file placed in "Altboot" folder on a USB drive and inserted prior to powering on the machine. ***NOTE:*** *Data loss will occur. Make a clone file prior to upgrading and restore it when completed (GP 13).* ***NOTE:*** *USB Ports must be Enabled.*	Upgrade, Downgrade, Reload	Upgrade, Downgrade, Reload	After AltBoot POSU may occur	N/A	After AltBoot POSU may occur	N/A

Table 1 Software Loading

Software Platform	Procedure	Network Controller	Copy Controller	Scanner		Marking Engine	Finisher
Platform Components	**Overview**		**XUI-Copy Controller-Fax**	**IIT Apps**	**DADH**	**IOT**	
Forced AltBoot / Failed Upgrade	DLM file placed in Altboot folder on a USB drive, along with a file called **FORCED_UPGRADE** (case sensitive with no file extension) and inserted prior to powering on the machine ***NOTE:*** *Data loss will occur. Make a clone file prior to upgrading and restore it when completed (GP 13).* ***NOTE:*** *Adding a file called **DISABLE_DATA_BACKUP** (case sensitive with no file extension) will prevent the NC from keeping data that is normally retained through an AltBoot.* ***NOTE:*** *USB Ports must be Enabled.* ***NOTE:*** *High speed or low speed IOT file selection is automatic and based on detection signal from the scanner. To override the automatic selection, **FORCE_IOT_HIGH** file can be used to force loading of High Speed IOT SW (7545, 7556) and **FORCE_IOT_LOW** file can be used to force loading of Low Speed IOT SW (7525, 7530, 7535)*	Upgrade, Downgrade, Reload	Upgrade, Downgrade, Reload	Upgrade, Downgrade, Reload	Upgrade, Downgrade, Reload. May require manual NVM changes	Upgrade, Downgrade, Reload	Upgrade, Downgrade, Reload. **CAUTION** *After performing a SW **upgrade only** you must initialize Finisher NVM. For the Professional Finisher, you must re-enter Punch Type and Booklet Detect NVM values manually.*
PWS AltBoot	PWS Laptop along with AltBoot Software tool is used to load machine software	Upgrade, Downgrade, Reload	Upgrade, Downgrade, Reload	After AltBoot POSU may occur	N/A	After AltBoot POSU may occur	N/A

Select from the following:

- Normal USB Upgrade
- Regular / Forced AltBoot
- PWS AltBoot GP 15

Normal USB Upgrade

NOTE: *Machine must be Online and the USB port must be enabled. The System Administrator should be able to determine which USB ports are enabled.*

Procedure

Obtaining Software

System software is available in GSN library #11428 or www.Xerox.com. To load SW onto the USB Flash Drive perform the following:

1. Connect the Flash Drive to a USB port on your PWS.

NOTE: *You should not have an **upgrade** folder and an **altboot** folder in the root of the Flash Drive at the same time.*

2. Create a folder named **upgrade** at the root level of the Flash Drive.

3. Navigate to the root directory of the Flash Drive.

NOTE: *If you have more than one file with the suffix* ***.dlm*** *inside the* ***upgrade*** *folder on the Flash Drive, the latest version will be automatically selected.*

4. Locate the **Machine SW** folder. Inside the folder will be a file with the name **WorkCentre_7500-system-sw#061120000*****# .dlm**, where ***** is the version number of the software. Copy this file to the **upgrade** folder on the USB Flash Drive.
5. Remove the Flash Drive from your PWS.

Loading Software

1. Switch on the machine power and wait for the machine to boot up.
2. Perform an NVM Save, dC361.
3. Perform the Network Clone procedure, GP 13.
4. If possible, complete or delete all pending print jobs. If the prints jobs cannot be deleted, warn the customer that all pending jobs will be lost.
5. Before software is loaded, ensure that the machine is in a fully operational condition. Any active faults or jams must be resolved before starting this procedure
6. Connect the USB Flash Drive to one of the USB Ports on the Control Unit (Figure 1).

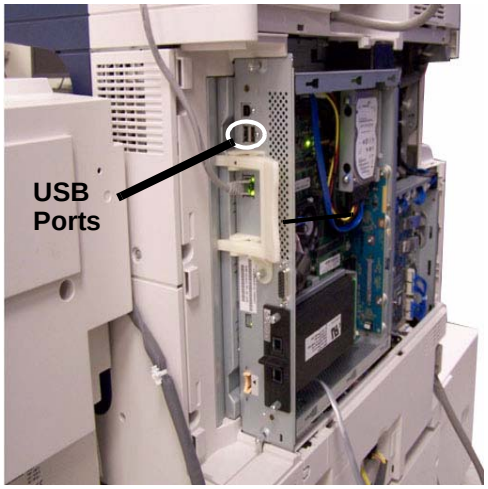

Figure 1 USB Ports

CAUTION

It may take several minutes for the upgrade to start. There is ***NO*** *indication until the UI displays the* ***Software Upgrade*** *screen.* ***DO NOT*** *remove the Flash Drive or switch off the power until the machine reboots.*

7. It may take several minutes for the upgrade to start. The UI displays the **Software Upgrade** screen. Progress bars for each of the software modules will be displayed.
8. The upgrade process may take up to 15 minutes to complete. after the upgrade is loaded, the machine will reboot. When the reboot is complete, remove the Flash Drive.
9. Print a Configuration Report and verify that the expected software levels are present.

If the procedure is not successful . . .

Listed below are possible problems that may stop software loading:

- Incompatible USB flash drive or inactive USB port:

  If the activity light on the USB Flash Drive never lights or flashes, the customer may have disabled the USB ports. Log into the machine's web page, select Properties tab, Security heading, and then click on USB Port Security and ensure that the USB ports are checked and enabled.

  If the machine's web page cannot be accessed, use the PWS Altboot procedure (GP 15).
- Corrupt .dlm file.
- Incorrectly named upgrade directory on USB flash drive.
- HDD corruption or failure.
- USB port damage
- UI failure
- SBC PWB failure
- +5V supply to the USB ports

Regular / Forced AltBoot

NOTE: *Machine must be Online and the USB port must be enabled. The System Administrator should be able to determine which USB ports are enabled.*

AltBoot should be only be used under the following circumstances:

- To attempt to reinstall corrupt software
- After replacing a HDD
- To upgrade machine software without running multiple software upgrades.
- To downgrade machine software.
- To install finisher software

There are two types of AltBoot; Regular and Forced:

- A **Regular AltBoot** is what the CSE should use to recover from problems with the SBC board (e.g. Disk corruption, general issues). It will upgrade all software on the SBC board regardless of whether it needs it. Any other peripheral devices that need an upgrade will be handled by the Power On Upgrade feature after the AltBoot is complete and the machine has rebooted.
  - Finishers and IIT/IPS cannot be reloaded, upgraded, or downgraded using this method.
  - The IOT cannot be reloaded or downgraded using this feature.
  - A Regular AltBoot takes approximately 5-10 minutes.

CAUTION

The Forced AltBoot feature should be used with extreme caution as it will replace bootcode as well as application code. Power Failure during a Forced Altboot while programming bootcode may result in certain PWBs (DUI, Finisher) not being recoverable.

- A **Forced Altboot** will upgrade or downgrade every component on the entire machine regardless of the currently-installed software version. A Forced Altboot is required for recovering from corrupt application code on devices such as Fax, IOT, IIT.
  - A Forced Altboot should be used if the Finisher software requires upgrade or reloading.

– After performing a Finisher SW **upgrade only** you must initialize Finisher NVM. For the Professional Finisher, you must re-enter Punch Type and Booklet Detect NVM values manually.
– A Forced Altboot should be used if a downgrade of the IOT/IIT is required.
– Performing a Forced Altboot may take up to 25 minutes to complete.

Procedure

Obtaining Software

System software is available in GSN library #11428 or www.Xerox.com. To load SW onto the USB Flash Drive perform the following:

1. Connect the Flash Drive to a USB port on your PWS.

NOTE: *You should not have an **upgrade** folder and an **altboot** folder on the Flash Drive at the same time.*

2. Create a folder named **altboot** at the root level of the drive.
3. **Forced AltBoot only:** Create a file named **FORCED_UPGRADE** inside the **altboot** folder. This is an empty file and **must not** have an extension; the AltBoot routine only checks to see that a file with this name is present. To create the empty file, do the following:
   - Open the altboot folder
   - In a blank area of the screen, right click and select “New”.
   - Select “Text Document”.
   - The name “New Text Document.txt” will be highlighted.
   - Type “FORCED_UPGRADE” and hit “Enter”.
   - A pop-up with the message “If you change a file name extension, the file might become unusable. Are you sure you want to change it?” will appear.
   - Click on ”Yes”.

   To eliminate the carryover of corrupt data, create a file called **DISABLE_DATA_BACKUP** (case sensitive with no file extension). This will prevent the NC from keeping data that is normally retained through an AltBoot.
4. Navigate to the root directory of the Flash Drive.

NOTE: *If you have more than one file with the suffix **.dlm** inside the **altboot** folder on the Flash Drive, the latest version will be automatically selected.*

5. Locate the **Machine SW** folder. Inside the folder will be a file with the name **WorkCentre_7500-system-sw#061120000*****# .dlm**, where ***** is the version number of the software. Copy this file to the **altboot** folder on the USB Flash Drive
6. Remove the Flash Drive from your PWS.

Loading Software

1. Switch on the machine power and wait for the machine to boot up.
2. Perform an NVM Save, dC361.
3. Perform the Network Clone procedure, GP 13.
4. If possible, complete or delete all pending print jobs. If the prints jobs cannot be deleted, warn the customer that all pending jobs will be lost.
5. Before software is loaded, ensure that the machine is in a fully operational condition. Any active faults or jams must be resolved before starting this procedure.
6. Switch off the machine
7. Connect the USB Flash Drive to one of the USB Ports on the Control Unit (Figure 2).

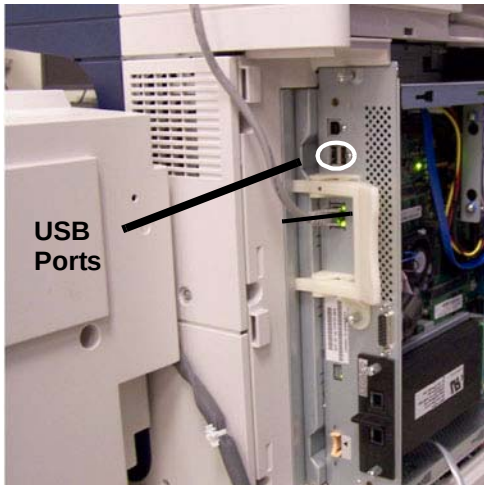

Figure 2 USB Ports

8. Switch on the machine power.
9. The UI will display the **Software Upgrade** screen. Progress bars for each of the software modules will be displayed.
10. The AltBoot process should complete after approximately 5 minutes. When finished, the UI will display **Upgrade Complete. Remove USB Drive and press “0” in UI**. Make sure to remove the Flash Drive before hitting “0” or the machine will restart the upgrade.
11. If the AltBoot process fails, the **AltBoot failed** screen will open. Follow the on screen instructions. Restart the procedure.

    NOTE: *Do not switch off the machine until told to do so by the UI. During the next few steps, the HDD is being encrypted. Switching off the machine can cause only partial encryption of the partitions on the HDD.*

12. The UI displays the **Data Encryption/Decryption** screen after the data encryption is complete. This takes about 5 minutes. If there is a problem during encryption, a reset machine screen will be displayed. Do not power off unless the “RESET MACHINE” screen is displayed. In this case, power off then on and check software levels. If software is not correct then start over.
13. The machine will reboot several times before returning to a ready state. In some instances a power on failure screen may appear. Switch off the machine, then switch on the machine.
14. Perform an NVM Restore, dC361.
15. Perform a Network Clone Restore (GP 13).

If the procedure is not successful . . .

Listed below are possible problems that may stop AltBoot software loading:

- Incompatible USB flash drive.
- Corrupt .dlm file.

- Incorrectly named upgrade directory on USB flash drive.
- HDD corruption or failure.
- USB port damage
- UI failure
- SBC PWB failure
- +5V supply to the USB ports

GP 10 HyperTerminal Setup for Controller Communication

Purpose

This procedure allows you to connect your PWS directly to the CCS communication port on the SBC.

Procedure

To configure your PWS for a HyperTerminal connection, perform the following:

1. In the Task bar at the bottom left of your PWS, select **Start**.
2. Select **All Programs**.
3. Select **Accessories**.
4. Select **Communications**.
5. Select **HyperTerminal**.
6. If a **Default Telnet Program?** dialog box appears, select **No**.
7. When the **Connection Description** dialog box appears, enter **SBC** in the **Name** space.
8. In the **Connect To** dialog box, select **COM1** in the **Connect using:** pull-down
9. Ensure that the following are set in the **COM1 Properties/Port Settings** window:
    - **Bits per second**: = 115200
    - **Data bits:** = 8
    - **Parity:** = None
    - **Stop bits:** = 1
    - **Flow Control:** = None
10. Select **Apply**, then select **OK**.

GP 11 Resetting the System Administrator Password

When a customer requires a new Administrator Password, the customer will need to call the Welcome Center and request an Administrator Password Reset.

1. The Welcome Center will request the machine serial number and current copy count.
2. The Welcome Center will generate a 12 digit Reset number.
3. The customer will enter the Reset number on the machine control panel after entering a three key combination;(* 0 C). The Administrator password and login will reset to the default values (**admin** and **1111**)
4. If Password reset has been disabled in CWIS, the password can only be reset by a CSE arriving onsite and performing a **Regular AltBoot** (GP 9).

GP 13 Cloning Network Configurations

Purpose

This procedure is designed to be used by System Administrators to copy Network Configuration settings to multiple devices on the network such as **Scan to File** and/or **Scan to E-mail** configuration settings. It can also be used to backup and restore Network Controller settings that are lost during an Altboot software load.

Proxy Server Setting

The following steps will ensure that the Proxy Server Settings are correct.

1. Open **Windows Internet Explorer.**
2. Select **Tools - Internet Options**.
3. Select the **Connections** Tab.
4. Select the **LAN Settings** box.
5. Ensure that the “Use a proxy server for your LAN” box is **un-checked**.
6. Select **OK** to close the **Local Area Network Settings** window.
7. Select **OK** to close the **Internet Options window**.
8. Close **Windows Internet Explore**r.

Establishing a LAN connection

The following steps establish a correctly configured Local Area Network (LAN) connection so that the PWS can communicate with the Network Controller. Once the settings are established they will remain in effect until changed.

NOTE: *Record the original data for every place you make a change. You may or may not need to reset the IP address, depending on PWS usage and local network practice*

1. Record any selections that you change, so that you can restore your original configuration when finished.
2. Print a Configuration Report (GP 6).
3. Right click on the **My Network Places** icon.
4. Select **Properties** to bring up the Network and Dial-up Connections window.
5. Right click on **Local Area Connection** and select **Properties**.
6. Select the **General** tab and scroll down to Internet Protocol (TCP/IP). Highlight **TCP/IP** and select **Properties**.
7. Select the **Use the following IP address** radio button.
8. Enter an **IP address** one digit different than the machine IP address listed on the Configuration Report for example, if the machine IP address is 12.138.147.44, enter 12.138.147.45 or 12.138.147.43).
9. Enter 255.255.255.0 for **Subnet mask**.
10. Select **OK** to close the **TCP/IP Properties** window
11. Select **OK** to close the **Local Area Connection Properties** window.
12. You may need to reboot the PWS to load the settings.

Connecting to the machine

1. Connect the Crossover Cable between the PWS and the SBC.
2. Open Internet Explorer
3. Enter the machine’s IP address in the **Address** line and select **Go**.

4. When the **Centreware® Internet Services** window opens, select the **Properties** Tab. Click on the **General Setup** link, then the **Cloning** link (Figure 1).

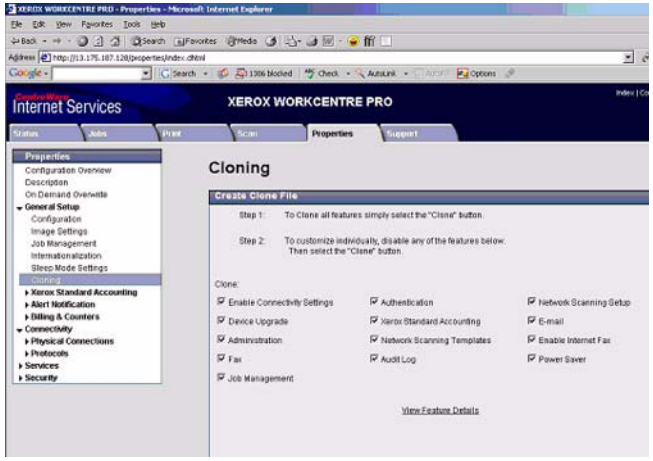

Figure 1 Cloning Screen

5. Scroll down the page to see critical information about the cloning process (Figure 2). Click the **View Feature Details** link to get a list of data that is backed up and/or restored using the Cloning Feature.

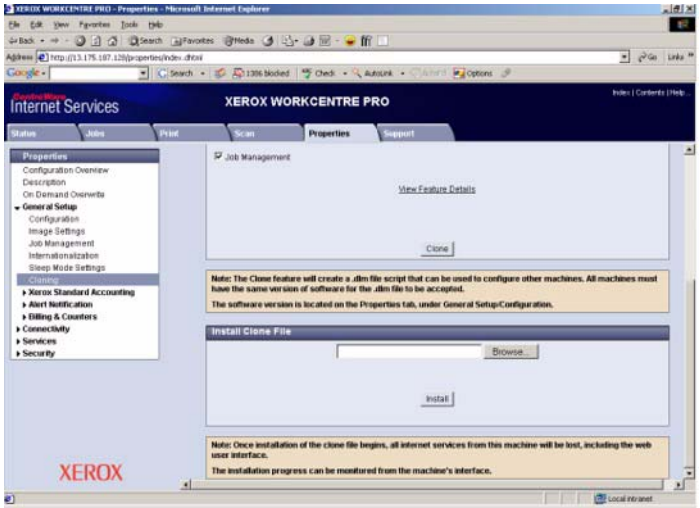

Figure 2 Important Notes!

Saving settings to a Clone file

1. Select the **Clone** button under the **View Feature Details** link (Figure 1).

NOTE: *If the customer has enabled Administrator Password, you will be asked for a user name and password. Defaults are* ***admin*** *as the user name, and* ***1111*** *for the password.*

CAUTION

Do NOT attempt to open the clone file as it may cause the file to become corrupt.

2. Right click on **Cloning.dlm** to save the clone file (Figure 3).

NOTE: *When the file is saved, a .txt extension may automatically be placed at the end of the file name. Before loading this clone file, navigate to the saved file, right-click on the file and select* ***Rename****. The correct format for the file name is xxxxxxxx.dlm.*

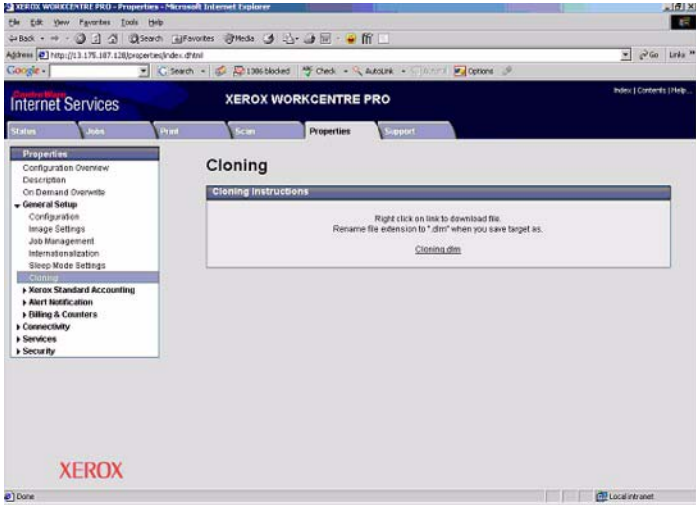

Figure 3 Saving the Clone File

Using the Clone file

NOTE: *This procedure can be done from ANY PC connected to the network or the PWS connected to the machine using an Ethernet crossover cable. The only requirement on the PC is an Internet Browser.*

1. Open Internet Explorer
2. Enter the machine's IP address in the **Address** line and select **Go**.
3. When the **Centreware® Internet Services** window opens, select the **Properties** Tab. Click on the **General Settings** link, then the **Cloning** link (Figure 1).
4. Scroll to the bottom of the page (Figure 2).
5. Use the **Browse** button to navigate to the clone file, or type the full path to the file.

   Click the **Install** button. If the machine does not reboot after five minutes, power the machine off/on.
6. Verify the cloned settings with a new Configuration Report.

GP 14 External Fax Line Test

When the customer reports a fax issue sometimes it is very difficult to determine if the problem is with the customers phone line or the Xerox machine.

The preferred method of verifying the phone line functionality is to use the Modem saver device part number 600T2133 to ensure the fax line is wired correctly and to use the Analog hand set part number 600T1937 or customer's analog phone to place calls on the line. Be sure that both local and long distance calls can be placed and the line quality is clear, no static.

Use Handset:

- Can it dial externally on the line?
- Can it receive a call on the line?
- Evaluate Line quality. Check Line for unwanted beeps, or noise.

Use Breakout Box to measure voltages (Use the machine chassis as ground). Refer to Fax 101 training for Breakout Box usage instruction:

- Check ground continuity .
- Line Voltage -20 to -50 VDC?
- Loop Current 15 to 95 mA DC?
- Ring Signal 50 to 90 VAC?
- Check Ring-Ground and Tip-Ground <1VAC

If a line quality issue or incorrect voltage is found then the customer will need to resolve these problems.

GP 15 PWS AltBoot

Purpose

PWS AltBoot is a tool that is used to load machine software in those accounts that do not permit the use of USB Flash Drive devices. The PWS AltBoot tool and installation instructions can be downloaded from GSN library # 11428.

Initial Actions

1. Perform an NVM Save, dC361.
2. Perform the Network Clone procedure, GP 13.
3. If possible, complete or delete all pending print jobs. If the prints jobs cannot be deleted, warn the customer that all pending jobs will be lost.
4. Before software is loaded, ensure that the machine is in a fully operational condition. Any active faults or jams must be resolved before starting this procedure.
5. Switch off the machine

Procedure

Installing the tool

Follow the instructions in the GSN library. Make sure to copy over the SW (.DLM) files and the uImage and uboot files.

Establishing a LAN connection

The following steps establish a correctly configured Local Area Network (LAN) connection so that the PWS can communicate with the Network Controller. Once the settings are established they will remain in effect until changed.

NOTE: *Record the original data for every place you make a change. You may or may not need to reset the IP address, depending on PWS usage and local network practice*

1. Record any selections that you change, so that you can restore your original configuration when finished.
2. Print a Configuration Report (GP 6).
3. Right click on the **My Network Places** icon.
4. Select **Properties** to bring up the Network and Dial-up Connections window.
5. Right click on **Local Area Connection** and select **Properties**.
6. Select the **General** tab and scroll down to Internet Protocol (TCP/IP). Highlight **TCP/IP** and select **Properties**.
7. Select the **Use the following IP address** radio button.
8. Enter an **IP address** one digit different than the machine IP address listed on the Configuration Report for example, if the machine IP address is 12.138.147.44, enter 12.138.147.45 or 12.138.147.43).
9. Enter 255.255.255.0 for **Subnet mask**.
10. Select **OK** to close the **TCP/IP Properties** window
11. Select **OK** to close the **Local Area Connection Properties** window.
12. You may need to reboot the PWS to load the settings.

Connecting the PWS to the machine

1. Connect the Communication Data Cable to the RJ11 connector (P/J19) on the SBC PWB. Connect the other end to the serial port on your PWS.

2. Disconnect the customer's network connection. Connect a crossover cable between the network port on the machine and the network port on the PWS.

Performing an AltBoot

1. Start the PWS AltBoot tool.
2. A **Browse for Folder** window will open. Browse to and highlight the folder that contains the upgrade files. Select **OK**.
3. Switch on the machine. After approximately 10 seconds, the transfer of the uImage and uboot files will begin.
4. After file transfer, the settings menu is displayed in the terminal window. Check that the 'Received packet' line is displayed and that the IP address is set one digit away from the packet was received from address.

   Press **y** at the prompt and continue. If the valid netmask is not set, press **n** and change it to 255.255.255.0
5. From the next menu, select **5> Install ESS software**.
6. At the **Proceed?** prompt, select **Y**.
7. At the second **Proceed?** prompt, select **Y**.
8. From the next menu, select **4> Continue**.
9. A list will display the .DLM file(s) in the directory identified in step 2. Select the correct DLM file to download to the machine. A transfer progress window will then open.
10. After the DLM file has been downloaded to the machine, the **Software Upgrade** start screen will display on the UI.
11. After approximately 1 minute the upgrade will begin and the **Software Upgrade in progress** screen will open. If the upgrade process screen is not displayed after 2 minutes, restart the process.
12. The AltBoot process should complete after approximately 5 minutes and the **Upgrade Complete** screen will open. Ignore the instruction to remove the USB flash drive, only press **0** to continue.
13. The machine will reboot several times before returning to a ready state. During the reboot, the hard disk drive is encrypted. Switching off the machine can cause only partial encryption of the hard disks partitions. The AltBoot process may need to be re-run if power is removed at this step. The UI displays the **Data Encryption/Decryption in Progress** screen.
14. After the reboots have finished the machine will boot up and come online. In the SBC-AlternateBoot window on the PWS should display the following message:

    ****

    ********** ESS System is 'OPERATIONAL' **********

    ****
15. Disconnect the cable from the PWS serial port and the machine. Disconnect the crossover cable from the PWS network and the machine.
16. Connect the customer's network cable to the machine.
17. Check that the software set has been installed. Refer to the printed software upgrade report or by pressing the machine status button.
18. Perform an NVM Restore, dC361.
19. Perform a Network Clone Restore (GP 13).

GP 16 Toner CRUM Conversion

Purpose

This procedure explains how to set the Geographic Differentiation Code and Toner Cartridge Type to the correct values.

Introduction

The WC 7556F machines are shipped with "Worldwide Neutral" Toner Cartridges. When the cartridges shipped with the machine are installed, the machine is set to Worldwide Neutral configuration. When the first toner cartridge (any color) is replaced, the Geographic Differentiation Code and Toner Cartridge Type in NVM are automatically changed to the same settings as the replacement cartridge. Once these NVM are set, the toner configuration can only be changed with a CRUM conversion.

There are three types of toner: Metered Service, which is a single part number world wide, Sold toner that is specific to the DMO/XING market, and Sold toner that is specific to US/XCL/XE market. See CRUs and Consumables for part numbers. If a toner cartridge of the wrong type (i.e., a "sold" cartridge in a "metered" configured machine) is installed, it will generate a fault code and/or a message on the UI indicating toner incompatibility.

If the problem occurs after several toner replacements, the customer may have received the wrong toner in a consumables order; either because the wrong part number was ordered, or the shipment did not match the order. Resolution in this case is simple; the customer should exchange the toner for the correct part.

If the wrong toner was installed at the first toner replacement after install, or if the configuration NVM have changed due to software or NVM corruption, perform the following procedure:

Procedure (Non-Page Pack)

1. Record the machine serial number and the number of **Total Impressions**
2. Call Field Engineering or your NTS and provide the information collected in step 1.
3. You will be given a 6-character passcode.
4. Press the **Machine Status** button on the Control Panel.
5. Select the **Tools** tab. The Tools menu will be displayed.

   On the left side of the screen are several buttons for the categories of features.

   Within each category are **Groups** of features. Each **Group** contains one or more **Features**.
6. Select the **Device Settings** category, then the **Supplies** group, then select **Enter Supplies Activation Code**.

NOTE: *The passcode must be entered within 500 page counts of when it was issued, or it will not be valid.*

7. Enter the passcode string provided in Step 4. If the Passcode contains a special character, the level of software installed on the machine may not allow entry of this character because it is grayed out. Use the following procedure to enter the special character.
   a. Log into Tools
   b. In the Features column, select [General...]
   c. Select [Custom Keyboard Button...]

d. The 3rd button on the bottom row is the customizable button
e. Select [Clear Text]
f. Select [Shift]
g. Select the special character contained in the Passcode
h. Select [Save]
i. Log out of Tools

8. The Geographic Differentiation Code and Toner Cartridge Type will be reset to the values of the customer's agreed-to supplies plan.

Procedure (Page Pack)

1. Before a 4000 page count is reached, a PIN number must be entered, otherwise the machine will not operate after the 4000 page limit.
2. If a bad PIN is entered 3 times consecutively, you must wait 24 hours before a good PIN can be entered.

GP 18 Restoring the Public Address Book

The Public Address Book is not included in the clone file. In order to properly import public address books (.csv format), HTTPS (SSL) must be enabled via Centreware® Internet Services. This is a customer task; however, the customer may request assistance.

Procedure

The procedure to restore the Public Address Book follows:

Create a self-signed Digital Certificate:

1. On your Internet browser, enter the IP Address of your WorkCentre
2. On the **Centreware® Internet Services** window, select the **Properties** tab
3. Login if prompted (default = admin / 1111)
4. In the Properties pane on the left side of the window, select **Security**, then **Machine Digital Certificate Management**.
5. Select **Create New Certificate**.
6. Choose **Self Signed Certificate**, then select **Continue**.
7. Enter the appropriate information on the Certificate form and select **Apply**.

Enable HTTPS:

1. On the **Centreware® Internet Services Properties** pane, select **Connectivity**, then **Protocols**, then **HTTP**.
2. Under **Secure HTTP (SSL):** select the **Enabled** radio button then select **Apply**. A Public Address book in .csv format can now be imported to the machine.

Import the Public Address Book:

1. On the **Centreware® Internet Services Properties** pane, select **Services**, then **E-mail**, then **Public Address Book**.
2. Select the **Browse** button and locate the .csv file to be imported.
3. Select the **Import Now** button.
4. On the next screen, choose the columns from the .csv file to be used as the Display Names and E-mail Addresses, and select **Apply**.

GP 20 Reporting Billing Meter Resets

Procedure

The CSE is required to call in billing meter reads to one of these Customer Business Centers when a machine's meters have been reset:

- Chicago CBC: 1-888-771-5225 (7am - 7pm Central Time). Choose Option 4 - (All other administrative Inquiries).
- St. Petersburg CBC: 1-888-435-6333 (8am - 8pm Eastern Standard Time). Choose Option 4 - (If you have questions regarding your Invoice or account.)
- Dallas CBC: 1-888-339-7887 (7am - 6pm Central Time). Choose Option 4 - (If you have questions regarding your Invoice or account.)

The Customer Business Centers will need the following information:

- CSE/Analyst/Service Agent Name and Employee Number
- 9 Digit Equipment Serial Number
- Old Meter Read and Date
- New Meter Read and Date

GP 22 Foreign Device Interface Setup

Purpose

This procedure explains the process for troubleshooting, installing and configuring the Foreign Device Interface (FDI).

Procedure

1. The FDI Kit has been installed, but the Configuration sheet indicates that the Foreign Interface Board is not present. Go to Configuring the Foreign Device Interface.
2. The External Device does not enable the machine or does not count. Use the Foreign Interface and External Device Test Tool to resolve the problem.
3. Directions for the Foreign Device Test Tool are not packaged with the tool. Go to Foreign Device Test Tool.

Installation

Prerequisites: FDI Interface Kit.

NOTE: *This is a purchased item and must be ordered through Sales.*

NOTE: *Observe all Electrostatic Discharge (ESD) precautions when performing this procedure.*

1. Switch off the printer power. Disconnect the power cord.
2. Remove the Control Unit.
3. Remove the FDI Harness Connector Cutout Cover from the Control Unit (Figure 1)
4. Remove the two (2) standoffs from the FDI Connector, then using the Standoffs, secure the FDI Connector to the Control Unit. Figure 2.
5. Plug the Harness into the FDI PWB then mount the FDI PWB onto P/J20 of the SBC PWB.

   NOTE: *It is possible to connect the Foreign Interface Cable in reverse on the FDI PWB. Orient the cable properly.*

6. Replace the Control Unit and Power On the Machine.

Configuring the Foreign Device Interface

1. Press the Log In/Out button.
2. Log into the machine as admin, with default password of 1111.
3. Touch [Machine Status], then from Tools, press the Accounting Settings button.
4. Press Accounting Mode
5. Press Auxiliary Access and select one of Auxiliary Device Type buttons available to configure the device and Select Save.
6. From the Auxiliary Device Configuration menu, Select Service Access & Accounting and Select those Services that will be restricted by the auxiliary device. A check mark in the box will indicate those services which will be restricted, Select Save.

   NOTE: *If no selections are made, the Foreign Interface board will indicate "not present" on the configuration report.*

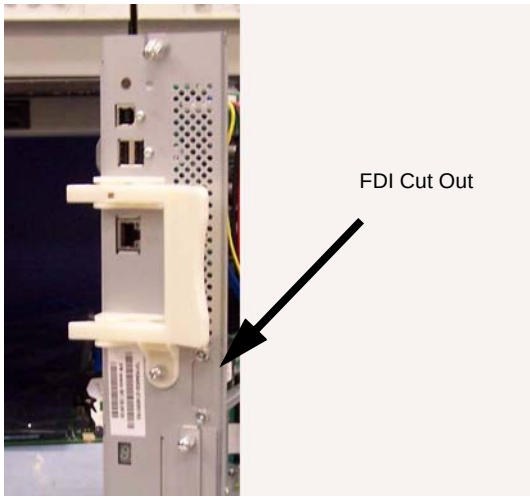

Figure 1 FDI Cut Out Cover

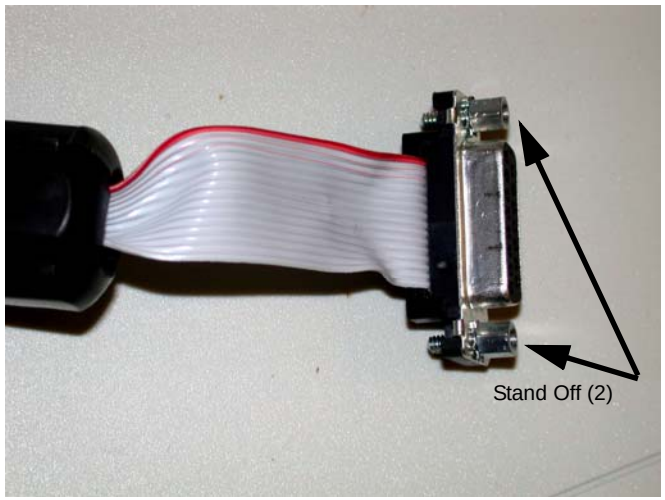

Figure 2 Connector Standoff

GP 23 Intermittent or Noise Problem RAP

Purpose

The purpose of this RAP is to provide guidance for resolving an intermittent or noise problem. This is not an exact procedure, but a set of recommended actions that use the resources of the service manual to help locate the cause of an intermittent or noise problem.

Procedure

1. Check the service log. Recent service actions may provide information about the problem. For example, a component that was recently replaced to correct another problem may be the cause of the new intermittent problem.
2. Noise problems may be due to improper installation. Check for packing materials that have not been removed. Check for loose or missing hardware.
3. Run the machine in a mode that vigorously exercises the function that is suspected. The machine may fail more frequently or may fail completely under these conditions. Look for signs of failure or abnormal operation.

   An intermittent problem can usually be associated with a RAP, since when it does fail, it results in a fault code, a jam code, or some other observable symptom.
4. Using the RAP that is associated with the symptom of the intermittent problem, examine all of the components that are referenced in the RAP. Look for:
   - contamination, such as a feed roller that has a build up of dirt or toner
   - wear, such as gear teeth that are rounded or have excessive backlash
   - HFSI, even if they are not near or have not exceeded the SPEC LIFE or COPY COUNT value
   - wires chafing against components of the machine, especially against moving components
   - misaligned, mis-adjusted, or incorrectly installed components
   - slow or slipping clutches; slow or binding solenoids
   - damaged components
   - excessive heat, or symptoms of excessive heat, such as the discoloration of a component
   - loose cables or wires
5. Using the RAP that is associated with the symptom of the intermittent problem, perform all of the adjustments for the components or functions that are referenced in the RAP. Check to ensure that the adjustment can be made and that there is an adequate range of adjustment, and that it can be set to or near the nominal value. Any abnormality that is observed may be an indication of the cause of the problem. For example, a component can be adjusted to the nominal value, but it is at the limit of the adjustment range. This is not normal and may be an indication of the cause of the problem.
6. Operate all of the components in the appropriate RAP that is associated with the symptom of the intermittent problem with Component Control. Observe the components for any symptoms of abnormal operation, such as a hesitation, or an unusual sound.
7. Check that the AC and DC power are within specification.
8. Get technical advice or assistance when it is appropriate. This will depend upon the situation and the established local procedures.
9. Examine the components that are not in the RAP, but are associated with the function that is failing. Refer to the BSDs. Look for:

- contamination, such as a feed roller that has a build up of dirt or toner
- wear, such as gear teeth that are rounded or have excessive backlash
- HFSI, even if they are not near or have not exceeded the SPEC LIFE or COPY COUNT value
- wires chafing against components of the machine, especially against moving components
- misaligned, mis-adjusted, or incorrectly installed components
- slow or slipping clutches; slow or binding solenoids
- damaged components
- excessive heat, or symptoms of excessive heat, such as the discoloration of a component
- loose cables or wires

10. Perform the adjustments for the components that are not in the RAP, but are associated with the function that is failing. Refer to the BSDs. Check to ensure that the adjustment CAN BE MADE and that there is an adequate range of adjustment, and that it can be set to or near the nominal value. Any abnormality that is observed may be an indication of the cause of the problem. For example, a component can be adjusted to the nominal value, but it is at the limit of the adjustment range. This is not normal and may be an indication of the cause of the problem
11. Operate all of the components that are not in the RAP, but are associated with the function that is failing with Component Control. Refer to the BSDs. Observe the components for any symptoms of abnormal operation, such as a hesitation, or an unusual sound.
12. Replace any components or consumables that are known to be a frequent cause of the problem. When doing this, consider the cost and time required. If the suspected item is inexpensive, can be installed quickly, and has a high probability of resolving the problem, then it is reasonable to replace it.
13. Leave an accurate and detailed record of your actions in the service log. Describe what you have observed, what actions you took, and the recommended next steps.

GP 24 How to turn off the Power Saver Functions

The following procedure is to be used to disable the power saver and/or Low Power Mode per customer request or for testing purposes.

Procedure

NOTE: *Both the Engine and the Network Controller must be disabled.*

1. To disable the Engine, perform the following:
   a. Enter NVM Read/Write in the UI diagnostics and change the following locations from 1 (enabled) to 0 (disabled):
      616-002 Low Power Enabled
      616-008 Power Off Enabled
   b. Exit diagnostics and power off then power on
2. To disable the Network Controller, perform the following:
   a. Log into the webpage as Administrator and uncheck the box shown in the attachment
   b. Select Apply then log out

Space Requirements

The dimensions shown below provide the overall service space required, including the space to the nearest obstruction. The dimensions reflect both typical and hallway installations and are absolute minimums. See Figure 1/Table 1.

NOTE: *Carpeted flooring surfaces may require the installation of a mobility plate on the IOT and Finishers to allow the product to be moved during normal maintenance activities.*

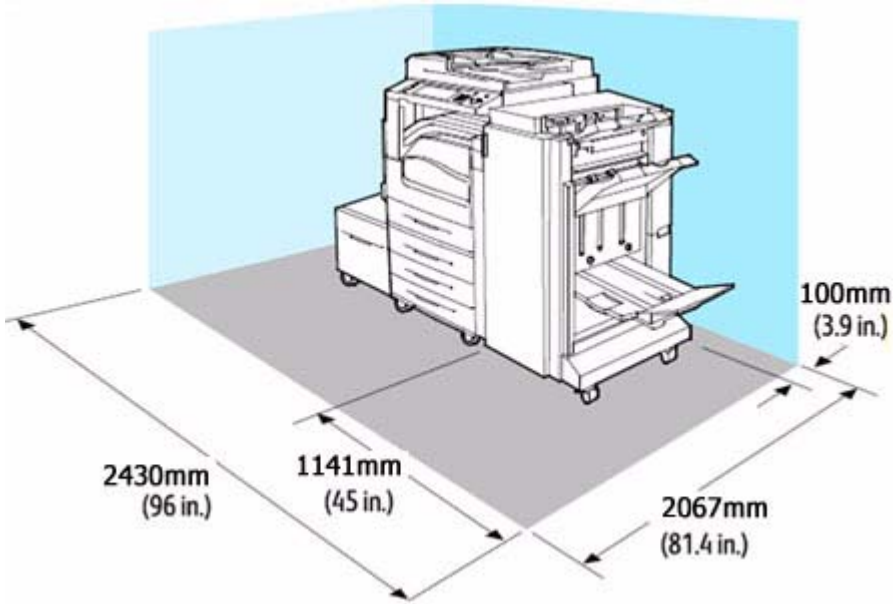

Figure 1 Space Requirements

Table 1 Space Requirements

Configuration	Width (mm)	Depth (mm)	Height (mm)	Installation Space
Base Config + Tray Module (TM)	41.9 in/ 1064 mm	27.0 in/ 685 mm	44.4 in/ 1127 mm	61.2" x 81.4" 1554 x 2067
Base Config + TM + Integrated Finisher	44.4 in/ 1129 mm	27.0 in/ 685 mm	44.4 in/ 1127 mm	61.2" x 81.4" 1554x 2067
Base Config + TM + Office Finisher LX	65.6 in/ 1666 mm	27.0 in/ 685 mm	44.4 in/ 1127 mm	85.6" x 81.4" 2174 x 2067
Base Config + TM + Office Finisher + Booklet Maker	65.6 in/ 1666 mm	27.4 in/ 695 mm	44.4 in/ 1127 mm	85.6 " x 81.4" 2174 x 2067

Table 1 Space Requirements

Configuration	Width (mm)	Depth (mm)	Height (mm)	Installation Space
Base Config + TM + Professional Finisher	75.7 in/ 1922 mm	27.0 in/ 685 mm	44.4 in/ 1127 mm	96" x 81.4" 2430 x 2067

Product Specs.

Voltage Requirements

Single Phase (2 conductors + ground wire)(Table 1)

Table 1 Voltage Requirements

Region	Power Voltage, VAC	Power Frequency, Hz	Power Rating
ESG (XE)	220-240 VAC (-10%, +6%)	50 +/- 3%	10 amp
USSG, XCL (XC)	110-127 VAC (-10%, +10%)	60 Hz +/- 3%	15 amp

Component Weights

The weights for the various components which make up the system are as follows (Table 2).

Table 2 Weights

Component	Weight (approx.)
Base Machine (IOT+Embedded Controller+DADF)	308 lbs (140 Kg)
High Capacity Feeder (HCF)	63.8 lbs (29 Kg)
Integrated Office Finisher	26.4 lbs (12 Kg)
Office Finisher LX	61.6 lbs (28 Kg)
Booklet Maker for Office Finisher LX	20.24 lbs (9.2 Kg)
Professional Finisher	132 lbs (60 Kg or less)
Booklet Maker for Professional Finisher	66 lbs (30 Kg or less)
Punch for Professional Finisher	1.54 lbs (0.7 Kg)
3TM	75.24 lbs (34.3 Kg)
TTM	94.82 lbs (43.1 Kg)
Inner Tray	1.76 lbs (0.8 Kg)

Product Codes

Table 3 Product Codes

Item	Product Code
IOT/DADF/OCT/Duplex Copier, 7525/7530/7535 120 VAC	XKK
IOT/DADF/OCT/Duplex Copier, 7525/7530/7535 120 VAC GSA	XKL
IOT/DADF/OCT/Duplex Copier, 7525/7530/7535 220 VAC	XKM
IOT/DADF/OCT/Duplex Copier, 7525/7530/7535 220 VAC GSA	XKN
IOT/DADF/OCT/Duplex Copier, 7545/7556 120 VAC	XKP
IOT/DADF/OCT/Duplex Copier, 7545/7556 120 VAC GASA	XKR
IOT/DADF/OCT/Duplex Copier, 7545/7556 220 VAC	XKT
IOT/DADF/OCT/Duplex Copier, 7545/7556 220 VAC GSA	XKU
Finisher, Office LX (SB-Finisher)	XLN
Finisher, Integrated (7525/7530/7535)	XDE
Finisher, Professional w/Booklet Maker	XLP for WH/ XLR for EH
TTM (Tandem Tray Module)	XLF
3TM (Three Tray Module)	XLE
High Capacity Feeder	GBK
Speed Kit (WH), 7525	XRA
Speed Kit (WH), 7530	XLL
Speed Kit (WH), 7535	XLK
Speed Kit (WH), 7545	XRB
Speed Kit (WH), 7556	XLM

Paper Capacities

Table 4 Paper Capacities

Specification	Paper Trays 1 - 4	Tray 5 (MSI)	Tray 6 (HCF)
Paper Sizes	Trays 1 • Min.: 5.5 x 8.5” SEF/ A5 SEF (148 x 210 mm) • Max: A3 SEF/11 x 17” SEF Trays 2-4 (3TM) • Min.: 5.5 x 8.5” SEF/ A5 SEF (148 x 210 mm) • Max: SRA3 SEF/12 x 18” SEF	Paper • Min.: 100 x 140 mm (postcard) • Max: 305 x 483 mm Envelopes • Min.: 98 x 190 mm (Monarch 7 3/4 size)	Paper • Min.: B5 LEF • Max: A4 LEF, Letter LEF
Paper Weights	Optimum: 24 lb./90 gsm Range: 60 - 256 gsm	Range: 55 - 256 gsm	Range: 55 - 216 gsm

Table 4 Paper Capacities

Specification	Paper Trays 1 - 4	Tray 5 (MSI)	Tray 6 (HCF)
Capacities 20 lb. (80 gsm)	2080 sheets HC TTM total: • Tray 1: 520 sheets • Tray 2: 520 sheets • Tray 3: 867 sheets (HCTT) 520 sheets (3TM) • Tray 4: 1133 sheets (HCTT) 520 sheets (3TM)	Paper • 100 sheets Transparencies • 70 sheets Envelopes • 10	Paper • 2000 sheets

Copy Speed

(1 original on platen; plain paper; simplex; fed from Tray 1; shown as B/W ppm/Color ppm)

- **WC 7525**
  - 8.5 x 11”/A4: 25 ppm/25 ppm
  - 11 x17”/A3: 14 ppm/14 ppm
- **WC 7530**
  - 8.5 x 11”/A4: 30 ppm/30 ppm
  - 11 x17”/A3: 17 ppm/17 ppm
- **WC 7535**
  - 8.5 x 11”/A4: 35 ppm/35 ppm
  - 11 x17”/A3: 20 ppm/20 ppm
- **WC 7545**
  - 8.5 x 11”/A4: 45 ppm/45 ppm
  - 11 x17”/A3: 22 ppm/22 ppm
- **WC 7556**
  - 8.5 x 11”/A4: 55 ppm/50 ppm
  - 11 x17”/A3: 27 ppm/25 ppm

FCOT/FPOT

Maximum First Copy Out Time: original on platen; 8.5” x 11” (A4); Tray 1 to center tray; 100%

- 7525: 8.7 sec. Color Priority Mode; 6.6 sec. B/W Priority Mode
- 7530: 6.4 sec. Color Priority Mode; 4.9 sec. B/W Priority Mode
- 7535: 6.4 sec. Color Priority Mode; 4.9 sec. B/W Priority Mode
- 7545: 5.7 sec. Color Priority Mode; 4.4sec B/W Priority Mode
- 7556: 5.2 sec. Color Priority Mode; 3.7sec B/W Priority Mode

First Print Output Time (does not include SBC process time for prints); 8.5” x 11” (A4); Tray 1 to center tray;

- 7525 Color -8.5 sec. max
- 7525 B/W - 6.4 sec. max (600 x 600dpi)
- 7530 Color - 6.2 sec. max
- 7530 B/W - 4.7 sec. max (600 x 600dpi)

- 7535 Color -6.2 sec. max
- 7535 B/W - 4.7 sec. max (600 x 600dpi)
- 7545 Color -5.5 sec. max
- 7545 B/W - 4.2 sec. max (600 x 600dpi)
- 7556 Color -5.0 sec. max
- 7556 B/W - 3.5 sec. max (600 x 600dpi)

Maximum Image Sizes

The product will reproduce 11”x17” full bleed when printing on 12”x18” paper and A3 full bleed when printing on SRA3 paper. The maximum length images (476.6 mm) are only produced on media 19” long. On all media, there is a Lead Edge deletion of 4 mm and a Trail Edge deletion of 2 mm. The Side Edge deletion varies with paper size. For paper less than 12” wide, the Side Edge deletion is 2 mm per edge. For widths greater than 12”, the Side Edge deletion is determined by the paper width less the imageable area, divided by 2.

Table 5 Image Specifications

Maximum Image Area	Guaranteed Image Quality Area
305 mm x 476.6 mm 12.0079” x 18.76”	297 mm x 476.6 mm 11.69” x 18.76”

Environmental Data and Requirements

Ambient Temperature and Humidity requirement:

- Minimum: 10º C / 50ºF at 15% humidity
- Maximum: 28º C / 82ºF at 85% humidity

IIT/DADF Specifications

Table 6 DADF Specifications

Document Size: Platen	Max size: 334.5 x 452 mm Max scannable area: 297 x 431.8 mm
Document Size: DADF	5.5” x 8.5” to 11” x 17” (A3) Max: 297 x 432 mm Min.: 148 x 210 mm
Document Weight: DADF	Min:16lb Max: 32lb
Document Capacity: DADF	110 sheets 38 to 80gsm 75 sheets 81 to 128gsm
R/E Capability:	Variable Percentages: 25% to 400% in 1% increments n/a Presets can be changed in Tools mode

Common Tools

Table 1 Common Tools

Description	Part Number
Screw Driver (-) 3 x 50	600T40205
Screw Driver (+) 6 x 100	600T1989
Screw Driver (+) NO.1	499T356
Stubby Driver (+) (-)	600T40210
Screw Driver (=) 100MM	499T355
Spanner and Wrench 5.5 x 5.5	600T40501
Spanner and Wrench 7x 7	600T40502
Hex Key Set	600T02002
Box Driver 5.5MM	600T1988
Box Driver 1/4 inch	
Side Cutting Nipper	600T40903
Round Nose Pliers	600T40901
Digital Multi-meter Set	600T2020
Interlock Cheater	600T91616
Silver Scale 150MM	600T41503
CE Tool Case	600T1901
Magnetic Screw Pick-up Tool	600T41911
Scribe Tool	600T41913
Magnetic pickup	600T41911
Eye Loop	600T42008
Flash Light	600T1824
Brush	600T41901
Tester Lead Wire (red)	600T 9583
Tester Lead Wire (black)	600T2030

Product Tools and Test Patterns

Table 1 Tools and Test Patterns

Description	Part Number
Color Test Pattern	82E13120
Geometric Test Pattern	82E8220
DADF Test Pattern	82E2000
DADF Test Pattern (A3)	82P521
Copy Paper Carrying Case	600T1999
Copy Paper Zip Lock Bag	600T2000
Xerox Color Xpressions Plus 24# 11×17 in,	3R5465
Colortech Plus - 90 gsm - A3	3R94642
Service and Machine NVM Log	700P97436
USB Cable	600T02231
PWS power cord adapter	600T2018
Micro Probe Kit	600T02177
Machine Service Log	Adobe PDF file on CD
USB Flash Drive	701P30980
Communication Data Cable	600T02304

Cleaning Materials

Table 1 Cleaning Materials

Description	USSG Part Number	XE Part Number
Cleaning fluid (8oz., Formula A)	43P48	8R90034
Film remover (8 oz.)	43P45	8R90176
Lens/mirror cleaner	43P81	8R90178
Lint-free (white) cleaning cloth	19P3025	19P3025
Lint-free Optics cleaning cloth	499T90417	499T90417
Cleaning towels	35P3191	600S4372
Drop cloth	35P1737	35P1737
Cotton Swab	35P2162	35P2162

CRUs and Consumables

Table 1 CRUs and Consumables

Name	Part Number	Comments
Black Toner Cartridge	006R01509	metered (worldwide)
	006R01513	US/XCL/XE sold
	006R01517	DMO sold
Cyan Toner Cartridge	006R01512	metered (worldwide)
	006R01516	US/XCL/XE sold
	006R01520	DMO sold
Magenta Toner Cartridge	006R01511	metered (worldwide)
	006R01515	US/XCL/XE sold
	006R01519	DMO sold
Yellow Toner Cartridge	006R01510	metered (worldwide)
	006R01514	US/XCL/XE sold
	006R01518	DMO sold
SMart Kit Drum Cartridge	013R00662	
SMart Kit Waste Toner Container	008R13061	
Transfer Belt Cleaner	001R00613	
2nd BTR	008R13064	
Staple Refills - Convenience Stapler	008R12941	3 refills/carton
Staple Refills - Integrated Office Finisher	008R12941	3 refills/carton
Staple Refills - Office Finisher LX	008R12941	3 refills/carton
Staple Refills - Professional Finisher	008R12941	3 refills/carton
Staple Cartridge - Convenience Stapler	008R12964	1 cartridge
Staple Cartridge - Office Finisher LX	008R12964	1 cartridge
Staple Cartridge - Office Finisher LX Booklet Maker	008R12897	8 cartridges/carton
Staple Cartridge - Professional Finisher	008R12964	1 cartridge
Staple Cartridge - Professional Finisher Booklet Maker	008R12925	4 cartridges/carton

Glossary of Terms

Table 1 Glossary

Term	Description
A3	Paper size 297 millimeters (11.69 inches) x 420 millimeters (16.54 inches).
A4	Paper size 210 millimeters (8.27 inches) x 297 millimeters (11.69 inches).
AC	Alternating Current is type of current available at power source for machine.
ACT	Advanced Customer Training: teaches customers to perform some of service that is normally performed by Xerox Service Representative.
A/D	Analog to Digital refers to conversion of signal
ADC	Automatic Density Control
ADJ	Adjustment Procedure
AGC	Automatic Gain Control
A/P	Advanced/Professional (Finishers)
ATC	Automatic Toner Concentration
Bit	Binary digit, either 1 or 0, representing an electrical state.
BSD	Block Schematic Diagram
BTR	Bias Transfer Roll
BUR	Back up Roll
CCD	Charge Coupled Device (Photoelectric Converter)
CCM	Color Control Module
CD	1:Circuit Diagram; 2: Compact Disc
Chip	Integrated Circuit (IC)
CRU	Customer Replaceable Unit
CRUM	Customer Replaceable Unit Memory
CYMK	Toner colors for machine; Y=yellow, C=cyan, M=magenta, and K=black
DADF	Duplexing Automatic Document Feeder
DC	Direct Current is type of power for machine components. Machine converts AC power from power source to DC power.
DMM	Digital Multimeter is generic name for meter that measures voltage, current, or electrical resistance.
Duplex	2-sided printing or copying
EA	Emulsion Aggregation (toner)
EME	Electromagnetic Emissions are emitted from machine during normal operation and power of these emissions are reduced by machine design features.
ESD	Electrostatic Discharge. A transfer of charge between bodies at different electrostatic potential.
ESG	European Solutions Group - also referred to as XE (Xerox Europe)
FE	Field Engineer
FS	Fast Scan (direction) - Inboard-to Outboard
GND	Ground
HCF	High Capacity Feeder
HDD	Hard Disk Drive

Table 1 Glossary

Term	Description
HFSI	High Frequency Service Item
HGEA	High Grade Emulsion Aggregation (toner)
HVPS	High Voltage Power Supply
Hz	Hertz (Cycles per second)
IBT	Intermediate Belt Transfer
I/F	Interface
IIO	Intermediate Image Overwrite
IIT	Image Input Terminal - the Scanner/CCD portion of the machine
IOT	Image Output Terminal - the ROS/Xero/paper handling/ fusing portion of the machine
IPS	Image Processing Subsystem
IQ	Image Quality
JBA	Job-based Accounting
KC	1000 copies
LCD	Liquid Crystal Display
LE	Lead Edge of copy or print paper, with reference to definition of term TE
LED	Light Emitting Diode
LEF	Long Edge Feed
LPH	SLED Print Head
LTR	Letter size paper (8.5 x 11 inches)
LUT	Look Up Table - array of NVM locations that store process control data
LVPS	Low Voltage Power Supply
MCU	Machine Control Unit
MF	Multi-Function
MN	Multinational
MOB	Marks On Belt
MRD	Machine Resident Disk
MSI	Multi Sheet Insert
NIC	Network Interface Card
NVM	Non Volatile Memory
OCT	Offset Catch Tray
OEM	Original equipment manufacturer
OGM	On-going Maintenance
PC	Personal Computer
PL	Parts List
P/O	Part of (Assembly Name)
PWB	Printed Wiring Board
PWS	Portable Workstation for Service
PJ	Plug Jack (electrical connections)
RAM	Random Access Memory

Table 1 Glossary

Term	Description
RAP	Repair Analysis Procedure for diagnosis of machine status codes and abnormal conditions
R/E	Reduction/Enlargement refers to features selection or components that enable reduction or enlargement
Regi-Con	Registration Control
REP	Repair Procedure for disassembly and reassembly of component on machine
RIS	Raster Input Scanner
ROM	Read Only Memory
SAD	Solid Area Density
SBC	Single Board Controller
SCP	Service Call Procedure
SEF	Short Edge Feed
Self-test	An automatic process that is used to check Control Logic circuitry. Any fault that is detected during self-test is displayed by fault code or by LEDs on PWB.
SIMM	Single Inline Memory Module used to increase printing capacity
Simplex	Single sided copies
SLED	Light-Emitting Diode print head
SOK	System Operation Key, Software Option Key
FS	Fast Scan (direction) - LE - to - TE
TE	Trail Edge of copy or print paper, with reference to definition of term LE
TRC	Tone Reproduction Curve
UM	Unscheduled Maintenance
UI	User Interface
USB	Universal Serial Bus
W/	With - indicates machine condition where specified condition is present
W/O	Without - indicates machine condition where specified condition is not present
XBRA	Xerox Brazil
XE	Xerox Europe - also referred to as ESG (European Solutions Group)
XLA	Xerox Latin America
YCMK	Toner colors for machine; Y=yellow, C=cyan, M=magenta, and K=black
XMEX	Xerox Mexico

Change Tags

Change Tag Introduction

Important modifications to the copier are identified by a tag number which is recorded on a tag matrix:

- The tag matrix for the IOT is molded into the inside of the Front Door.
- The tag matrix for the Finisher is a label affixed to the inside of the Finisher Front Door

This section describes all of the tags associated with the machine, as well as multinational applicability, classification codes, and permanent or temporary modification information.

Classification Codes

A tag number may be required to identify differences between parts that cannot be interchanged, or differences in diagnostic, repair, installation, or adjustment procedures.

A tag number may also be required to identify the presence of optional hardware, special non-volatile memory programming, or whether mandatory modifications have been installed. Each tag number is given a classification code to identify the type of change that the tag has made. The classification codes and their descriptions are listed in Table 1.

Table 1 Classification Codes

Classification Code	Description
M	Mandatory tag.
N	Tag not installed in the field.
O	Optional tag.
R	Repair tag.

TAG: P-001

CLASS: R

NAME: **Duplex Assembly Clutch**

PURPOSE: Replace one-way clutch with gear for cost improvement

KIT NUMBER: 604K63890

PARTS LIST ON: PL 14.6

TAG: P-002

CLASS: R

NAME: **UI USB Cable**

PURPOSE: Replace mounting bracket and two-piece UI-to-MCU USB cable with new bracket and single piece-cable.

PARTS LIST ON: PL 1.2

7 Wiring Data

Plug/Jack Location List

Plug/Jack Location 7-3
IOT Plug/Jack Illustrations 7-13
HCF Plug/Jack Illustrations 7-28
Professional Finisher Plug/Jack Illustrations 7-29
Integrated Office Finisher Plug/Jack Illustrations 7-35
Office Finisher LX Plug/Jack Illustrations 7-37

Wirenets

AC Wirenets 7-43
1.8 VDC Wirenets 7-45
1.8 VRTN Wirenet 7-46
+2.5 VDC Wirenet 7-47
2.5VDC RTN 7-48
+3.3 VDC-1 Wirenet 7-49
+ 3.3 VDC-2 Wirenet 7-50
3.3 VDC RTN-1 Wirenet 7-51
3.3 VDC RTN-2 Wirenet 7-52
+5VDC-1 Wirenet 7-53
+5VDC-2 Wirenet 7-54
+5VDC-3 Wirenet 7-55
+5VDC-4 Wirenet 7-56
+5VDC-5 Wirenet 7-57
5VRTN-1 Wirenet 7-58
5VDC RTN-2 Wirenet 7-59
5VDC RTN-3 Wirenet 7-60
5VDC RTN-4 Wirenet 7-61
5VDC RTN-5 Wirenet 7-62
+24VDC-1 Wirenet 7-63
+24VDC-2 Wirenet 7-64
+24VDC-3 Wirenet 7-65
+24VDC-4 Wirenet 7-66
24VDC RTN-1 Wirenet 7-67
24VDC RTN-2 Wirenet 7-68
24VDC RTN-3 Wirenet 7-69
IIT +3.3/+5/+24VDC Wirenet 7-70
IIT_3.3/5/24VRTN Wirenet 7-71
DADF_+5VDC Wirenet 7-72
DADF_5VRTN Wirenet 7-73
DADF_+24VDC Wirenet 7-74
DADF +24VRTN Wirenet 7-75
HCF +24VDC Wirenet 7-76
HCF +5VDC Wirenet 7-78
HCF DC COM Wirenet 7-80
Finisher (Int) +24VDC/24VDC RTN 7-82
Finisher (Int) +5VDC Wirenet 7-83
Finisher (Int) DC COM Wirenet 7-84
Office Finisher LX Wirenets 7-87
A/P Finisher Wirenets 7-90

Block Schematic Diagrams (BSDs)

Chain 1 BSDs 7-103
Chain 2 BSDs 7-115
Chain 3 BSDs 7-116
Chain 4 BSDs 7-125
Chain 5 BSDs 7-126
Chain 6 BSDs 7-135
Chain 7 BSDs 7-147
Chain 8 BSDs 7-163
Chain 9 BSDs 7-173
Chain 10 BSDs 7-219
Chain 12 BSDs 7-232

Plug/Jack Location

How to Use the Plug/Jack Location List

- To find which position to install specific connectors to, refer to the **Plug/Jack Location List** (Table 1) for Figure No. and Item No., and then to the figures in **Plug/Jack Positions**.
- P/J No. on Plug/Jack Location List is expressed in the four ways below:
  - J250 represents Jack 250.
  - P250 represents Plug 250.
  - CN1 represents Connector 1.
  - FS1 represents Faston Terminal 1.

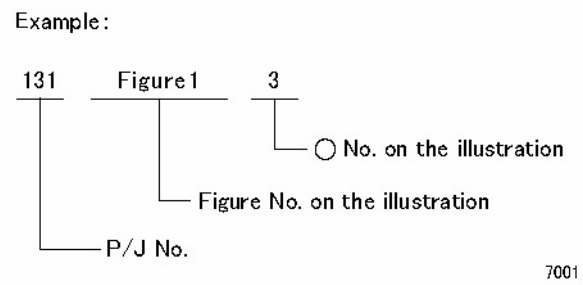

Figure 1 Plug/Jack

IOT Plug/Jack Location List

Table 1 IOT Plug/Jack List

P/J No.	Figure No.	Item No.	Remarks (where to connect)
P/J0	18	15	
P/J1	16	8	Main Low Voltage Power Supply
P/J1	18	16	USB (Link Connector)
P/J1	18	13	MCW UI I/F PWB
P/J1	17	9	IIT
P/J1	11		SBC
P2	18	1	USB
J2	11		SBC
J3	11		SBC
J4	11		SBC
P/J2	18	4	MCW UI I/F PWB
P/J3	18	5	MCW UI I/F PWB
P/J4	16	9	Main Low Voltage Power Supply
P/J4	18	6	MCW UI I/F PWB
P/J5	16	12	Main Low Voltage Power Supply
P/J5	18	9	MCW UI I/F PWB
P/J6	16	11	Main Low Voltage Power Supply
P/J6	18	8	MCW UI I/F PWB
P/J7	11		SBC
P/J7	16	10	Main Low Voltage Power Supply
P/J7	18	7	MCW UI I/F PWB
P/J8	10	10	
P/J8	24	6	Sub LVPS
P9	24	1	
P/J10	11		SBC
J10	14	9	GFI Breaker
P/J10	18	3	
P/J11	18	2	
J11	14	8	GFI Breaker
P/J11	11		SBC
P/J12	11		SBC
P/J12	2	6	
P/J13	11		SBC
P/J13	2	3	
P/J14	11		SBC
P/J14	2	5	
P/J15	11		SBC
P/J15	2	4	

Table 1 IOT Plug/Jack List

P/J No.	Figure No.	Item No.	Remarks (where to connect)
P/J15	18	11	UI 10key PWB
P/J16	11		SBC
P/J19	11		SBC
P/J20	11		SBC
P/J24	11		SBC
P/J30	24	7	
P/J31	11		SBC
P/J42	11		SBC
P/J45	11		SBC
J47	11		SBC
P/J49	11		SBC
P/J70	15	8	IOT Heater Kit (Option)
P/J72	15	9	
P/J73	22	19	Tray Heater (Option)
P/J74	13	2	
P/J75	13	1	
P81	14	6	
P82	14	7	
P83	14	14	
P85	14	12	
P86	14	11	
P87	14	13	
P90	14	10	
P/J91	16	7	
P/J92	16	6	
P/J100	12	5	
P/J101	2	1	Front Cover Interlock Switch
P/J101	21	7	3T Module Tray 2 Paper Size Sensor
P/J101	28	1	TT Module-Tray 2 Paper Size Sensor
P/J102	21	6	3T Module Tray 3 Paper Size Sensor
P/J102	28	3	TT Module-Tray 3 Paper Size Sensor
P/J103	21	5	3T Module Tray 4 Paper Size Sensor
P/J103	28	2	TT Module-Tray 4 Paper Size Sensor
P/J104	21	8	3T Module
P/J104	26	3	TT Module
P/J106	21	3	3T Module
P/J106	27	10	TT Module
P/J107	21	2	3T Module
P/J107	27	9	TT Module
P/J108	21	4	3T Module

Table 1 IOT Plug/Jack List

P/J No.	Figure No.	Item No.	Remarks (where to connect)
P/J108	26	2	TT Module
P/J109	27	14	
P/J110	16	17	Waste Toner Bottle Full Sensor
P/J110	21	3	3T Module Tray 3 No Paper Sensor
P/J110	27	13	TT Module-Tray 3 No Paper Sensor
P/J111	16	16	Waste Toner Bottle Position Sensor
P/J111	21	2	3T Module Tray 3 Nudger Level Sensor
P/J111	27	12	TT Module-Tray 3 Nudger Level Sensor
P/J112	1	10	Drum CRUM Coupler Assembly (Y)
P/J112	21	10	3T Module Tray 3 Feed Out Sensor
P/J112	26	1	TT Module-Tray 3 Feed Out Sensor
P/J113	1	8	Drum CRUM Coupler Assembly (M)
P/J113	27	4	TT Module
P/J114	1	6	Drum CRUM Coupler Assembly (C)
P/J114	21	3	3T Module Tray 4 No Paper Sensor
P/J114	27	3	TT Module-Tray 4 No Paper Sensor
P/J115	1	4	Drum CRUM Coupler Assembly (K)
P/J115	21	2	3T Module Tray 4 Nudger Level Sensor
P/J115	27	2	TT Module-Tray 4 Nudger Level Sensor
P/J116	21	9	3T Module
P/J116	27	5	TT Module
P/J120	3	4	
P/J121	3	3	
P/J122	3	2	
P/J123	3	1	
P/J124	1	11	
P/J125	1	14	
P/J126	1	15	
P/J127	1	16	
P/J130	16	19	
P/J144	12	11	
P/J150	4	2	
P/J151	4	6	
P/J153	4	5	
P/J154	4	4	
P/J160	8	5	
P/J161	8	4	
P/J162	6	10	
P/J163	6	11	
P/J164	6	1	

Table 1 IOT Plug/Jack List

P/J No.	Figure No.	Item No.	Remarks (where to connect)
P/J165	6	2	
P/J166	6	12	
P/J168	6	5	
P/J169	6	8	
P/J171	8	10	
P/J172	9	5	
P/J173	9	3	
P/J174	15	10	
P/J175	7	9	
P/J176	7	13	
P/J177	8	7	
P/J178	8	6	
P/J179	9	4	
P/J180	7	1	
P/J181	7	3	
P/J182	4	3	
P/J183	9	6	
P/J192	5	5	
P/J193	5	1	
P/J194	5	7	
P/J195	5	9	
P/J198	5	6	
P/J210	1	9	
P/J211	1	7	
P/J212	1	5	
P/J213	1	3	
P/J215	16	15	
P/J217	7	7	
P/J218	7	8	
P/J220	14	1	
P/J221	14	4	Toner Dispense Motor (M)
P/J221	21	1	3T Module Tray 2 Feed/Lift Up Motor
P/J221	27	8	TT Module-Tray 2 Feed/Lift Up Motor
P/J222	14	2	Toner Dispense Motor (C)
P/J222	21	1	3T Module Tray 3 Feed/Lift Up Motor
P/J222	27	11	TT Module-Tray 3 Feed/Lift Up Motor
P/J223	14	3	Toner Dispense Motor (K)
P/J223	21	1	3T Module Tray 4 Feed/Lift Up Motor
P/J223	27	1	TT Module-Tray 4 Feed/Lift Up Motor
P/J224	22	17	3T Module

Table 1 IOT Plug/Jack List

P/J No.	Figure No.	Item No.	Remarks (where to connect)
P/J224	25	4	TT Module (7545/56)
P/J224	25	5	TT Module (7525/30/35)
P/J225	24	12	
P/J226	22	18	3T Module TM Take Away Motor 2 (7545/56)
P/J226	24	9	
P/J226	25	5	TT Module (7545/56)
P/J227	24	11	
P/J228	1	12	
P/J230	12	4	
P/J231	10	15	
P/J232	3	7	(7525/30/35)
P/J234	14	15	
P/J235	16	14	
P/J236	3	6	IBT Fan 2
P/J236	16	2	LVPS Fan
P/J238	1	2	
P/J239	16	21	
P/J240	12	12	
P/J241	12	13	
P/J242	12	8	
P/J243	12	7	
P/J244	12	9	
P/J245	12	10	
P/J246	12	14	
P/J247	12	15	
P/J248	12	16	
P/J249	12	17	
P/J250	12	2	
P/J251	13	4	
P/J252	13	3	
P/J253	8	14	
P/J254	12	6	
P/J260	8	3	
P/J261	8	2	(7525/30/35)
P/J262	6	6	
P/J263	6	3	
P/J265	6	7	
P/J266	6	4	
P/J268	8	8	
P/J269	9	2	

Table 1 IOT Plug/Jack List

P/J No.	Figure No.	Item No.	Remarks (where to connect)
P/J271	6	9	
P/J272	1	1	
P/J275	7	10	
P/J280	7	2	
P/J300	11	2	
P/J309	11	9	
P313	11		Backplane (rear)
P/J335	11		
P/J352	23	4	FAX mini PWB
P/J401	10	2	
P/J411	10	4	
P/J412	10	14	
J413	25	1	
P/J414	10	13	
P/J415	10	5	
P/J416	10	3	
P/J417	10	12	
P/J431	10	7	
P/J450	7	4	
P451	11		Backplane (rear)
P/J452	10	1	
P/J453	7	6	
P/J454	7	5	
P/J460	16	18	HVPS(DEVE/BCR)
P/J461	12	1	HVPS(1st/2nd/DTC)
P/J501	16	4	
P/J502	16	3	
P/J503	16	5	
P/J504	24	4	
P/J505	24	5	
P/J506	24	2	
P507	24	3	
P/J510	16	1	
P/J513	16	20	(7545/56)
P/J514	16	13	(7545/56)
P/J520	10	26	
P/J521	10	23	
P/J522	10	32	
P/J523	10	33	
P/J524	10	34	

Table 1 IOT Plug/Jack List

P/J No.	Figure No.	Item No.	Remarks (where to connect)
P/J525	10	30	
P/J526	10	21	(7545/56)
P/J527	10	19	
P/J528	10	17	
P/J529	10	31	
P/J530	24	8	
P/J532	10	24	
P/J534	10	22	
P/J535	10	35	
P/J536	10	23	
P/J537	10	16	
P/J541	22	21	3T Module
P/J541	25	13	TT Module
P/J542	22	20	3T Module
P/J542	25	12	TT Module
P/J545	25	11	
P/J548	22	24	3T Module
P/J548	25	8	TT Module
P/J549A	22	26	
P/J549B	22	26	
P/J549	25	10	TT Module
P/J550	15	7	LPH Rear PWB(K)
P/J550	22	22	3T Module Tray Module PWB
P/J550	25	14	TT Module-Tray Module PWB
P/J551	15	7	LPH Rear PWB(C)
P/J551	22	23	3T Module Tray Module PWB
P/J551	25	7	TT Module-Tray Module PWB
P/J552	15	7	LPH Rear PWB (M)
P/J552	25	6	TT Module-Tray Module PWB
P553	22	25	3T Module Tray Module PWB
P/J553	15	7	LPH Rear PWB(Y)
P/J553	25	9	TT Module-Tray Module PWB
P/J554	10	6	
P/J555	10	8	
P/J556	10	9	
P/J557	10	11	
P/J558	15	6	
P/J559	15	6	
P/J560	15	6	
P/J561	15	6	

Table 1 IOT Plug/Jack List

P/J No.	Figure No.	Item No.	Remarks (where to connect)
P/J562	15	5	
P/J563	15	5	
P/J564	15	5	
P/J565	15	5	
P/J566	15	4	
P/J567	15	4	
P/J567	5	8	Fuser
P/J568	15	4	
P/J569	15	4	
P/J570	15	3	
P/J571	15	3	
P/J572	15	3	
P/J573	15	3	
P/J574	15	2	
P/J575	15	2	
P/J576	15	2	
P/J577	15	2	
P/J578	15	1	
P/J579	15	1	
P/J580	15	1	
P/J581	15	1	
P/J590	10	29	
P/J591	10	28	
P/J592	10	27	
P/J593	10	20	
P/J594	10	18	
P600A/DJ600A	5	3	
P600B/DJ600B	5	2	
P600	5	4	
P/J610	4	1	
P/J611	8	9	
P/J612	7	11	
P/J615	2	2	
P/J616	9	1	Link Connector (MSI Unit)
P/J617	9	7	
P/J618	8	11	
P/J619	3	5	
P/J631A	12	3	
P/J631B	12	3	
P/J632	8	1	

Table 1 IOT Plug/Jack List

P/J No.	Figure No.	Item No.	Remarks (where to connect)
P/J633	1	13	
P/J634	24	10	
P/J635	7	12	
P/J661	21	19	3T Module
P/J661	26	8	TT Module
P/J662	21	16	3T Module
P/J662	26	6	TT Module
P/J663	21	13	3T Module
P/J663	27	7	TT Module
P/J668	21	11	3T Module
P/J668	26	4	TT Module
P/J669	21	18	3T Module
P/J669	26	9	TT Module
P/J671	21	15	3T Module
P/J671	26	5	TT Module
P/J672	21	17	3T Module
P/J672	26	7	TT Module
P/J673	21	12	3T Module
P/J673	27	6	TT Module
P/J674	21	14	
P/J675	25	2	
P/J676	25	3	
P/J700	17	8	
P/J700	17	11	CCD
P/J710	17	3	
P/J720	17	1	
P/J722	17	2	
P/J723	17	7	
P/J731	17	18	
P/J750	17	6	
P/J751	20	12	
P/J752	20	11	
P/J753	20	10	
P/J754	20	4	
P/J755	20	9	
P/J756	20	3	
P/J757	20	1	
P/J758	20	2	
P/J759	20	14	
P/J760	20	13	

Table 1 IOT Plug/Jack List

P/J No.	Figure No.	Item No.	Remarks (where to connect)
P/J761	19	18	DADF
P/J762	19	3	DADF
P/J763	19	2	DADF
P/J764	19	1	DADF
P/J765	19	17	DADF
P/J766	19	10	
P/J767	19	4	
P/J768	19	5	DADF
P/J769	19	6	
P/J770	19	11	
P/J771	17	13	
P/J771	20	5	DADF
P/J772	17	12	IIT
P/J772	20	6	DADF
P/J773	17	14	IIT
P/J773	19	7	DADF
P/J774	17	15	IIT
P/J774	19	9	
P/J775	17	17	IIT
P/J775	19	8	
P/J776	17	10	IIT
P/J776	20	8	DADF
P/J777	20	7	DADF
P/J778	19	15	
P/J779	19	14	
P/J780	19	16	Stamp Solenoid (Option)
P/J791	19	17	
P903	14	5	
P904	25	15	TT Module
P930/J71	17	20	IIT Heater Kit (Option)
P/J931	17	19	IIT Heater 2(Option)
P/J932	17	16	IIT Heater 1(Option)
P1343	11		Backplane (rear)
P/J7191	17	5	
P/J7192	17	4	
CN1	18	10	Inverter PWB
CN1	18	14	
CN2	18	12	Inverter PWB
F1	19	12	
F2	19	13	

HCF Plug/Jack Location List

Table 2 HCF Plug/Jack List

P/J No.	Figure No.	Item	Remarks (where to connect)
J678	1	10	AP/DC-II 7000G, 700DCP (FX)
J800	1	11	AP/DC-III C4100G, AP/DC-IV C5570G (FX)
PF/JF01	2	4	
PF/JF02	2	5	
PF/JF03	2	6	
PF/JF04	2	7	
PF/JF05	2	8	
PF/JF06	2	9	
PF/JF08	2	3	
PF/JF51	2	2	
PF/FJ52	2	1	
PF/JF53	2	10	
PF/JF54	1	2	
PF/JF56	1	9	
PF/JF56A	1	9	
PF/JF56B	1	9	
PF/JF57	2	11	
PF/JF58	1	1	
PF/JF60	1	7	
PF/JF61	1	5	
PF/JF62	1	6	
PF/JF67	1	4	
FS001	1	3	
FS002	1	3	
FS003	1	8	
FS004	1	8	

Professional Finisher Plug/Jack Location List

Table 3 Professional Finisher Plug/Jack Location List

Connector Number	Figure Number	Item Number	Figure Title
P/J2	Figure 8	9	Stacker, H-Transport PWB, LVPS
P/J502	Figure 8	11	Stacker, H-Transport PWB, LVPS
P/J505	Figure 8	10	Stacker, H-Transport PWB, LVPS
P/J800	Figure 2	6	Professional Finisher Rear
P/J8175	Figure 11	5	Booklet Front -Professional Finisher
P/J8176	Figure 10	5	Booklet Rear -Professional Finisher
P/J8177	Figure 10	2	Booklet Rear -Professional Finisher

Table 3 Professional Finisher Plug/Jack Location List

Connector Number	Figure Number	Item Number	Figure Title
P/J8178	Figure 10	4	Booklet Rear -Professional Finisher
P/J8179	Figure 10	12	Booklet Rear -Professional Finisher
P/J8180	Figure 10	11	Booklet Rear -Professional Finisher
P/J8181	Figure 11	4	Booklet Front -Professional Finisher
P/J8182	Figure 11	1	Booklet Front -Professional Finisher
P/J8183	Figure 11	2	Booklet Front -Professional Finisher
P/J8185	Figure 10	6	Booklet Rear -Professional Finisher
P/J8186	Figure 10	10	Booklet Rear -Professional Finisher
P/J8187	Figure 10	7	Booklet Rear -Professional Finisher
P/J8188	Figure 10	13	Booklet Rear -Professional Finisher
P/J8189	Figure 11	6	Booklet Front -Professional Finisher
P/J8190	Figure 10	3	Booklet Rear -Professional Finisher
P/J8191	Figure 10	1	Booklet Rear -Professional Finisher
P/J8196	Figure 10	9	Booklet Rear -Professional Finisher
P/J8197	Figure 10	8	Booklet Rear -Professional Finisher
J8201	Figure 11	9	Booklet Front -Professional Finisher
P8201	Figure 11	3	Booklet Front -Professional Finisher
J8202	Figure 13	6	Professional Finisher - Booklet PWB
P8202	Figure 9	7	Professional Finisher - Finisher PWB
J8203	Figure 9	7	Professional Finisher - Finisher PWB
P8203	Figure 9	8	Professional Finisher - Finisher PWB
P/J8218	Figure 12	3	Professional Finisher Booklet Tray Unit
P/J8300	Figure 9	7	Professional Finisher - Finisher PWB
P/J8301	Figure 9	8	Professional Finisher - Finisher PWB
P/J8302	Figure 9	16	Professional Finisher - Finisher PWB
P/J8303	Figure 7	8	Professional Finisher Rear
P/J8304	Figure 9	1	Professional Finisher - Finisher PWB
P/J8305	Figure 9	18	Professional Finisher - Finisher PWB
P/J8306	Figure 9	4	Professional Finisher - Finisher PWB
P/J8307	Figure 9	5	Professional Finisher - Finisher PWB
P/J8308	Figure 9	2	Professional Finisher - Finisher PWB
P/J8309	Figure 9	19	Professional Finisher - Finisher PWB
P/J8310	Figure 9	9	Professional Finisher - Finisher PWB
P8311	Figure 9	15	Professional Finisher - Finisher PWB
P/J8312	Figure 7	6	Professional Finisher - Rear
P/J8313	Figure 9	12	Professional Finisher - Finisher PWB
P/J8314	Figure 9	11	Professional Finisher - Finisher PWB
P/J8315	Figure 9	13	Professional Finisher - Finisher PWB
P/J8316	Figure 9	10	Professional Finisher - Finisher PWB
P/J8317	Figure 9	14	Professional Finisher - Finisher PWB

Table 3 Professional Finisher Plug/Jack Location List

Connector Number	Figure Number	Item Number	Figure Title
P/J8319	Figure 2	8	Professional Finisher - Top Tray Exit Sensor, Gate Sensor
P/J8320	Figure 3	1	Professional Finisher Compiler Exit Sensor, Buffer Path Sensor
P/J8321	Figure 2	2	Professional Finisher - Top Tray Exit Sensor, Gate Sensor
P/J8322	Figure 2	3	Professional Finisher - Top Tray Exit Sensor, Gate Sensor
P/J8324	Figure 7	25	Professional Finisher - Rear
P/J8325	Figure 7	23	Professional Finisher - Rear
P/J8326	Figure 8	4	Professional Finisher - Stacker Sensor, H-Transport PWB, LVPS
P/J8327	Figure 8	3	Professional Finisher - Stacker Sensor, H-Transport PWB, LVPS
P/J8328	Figure 7	20	Professional Finisher - Rear
P/J8330	Figure 8	1	Professional Finisher - Stacker Sensor, H-Transport PWB, LVPS
P/J8331	Figure 8	2	Professional Finisher - Stacker Sensor, H-Transport PWB, LVPS
P/J8332	Figure 7	16	Professional Finisher - Rear
P/J8333	Figure 7	13	Professional Finisher - Rear
P/J8334	Figure 7	4	Professional Finisher - Rear
P/J8335	Figure 7	3	Professional Finisher - Rear
P/J8336	Figure 7	24	Professional Finisher - Rear
P/J8338	Figure 7	22	Professional Finisher - Rear
P/J8339	Figure 7	2	Professional Finisher - Rear
P/J8340	Figure 3	2	Professional Finisher - Compiler Exit Sensor, Buffer Path Sensor
P/J8440	Figure 7	17	Professional Finisher - Rear
P/J8341	Figure 7	19	Professional Finisher - Rear
P/J8342	Figure 7	12	Professional Finisher - Rear
P/J8343	Figure 7	11	Professional Finisher - Rear
P/J800	Figure 9	6	Professional Finisher - Finisher PWB
P/J8344	Figure 6	3	Professional Finisher - Puncher Unit
P/J8345	Figure 7	10	Professional Finisher - Rear
P/J8346	Figure 6	8	Professional Finisher - Puncher Unit
P/J8347	Figure 6	7	Professional Finisher - Puncher Unit
P/J8348	Figure 6	1	Professional Finisher - Puncher Unit
P/J8349	Figure 7	9	Professional Finisher - Rear
P/J8350	Figure 6	5	Professional Finisher - Puncher Unit
P/J8351	Figure 6	4	Professional Finisher - Puncher Unit

Table 3 Professional Finisher Plug/Jack Location List

Connector Number	Figure Number	Item Number	Figure Title
P/J8352	Figure 6	2	Professional Finisher - Puncher Unit
P/J8353	Figure 6	6	Professional Finisher - Puncher Unit
P/J8354	Figure 4	3	Professional Finisher - Stapler Unit
P/J8355	Figure 7	14	Professional Finisher - Rear
P/J8356	Figure 4	1	Professional Finisher - Stapler Unit
P/J8357	Figure 4	2	Professional Finisher - Stapler Unit
P/J8358	Figure 4	4	Professional Finisher - Stapler Unit
P/J8359	Figure 5	2	Professional Finisher - Compile Tray Assembly
P/J8360	Figure 5	3	Professional Finisher - Compile Tray Assembly
P/J8361	Figure 5	1	Professional Finisher - Compile Tray Assembly
P/J8362	Figure 5	5	Professional Finisher - Compile Tray Assembly
P/J8363	Figure 5	4	Professional Finisher - Compile Tray Assembly
J8364	Figure 2	4	Professional Finisher - Top Tray Exit Sensor, Gate Sensor
J8365	Figure 2	7	Professional Finisher - Top Tray Exit Sensor, Gate Sensor
P/J8371	Figure 8	5	Professional Finisher - Stacker, H-Transport PWB, LVPS
P/J8373	Figure 8	7	Professional Finisher - Stacker, H-Transport PWB, LVPS
P/J8376	Figure 9	17	Professional Finisher - Finisher PWB
P/J8377	Figure 13	3	Professional Finisher - Booklet PWB
P/J8378	Figure 13	1	Professional Finisher - Booklet PWB
P/J8383	Figure 2	6	Professional Finisher - Top Tray Exit Sensor, Gate Sensor
J8384	Figure 2	5	Professional Finisher - Top Tray Exit Sensor, Gate Sensor
P8389	Figure 9	3	Professional Finisher - Finisher PWB
P/J8391	Figure 7	26	Professional Finisher - Rear
P/J8392	Figure 3	3	Professional Finisher Compiler Exit Sensor, Buffer Path Sensor
P/J8393	Figure 7	1	Professional Finisher - Rear
P/J8394	Figure 7	21	Professional Finisher - Rear
P/J8396	Figure 8	6	Professional Finisher - Stacker, H-Transport PWB, LVPS
P/J8405	Figure 13	4	Professional Finisher - Booklet PWB
P/J8406	Figure 13	10	Professional Finisher - Booklet PWB
P/J8407	Figure 13	9	Professional Finisher - Booklet PWB
P/J8408	Figure 13	8	Professional Finisher - Booklet PWB
P/J8409	Figure 7	7	Professional Finisher - Rear
P/J8411	Figure 13	11	Professional Finisher - Booklet PWB
P/J8429	Figure 13	5	Professional Finisher - Booklet PWB
P/J8432	Figure 2	1	Professional Finisher - Top Tray Exit Sensor, Gate Sensor

Table 3 Professional Finisher Plug/Jack Location List

Connector Number	Figure Number	Item Number	Figure Title
P/J8434	Figure 7	5	Professional Finisher - Rear
P/J8440	Figure 7	17	Professional Finisher - Rear
P/J8441	Figure 7	18	Professional Finisher - Rear
J8444	Figure 1		Professional Finisher - H-Transport Assembly
P8444	Figure 8	8	Professional Finisher - Stacker, H-Transport PWB, LVPS
P/J8445	Figure 1		Professional Finisher - H-Transport Assembly
P/J8446	Figure 1		Professional Finisher - H-Transport Assembly
P/J8447	Figure 1		Professional Finisher - H-Transport Assembly
P/J8448	Figure 1		Professional Finisher - H-Transport Assembly
P/J8449	Figure 1		Professional Finisher - H-Transport Assembly
P/J8450	Figure 1		Professional Finisher - H-Transport Assembly
P/J8453	Figure 1		Professional Finisher - H-Transport Assembly
P/J8460	Figure 12	2	Professional Finisher Booklet Tray Unit
P/J8461	Figure 8	12	Professional Finisher - Stacker, H-Transport PWB, LVPS

Integrated Office Finisher Plug/Jack Location List

Table 4 Integrated Office Finisher Plug/Jack Location List

Connector Number	Figure Number	Item Number	Figure Title
P/J8700	2	2	Integrated Office Finisher PWB Location
P/J8701	2	1	Integrated Office Finisher PWB Location
P/J8702	2	11	Integrated Office Finisher PWB Location
P/J8703	2	10	Integrated Office Finisher PWB Location
P/J8704	2	13	Integrated Office Finisher PWB Location
P/J8705	2	12	Integrated Office Finisher PWB Location
P/J8706	2	8	Integrated Office Finisher PWB Location
P/J8707	2	3	Integrated Office Finisher PWB Location
P/J8708	2	17	Integrated Office Finisher PWB Location
P/J8709	2	16	Integrated Office Finisher PWB Location
P/J8710	2	9	Integrated Office Finisher PWB Location
P/J8711	2	4	Integrated Office Finisher PWB Location
P/J8721	3	2	Integrated Office Finisher Bottom Location
P/J8722	3	1	Integrated Office Finisher Bottom Location
P/J8723	3	6	Integrated Office Finisher Bottom Location
P/J8724	1	1	Integrated Office Finisher Front Location
P/J8725	3	11	Integrated Office Finisher Bottom Location
P/J8726	1	7	Integrated Office Finisher Front Location
P/J8727	1	9	Integrated Office Finisher Front Location
P/J8728	1	8	Integrated Office Finisher Front Location
P/J8729	1	6	Integrated Office Finisher Front Location
P/J8730	1	2	Integrated Office Finisher Front Location
P/J8731	1	4	Integrated Office Finisher Front Location
P/J8732	1	3	Integrated Office Finisher Front Location
P/J8733	2	14	Integrated Office Finisher PWB Location
P/J8734	2	15	Integrated Office Finisher PWB Location
P/J8735	1	5	Integrated Office Finisher Front Location
P/J8736	3	5	Integrated Office Finisher Bottom Location
J8737A	3	9	Integrated Office Finisher Bottom Location
J8737B	3	9	Integrated Office Finisher Bottom Location
J8738A	3	10	Integrated Office Finisher Bottom Location
J8738B	3	10	Integrated Office Finisher Bottom Location
P/J8739	2	7	Integrated Office Finisher PWB Location
P/J8740	2	5	Integrated Office Finisher PWB Location
P/J8741	2	6	Integrated Office Finisher PWB Location
J8742A	3	7	Integrated Office Finisher Bottom Location
J8742B	3	8	Integrated Office Finisher Bottom Location
CN3	3	4	Integrated Office Finisher Bottom Location

Table 4 Integrated Office Finisher Plug/Jack Location List

Connector Number	Figure Number	Item Number	Figure Title
CN4	3	3	Integrated Office Finisher Bottom Location

Office Finisher LX Plug/Jack Location List

Table 5 Office Finisher (LX) Plug/Jack List

Connector Number	Figure Number	Item Number	Figure Title
P/J590	3	15	Finisher (LX) Rear
P/J591	3	14	Finisher (LX) Rear
J8860	1	1	Finisher (LX) Horizontal Transport
J8861	1	4	Finisher (LX) Horizontal Transport
P/J8862	1	2	Finisher (LX) Horizontal Transport
J8863	1	7	Finisher (LX) Horizontal Transport
P8863	1	5	Finisher (LX) Horizontal Transport
J8864	1	8	Finisher (LX) Horizontal Transport
J8865	1	10	Finisher (LX) Horizontal Transport
J8866	1	6	Finisher (LX) Horizontal Transport
P/J8867	1	9	Finisher (LX) Horizontal Transport
J8868	4	4	Finisher (LX) Eject
J8869	4	3	Finisher (LX) Eject
J8870	3	24	Finisher (LX) Rear
J8871	3	23	Finisher (LX) Rear
J8872	3	21	Finisher (LX) Rear
J8873	3	2	Finisher (LX) Rear
J8874	3	1	Finisher (LX) Rear
J8875	3	22	Finisher (LX) Rear
P/J8876	4	5	Finisher (LX) Eject
P/J8877	3	20	Finisher (LX) Rear
P/J8878	3	7	Finisher (LX) Rear
P/J8879	3	5	Finisher (LX) Rear
J8880	4	7	Finisher (LX) Eject
J8881	4	11	Finisher (LX) Eject
J8882	4	6	Finisher (LX) Eject
P/J8883	4	8	Finisher (LX) Eject
P/J8884	4	10	Finisher (LX) Eject
J8885	2	7	Finisher (LX) Front
J8886	2	6	Finisher (LX) Front
J8887	2	5	Finisher (LX) Front
P/J8888	4	9	Finisher (LX) Eject
J8889	3	3	Finisher (LX) Rear

Table 5 Office Finisher (LX) Plug/Jack List

Connector Number	Figure Number	Item Number	Figure Title
J8890	3	4	Finisher (LX) Rear
J8891	4	2	Finisher (LX) Eject
P/J8892	5	1	Booklet Maker Stapler Assembly
P/J8893	5	2	Booklet Maker Stapler Assembly
J8894	6	1	Booklet Maker PWB
J8895	6	3	Booklet Maker PWB
P/J8896	5	7	Booklet Maker Stapler Assembly
J8897	5	4	Booklet Maker Stapler Assembly
J8898	5	5	Booklet Maker Stapler Assembly
J8899	5	6	Booklet Maker Stapler Assembly
J8900	5	8	Booklet Maker Stapler Assembly
J8901	5	3	Booklet Maker Stapler Assembly
P/J8903	2	2	Finisher (LX) Front
P8903	4	1	Finisher (LX) Eject
J8904	2	3	Finisher (LX) Front
P/J8905	2	4	Finisher (LX) Front
P/J8906	6	2	Booklet Maker PWB
J8980	3	19	Finisher (LX) Rear
P/J8981	3	10	Finisher (LX) Rear
J8982	3	18	Finisher (LX) Rear
P/J8983	3	9	Finisher (LX) Rear
J8984	3	6	Finisher (LX) Rear
J8985	6	4	Booklet Maker PWB
P8985	3	17	Finisher (LX) Rear
P/J8986	3	8	Finisher (LX) Rear
J8987	1	3	Finisher (LX) Horizontal Transport
P8987	3	16	Finisher (LX) Rear
P/J8988	3	11	Finisher (LX) Rear
J8989	3	13	Finisher (LX) Rear
P/J8990	3	12	Finisher (LX) Rear
P/J8991	6	9	Booklet Maker PWB
P/J8992	6	7	Booklet Maker PWB
P/J8993	6	6	Booklet Maker PWB
P/J8994	6	5	Booklet Maker PWB
P/J8995	6	8	Booklet Maker PWB

IOT Plug/Jack Illustrations

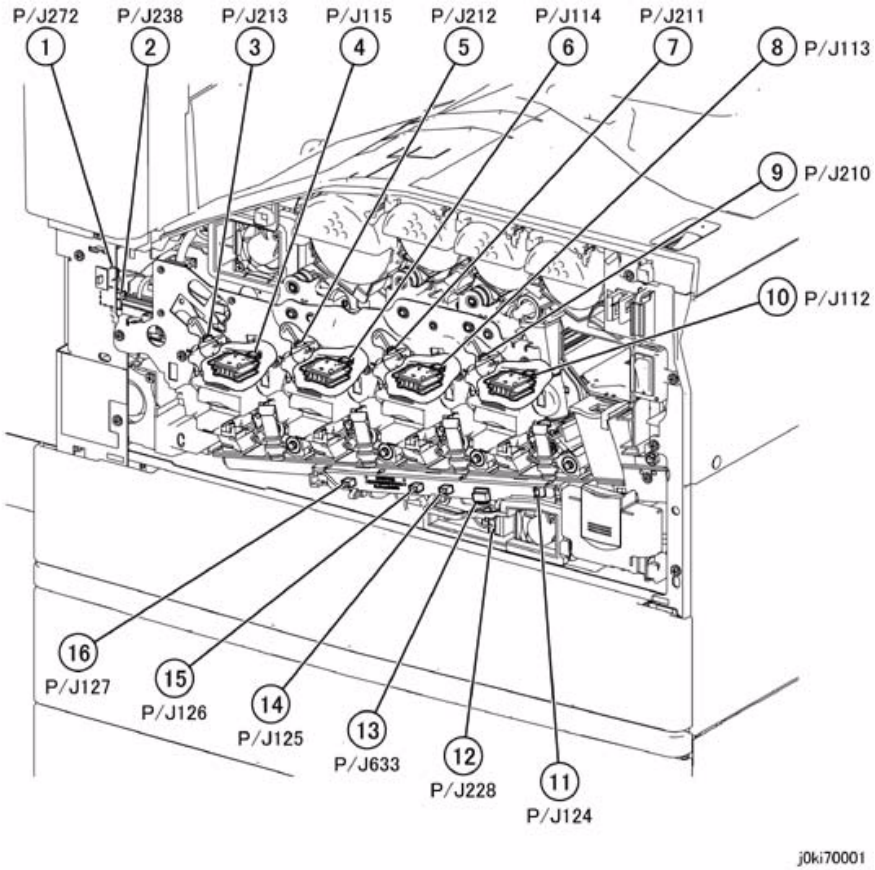

Figure 1 Front Xerographics

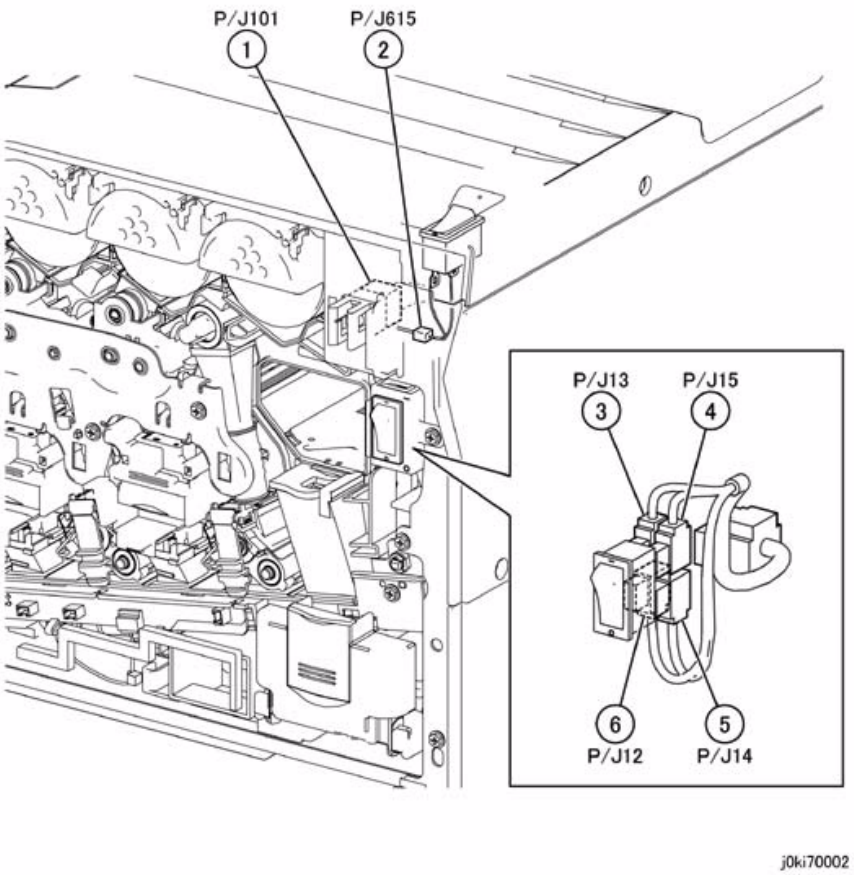

Figure 2 Main Power/Front Cover Interlock Switch

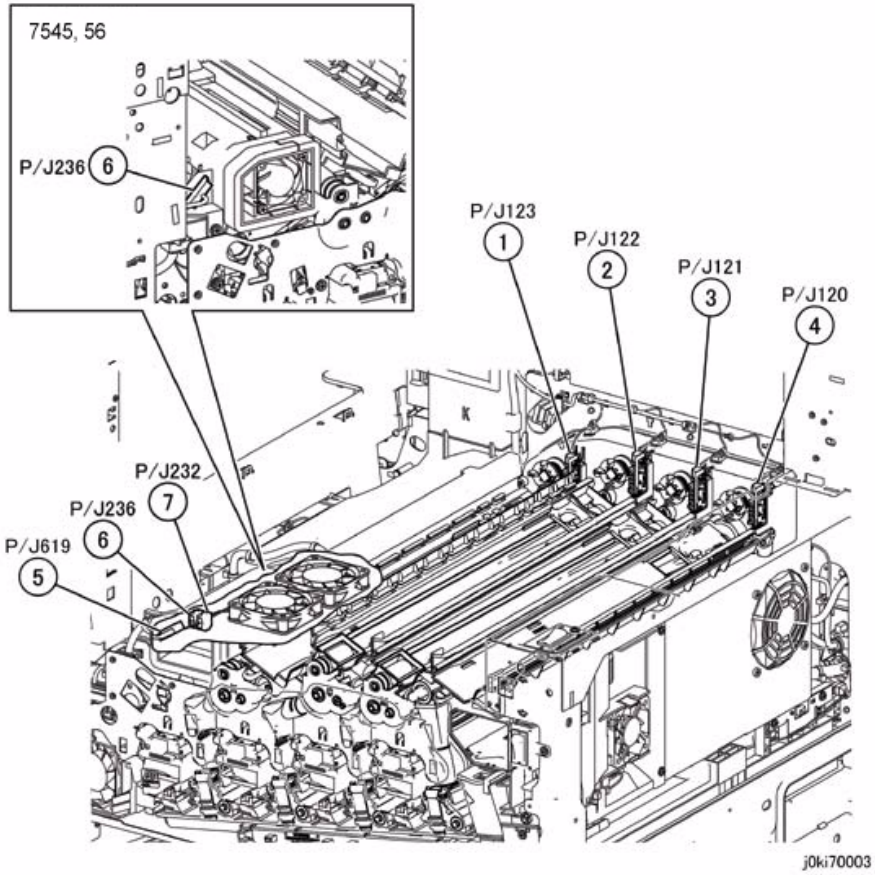

Figure 3 Toner CRUM Coupler, IBT Fan 1/2

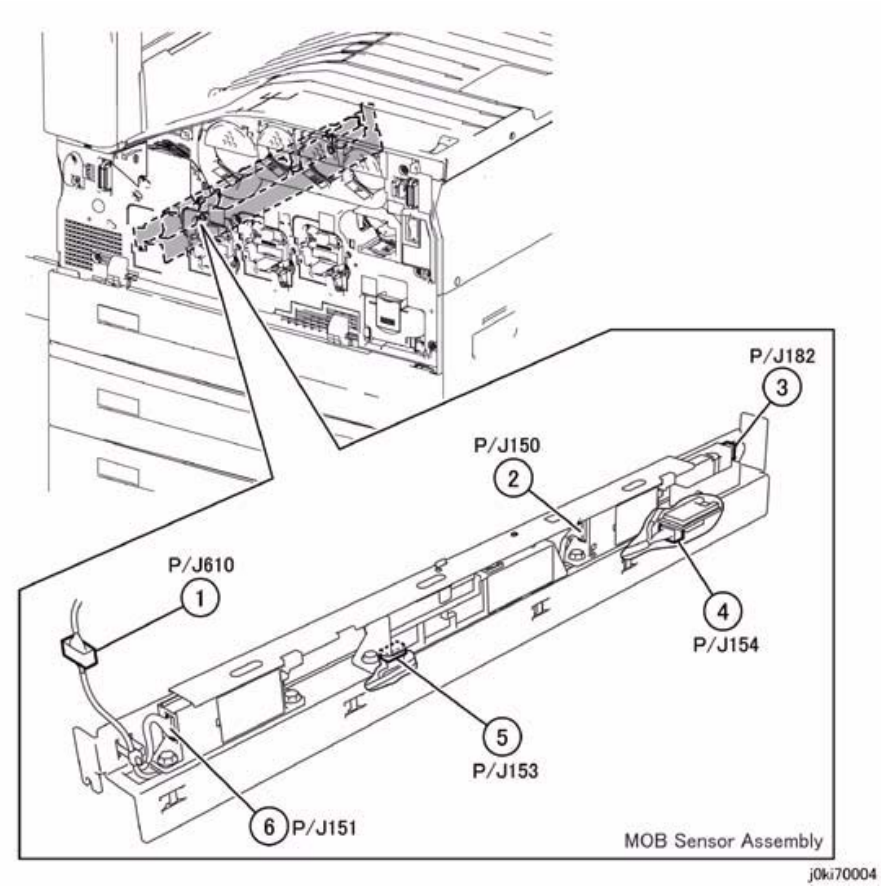

Figure 4 MOB ADC Assembly

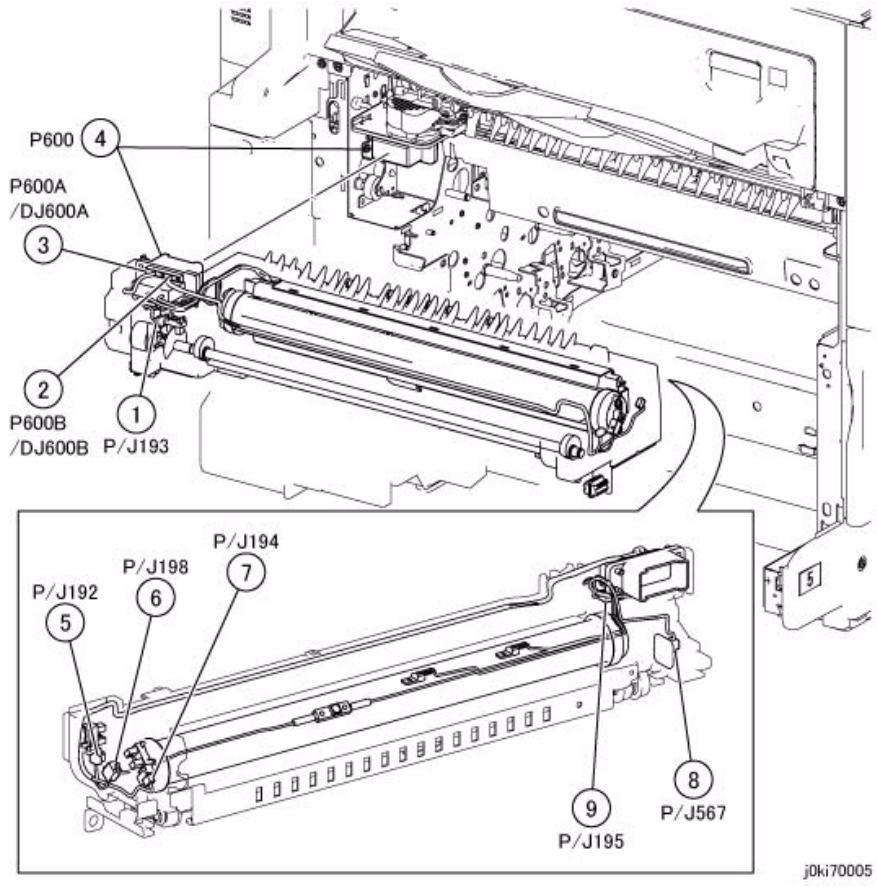

Figure 5 Fuser

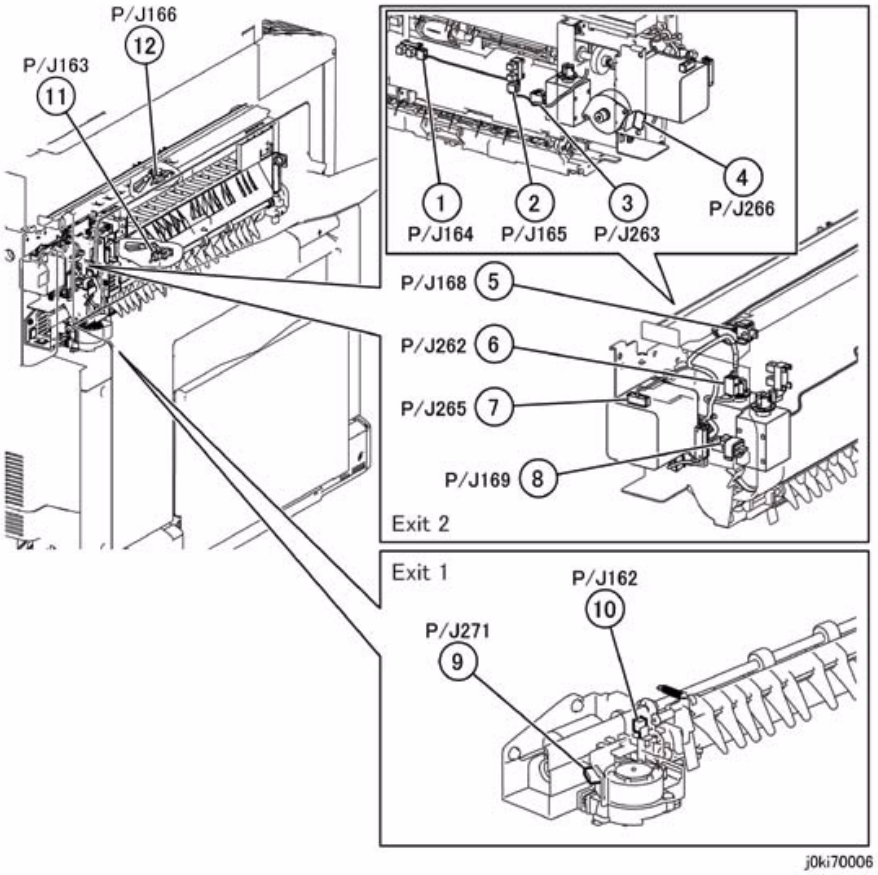

Figure 6 Exit

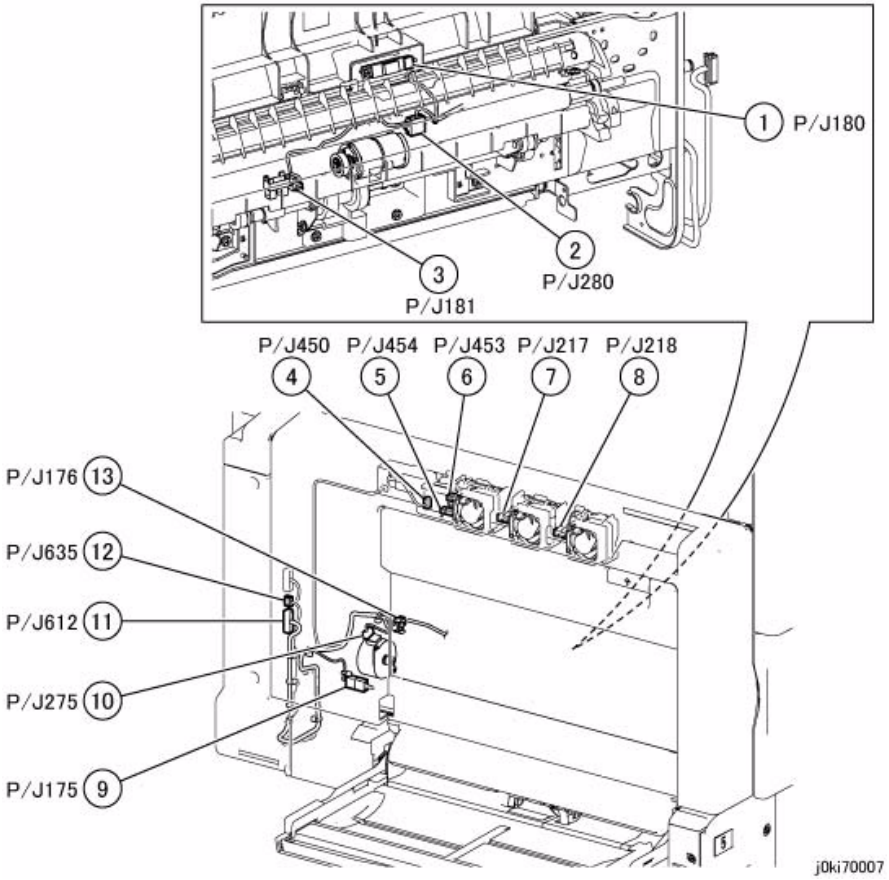

Figure 7 L/H Cover

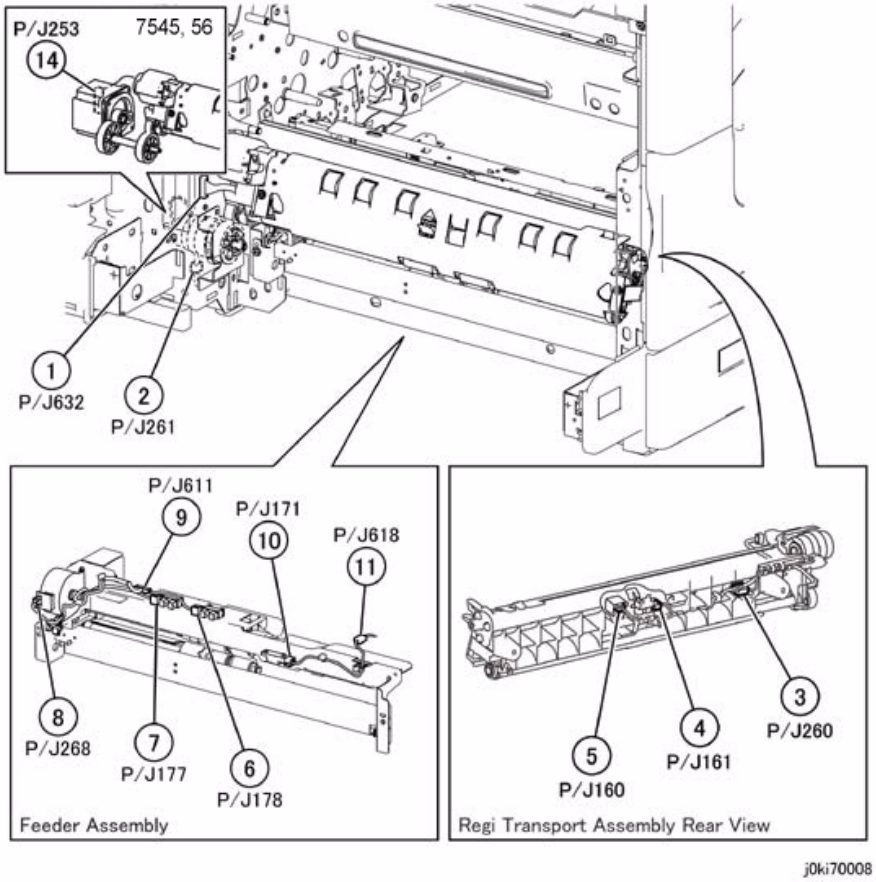

Figure 8 IOT Paper Feed / Transport

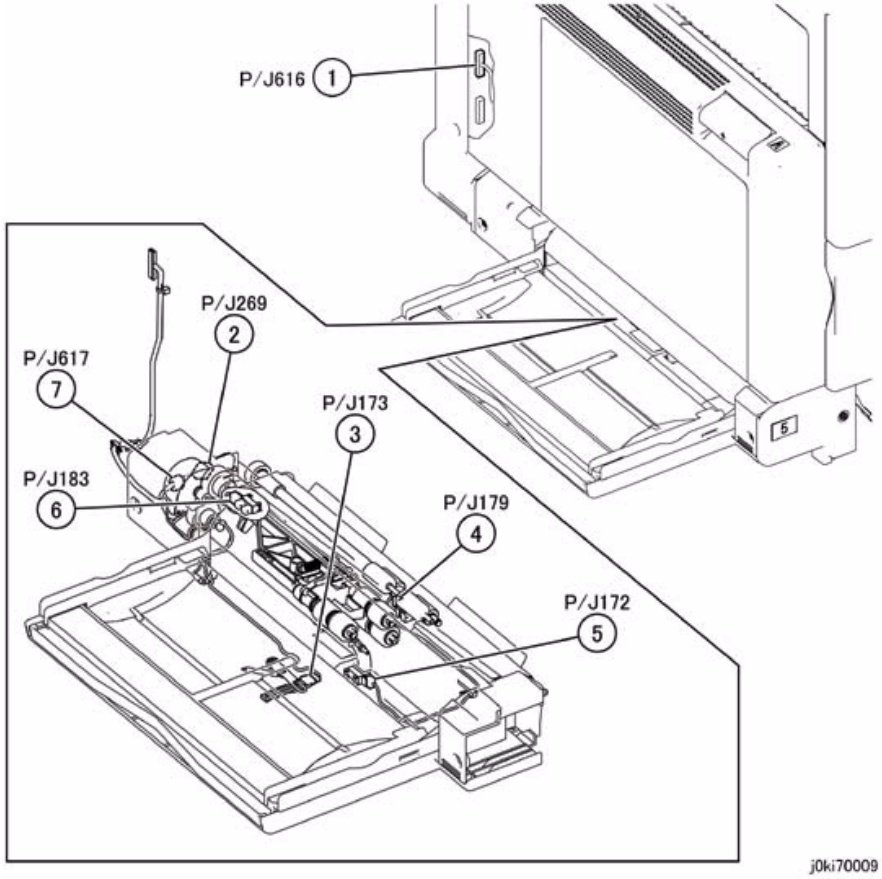

Figure 9 Bypass Tray

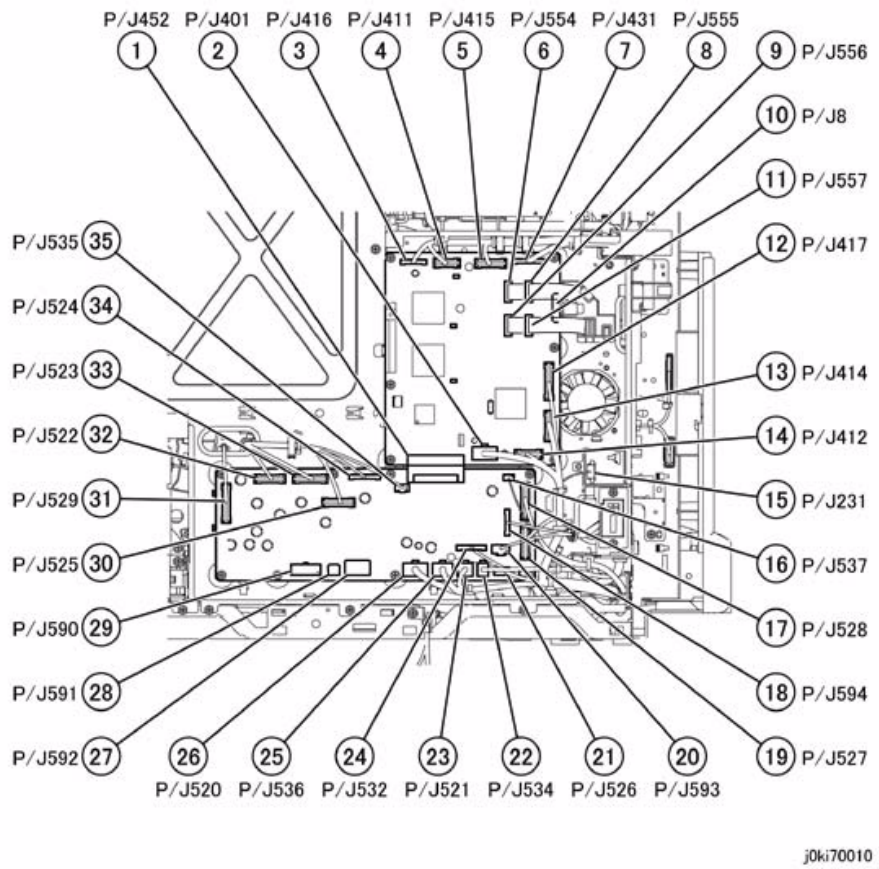

Figure 10 MCU/MD PWB

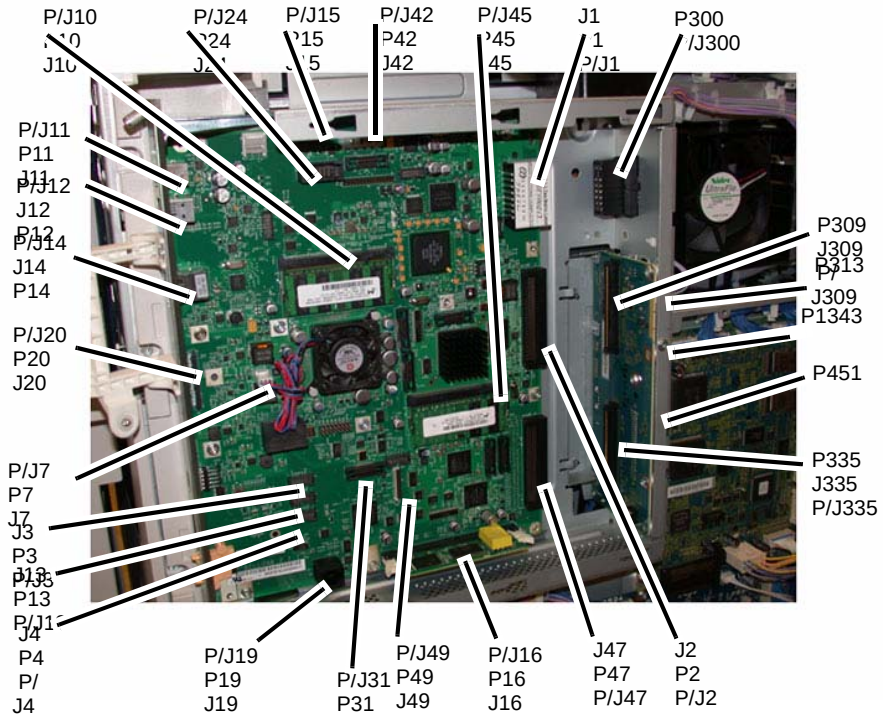

Figure 11 SBC

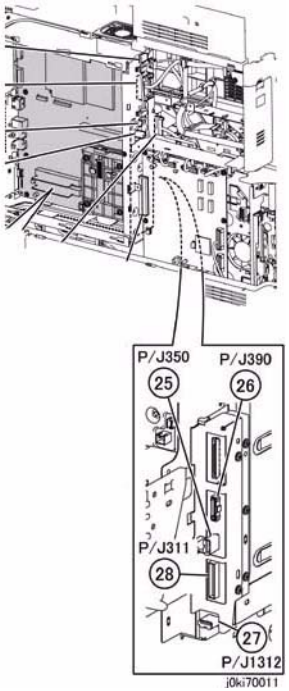

Figure 12 Backplane

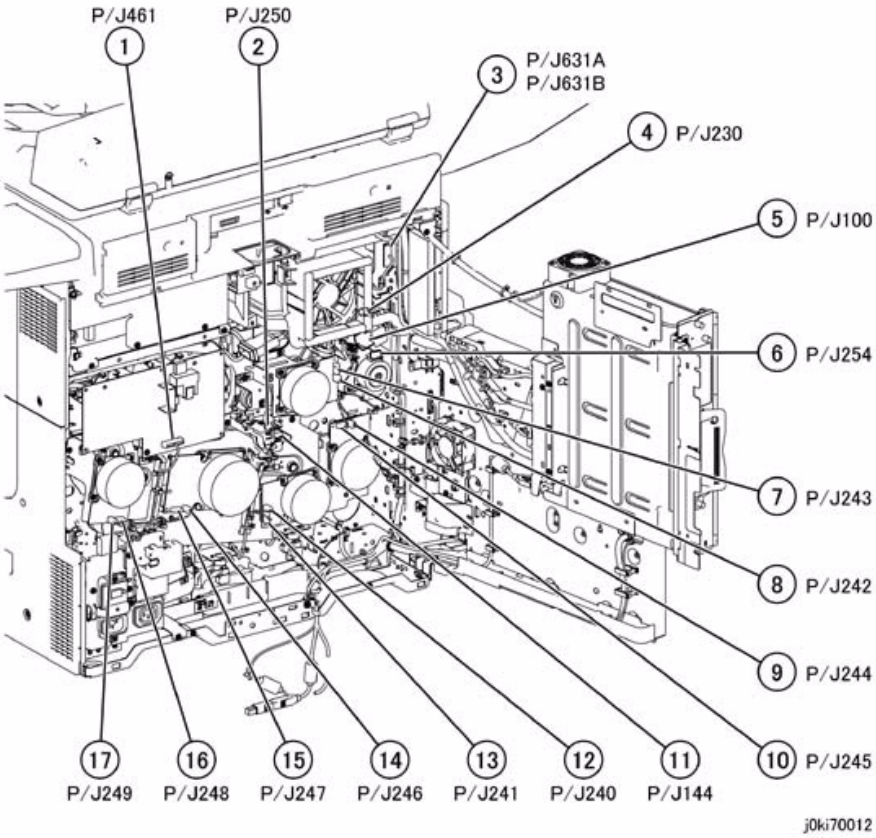

Figure 13 IOT Rear Location

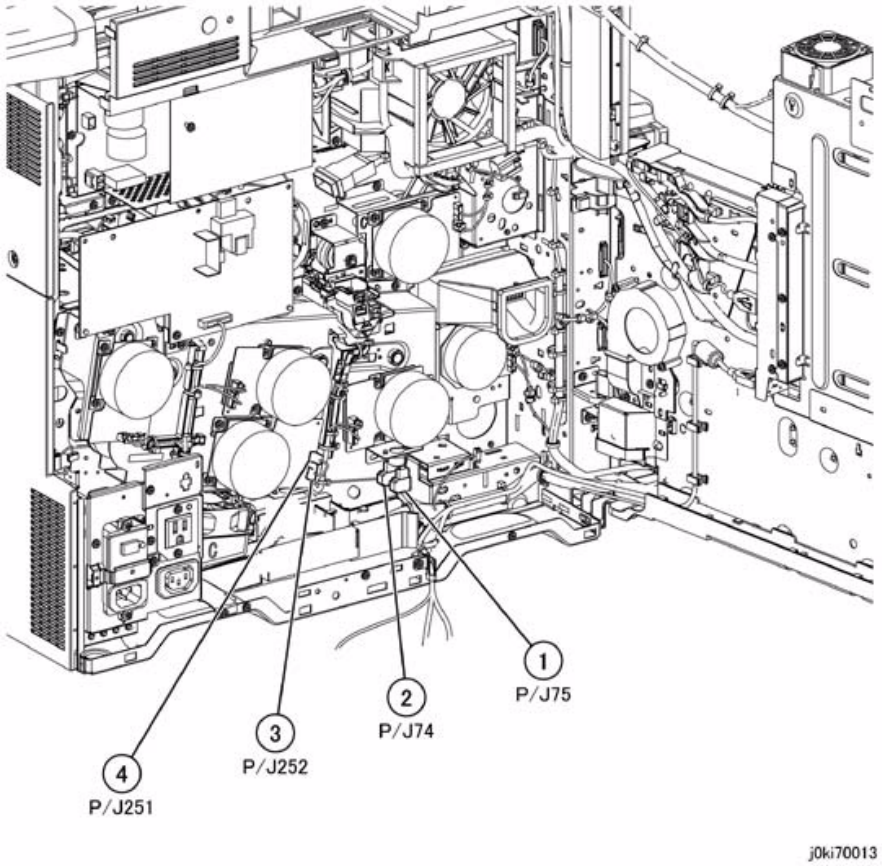

Figure 14 Dev. Drive Motor (7545/56) Thermostat

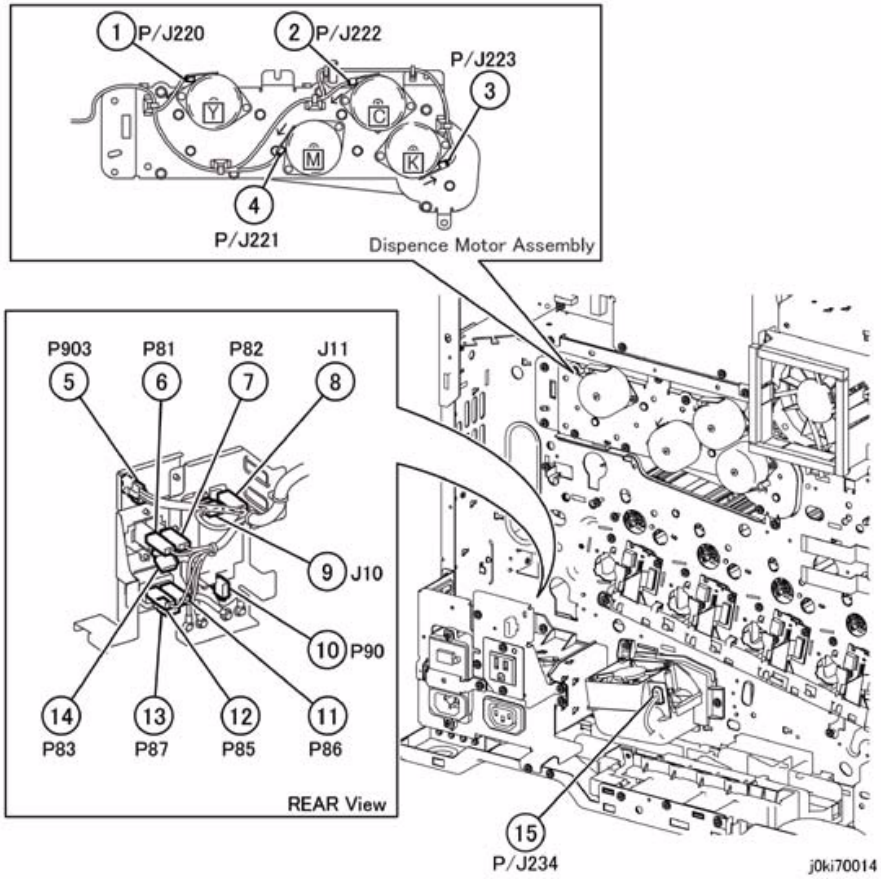

Figure 15 Toner Dispense Motor (Y,M,C,K), GFI Chassis, Bottom Fan

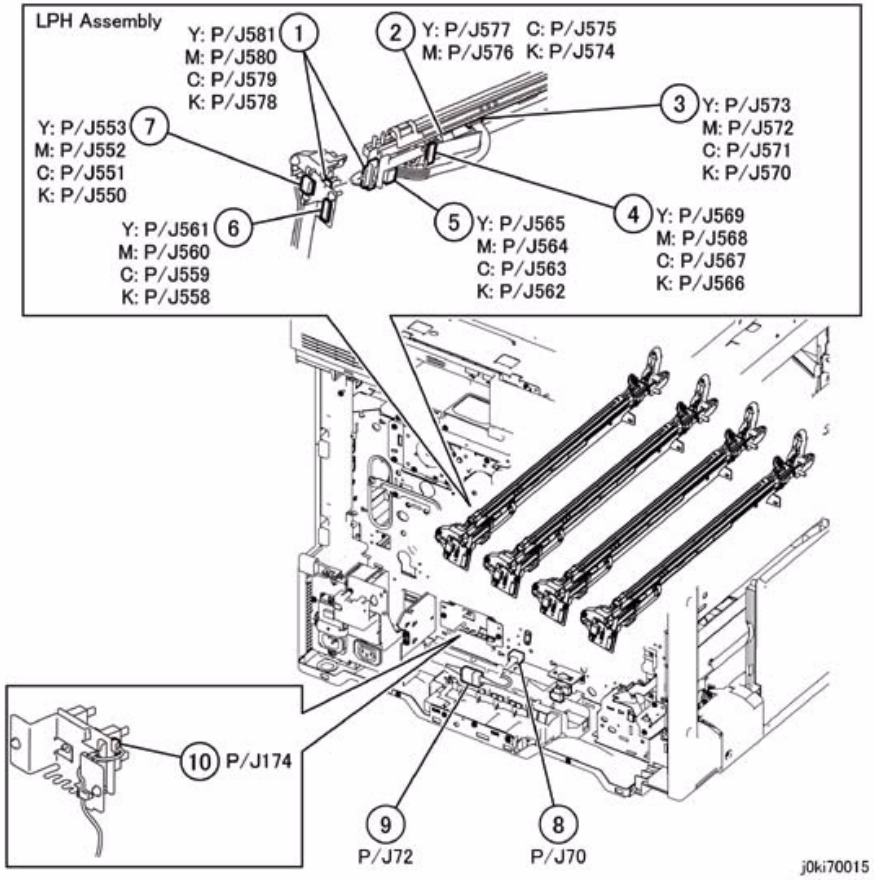

Figure 16 LPH Unit, Tray1 Paper Size Sensor, IOT Heater

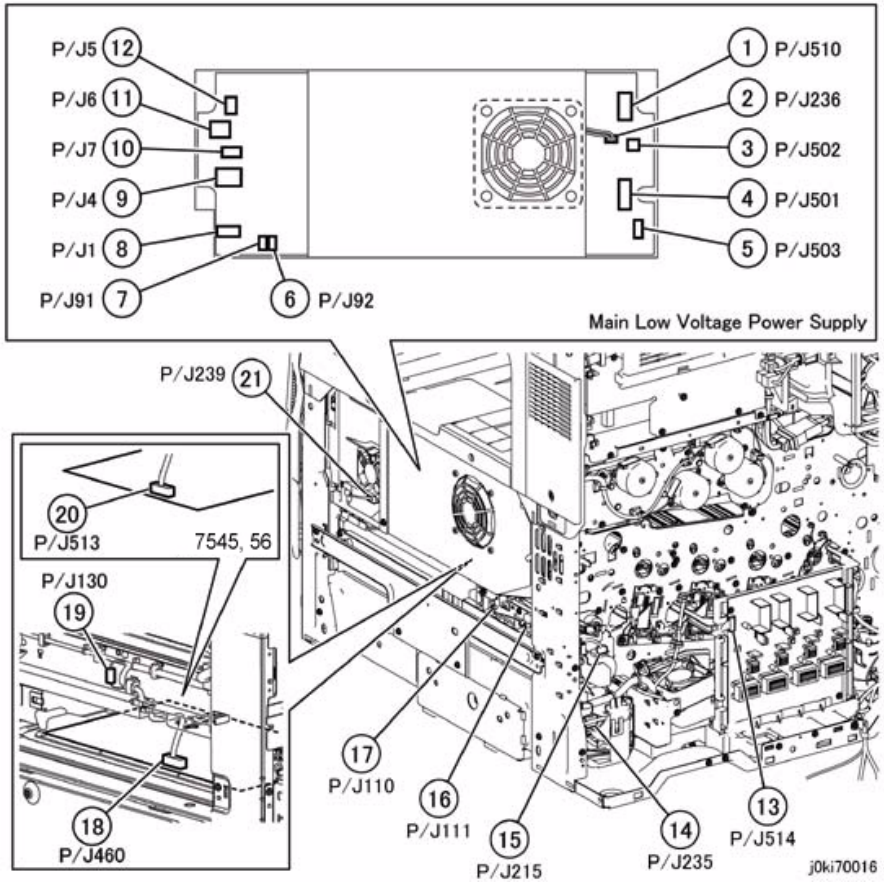

Figure 17 Main LVPS, HVPS (DEV/BCR), Agitator Motor

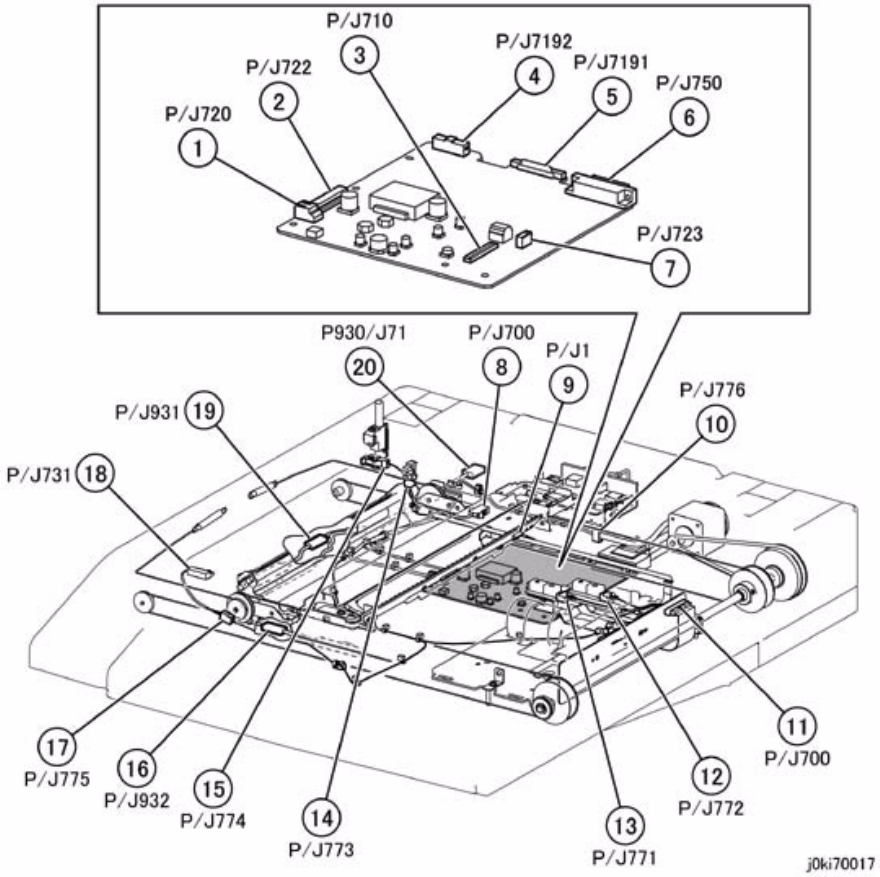

Figure 18 IIT

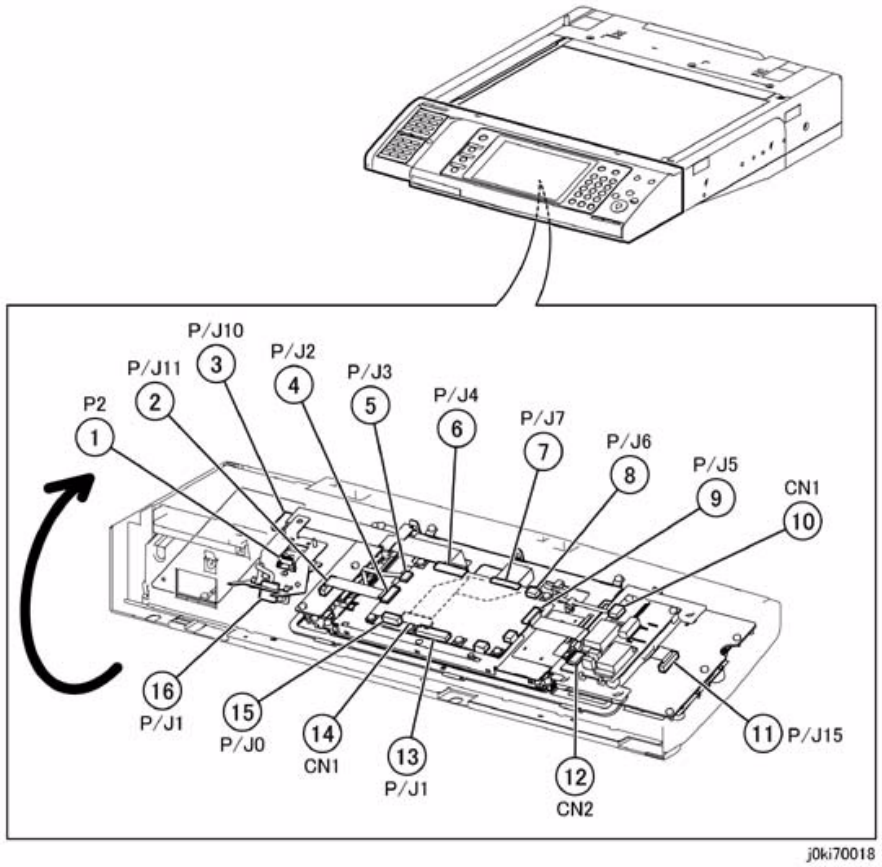

Figure 19 MCW Control Panel

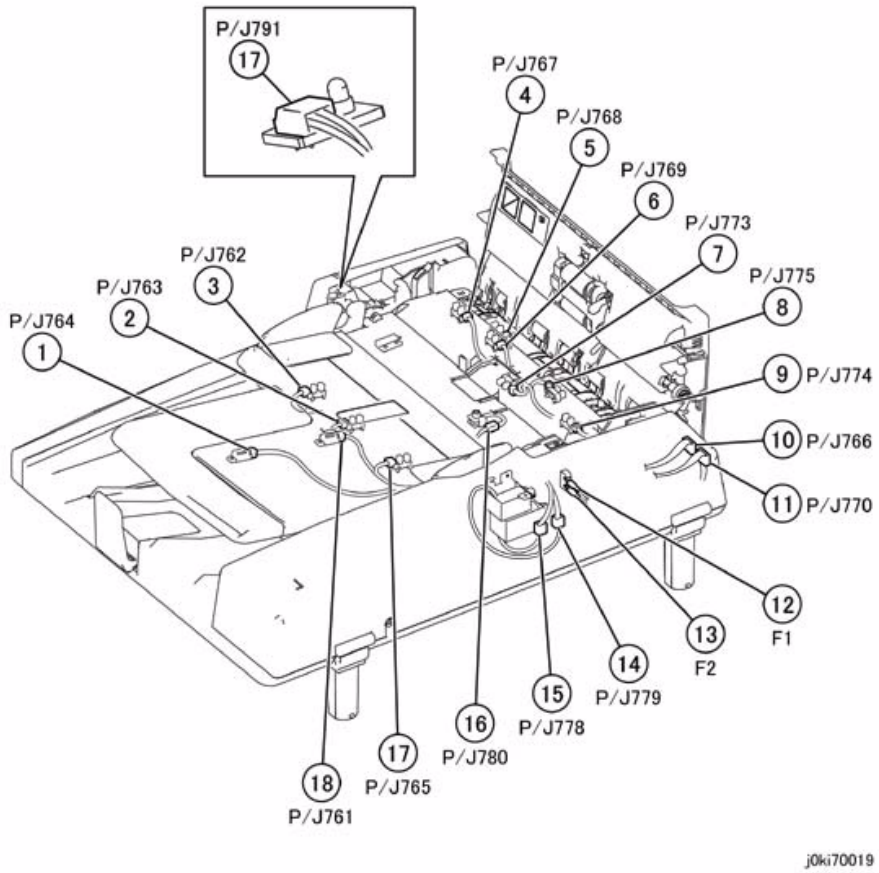

Figure 20 DADF Rear Location

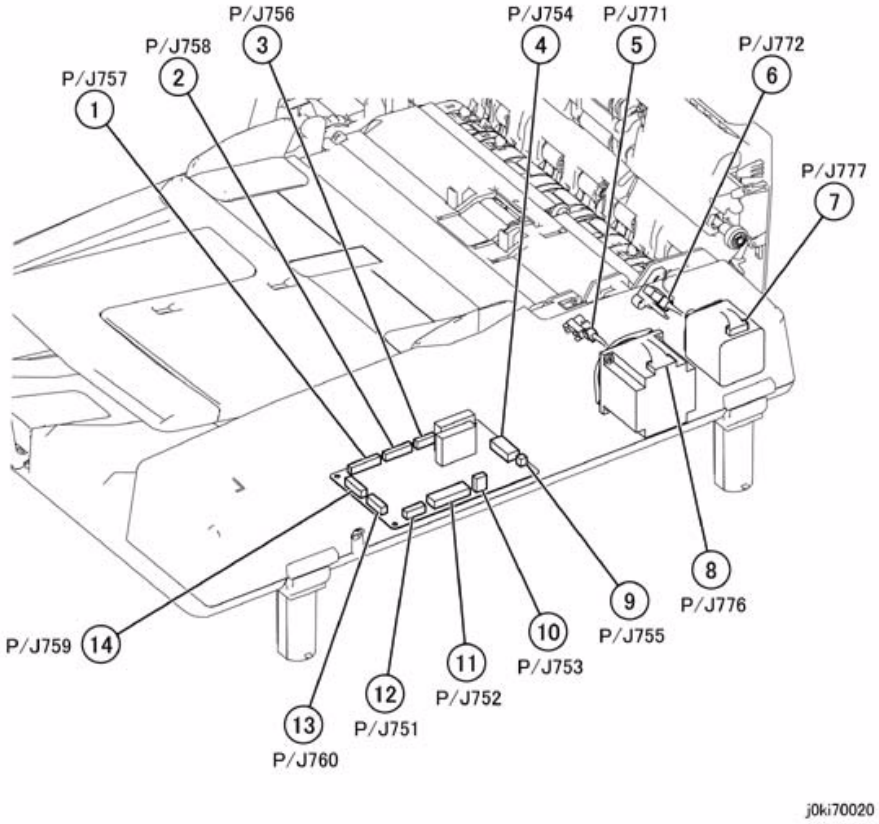

Figure 21 DADF PWB

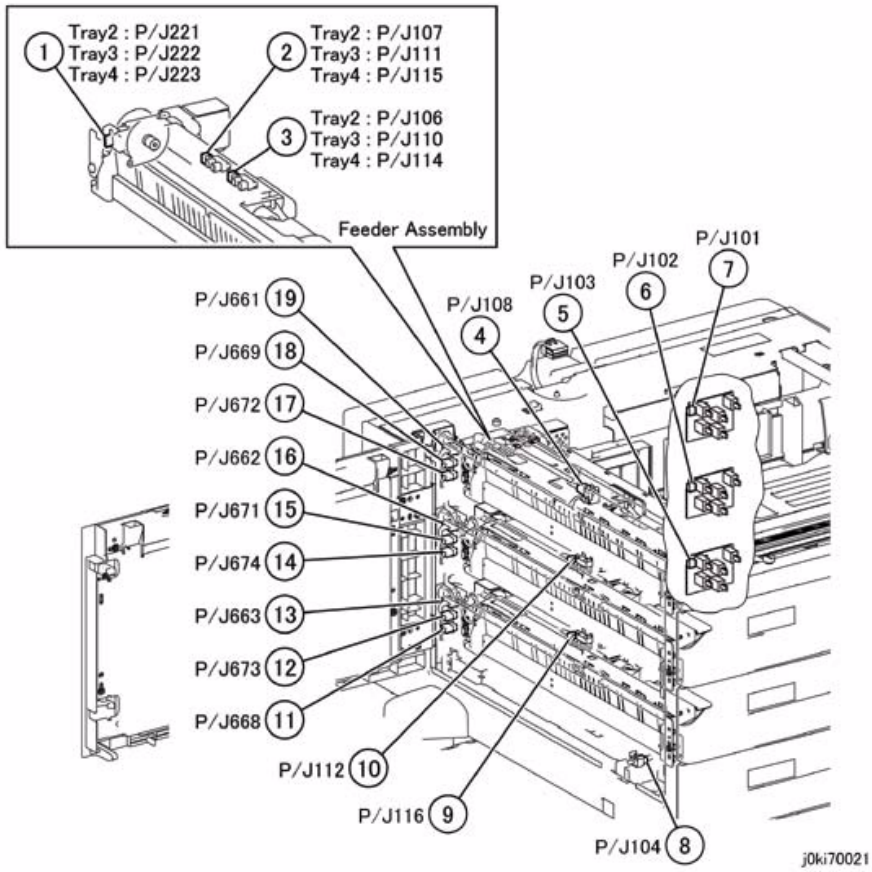

Figure 22 3T Module - Tray2/3/4 Feeder, Feed Out Sensor, Paper Size Sensor

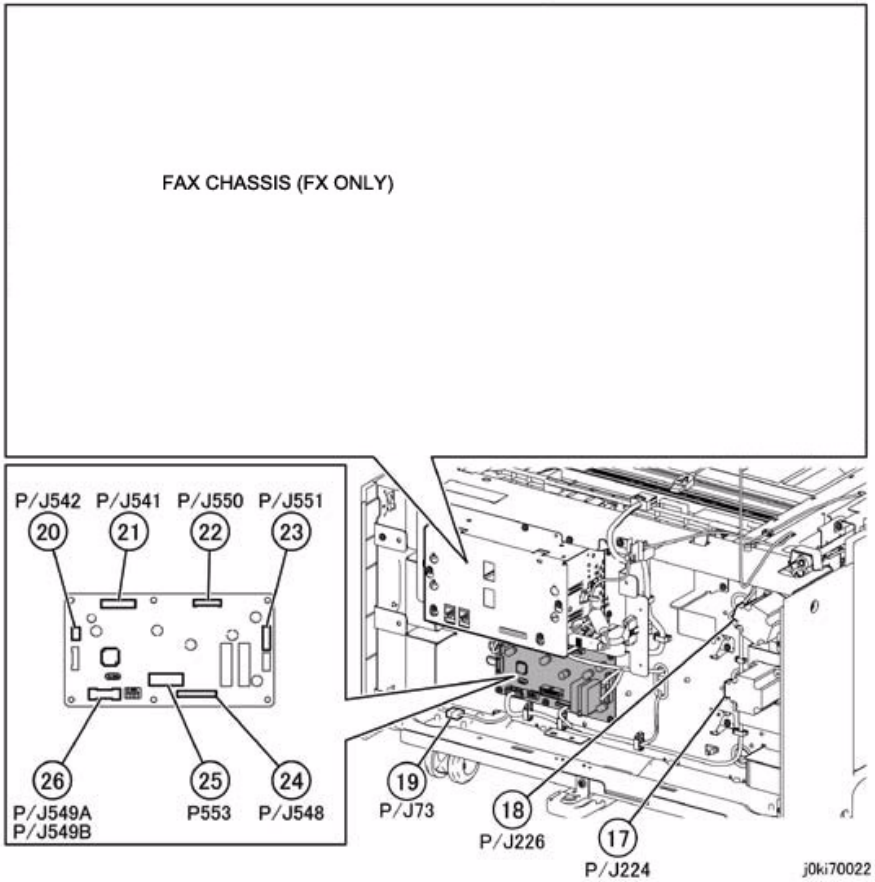

Figure 23 3T Module - Tray Module PWB, TM Take Away Motor

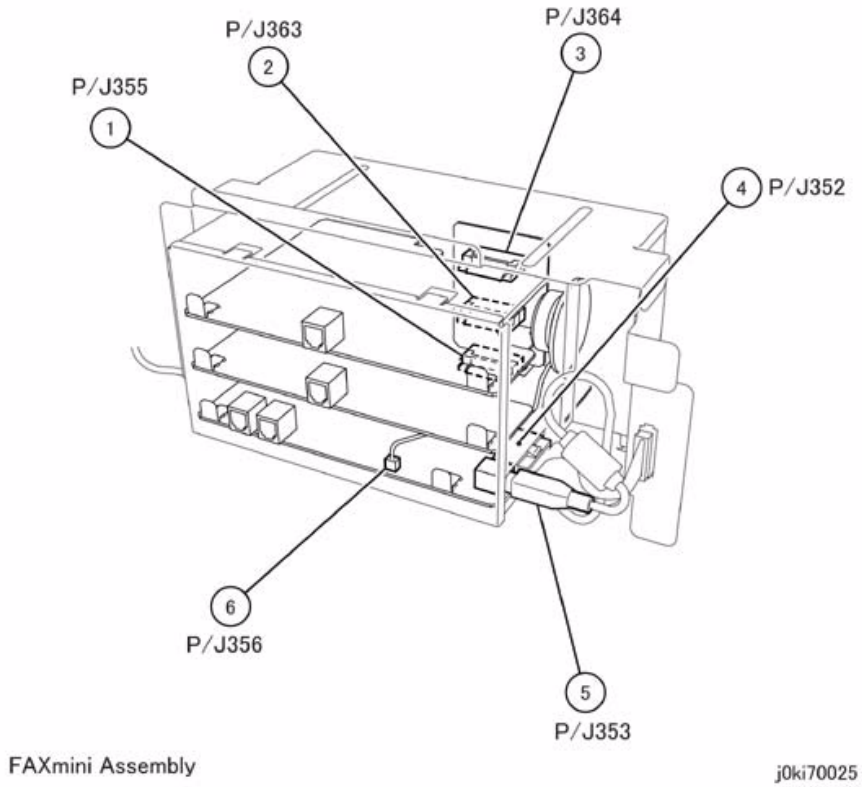

Figure 24 FAX mini (FX only)

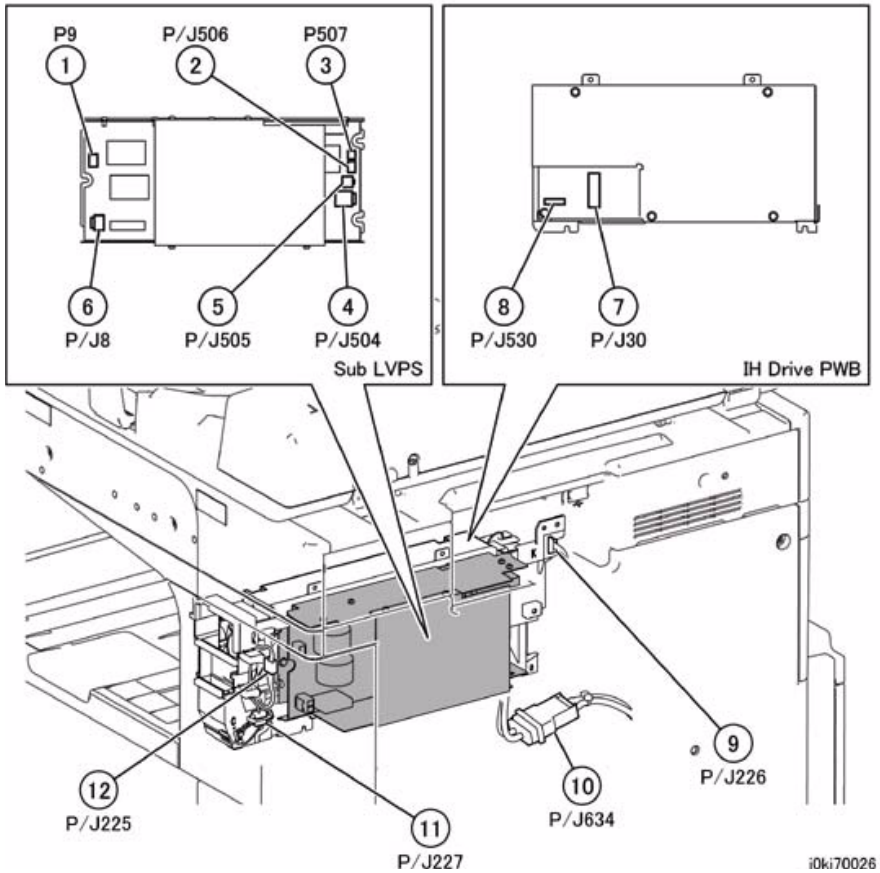

Figure 25 IH PWB, Sub LVPS

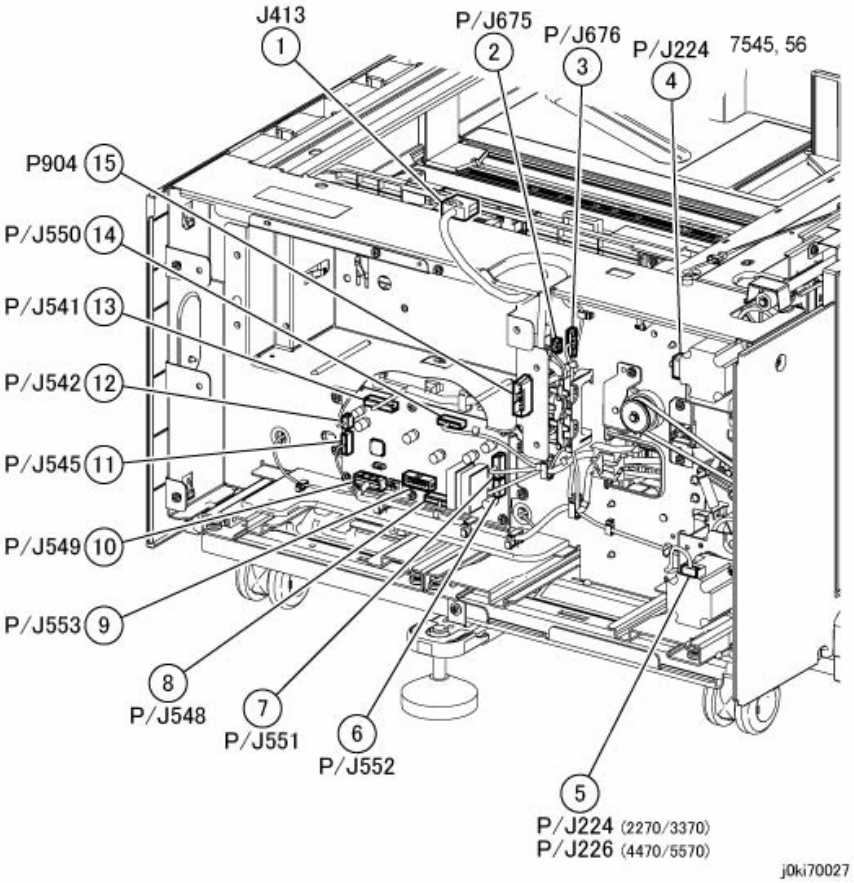

Figure 26 TT Module - Rear Location

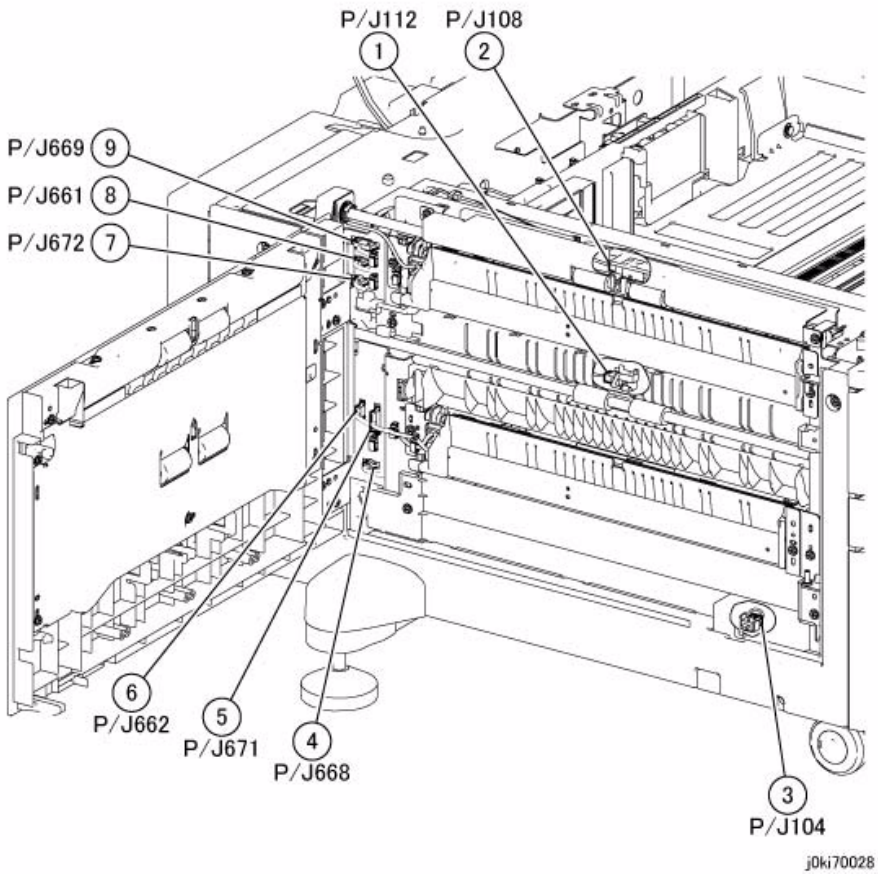

Figure 27 TT Module - Left Location

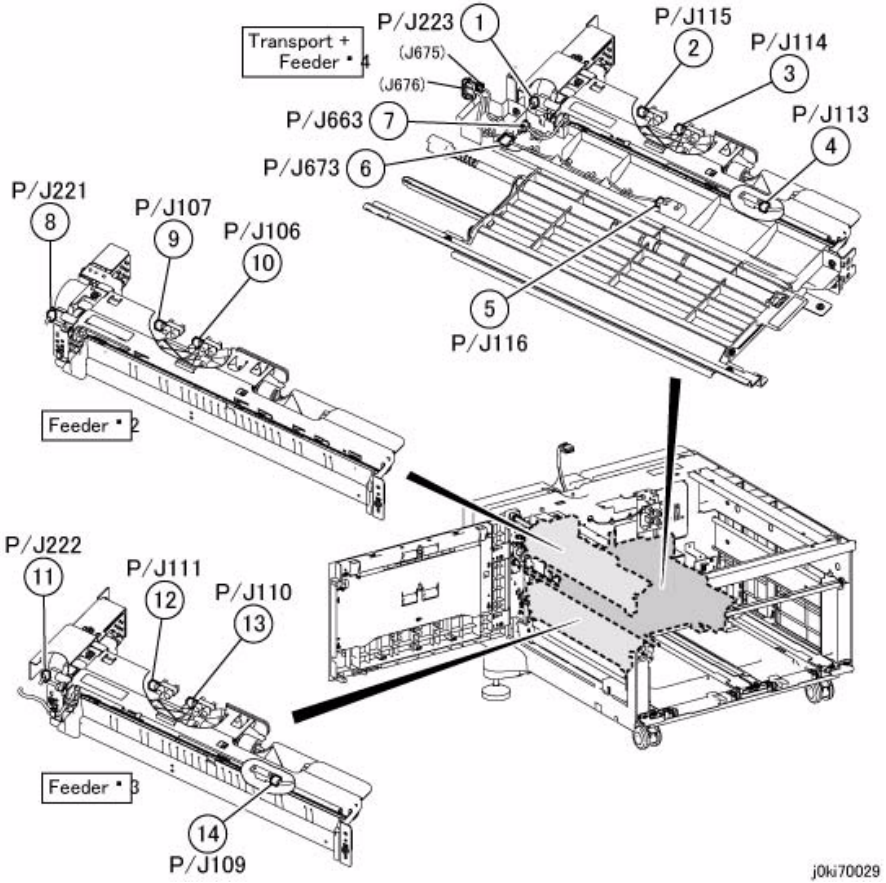

Figure 28 TT Module - Tray 2/3/4 Feeder

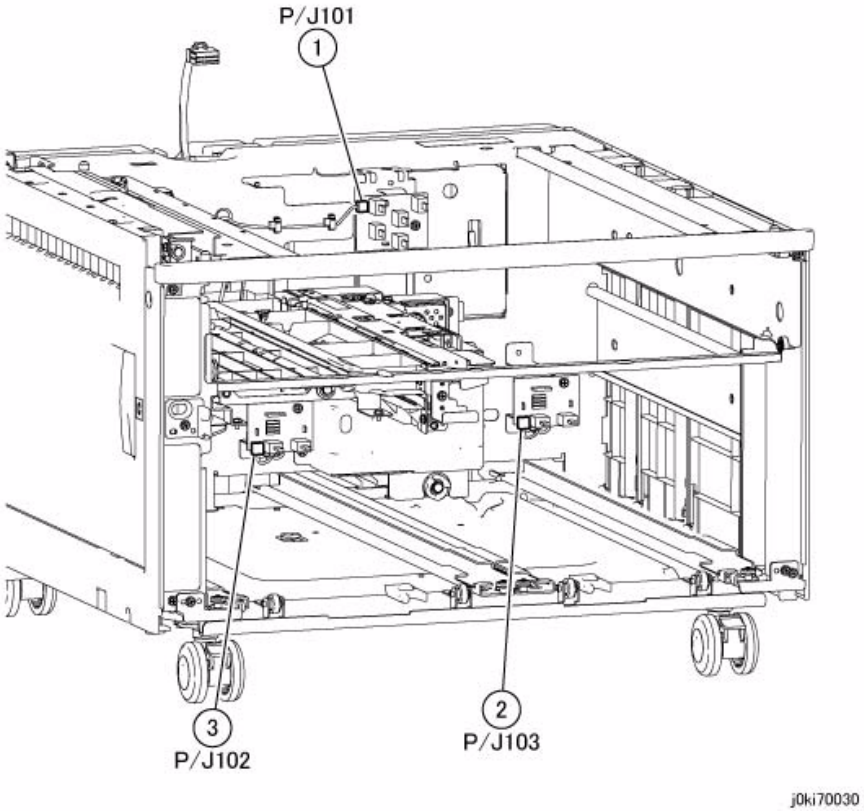

Figure 29 TT Module - Tray 2/3/4 Paper Size Sensor

HCF Plug/Jack Illustrations

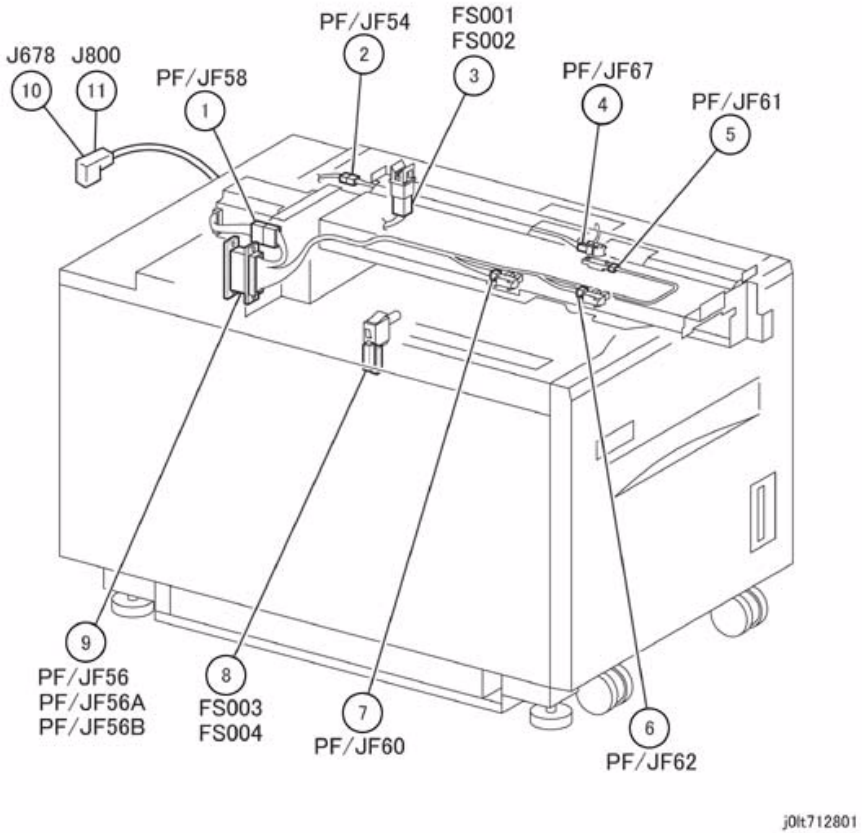

Figure 1 HCF 1 of 2

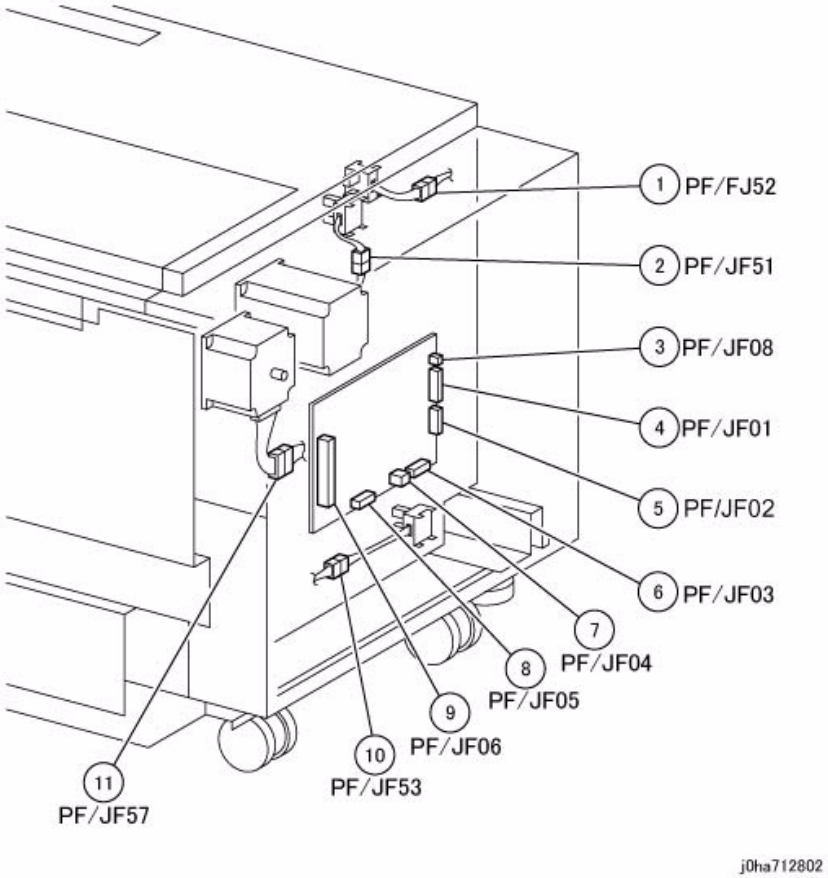

Figure 2 HCF 2 of 2

Professional Finisher Plug/Jack Illustrations

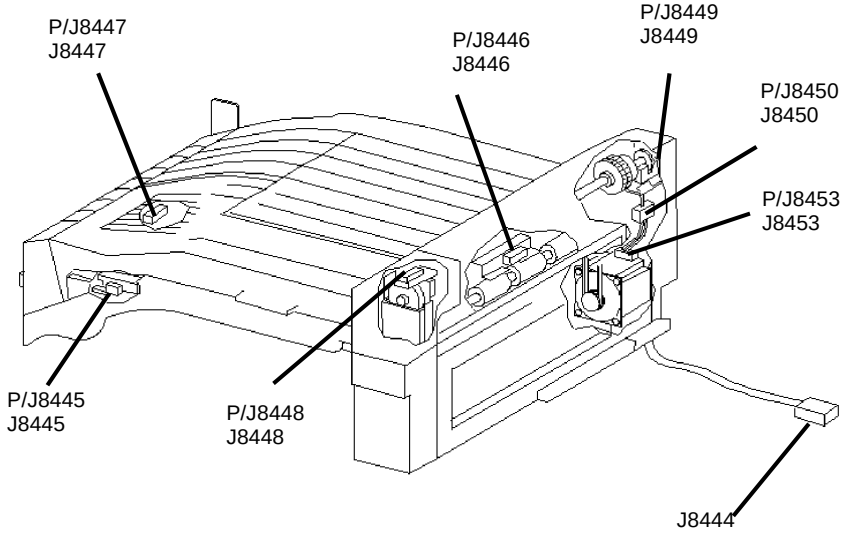

Figure 1 Professional Finisher - H-Transport Assembly

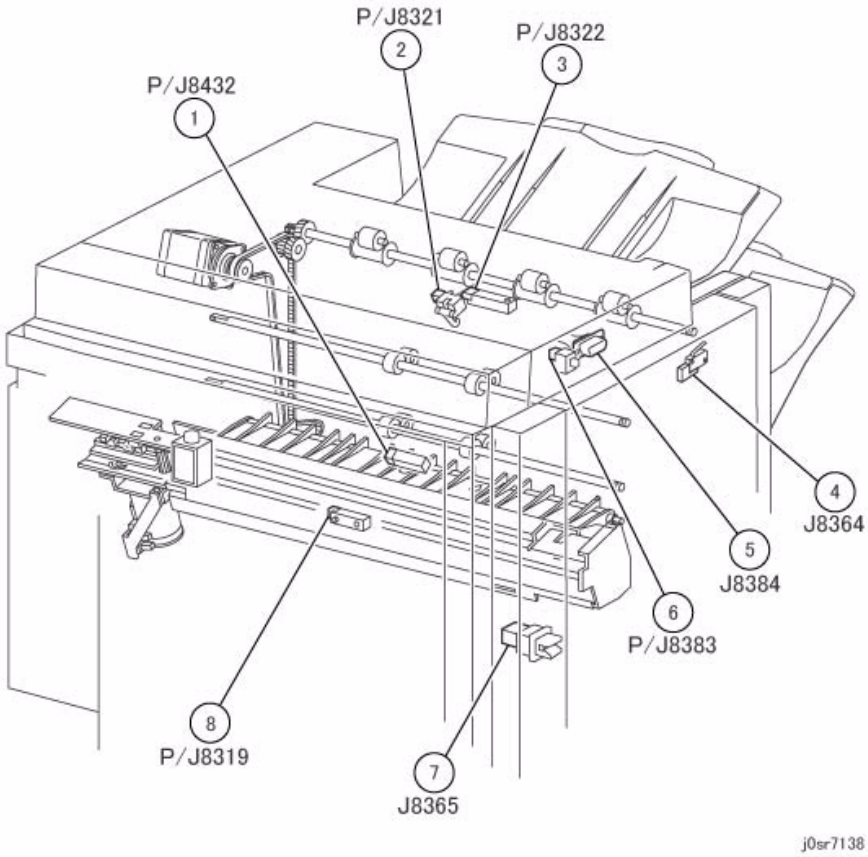

Figure 2 Professional Finisher - Top Tray Exit Sensor, Gate Sensor

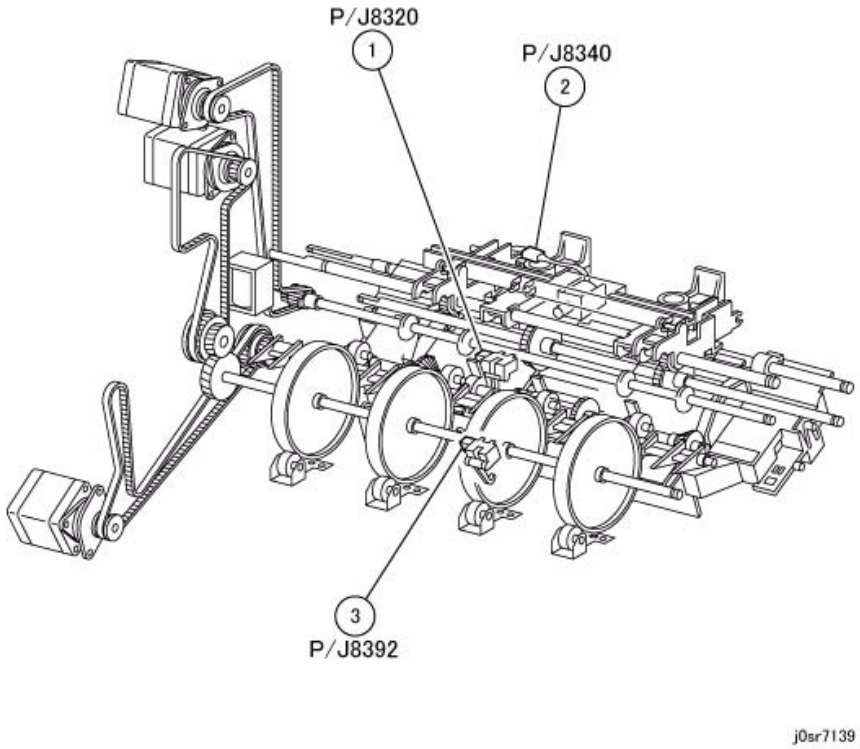

Figure 3 Professional Finisher - Compiler Exit Sensor, Buffer Path Sensor

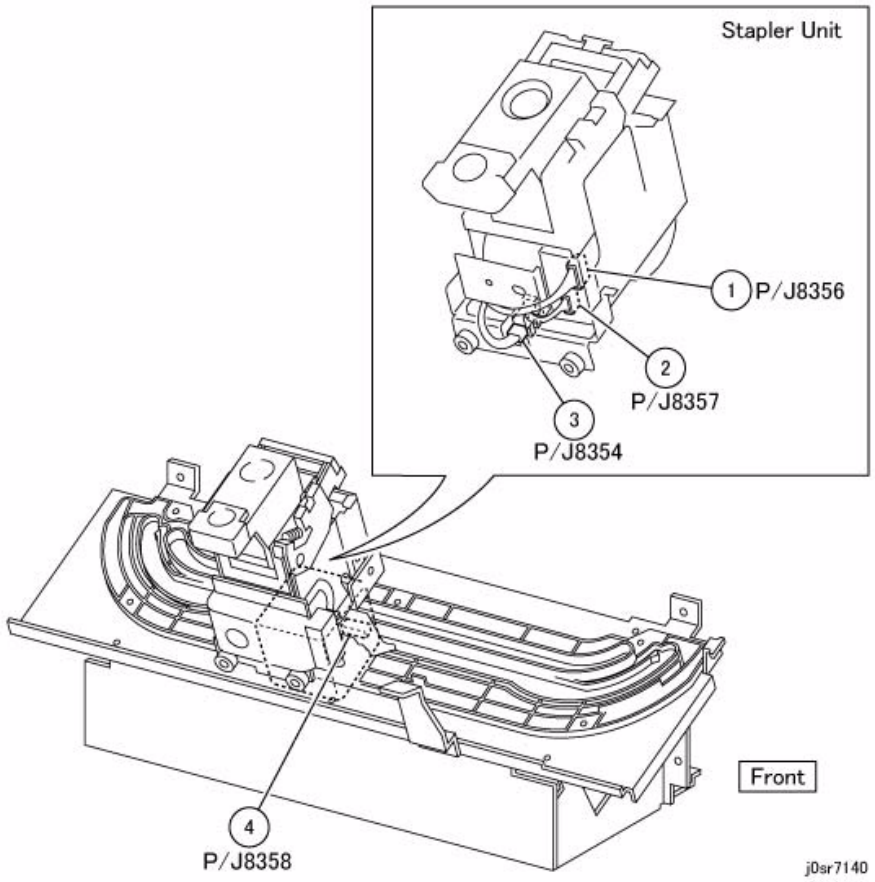

Figure 4 Professional Finisher - Stapler Unit

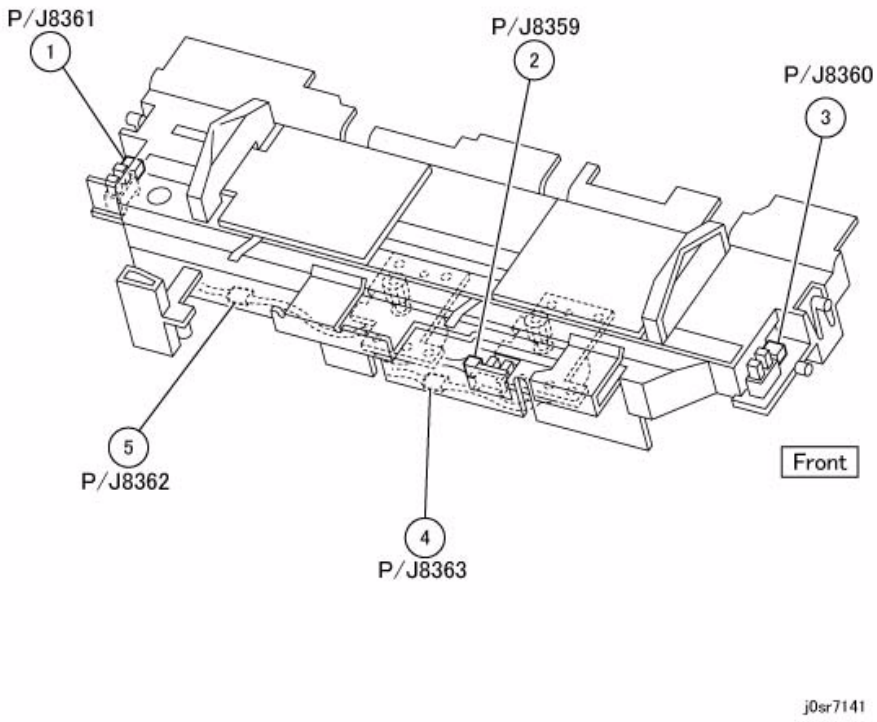

Figure 5 Professional Finisher - Compile Tray Assembly

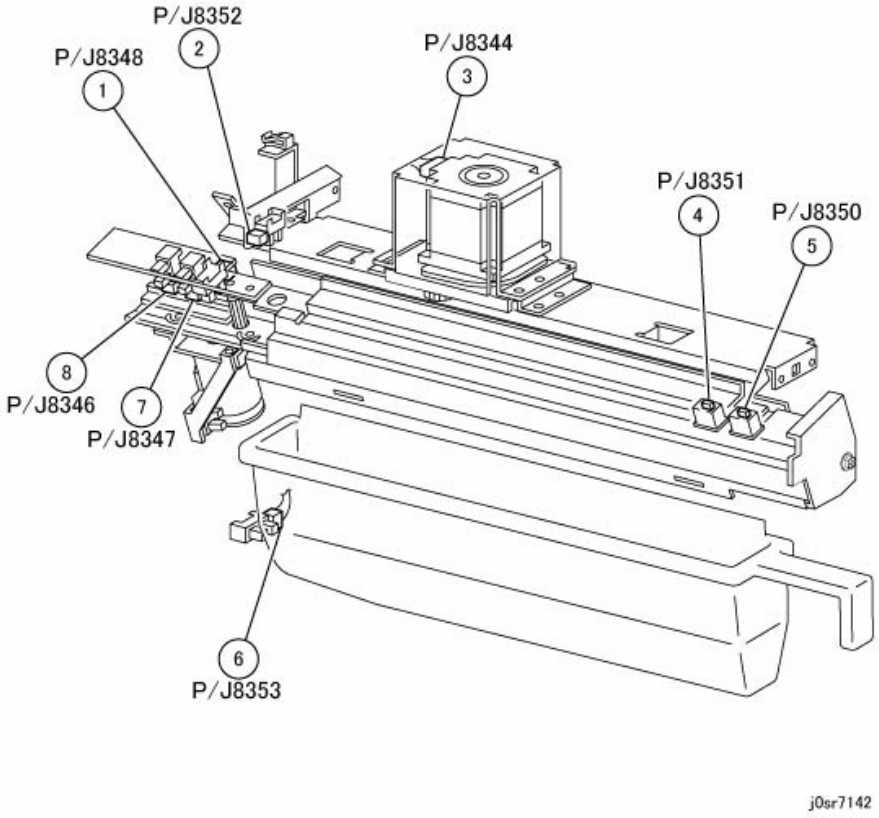

Figure 6 Professional Finisher - Puncher Unit

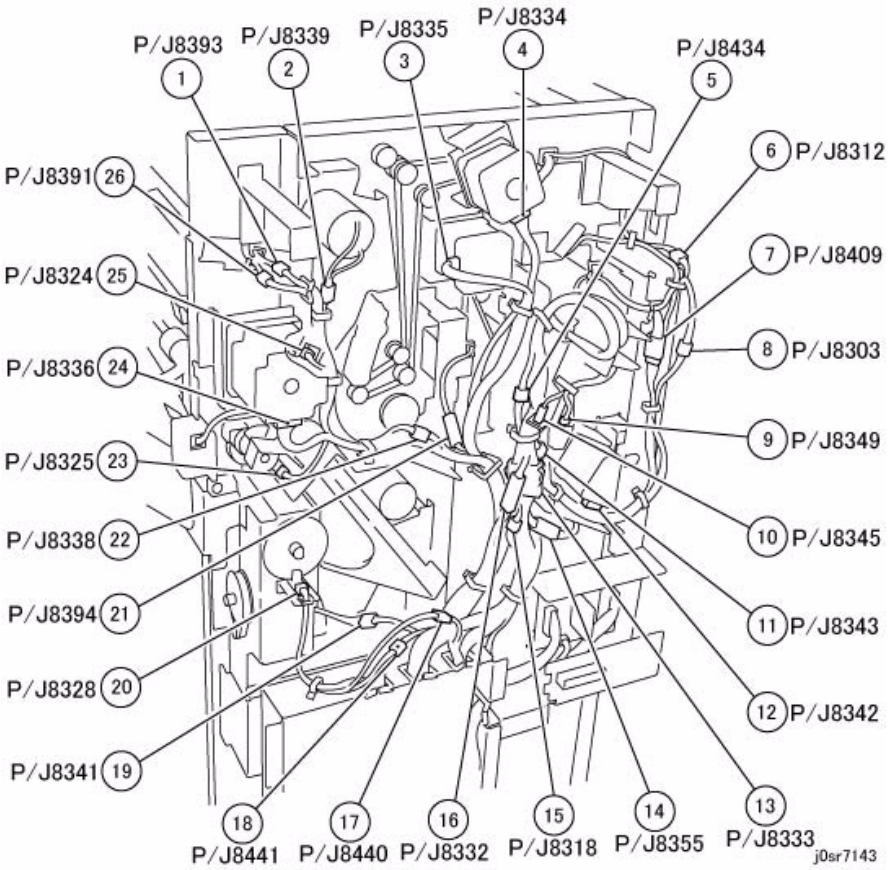

Figure 7 Professional Finisher - Rear

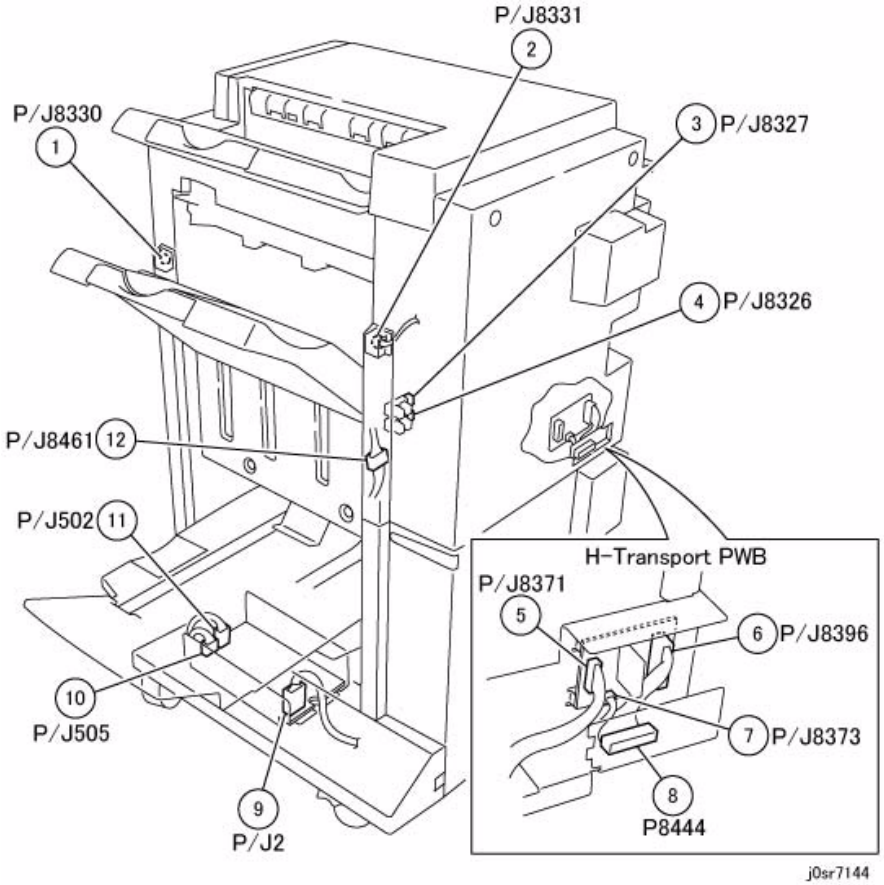

Figure 8 Professional Finisher - Stacker, H-Transport PWB, LVPS

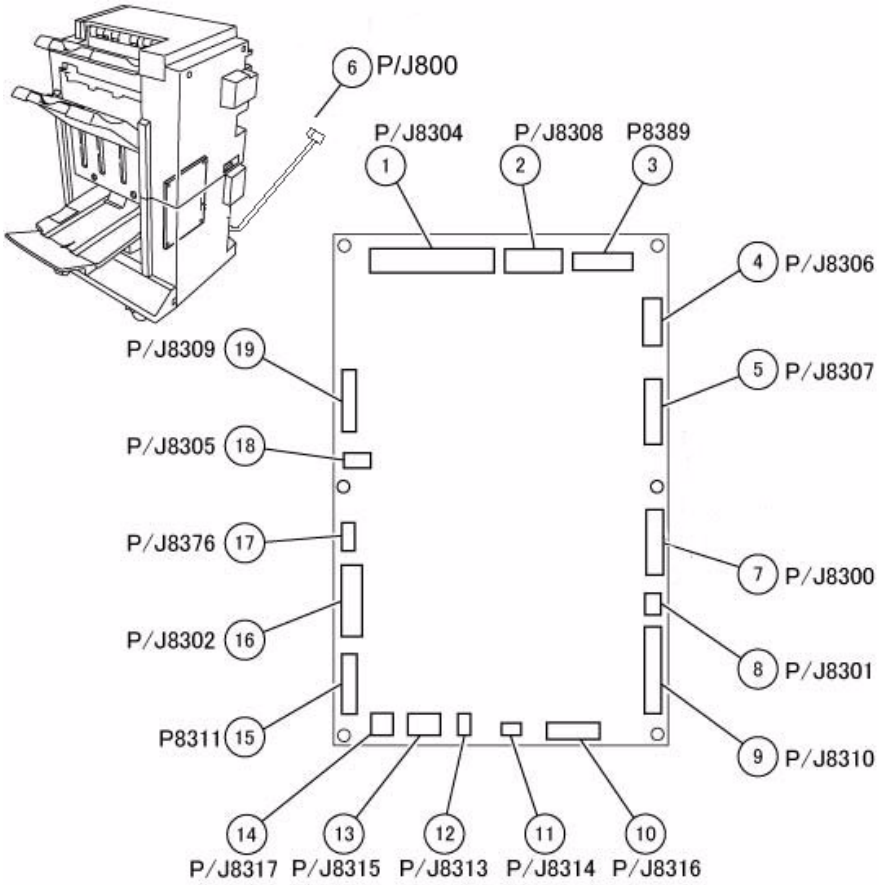

Figure 9 Professional Finisher PWB

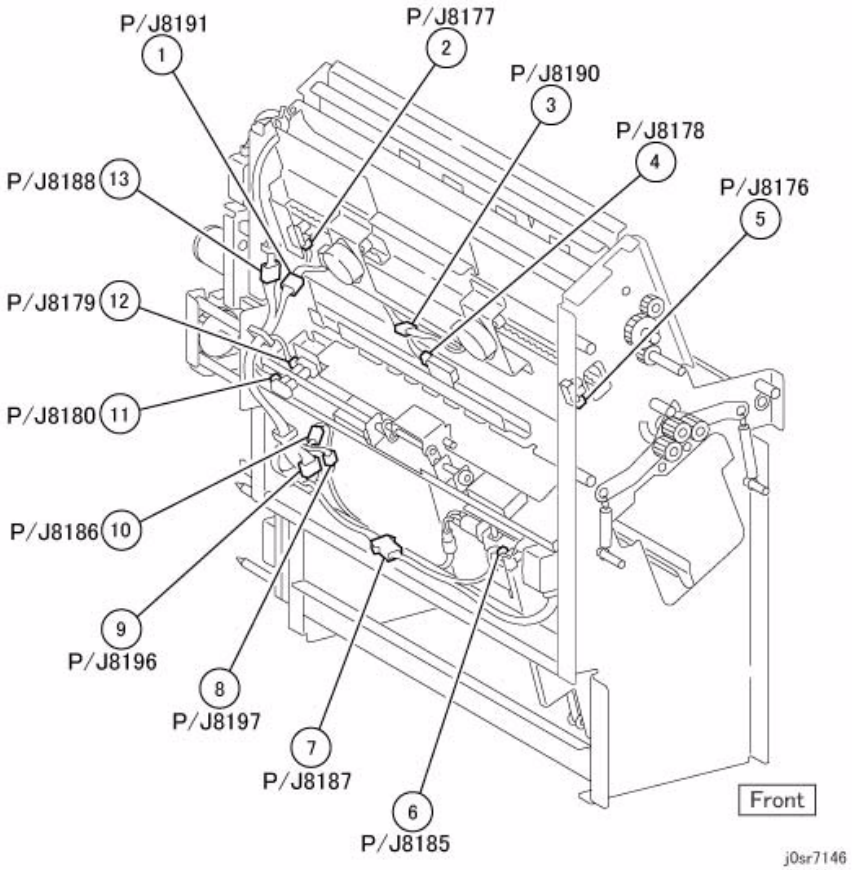

Figure 10 Booklet Rear -Professional Finisher

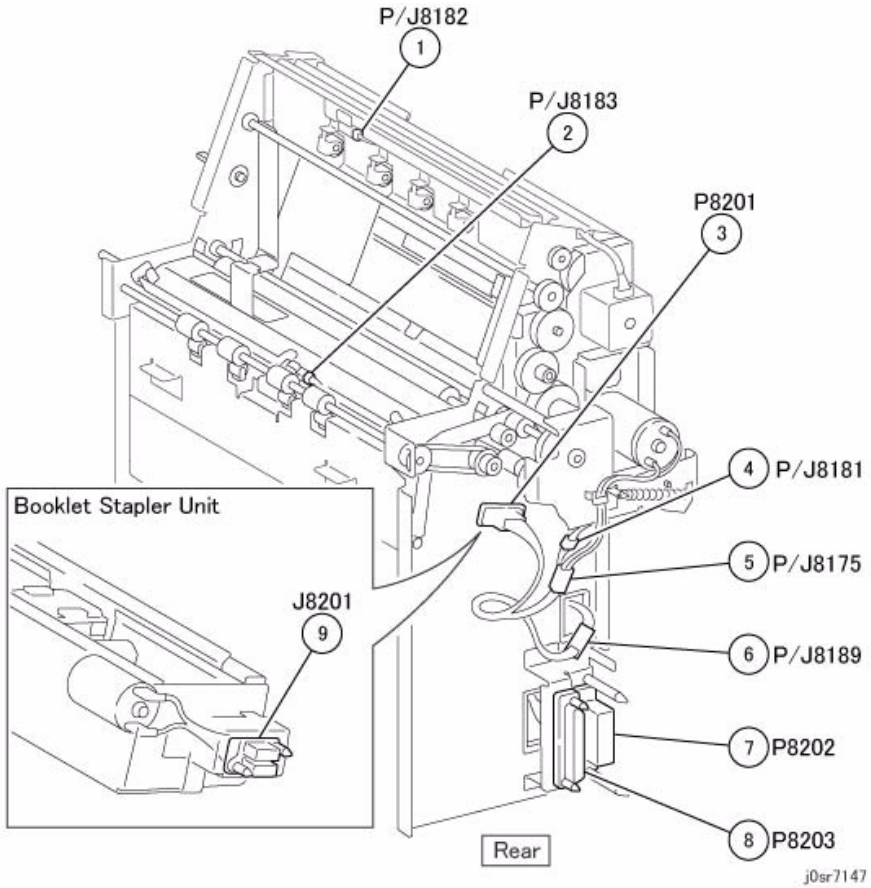

Figure 11 Booklet Front -Professional Finisher

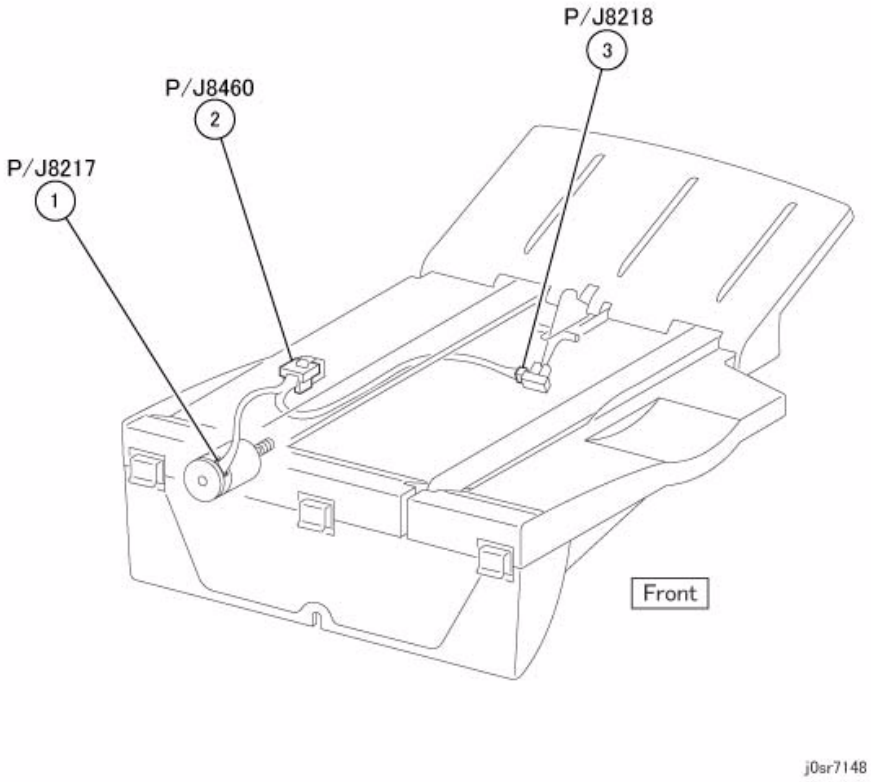

Figure 12 Professional Finisher Booklet Tray Unit

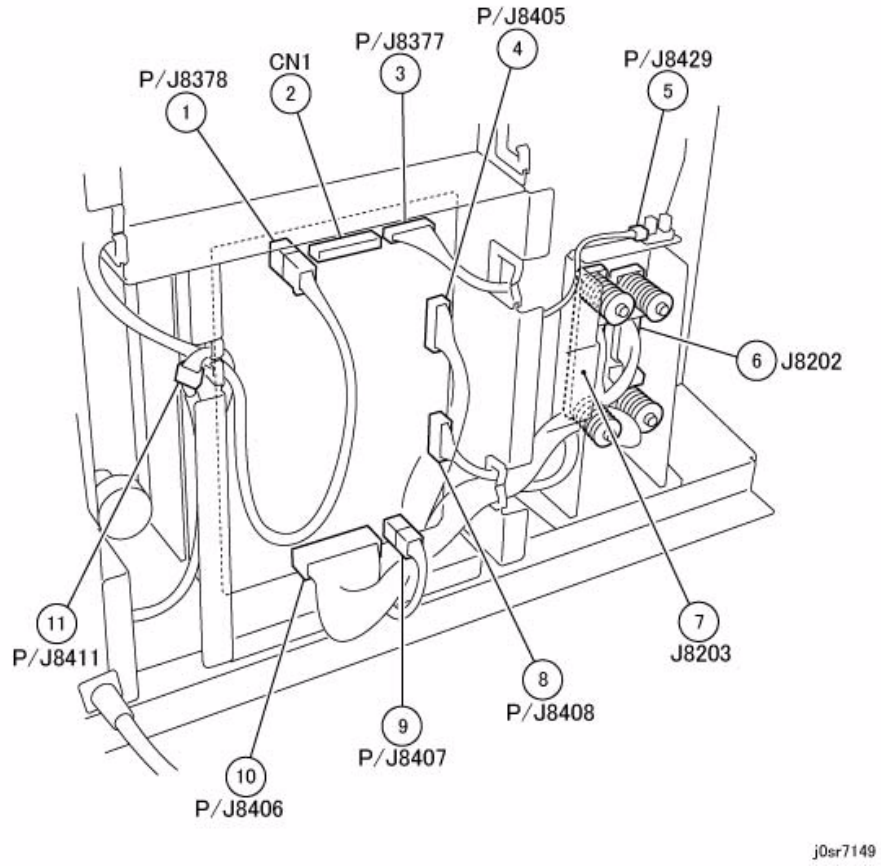

Figure 13 Professional Finisher - Booklet PWB

Integrated Office Finisher Plug/Jack Illustrations

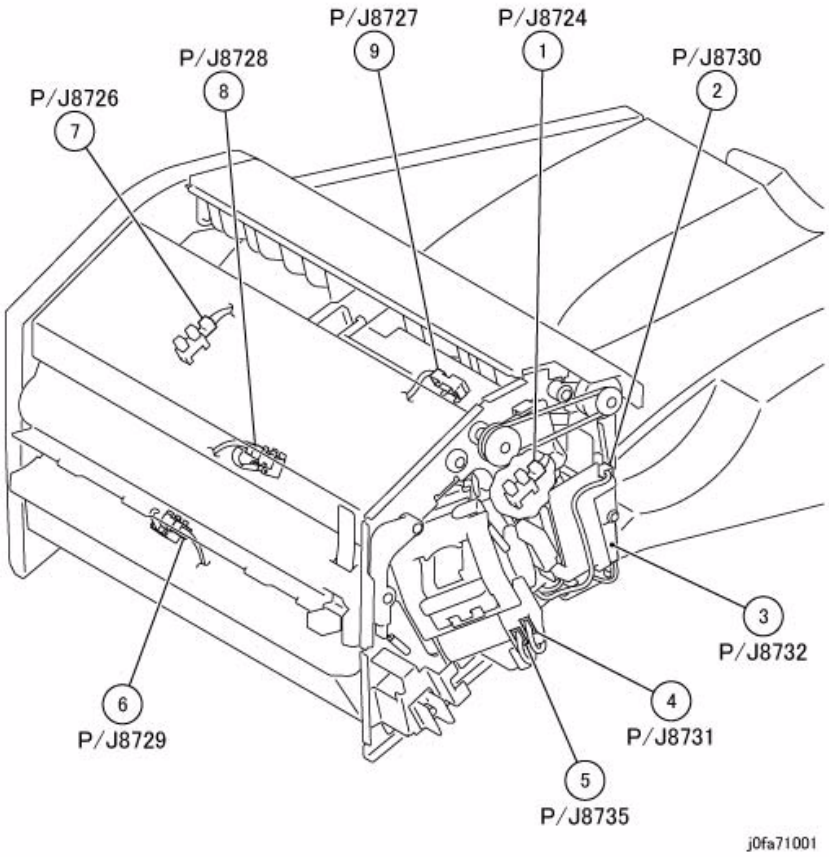

Figure 1 Integrated Office Finisher Front Location

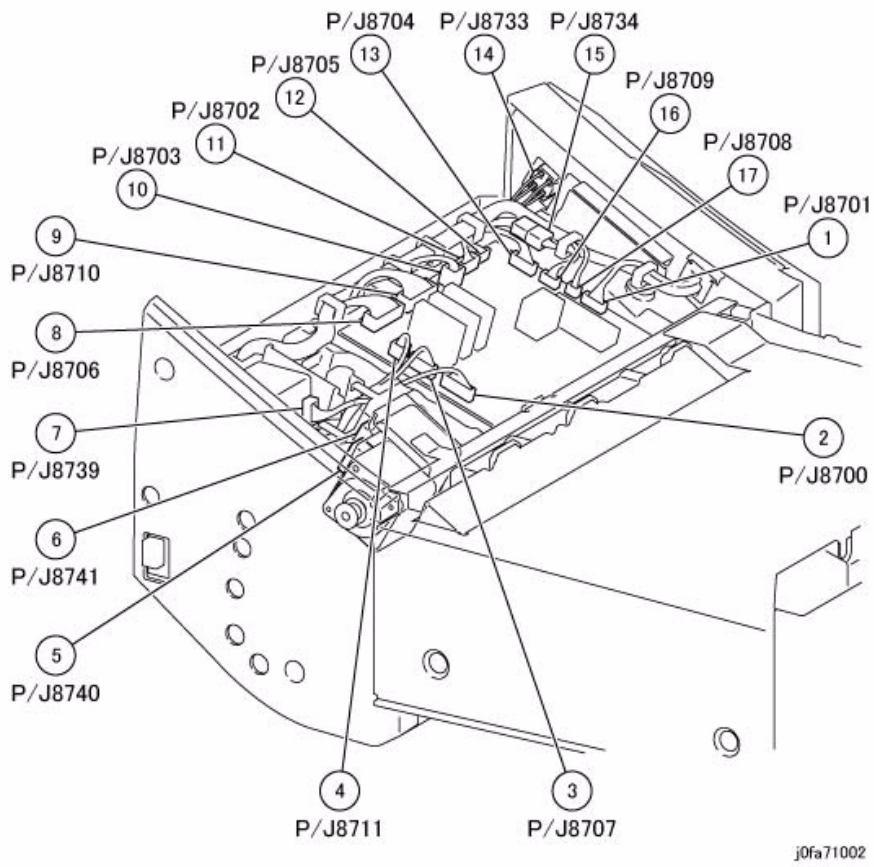

Figure 2 Integrated Office Finisher PWB Location

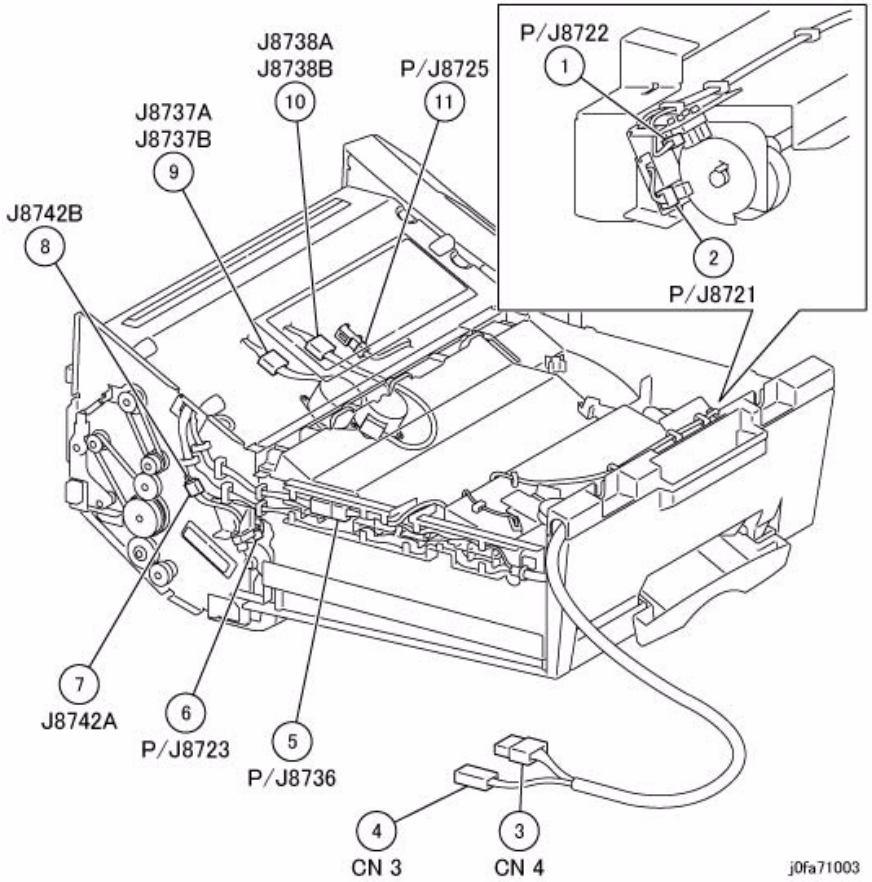

Figure 3 Integrated Office Finisher Bottom Location

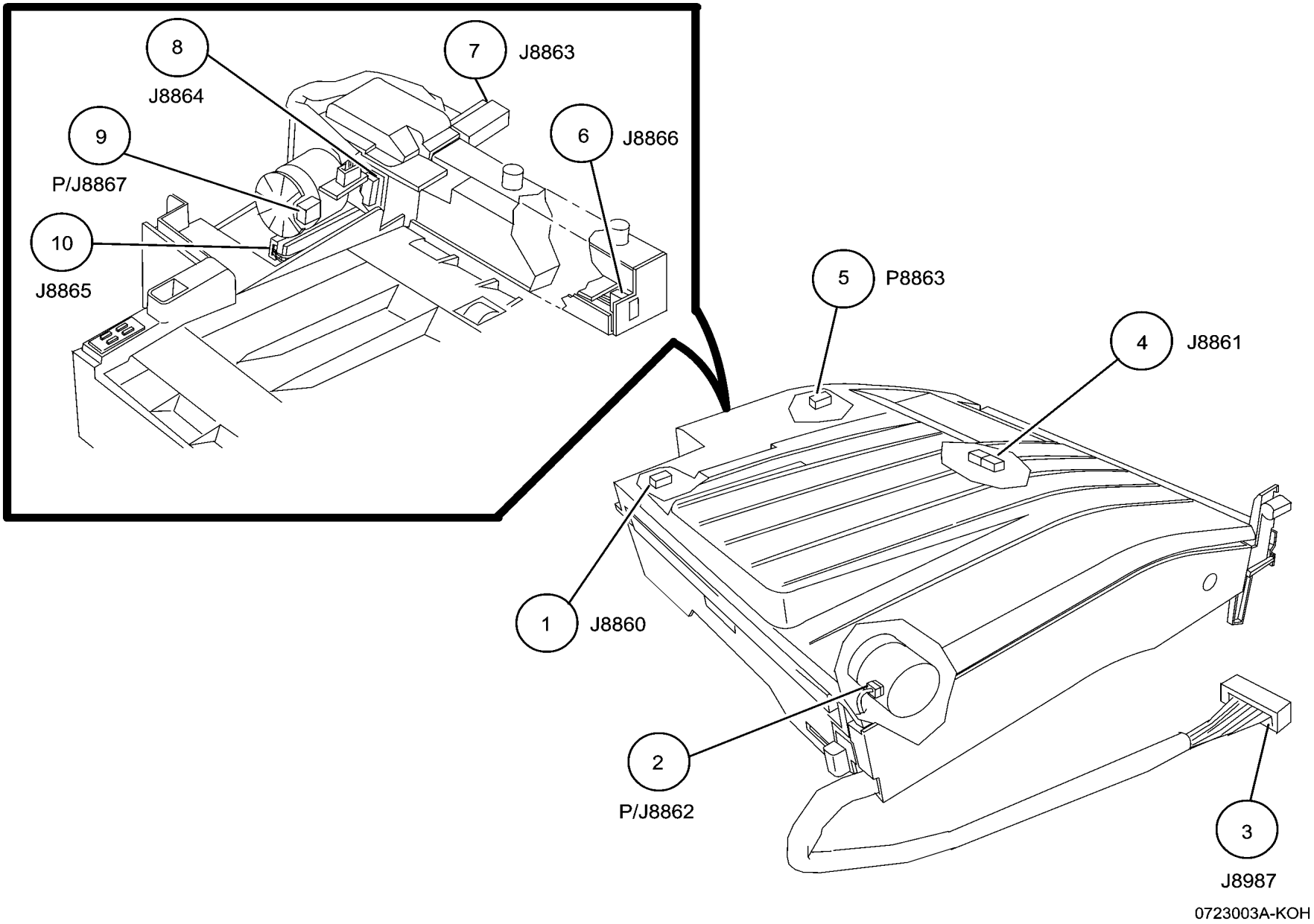

Figure 1 Finisher (LX) Horizontal Transport

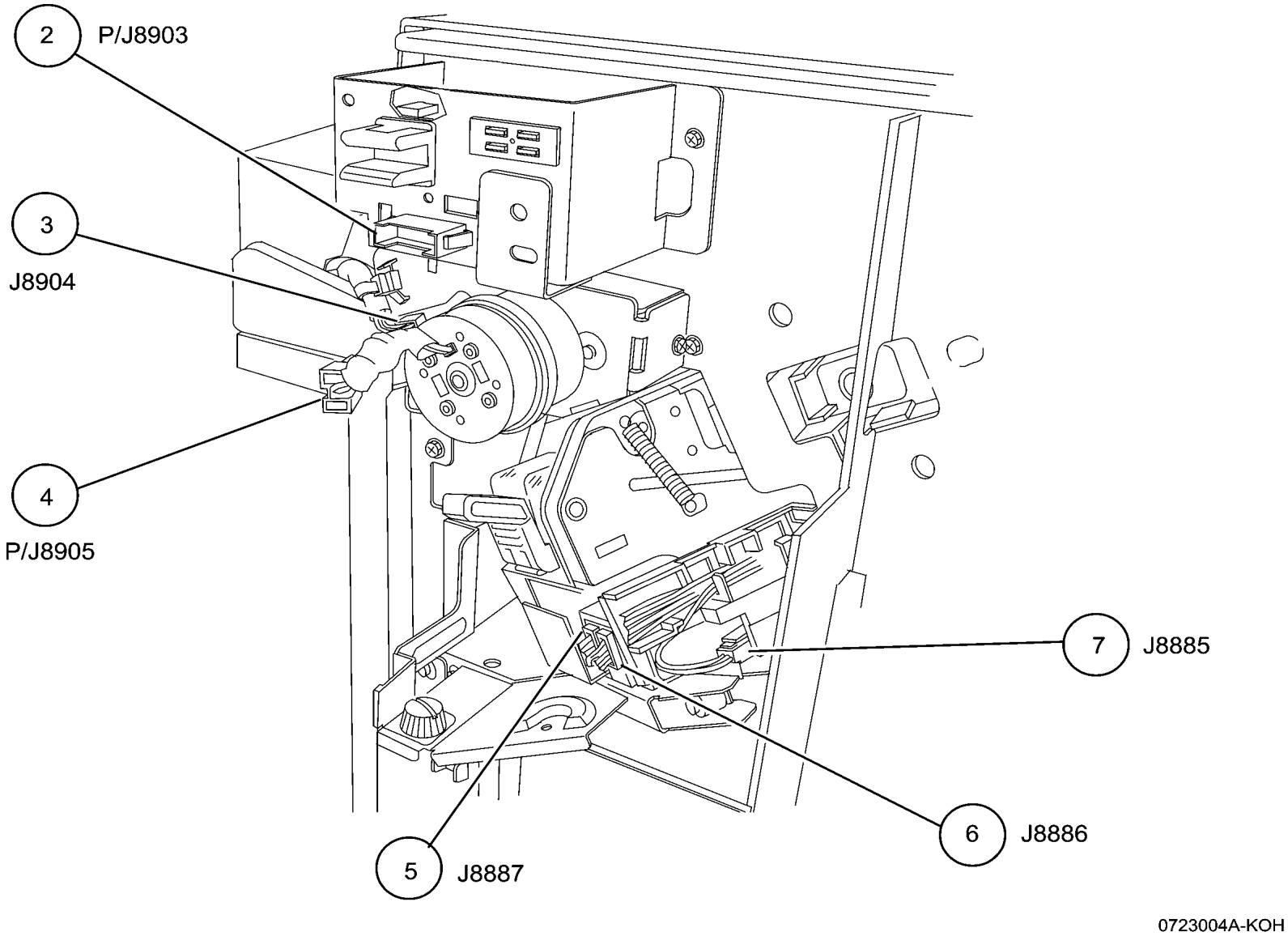

Figure 2 Finisher (LX) Front

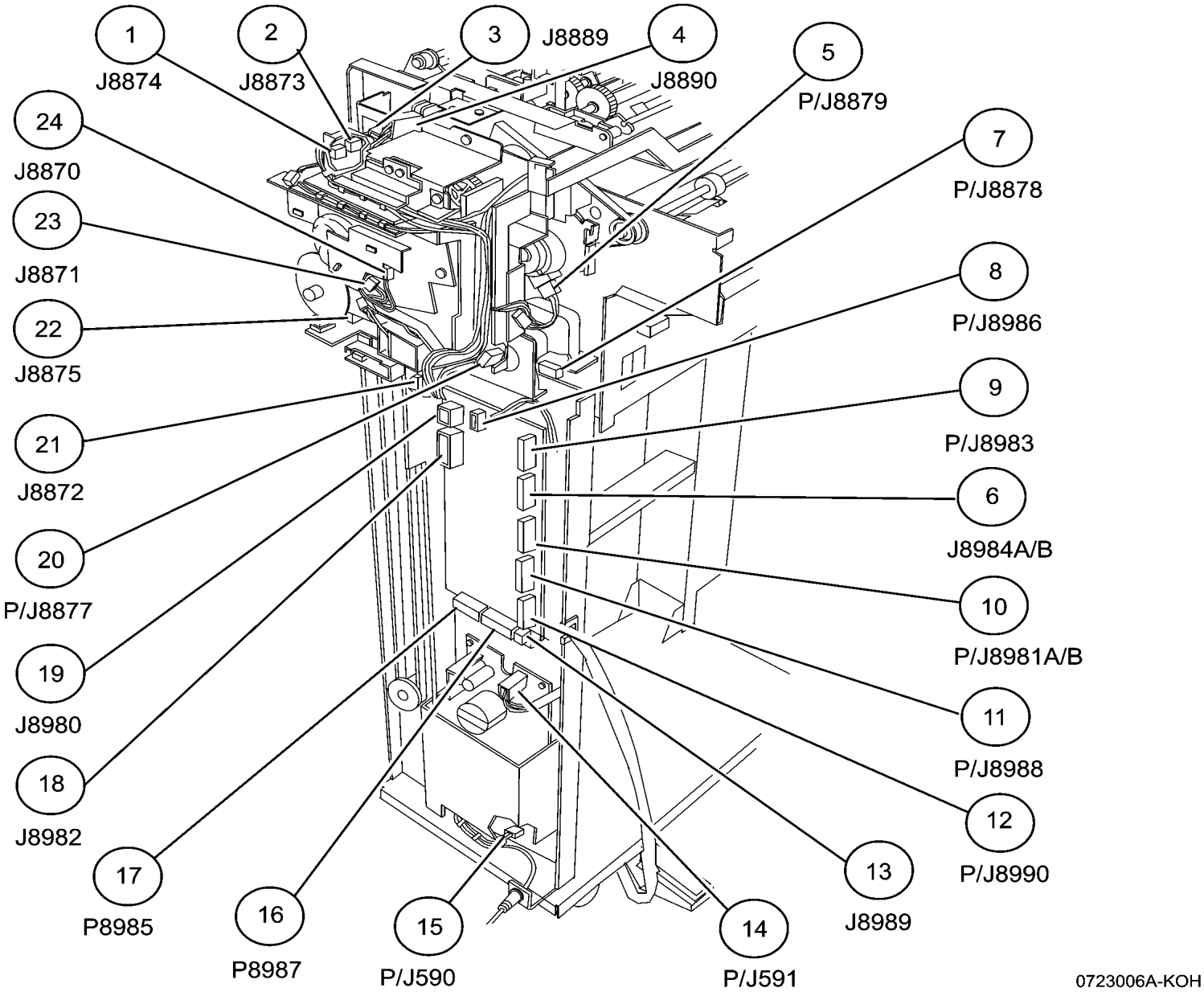

Figure 3 Finisher (LX) Rear

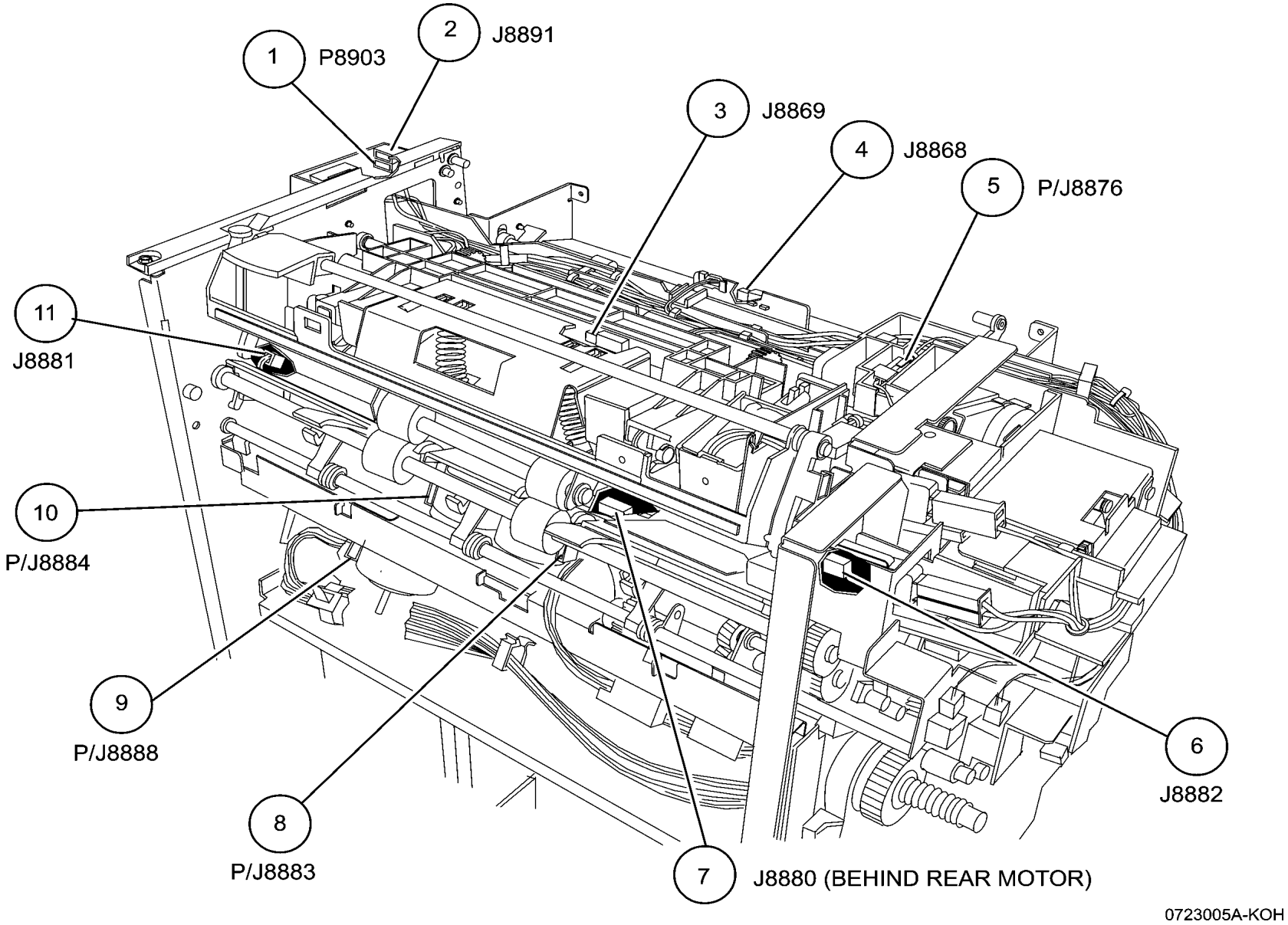

Figure 4 Finisher (LX) Eject

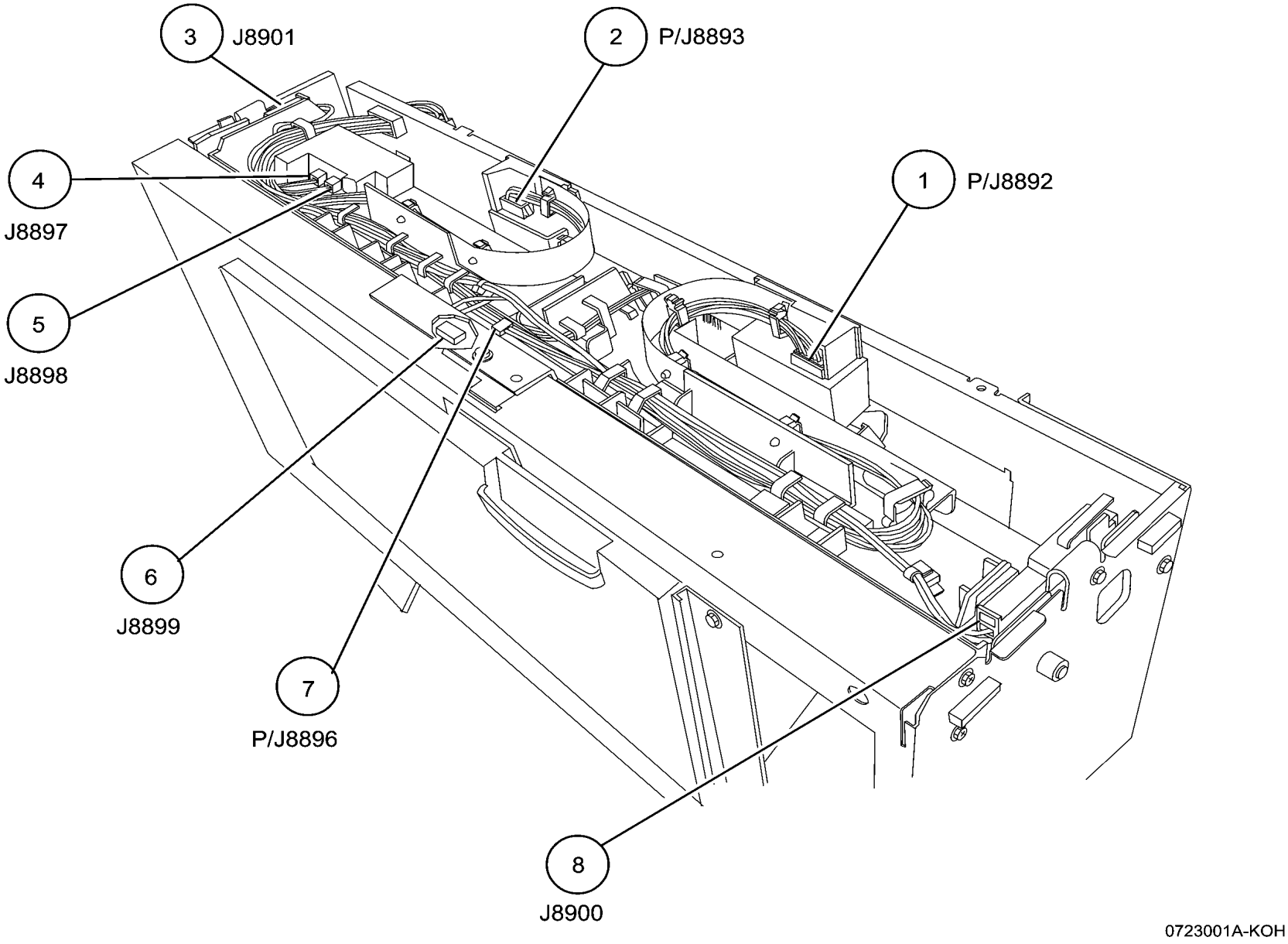

Figure 5 Booklet Maker Stapler Assembly

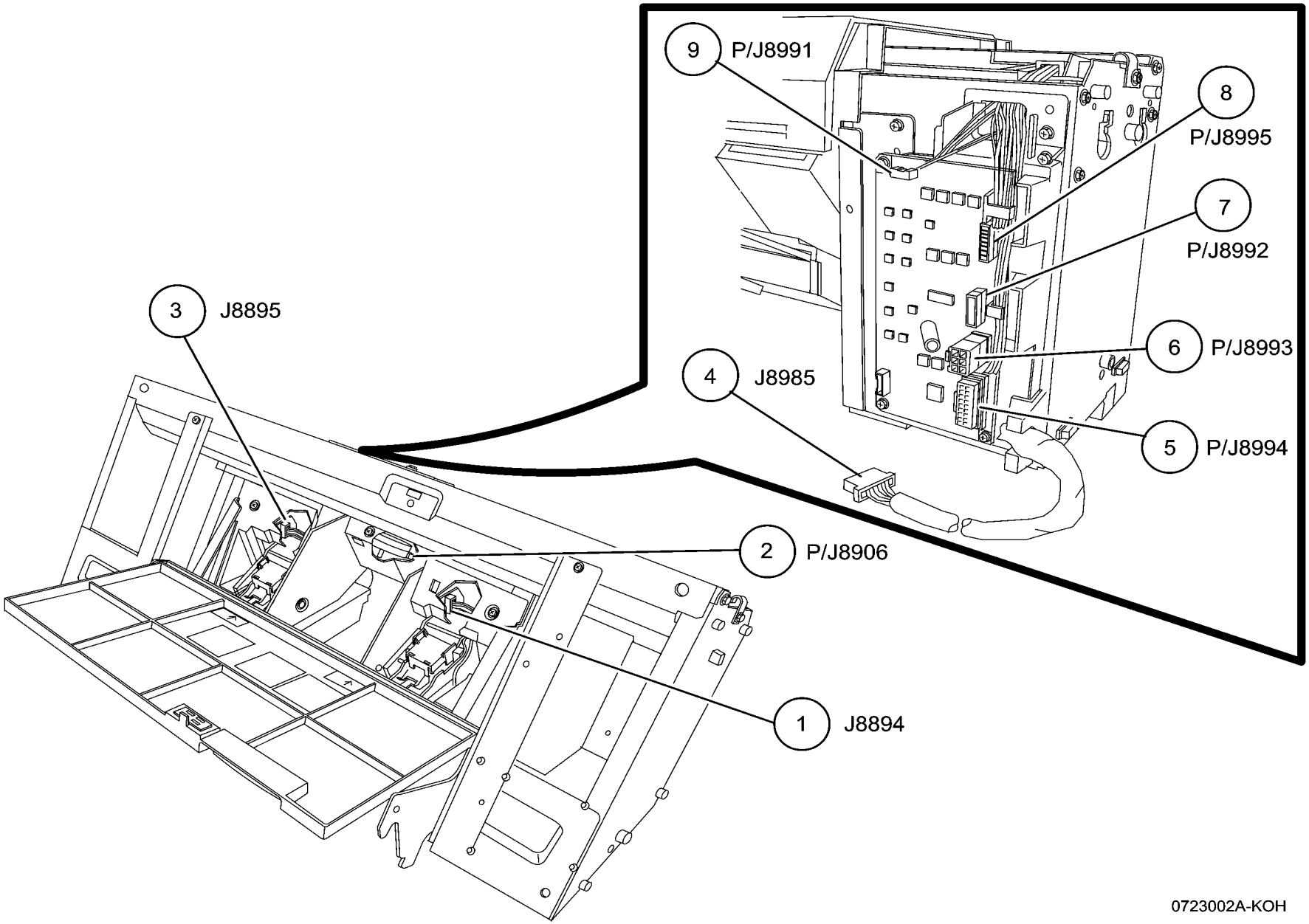

Figure 6 Booklet Maker PWB

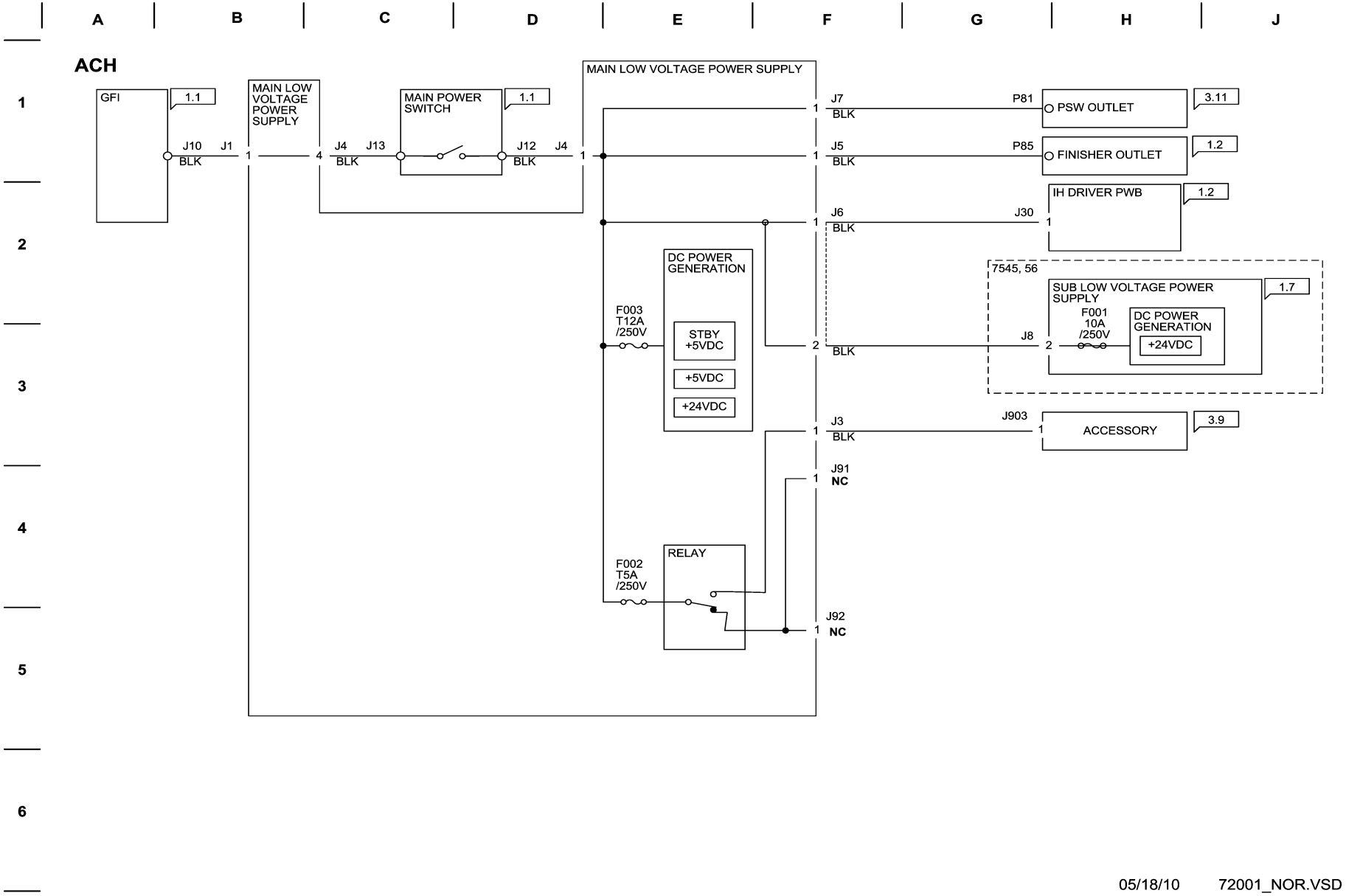
A
B
C
D
E
F
G
H
J
1
2
3
4
5
6
ACH
GFI
1.1
J10
BLK
J1
MAIN LOW VOLTAGE POWER SUPPLY
J4
BLK
J13
MAIN POWER SWITCH
1.1
J12
BLK
J4
MAIN LOW VOLTAGE POWER SUPPLY
J7
BLK
P81
PSW OUTLET
3.11
J5
BLK
P85
FINISHER OUTLET
1.2
IH DRIVER PWB
1.2
J6
BLK
J30
DC POWER GENERATION
F003
T12A
/250V
STBY
+5VDC
+5VDC
+24VDC
7545, 56
SUB LOW VOLTAGE POWER SUPPLY
1.7
F001
10A
/250V
DC POWER GENERATION
+24VDC
J8
BLK
J3
BLK
J903
ACCESSORY
3.9
J91
NC
RELAY
F002
T5A
/250V
J92
NC
05/18/10
72001_NOR.VSD

Figure 1 ACH

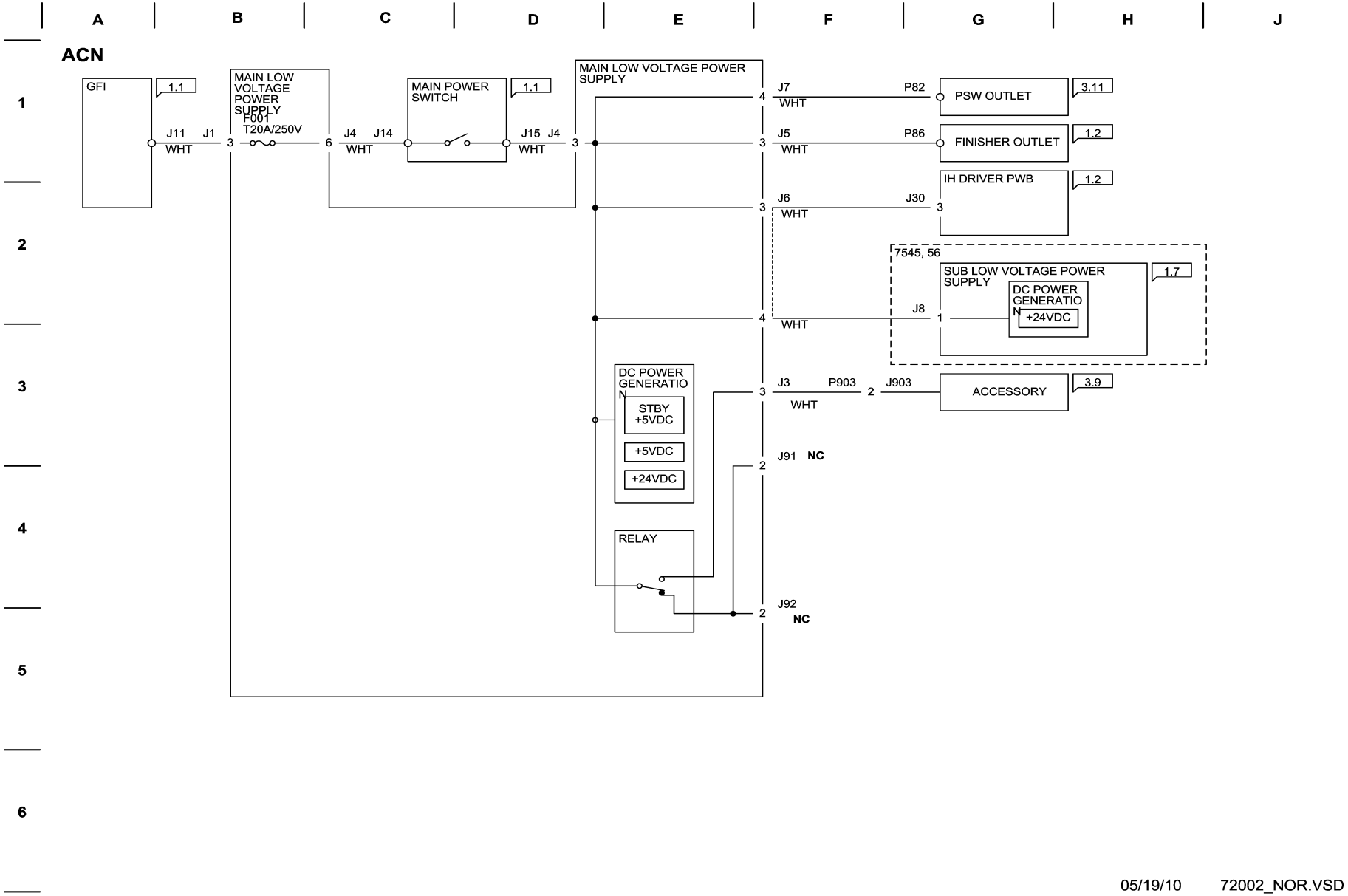

Figure 2 ACN Wirenet

1.8 VDC Wirenets

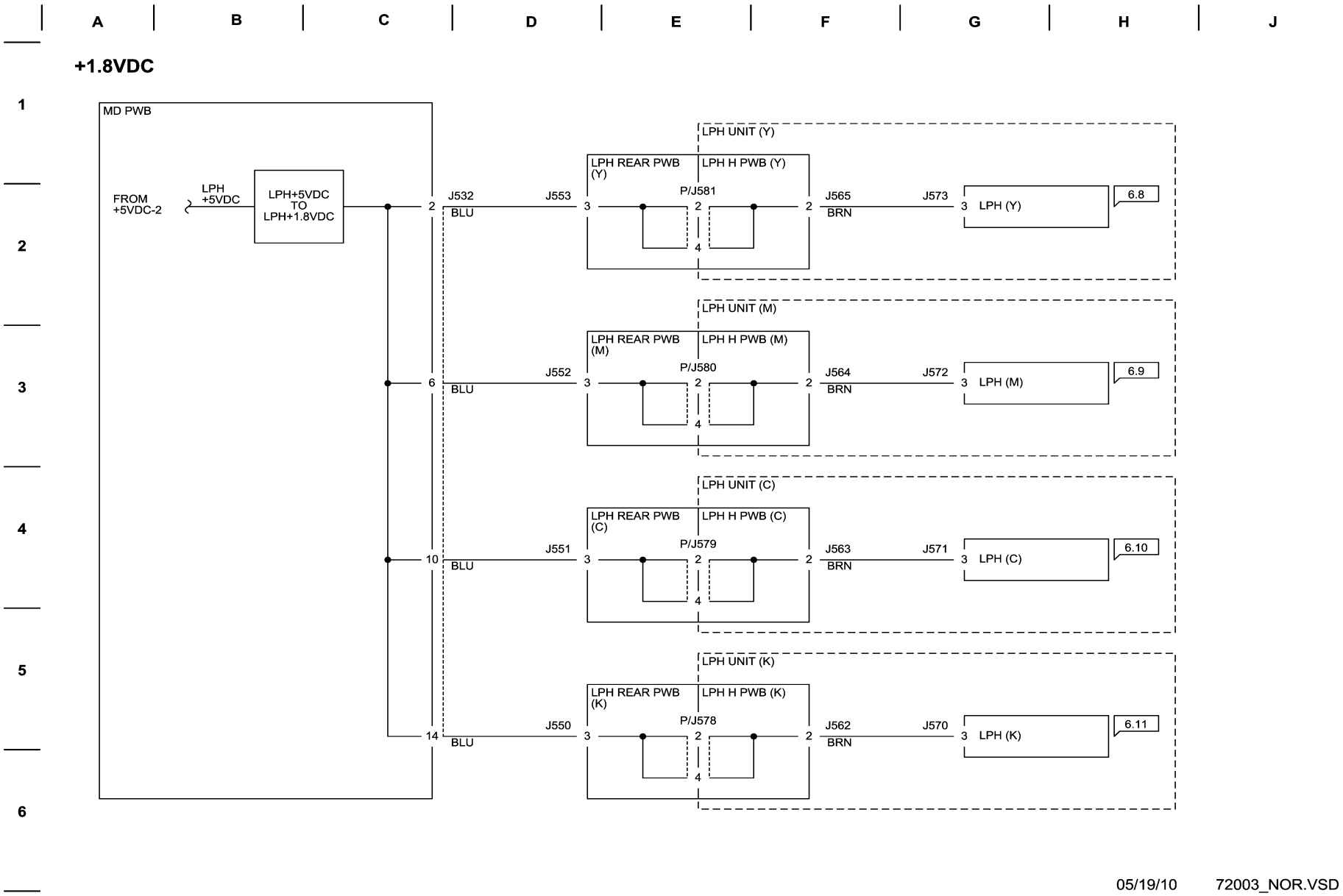

Figure 1 +1.8VDC Wirenet

1.8 VRTN Wirenet

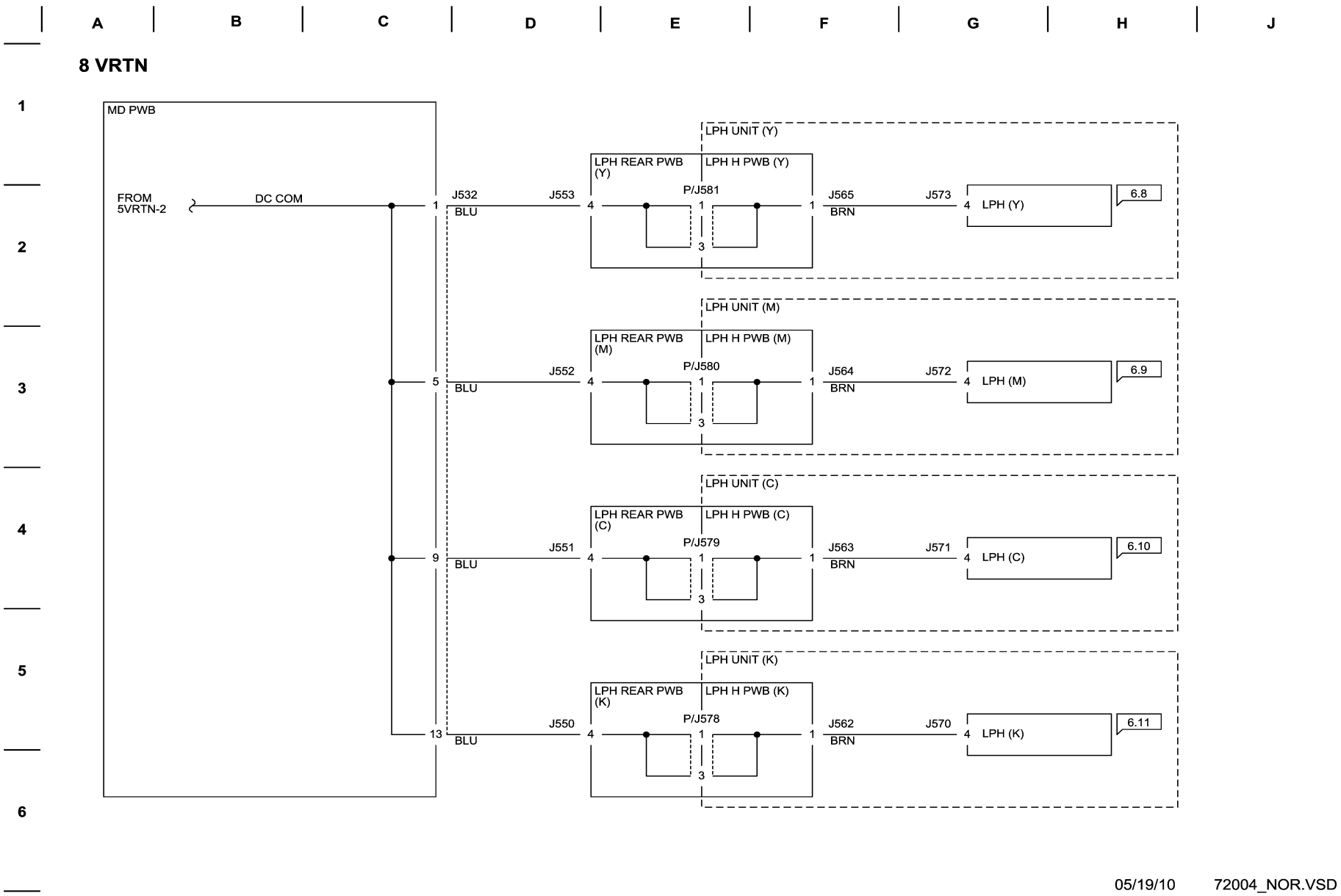

Figure 1 1.8VDC RTN Wirenet

+2.5 VDC Wirenet

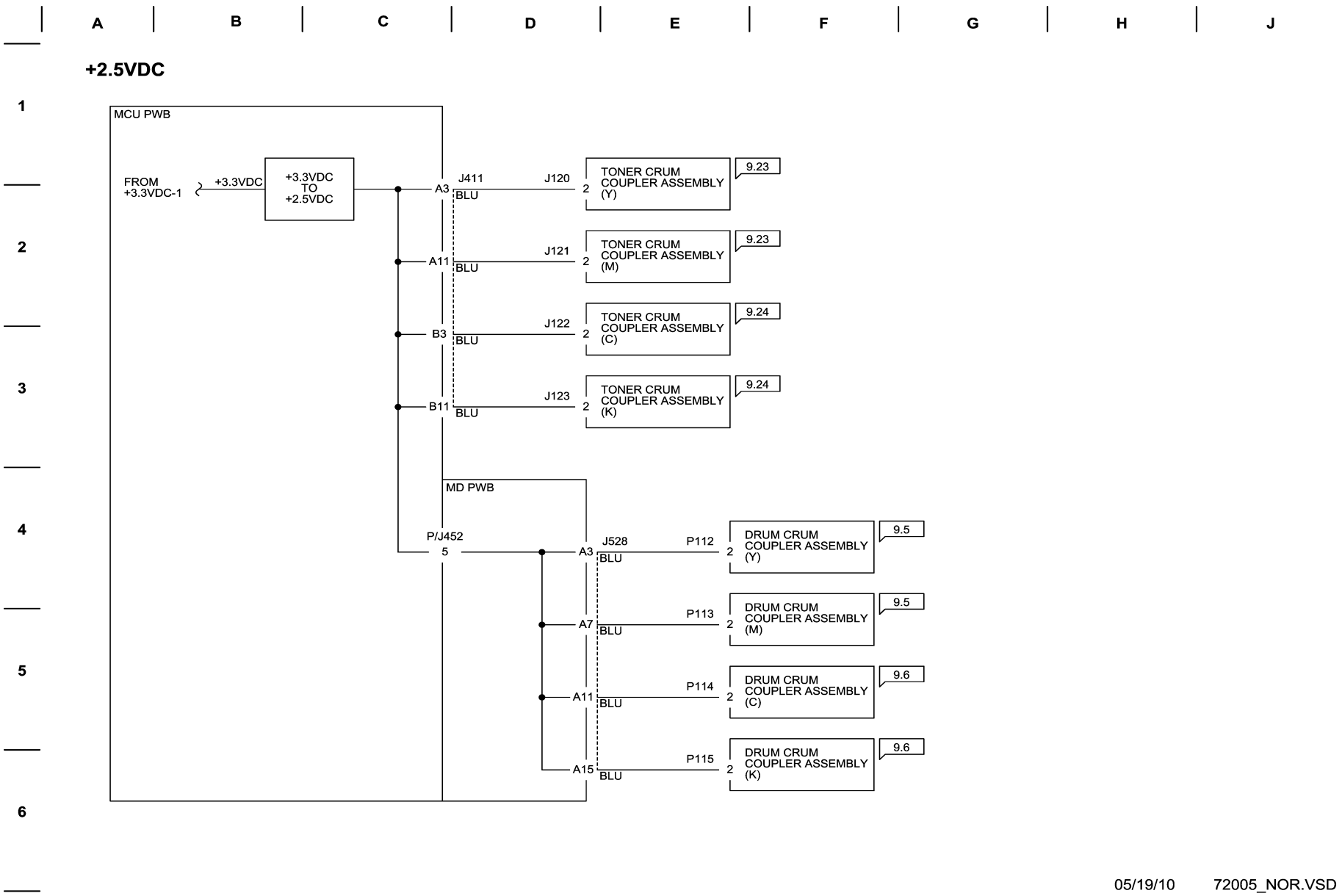

Figure 1 +2.5VDC Wirenet

2.5VDC RTN

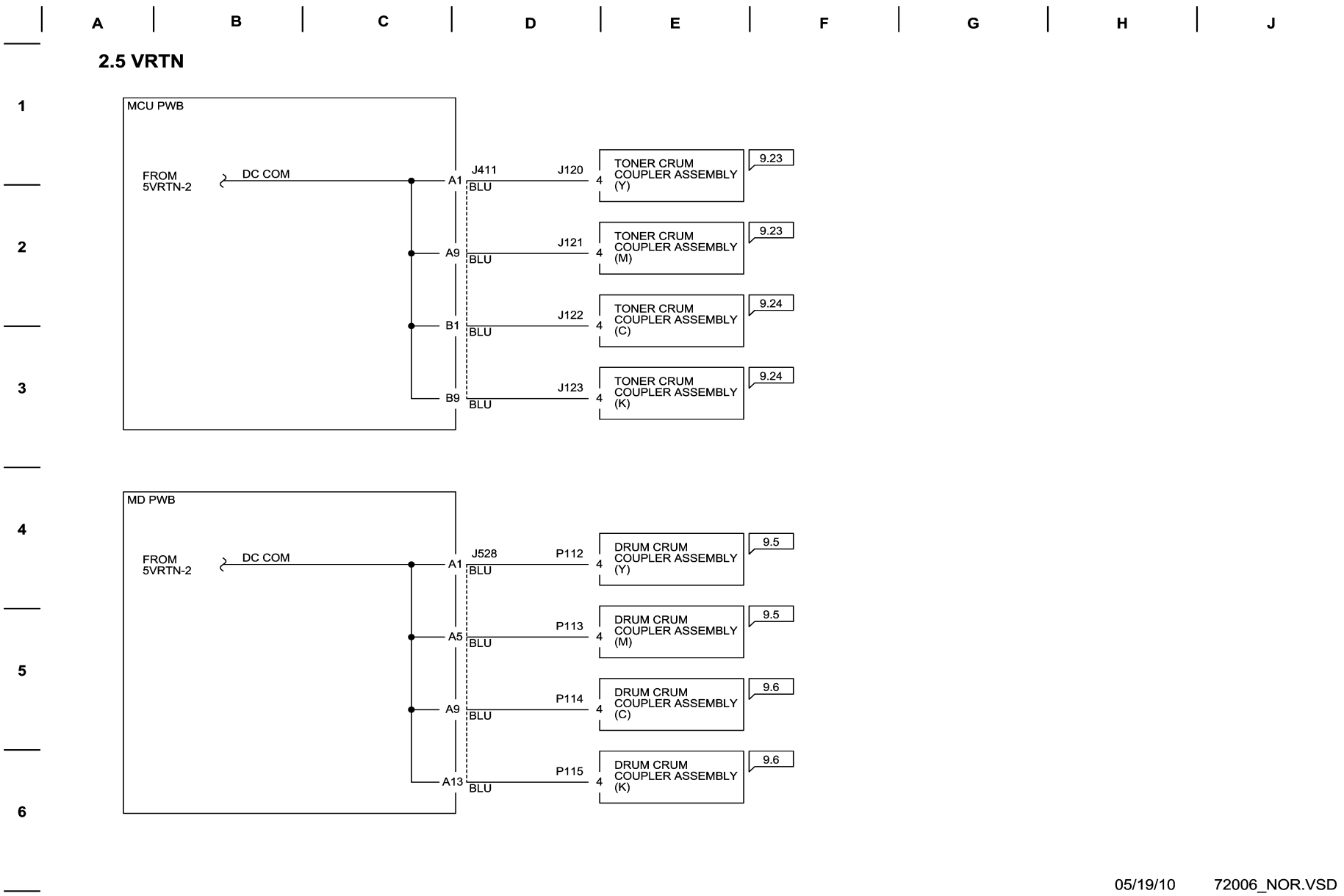

Figure 1 2.5VDC RTN Wirenet

+3.3 VDC-1 Wirenet

7.2.7 +3.3VDC-1

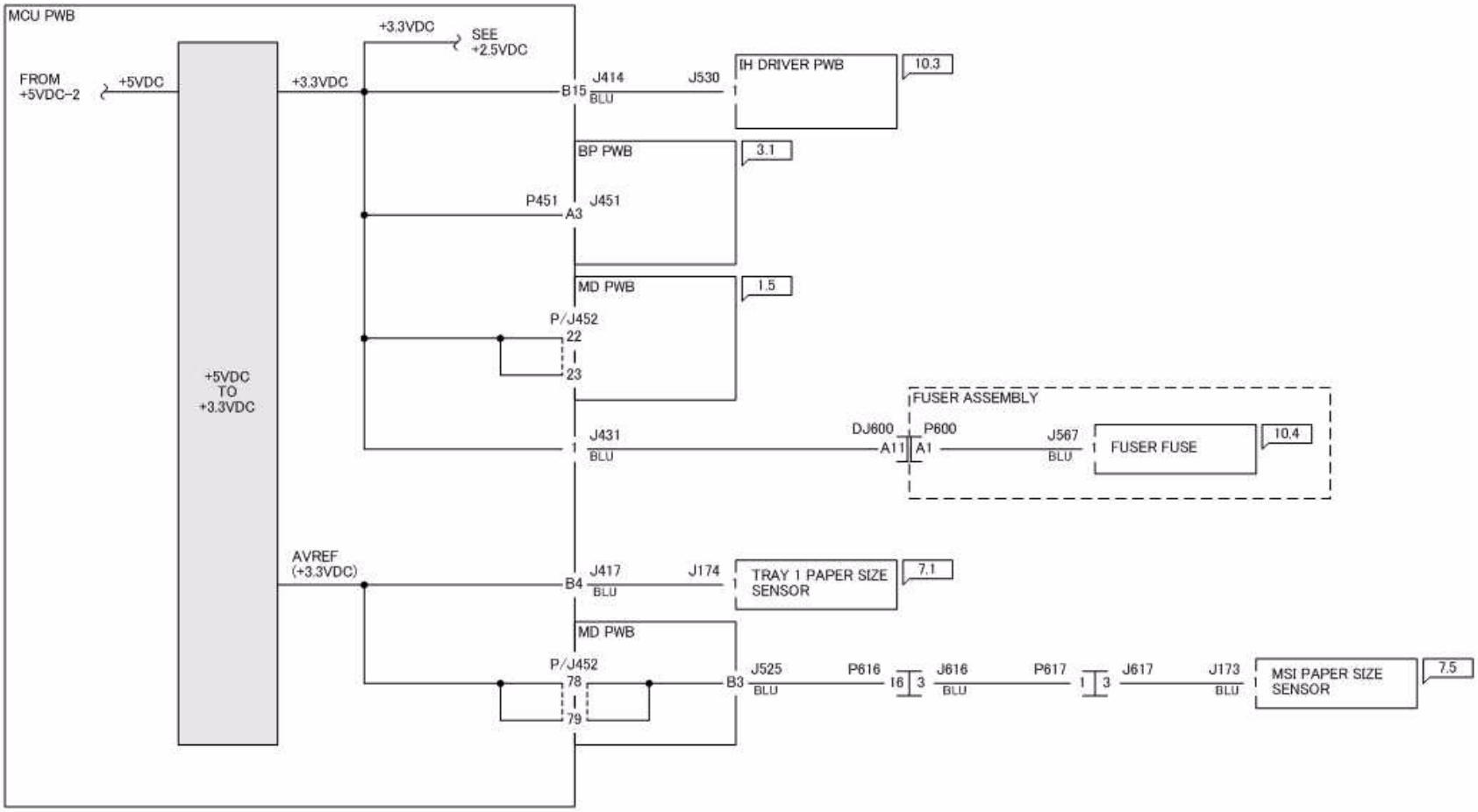

j0ki72007

Figure 1 +3.3VDC-1 Wirenet

+ 3.3 VDC-2 Wirenet

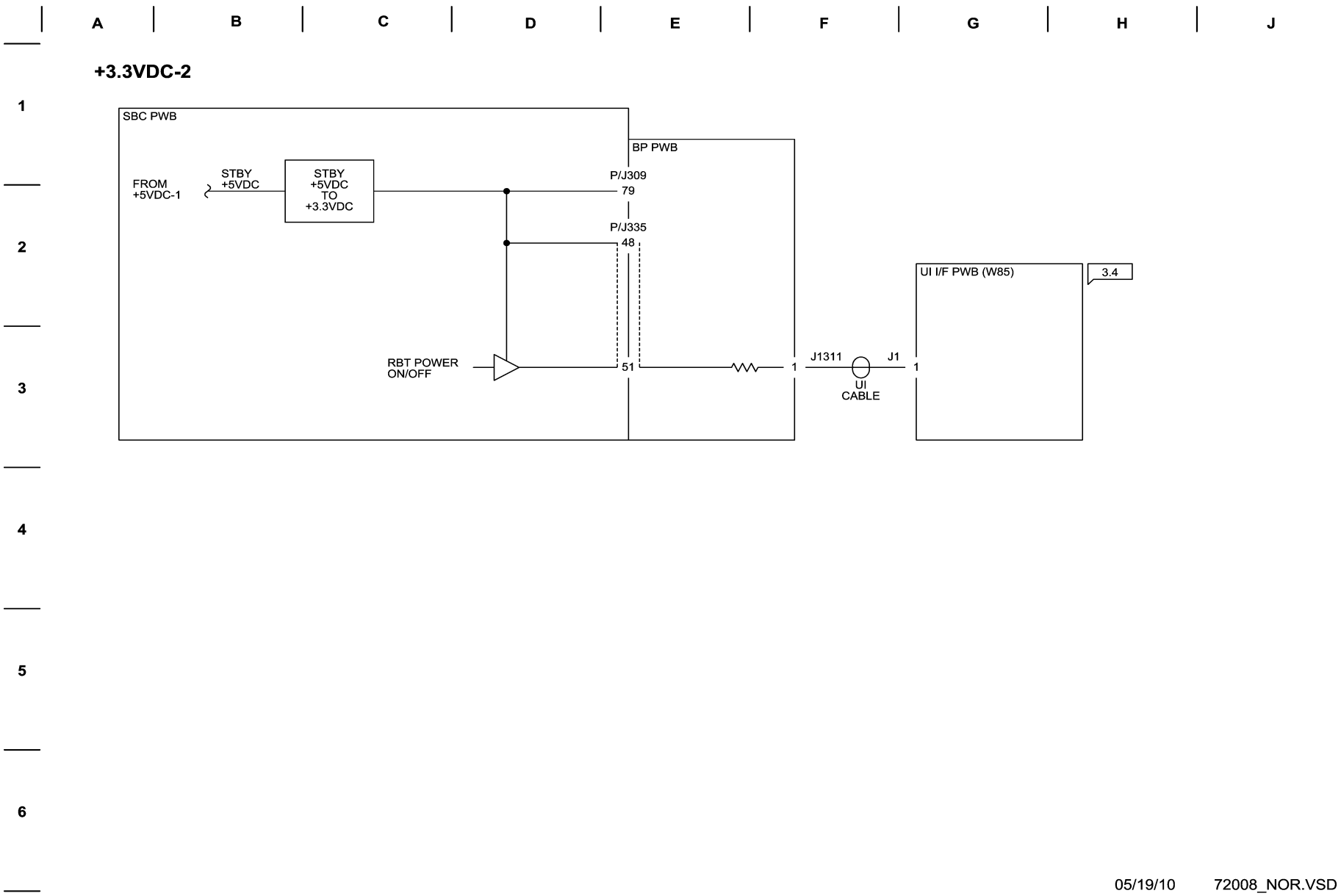

Figure 1 +3.3VDC-2 Wirenet

3.3 VDC RTN-1 Wirenet

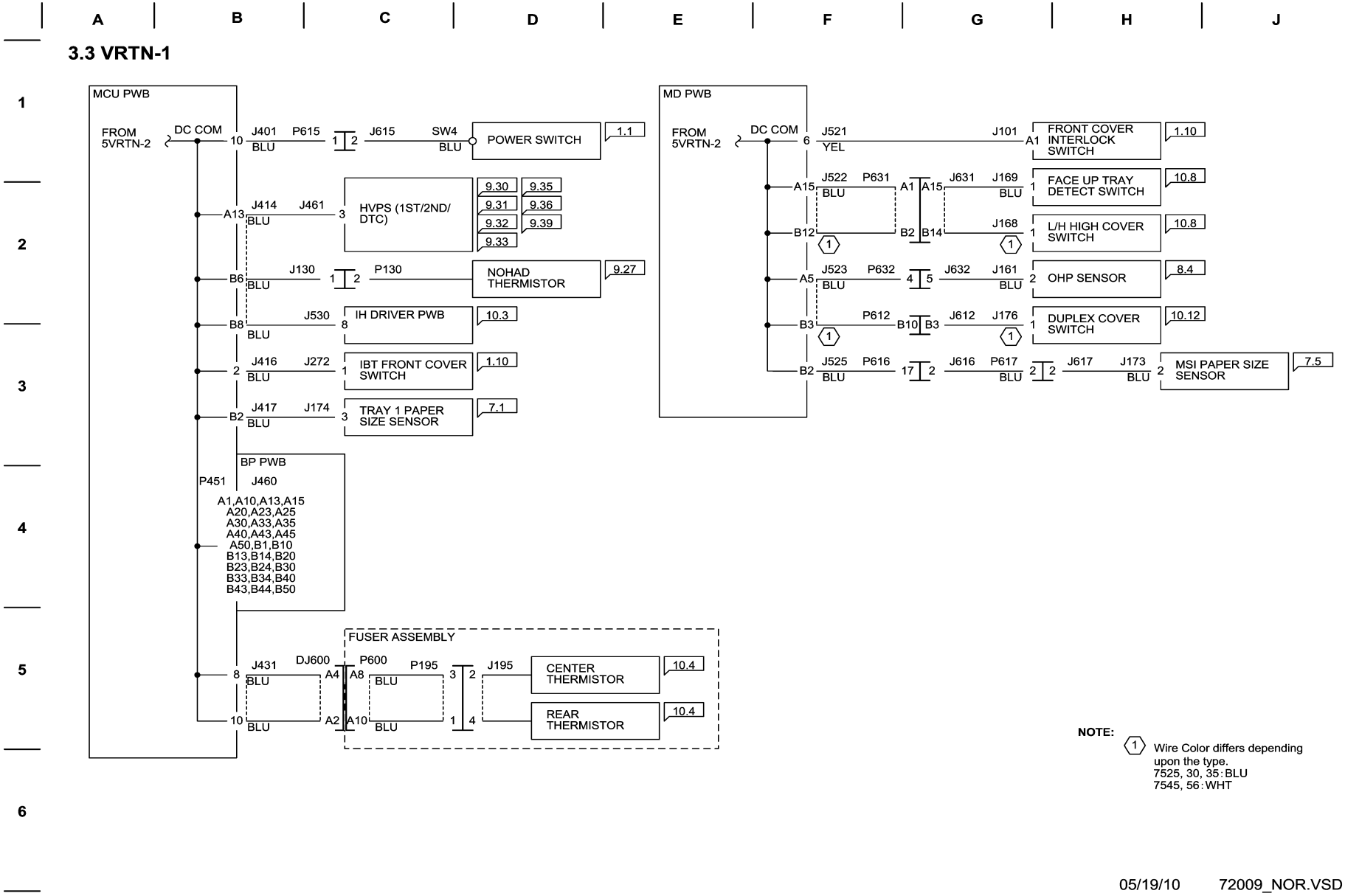

Figure 1 3.3VDC RTN-1 Wirenet

3.3 VDC RTN-2 Wirenet

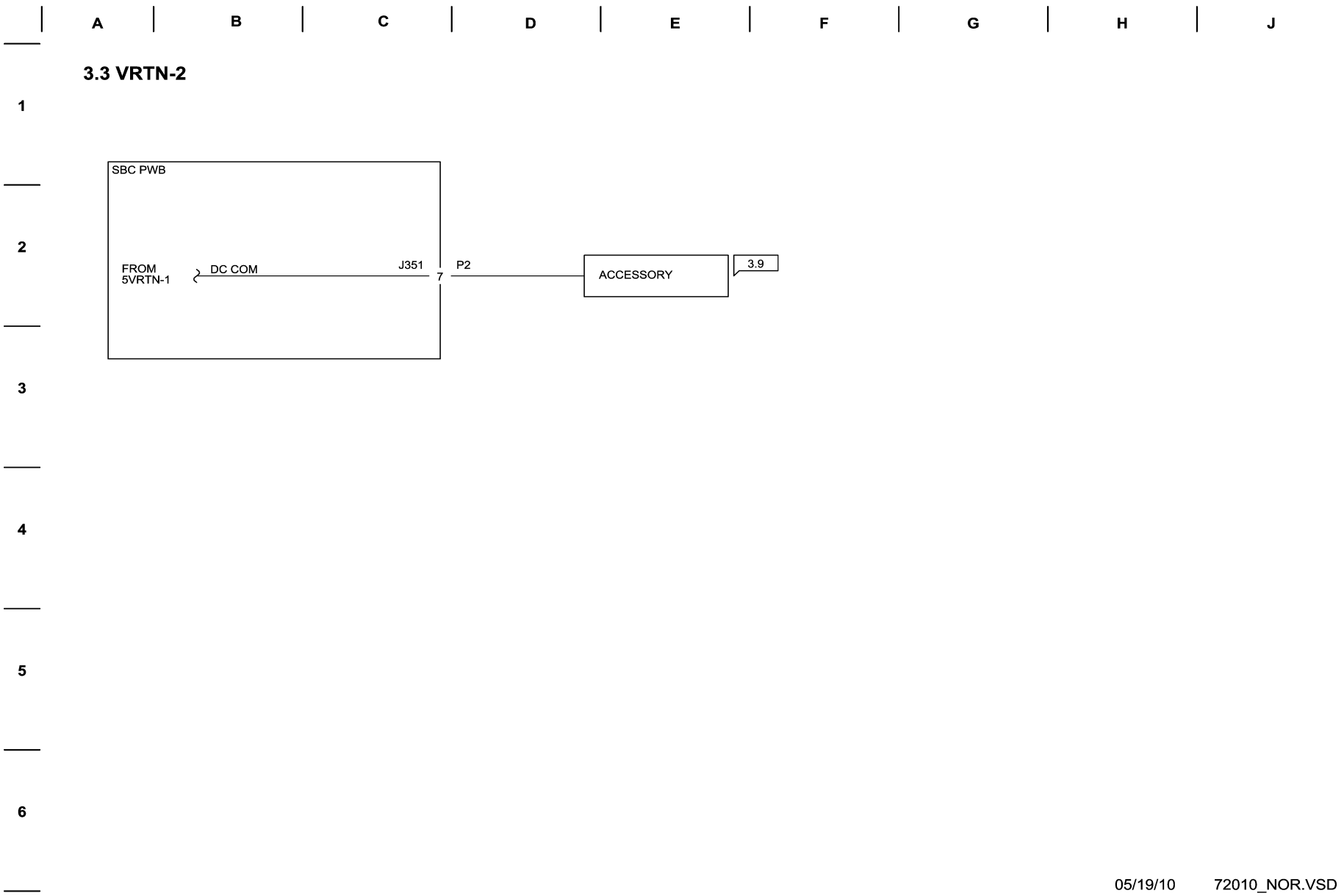

Figure 1 3.3 VDC RTN-2 Wirenet

+5VDC-1 Wirenet

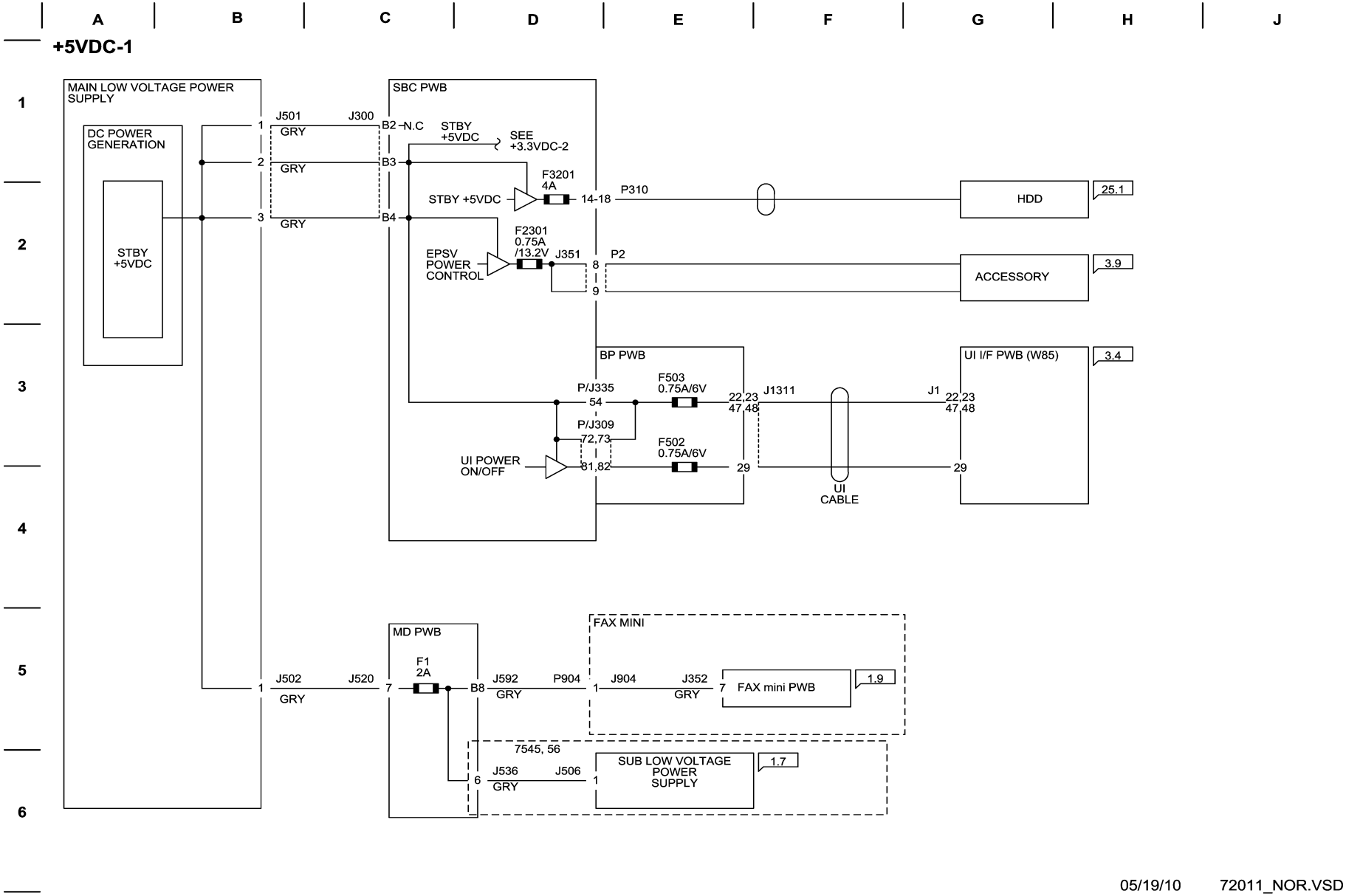

Figure 1 +5VDC-1 Wirenet

+5VDC-2 Wirenet

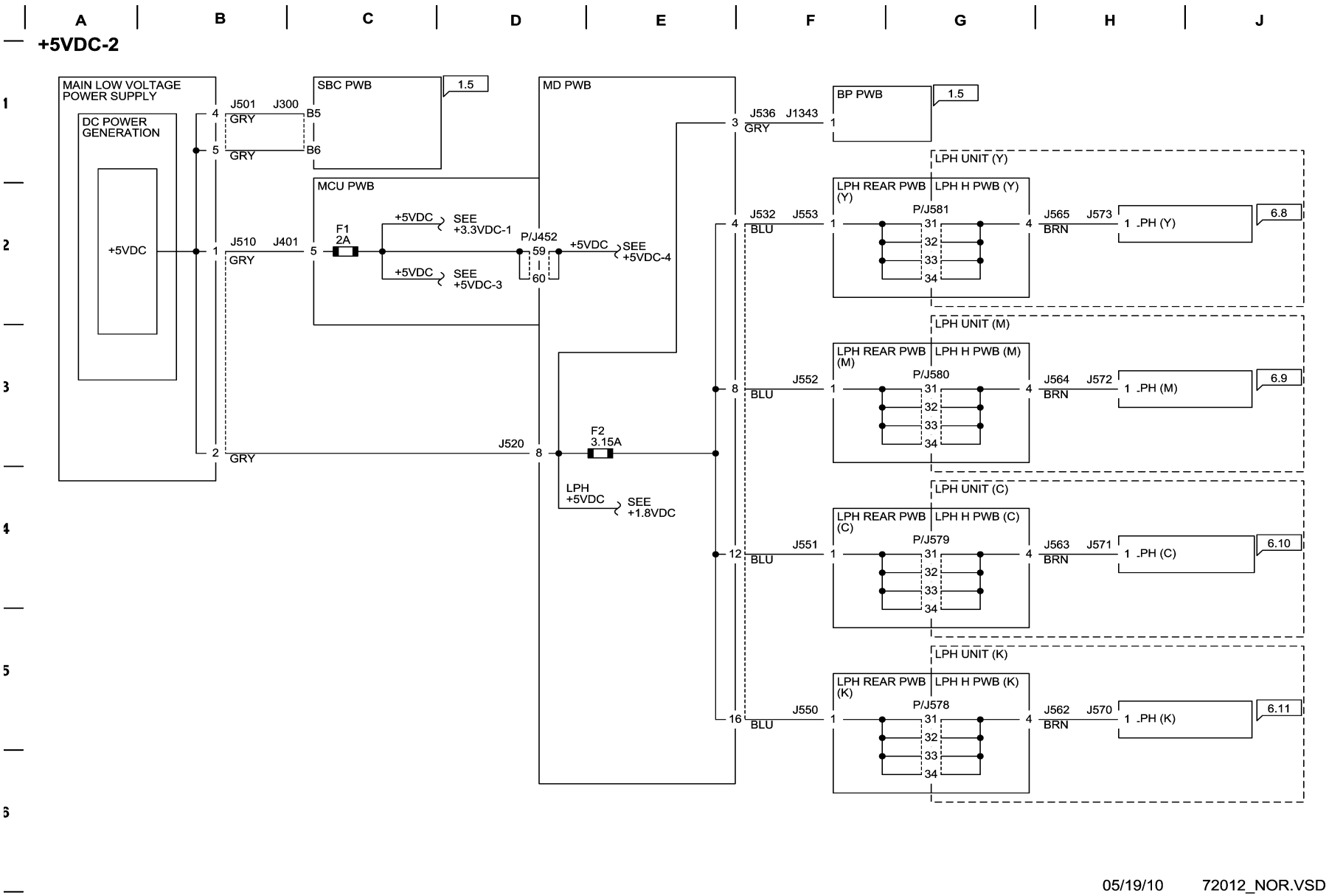

Figure 1 +5VDC-2 Wirenet

+5VDC-3 Wirenet

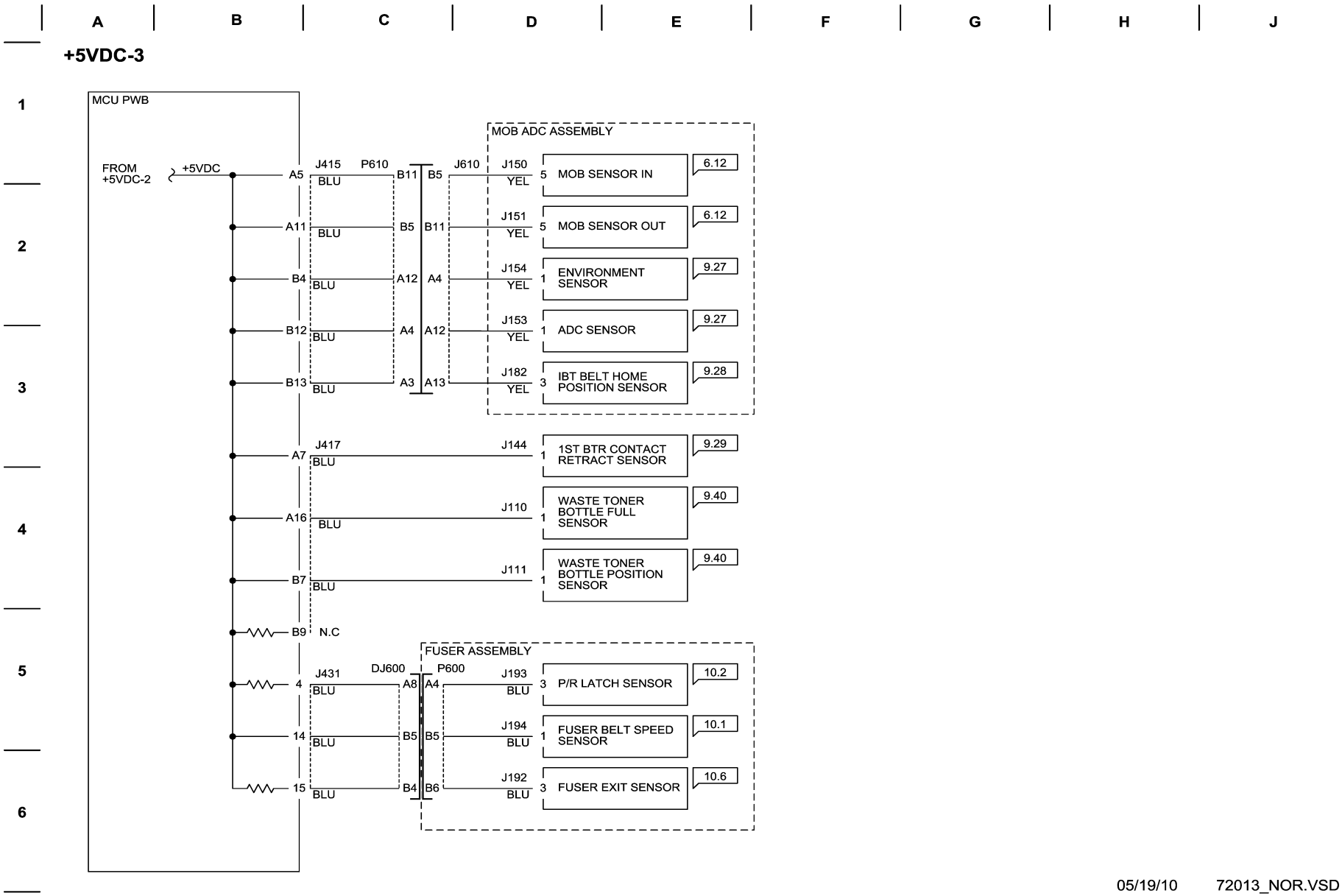

Figure 1 +5VDC-3 Wirenet

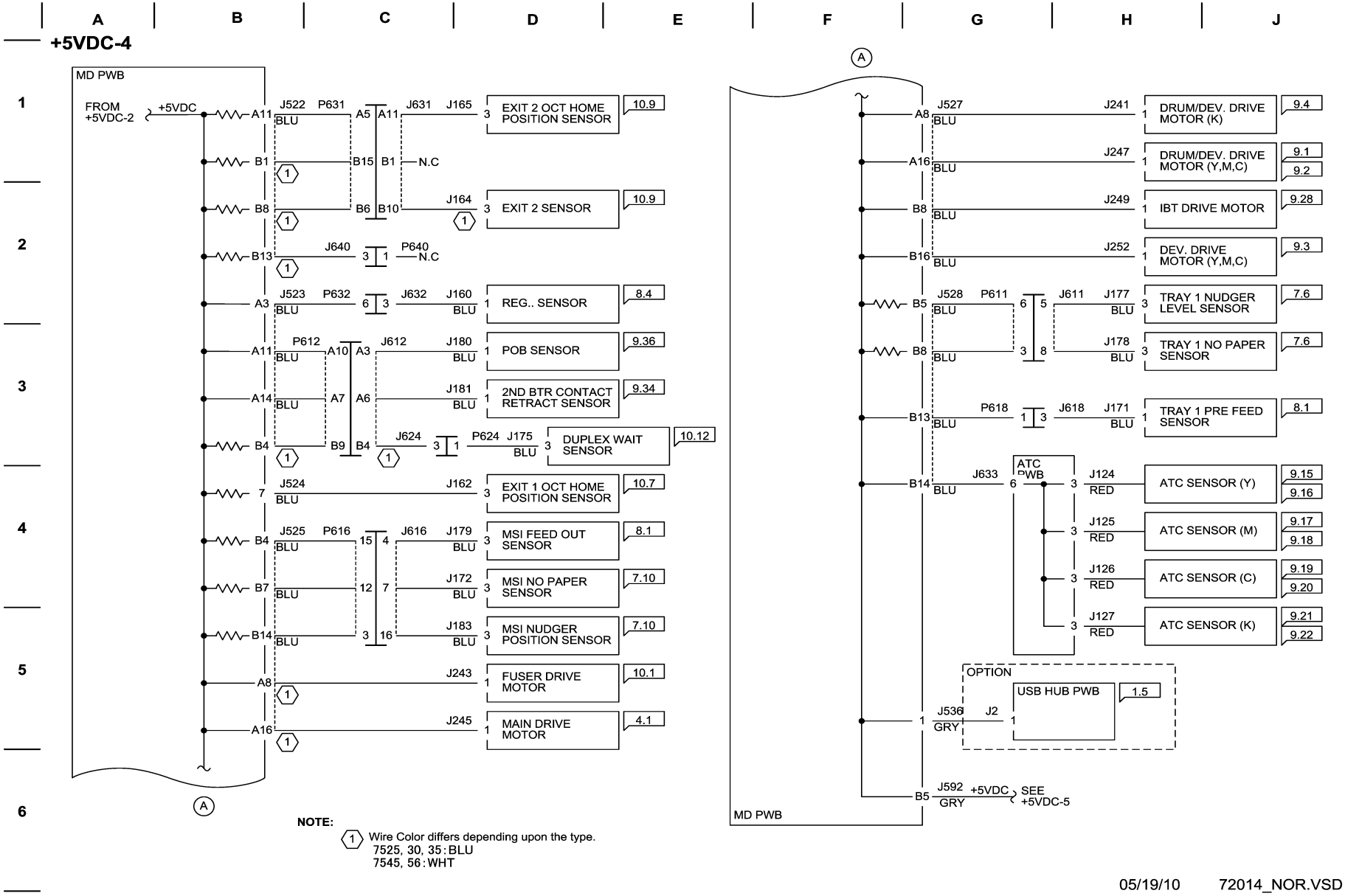

Figure 1 +5VDC-4 Wirenet

+5VDC-5 Wirenet

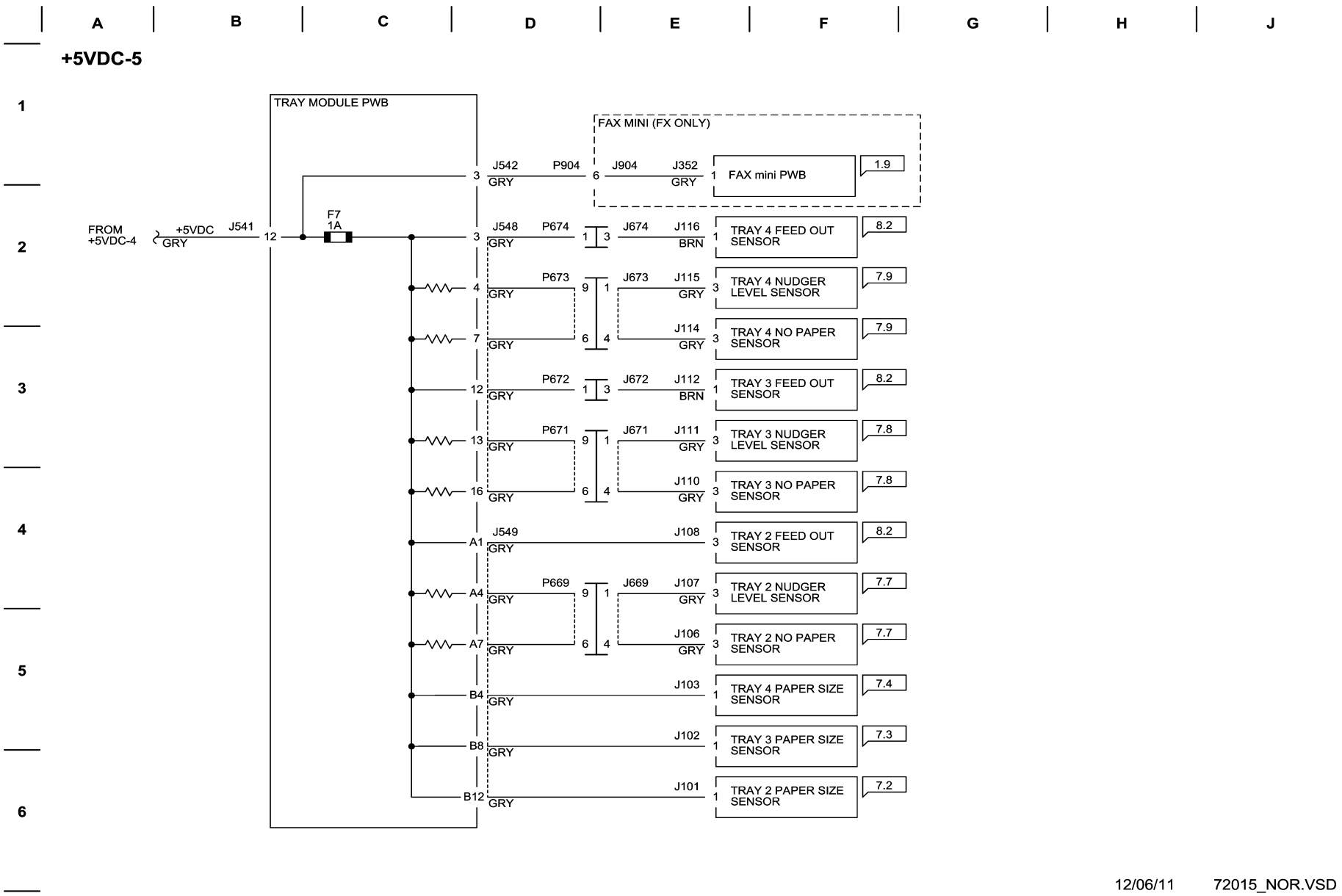

Figure 1 +5VDC-5 Wirenet

5VRTN-1 Wirenet

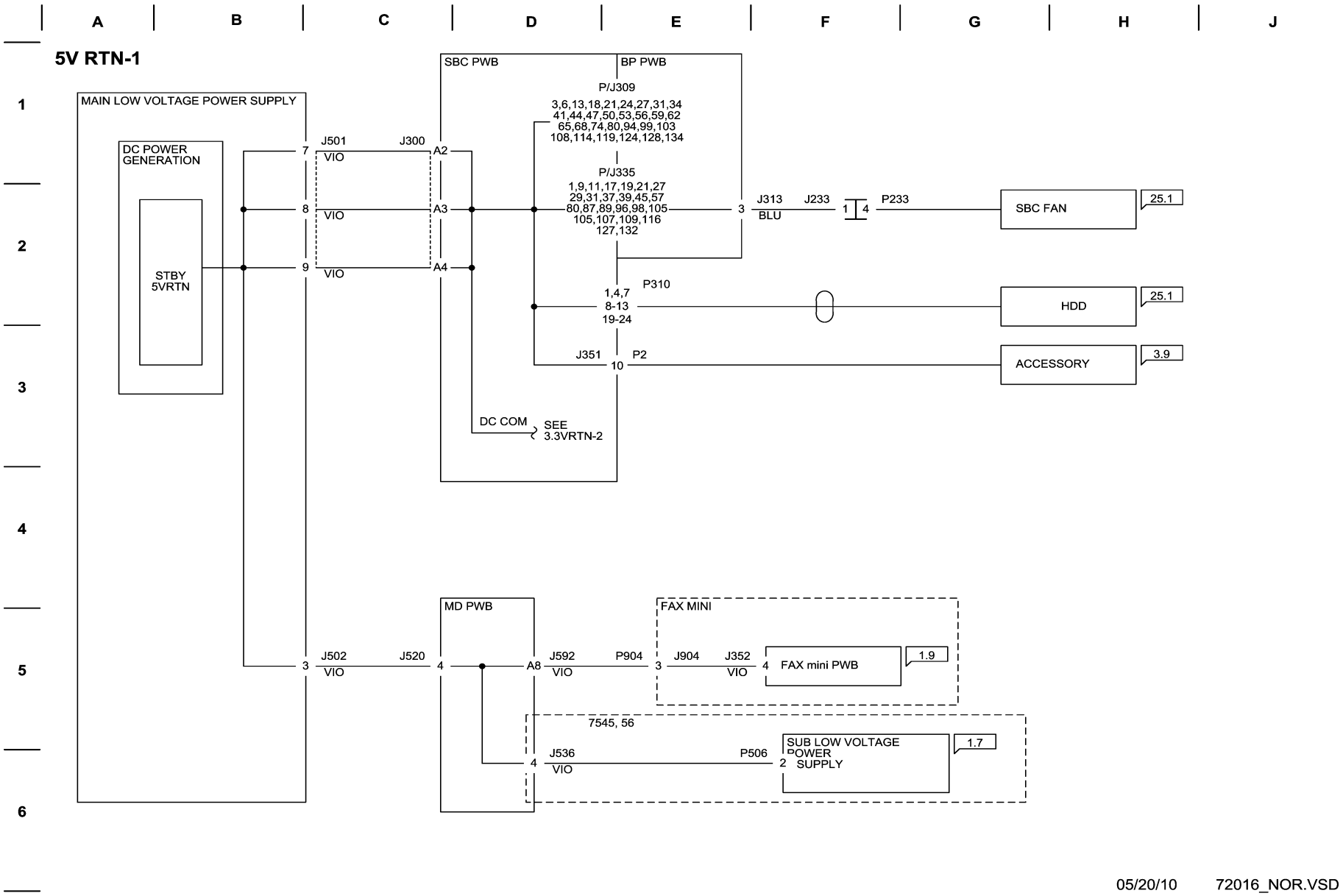

Figure 1 5VDC RTN-1 Wirenet

5VDC RTN-2 Wirenet

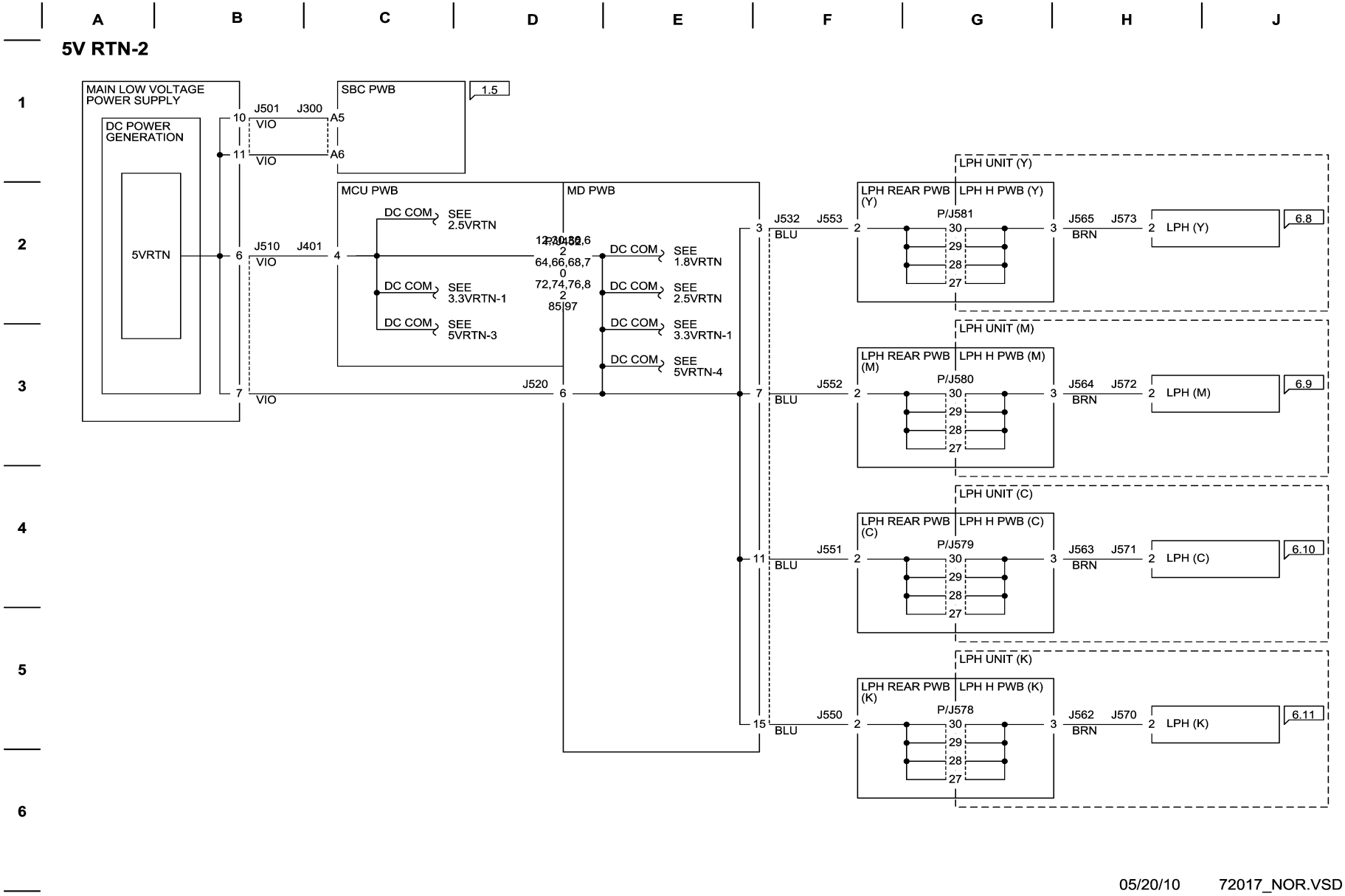

Figure 1 5VDC RTN-2 Wirenet

5VDC RTN-3 Wirenet

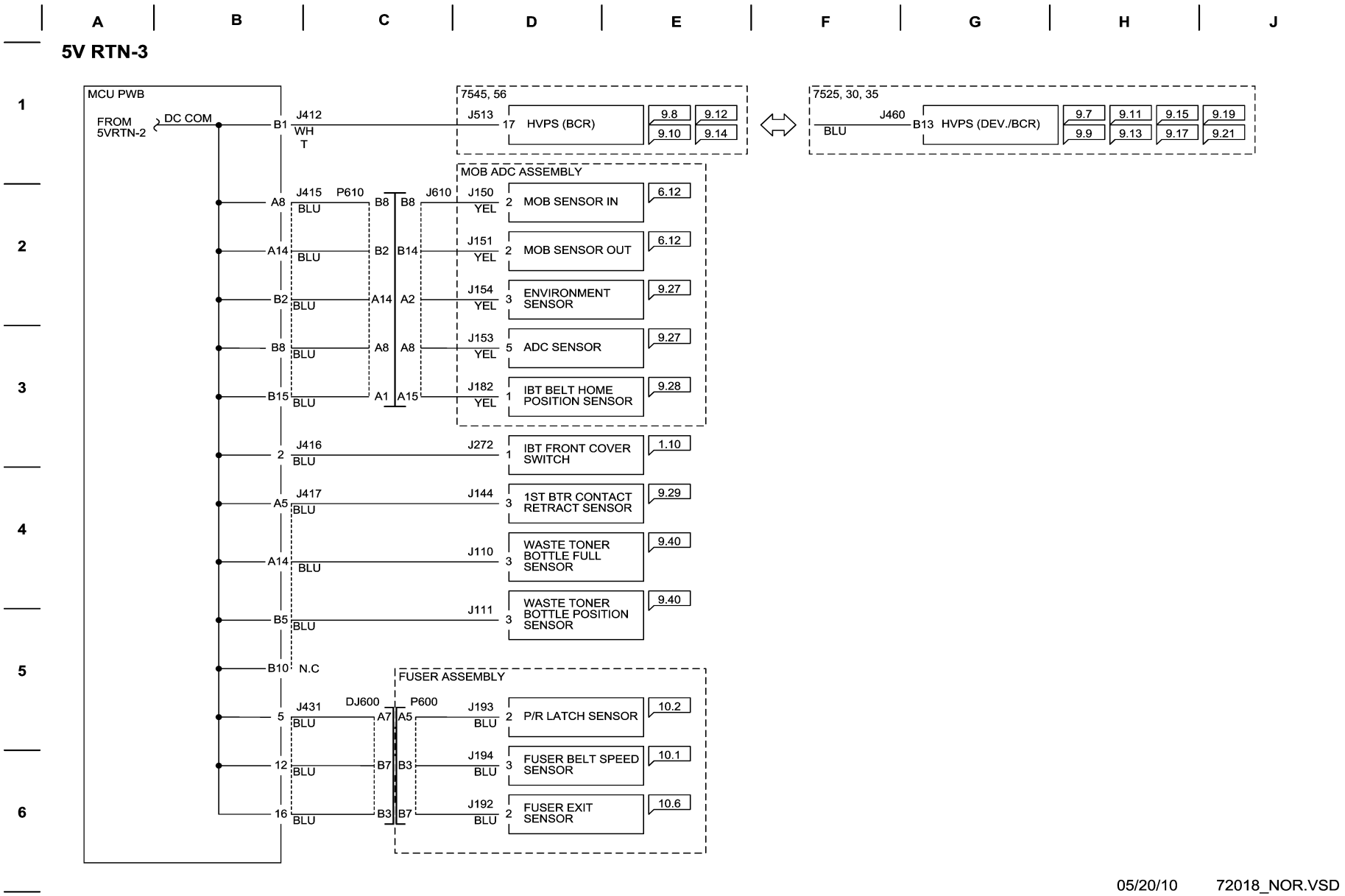

Figure 1 5VDC RTN-3 Wirenet

5VDC RTN-4 Wirenet

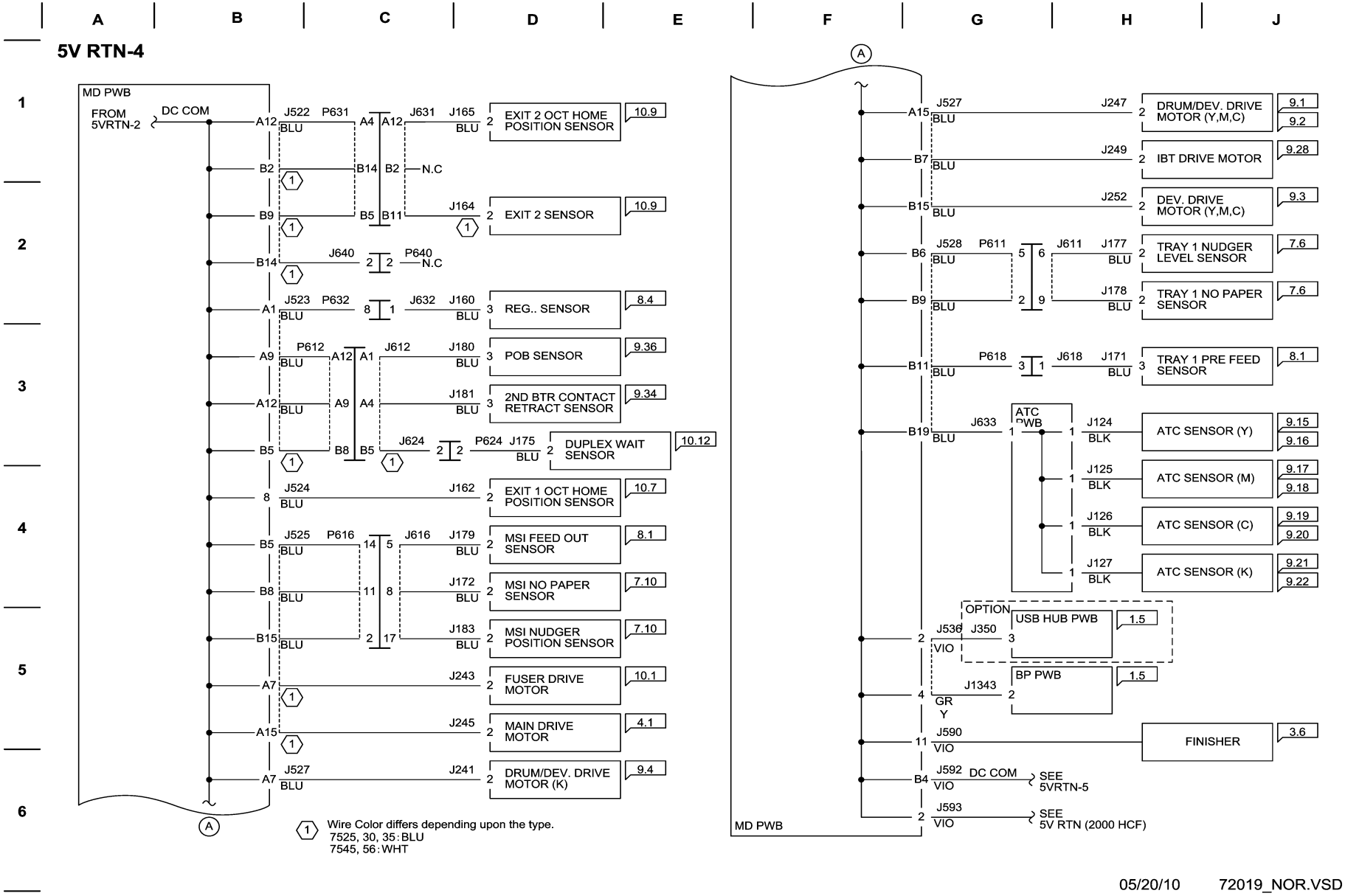

Figure 1 5VDC RTN-4 Wirenet

5VDC RTN-5 Wirenet

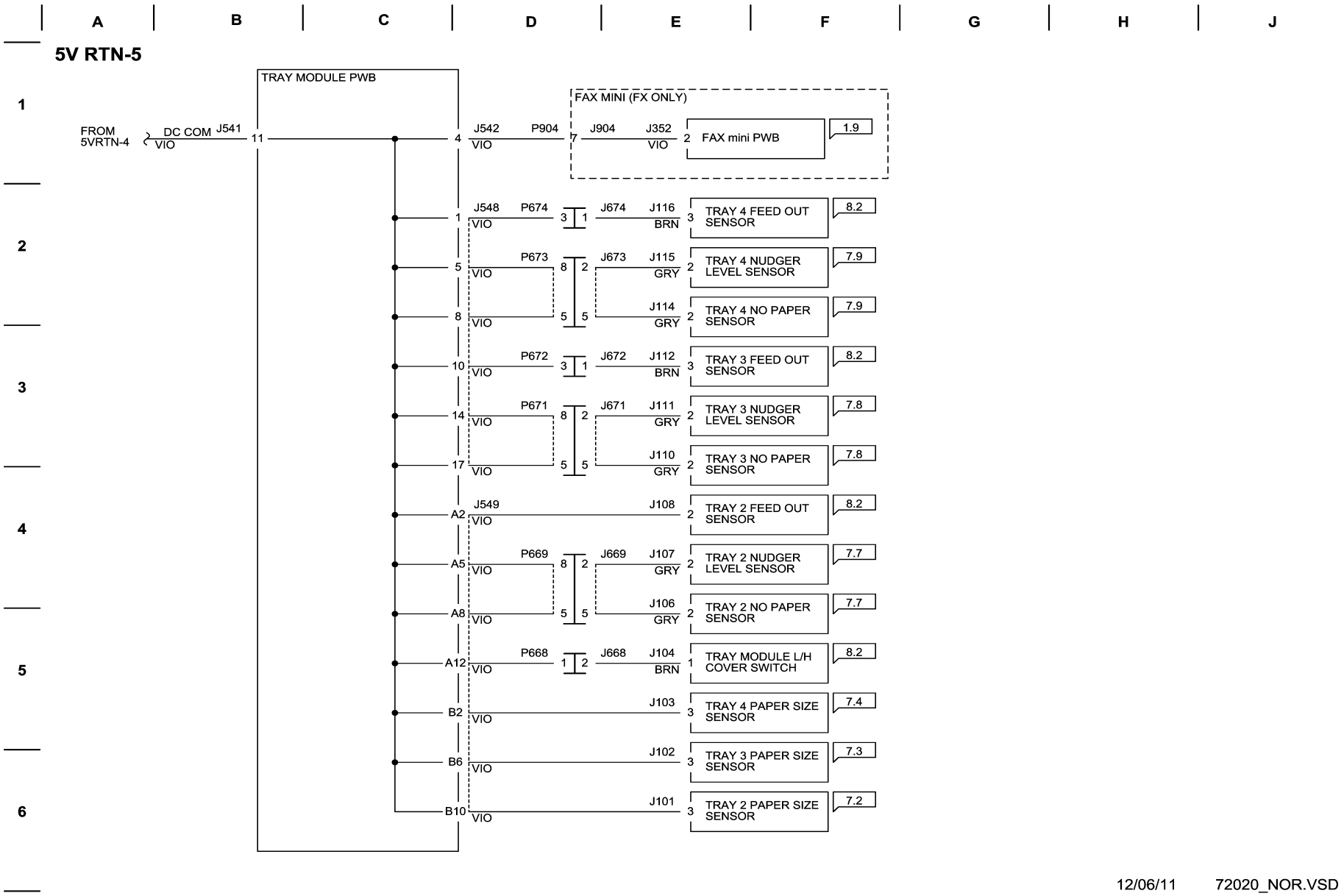

Figure 1 5VDC RTN-5 Wirenet

+24VDC-1 Wirenet

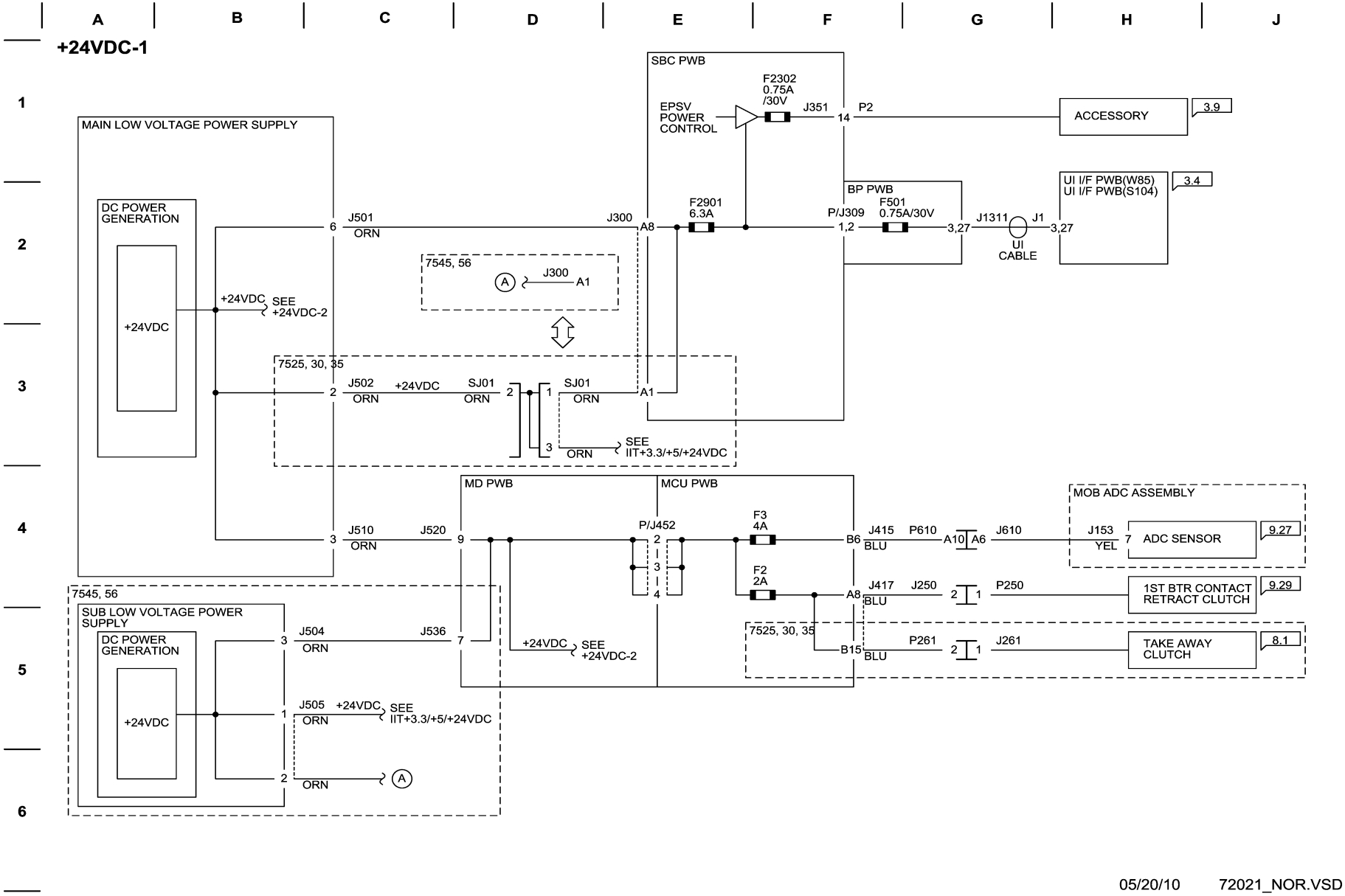

Figure 1 +24VDC-1 Wirenet

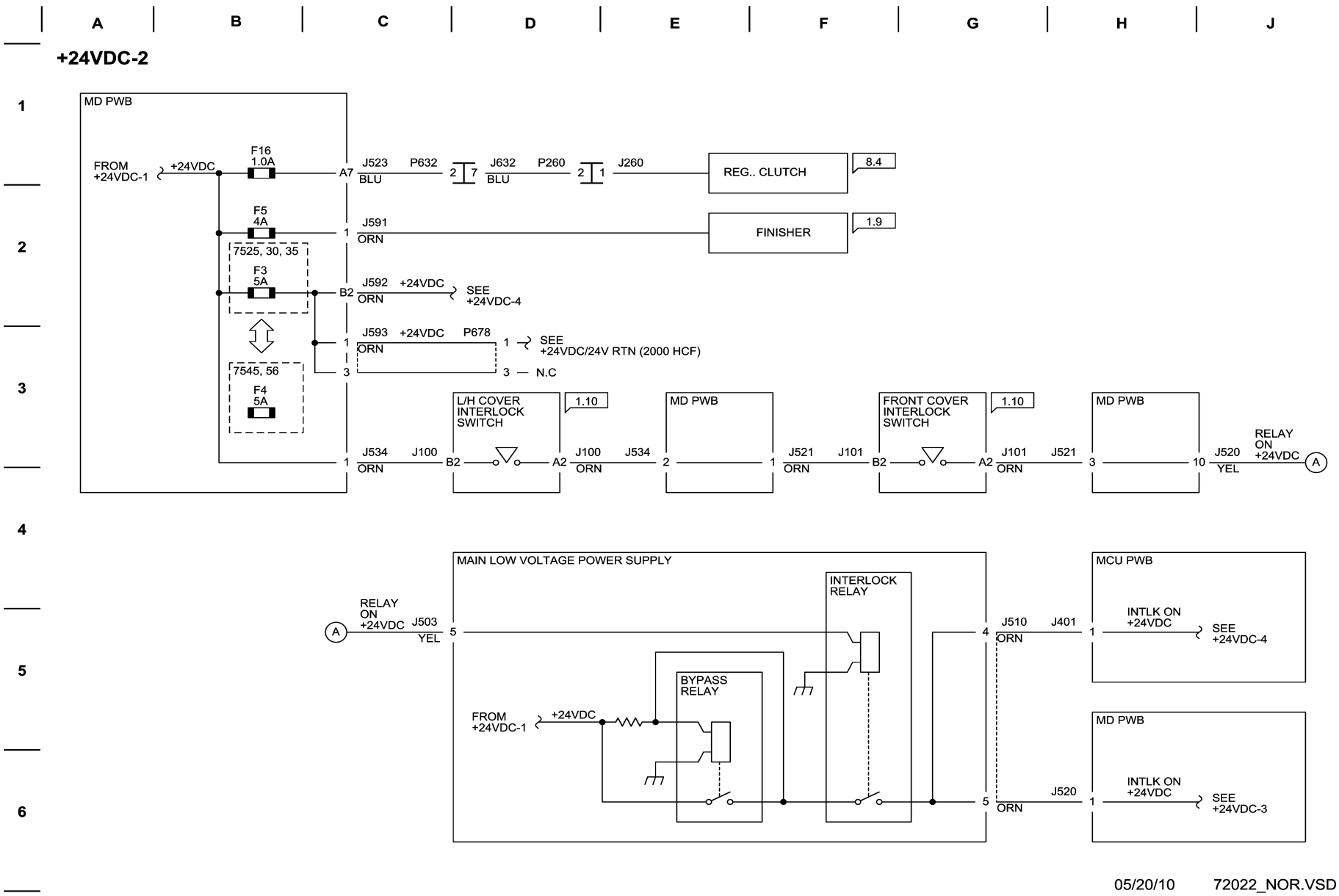

Figure 1 +24VDC-2 Wirenet

+24VDC-3 Wirenet

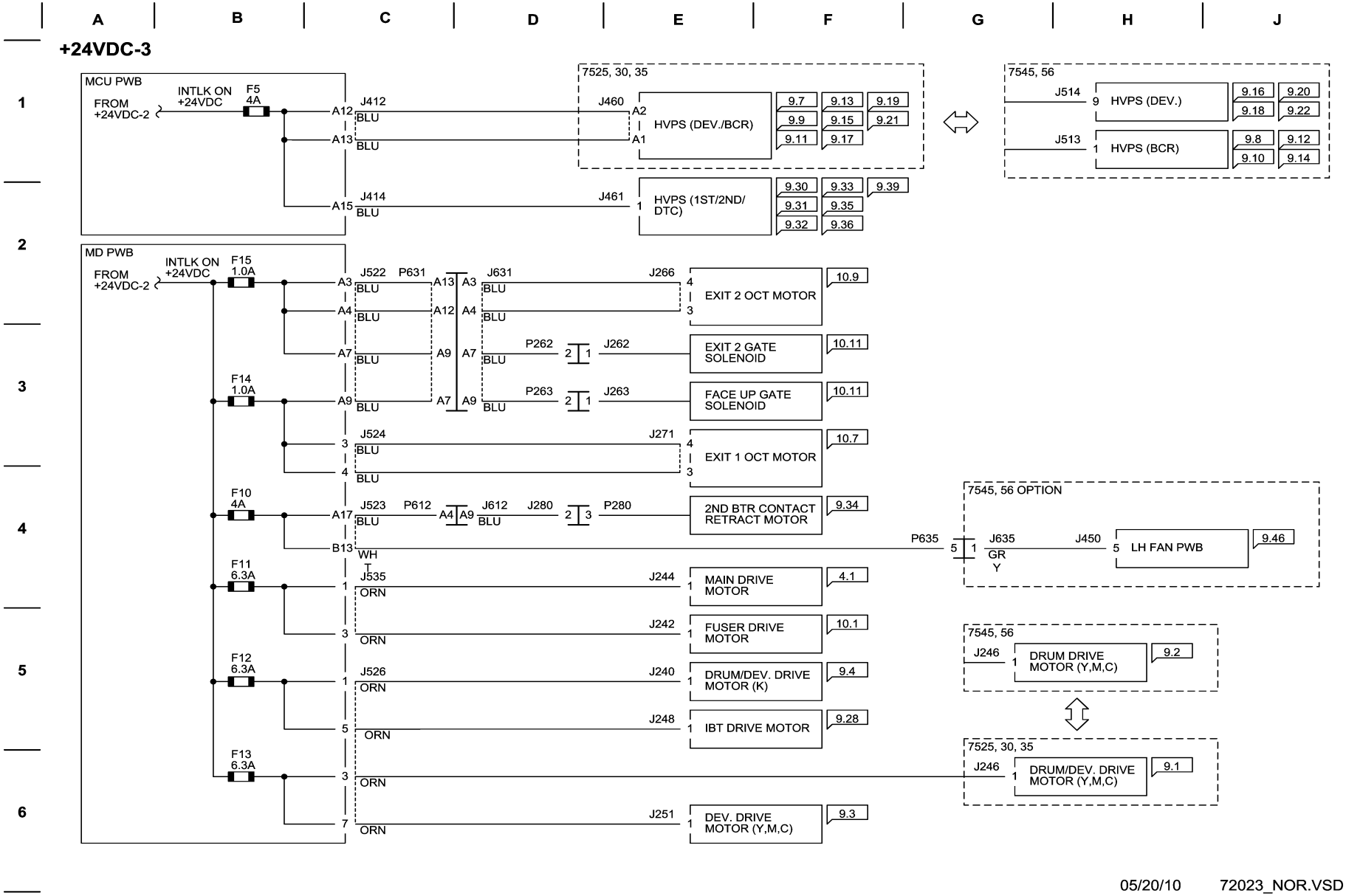

Figure 1 +24VDC-3 Wirenet

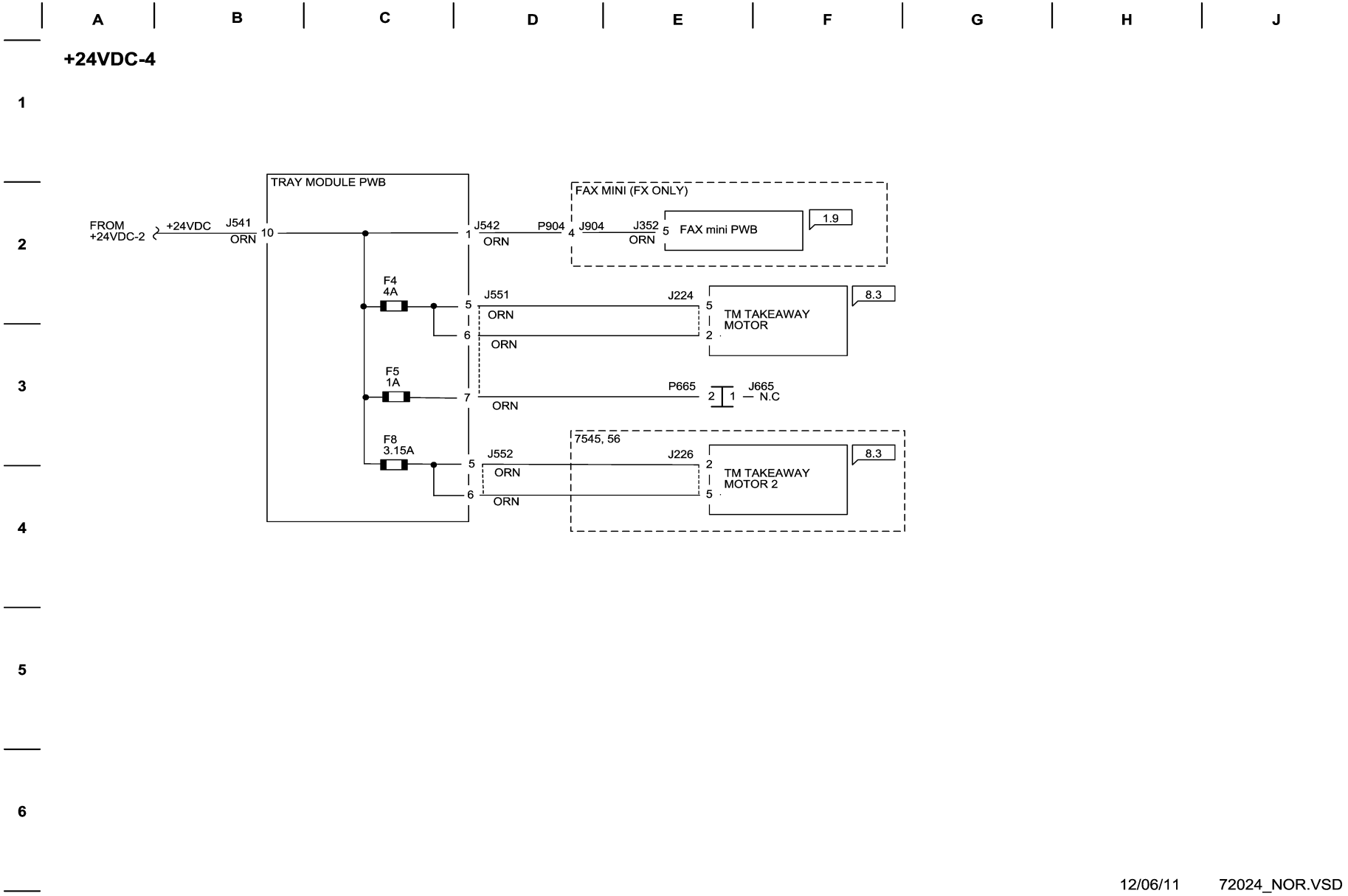

Figure 1 +24VDC-4 Wirenet

24VDC RTN-1 Wirenet

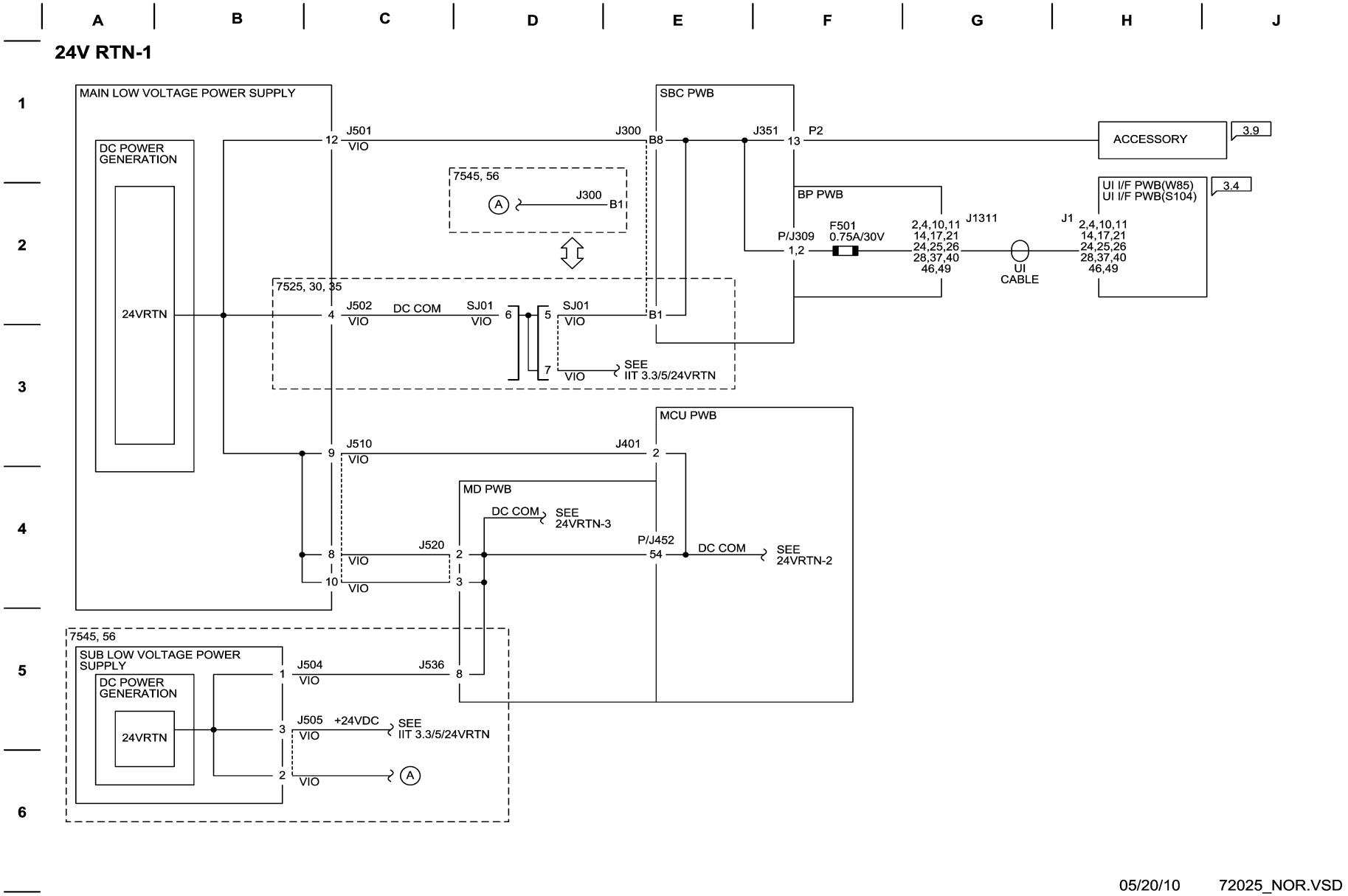

Figure 1 24VDC RTN-1 Wirenet

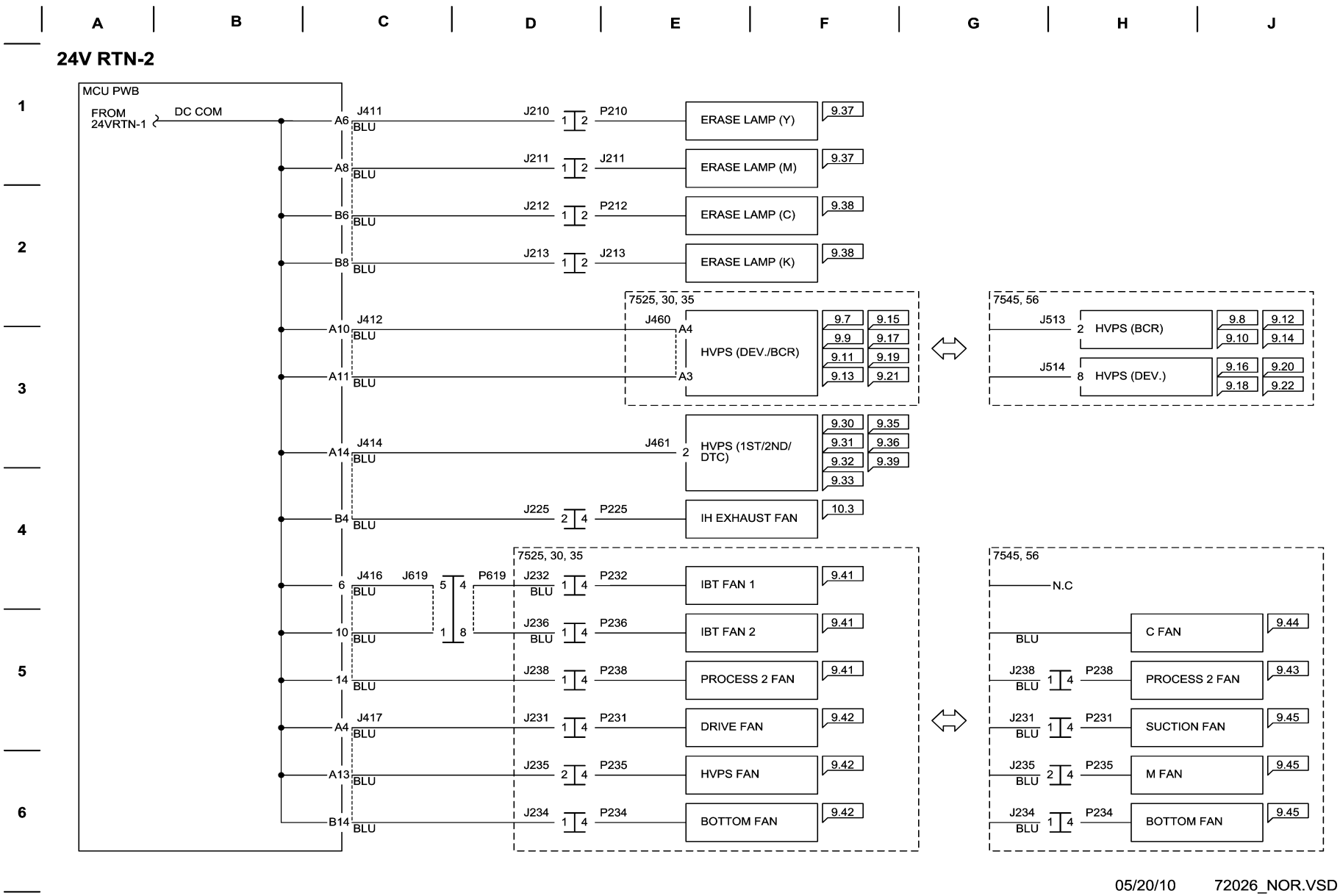

Figure 1 24VDC RTN-2 Wirenet

24VDC RTN-3 Wirenet

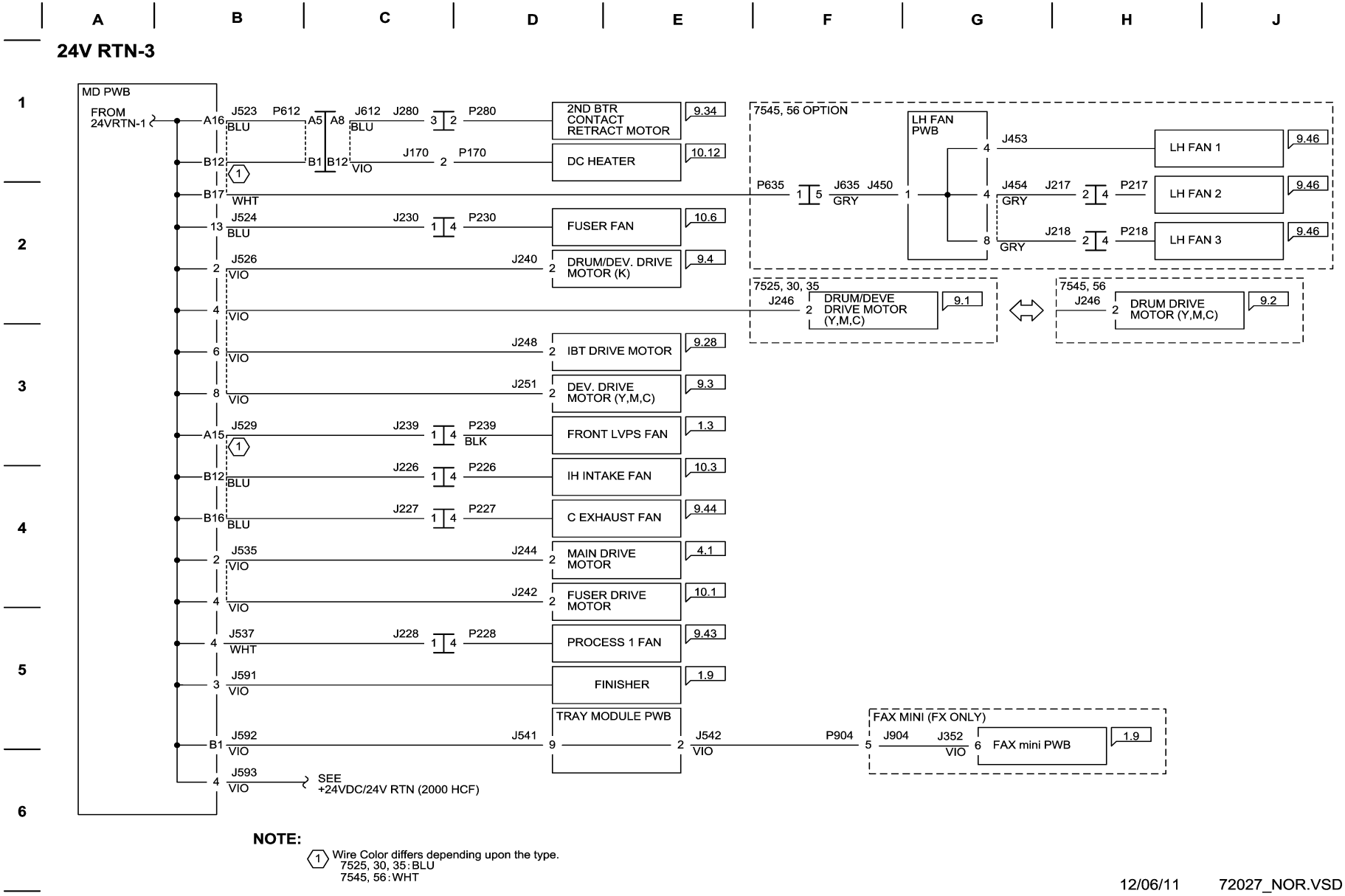

Figure 1 24VDC RTN-3 Wirenet

IIT +3.3/+5/+24VDC Wirenet

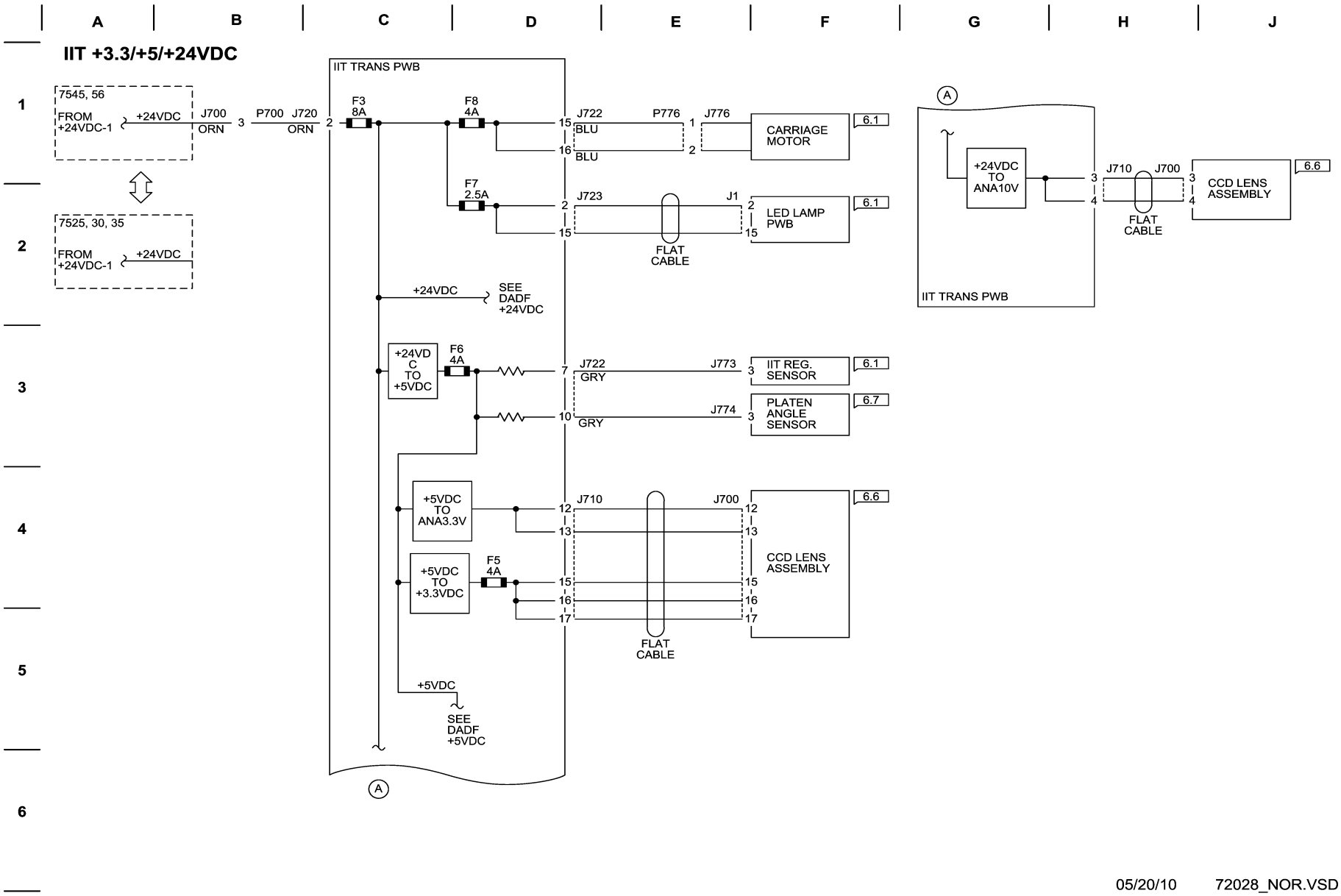

Figure 1 IIT +3.3/+5/+24VDC Wirenet

IIT_3.3/5/24VRTN Wirenet

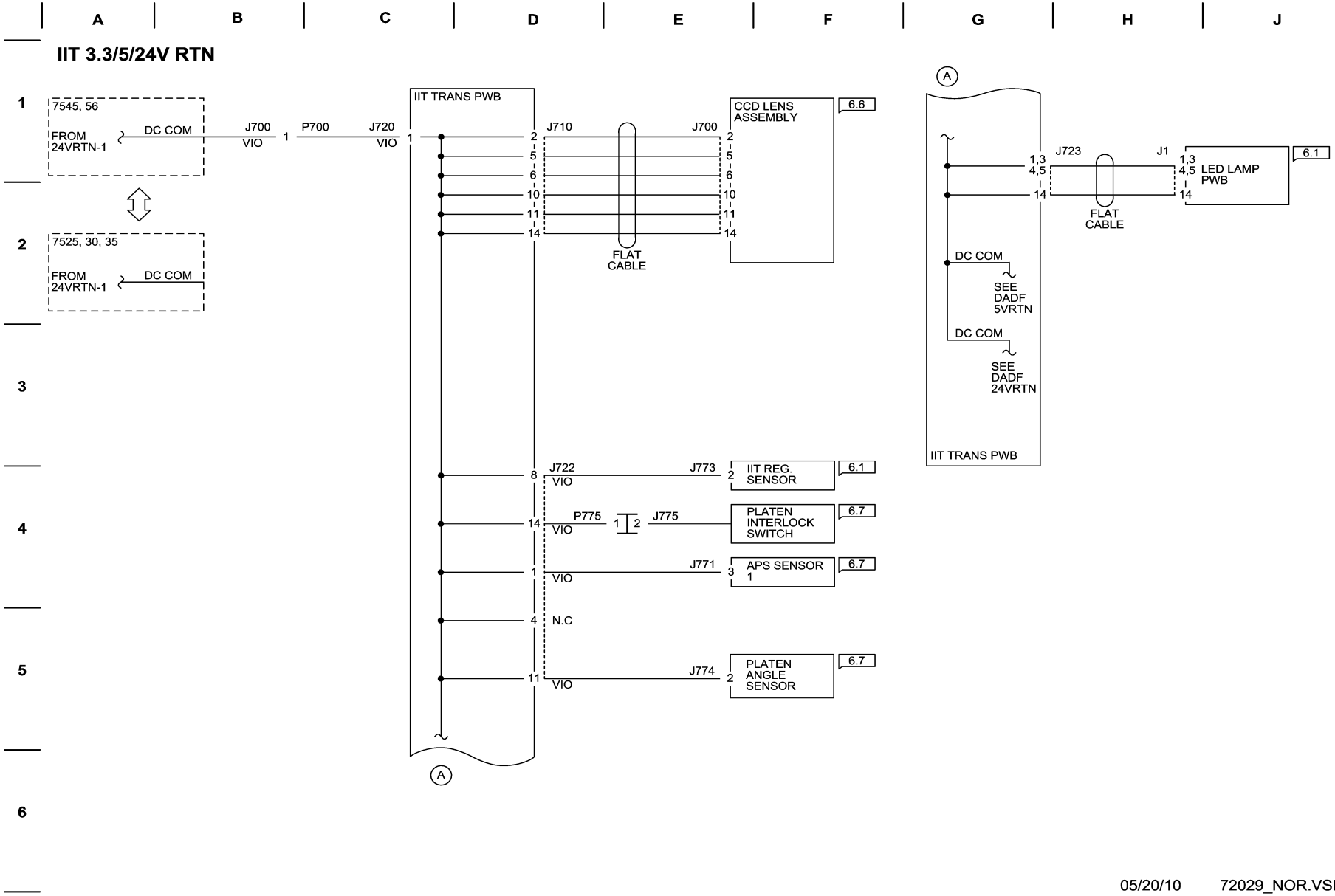

Figure 1 IIT_3.3/5/24VRTN Wirenet

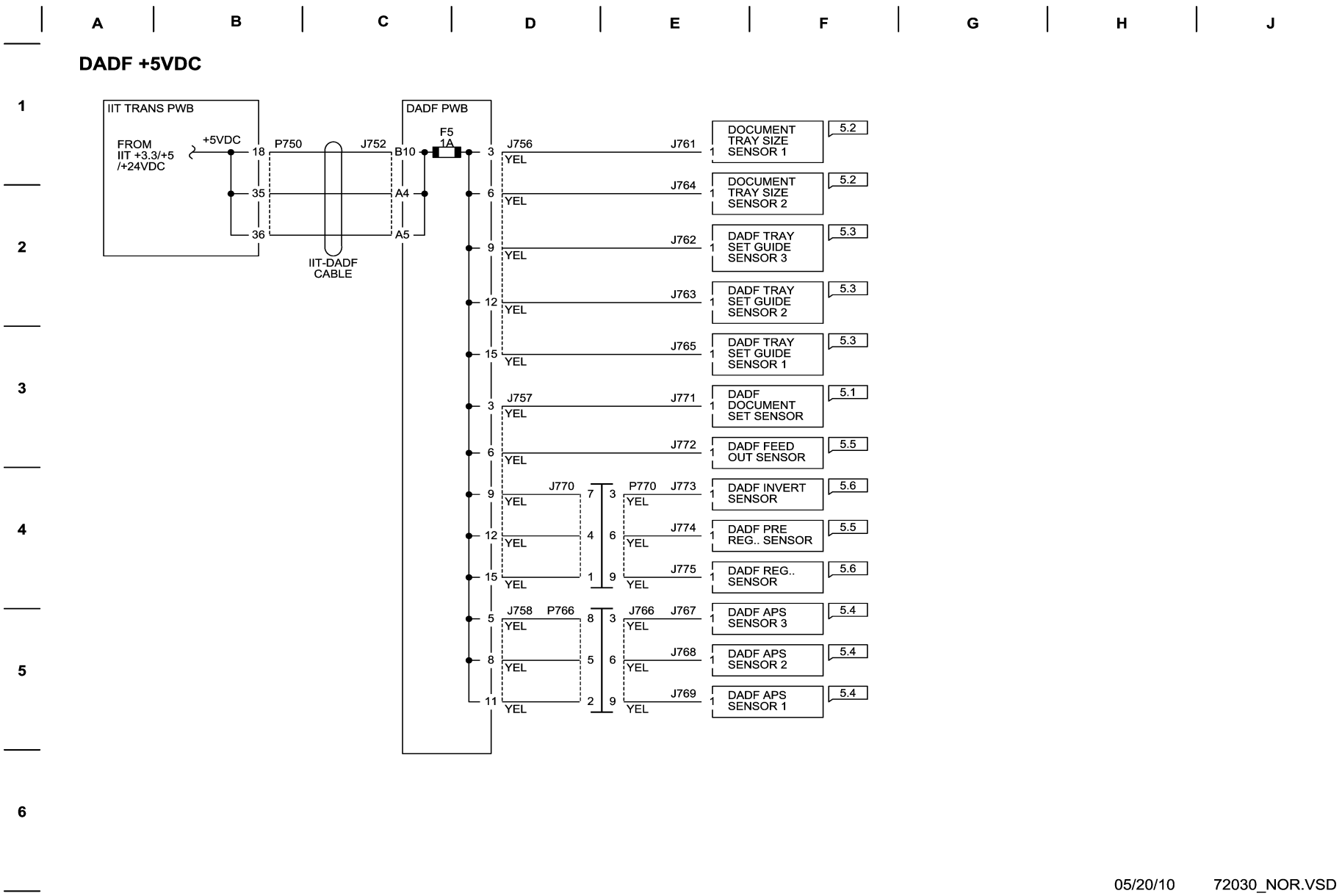

Figure 1 DADF_+5VDC Wirenet

7.2.31 DADF 5VRTN

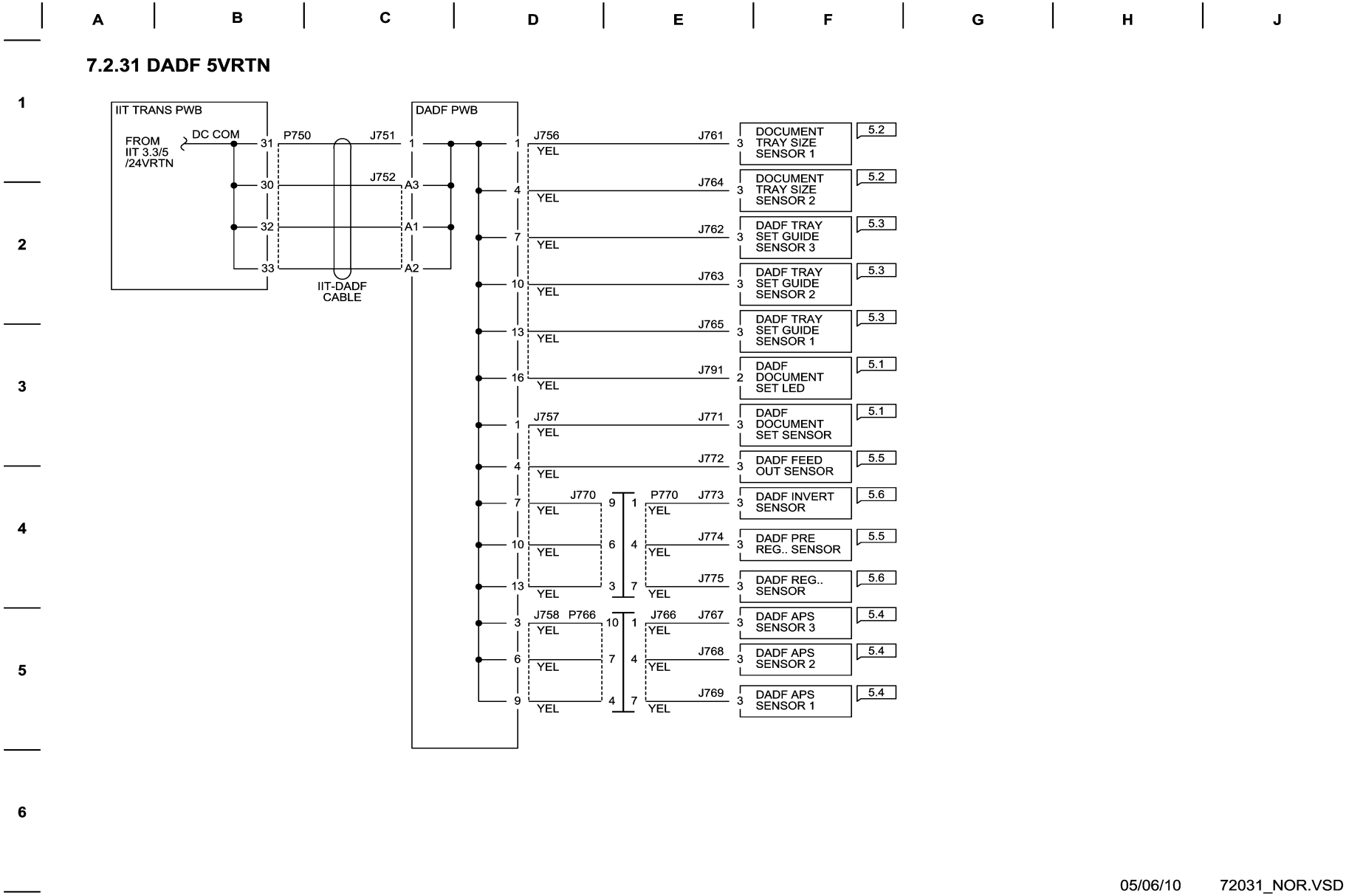

Figure 1 DADF_5VRTN Wirenet

DADF_+24VDC Wirenet

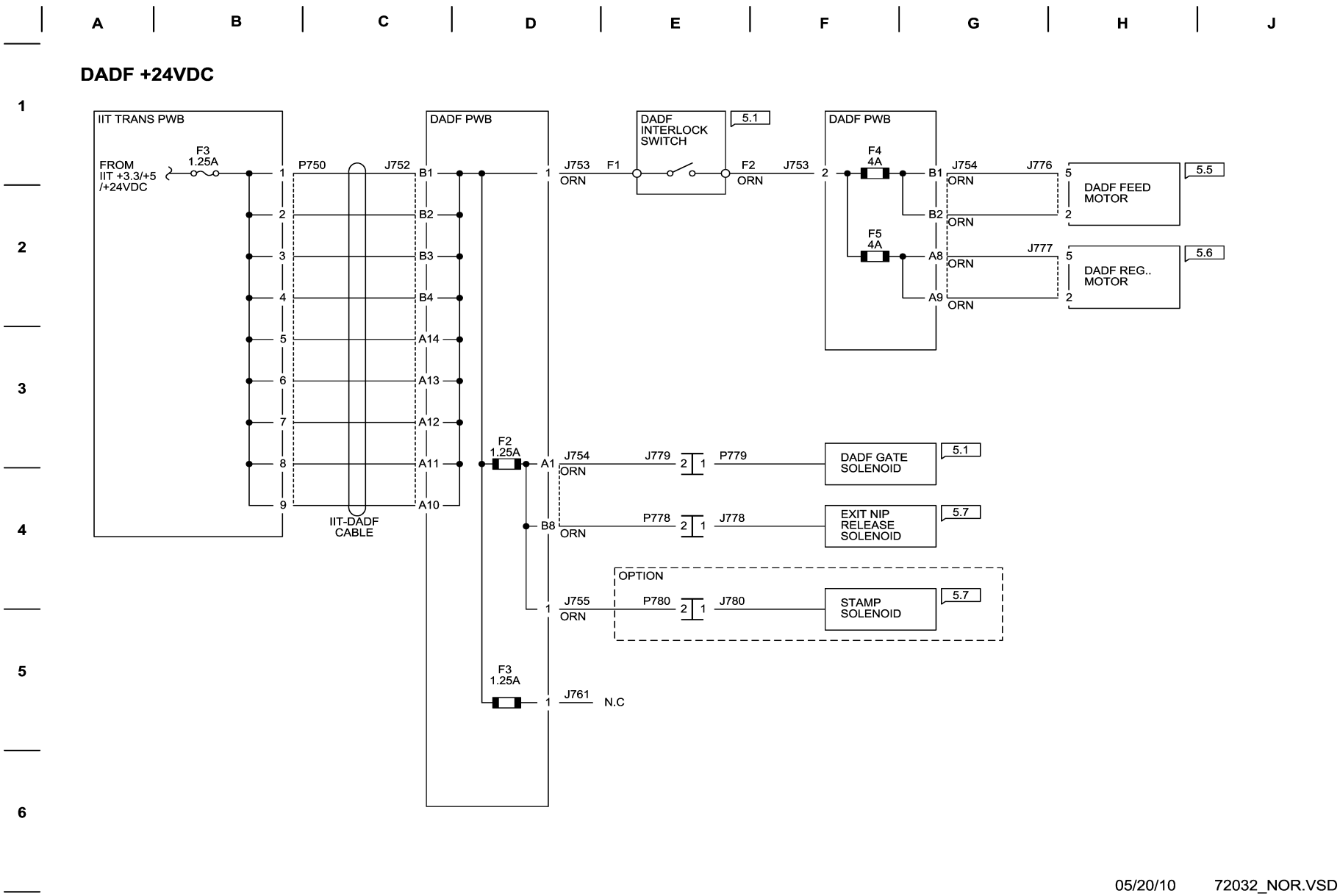

Figure 1 DADF_+24VDC Wirenet

DADF +24VRTN Wirenet

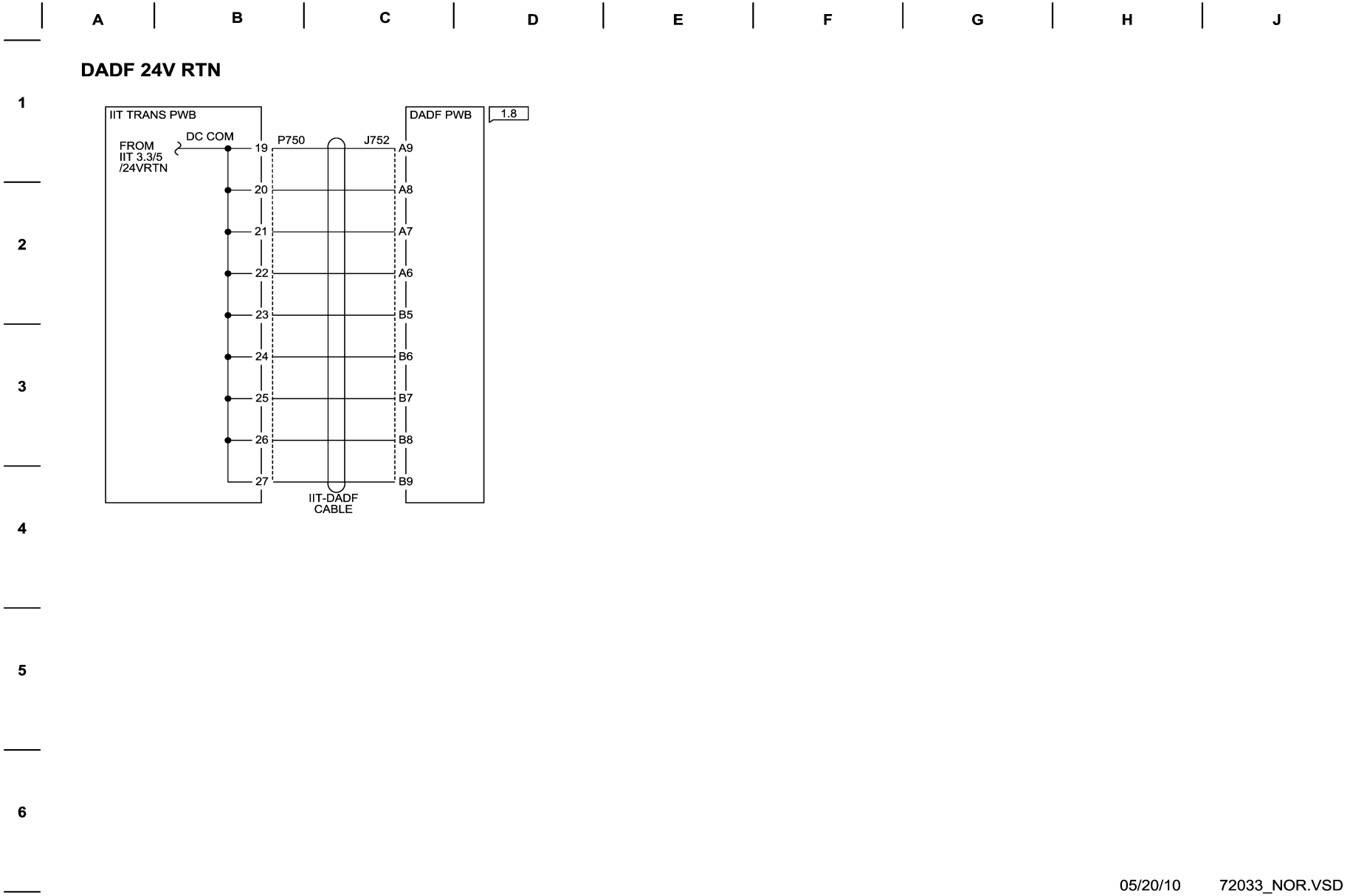

Figure 1 DADF_24VRTN Wirenet

HCF +24VDC WIRENET

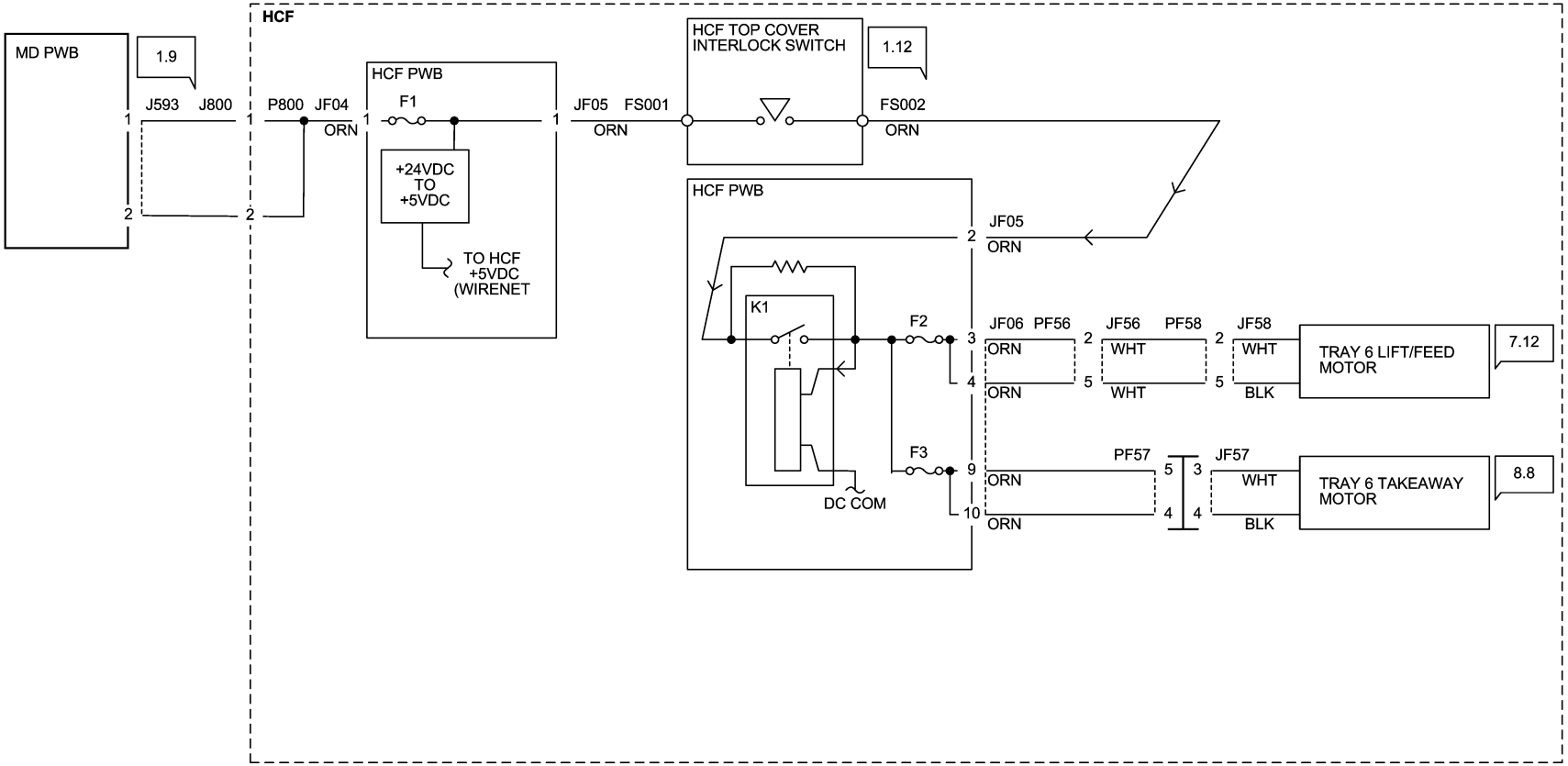

72034_NOR.VSD
11/30/11

Figure 1 HCF +24VDC Wirenet

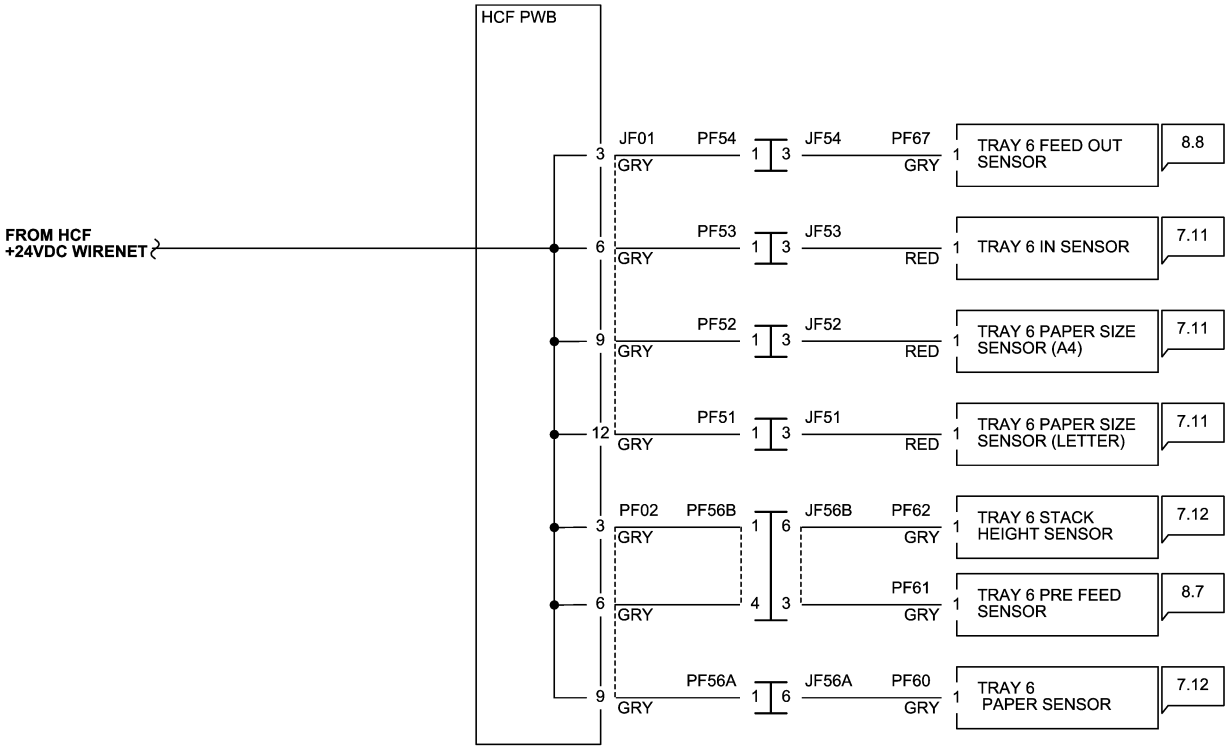

72035_NOR.VSD

11/30/11

Figure 1 HCF +5VDC Wirenet

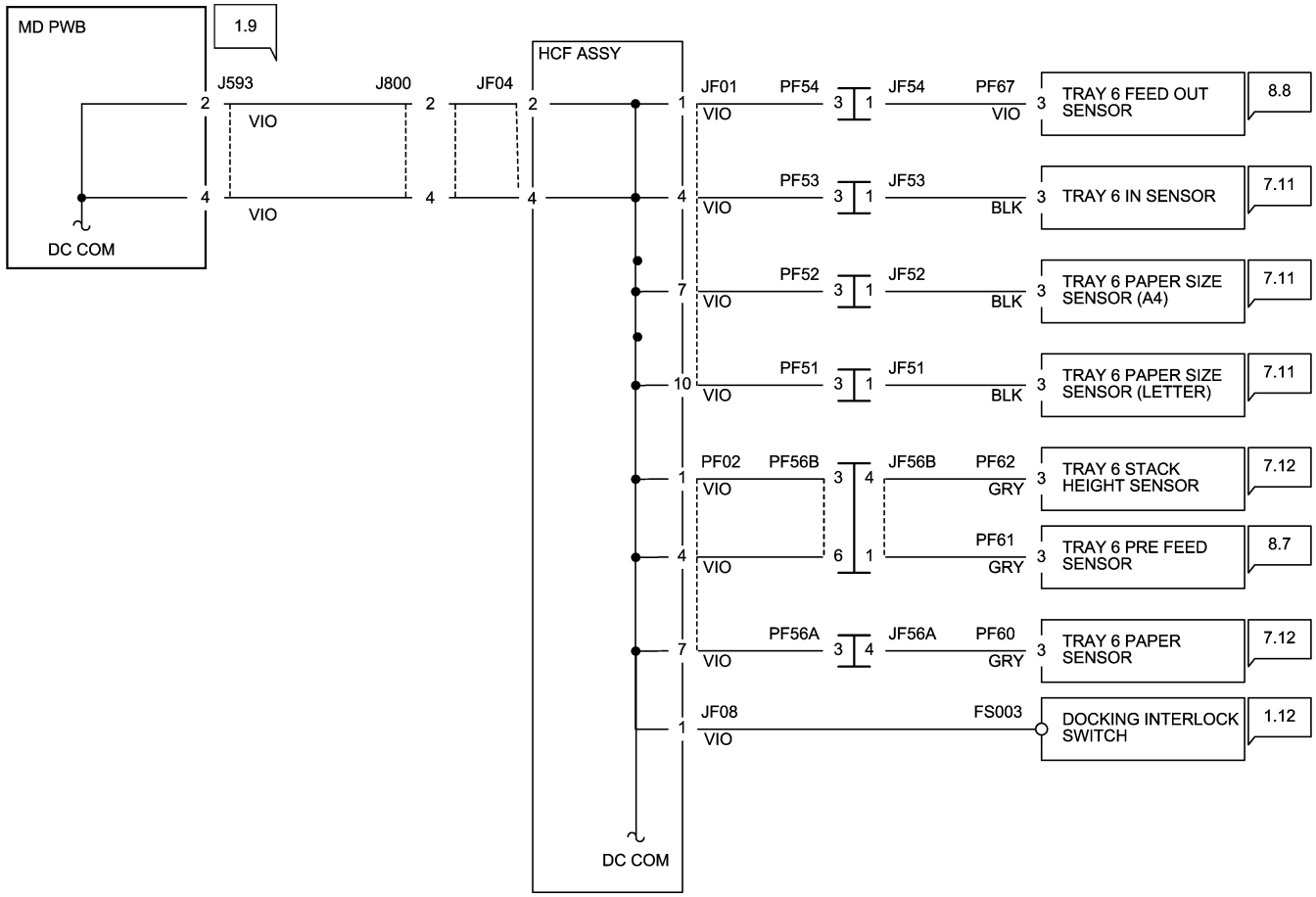

Figure 1 HCF DC COM Wirenet

INTEGRATED OFFICE FINISHER +24VDC/24V RTN WIRENET

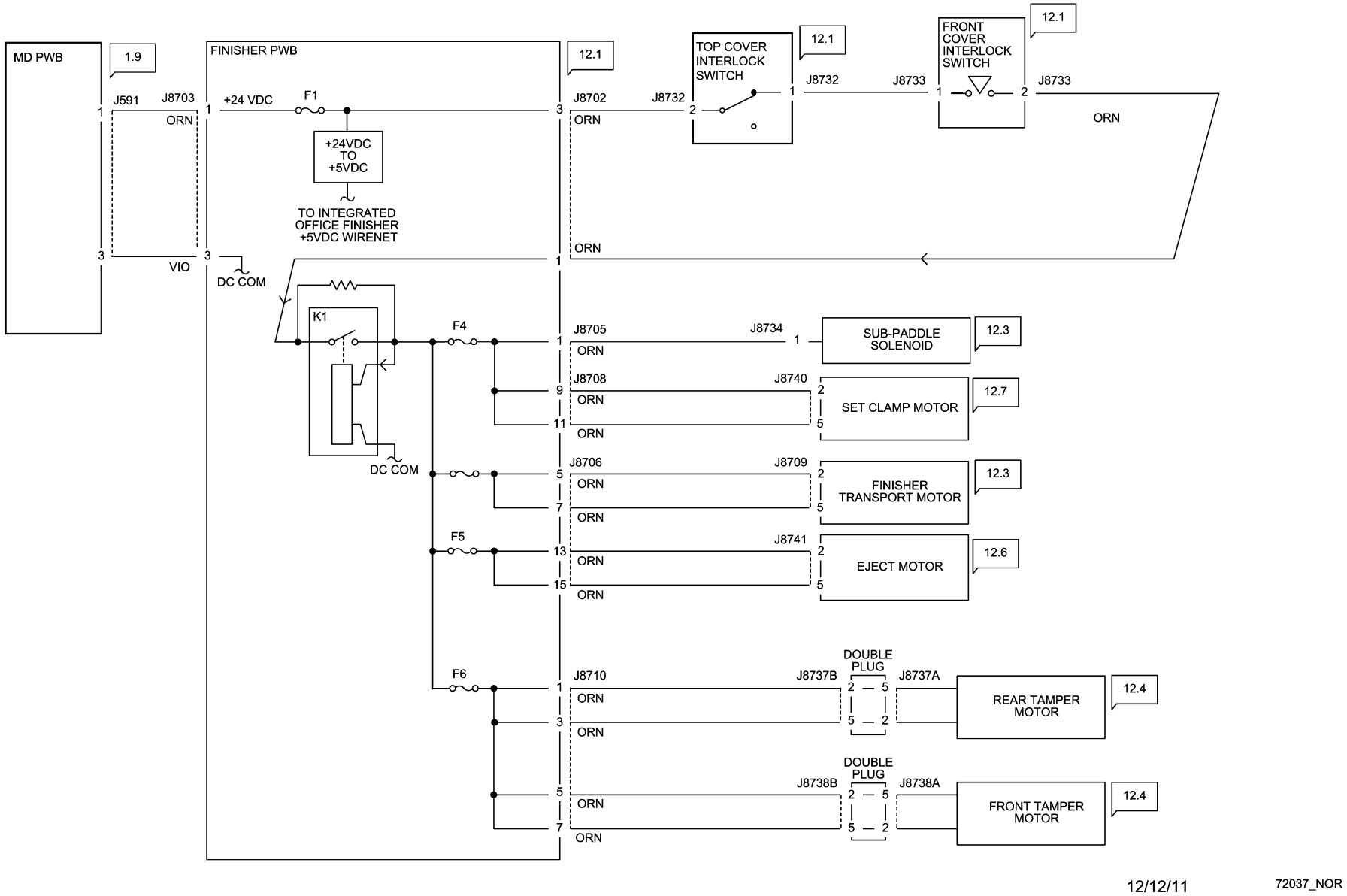

Figure 1 Int. Office Finisher +24VDC/24VDC RTN Wirenets

INTEGRATED OFFICE FINISHER +5VDC WIRENET

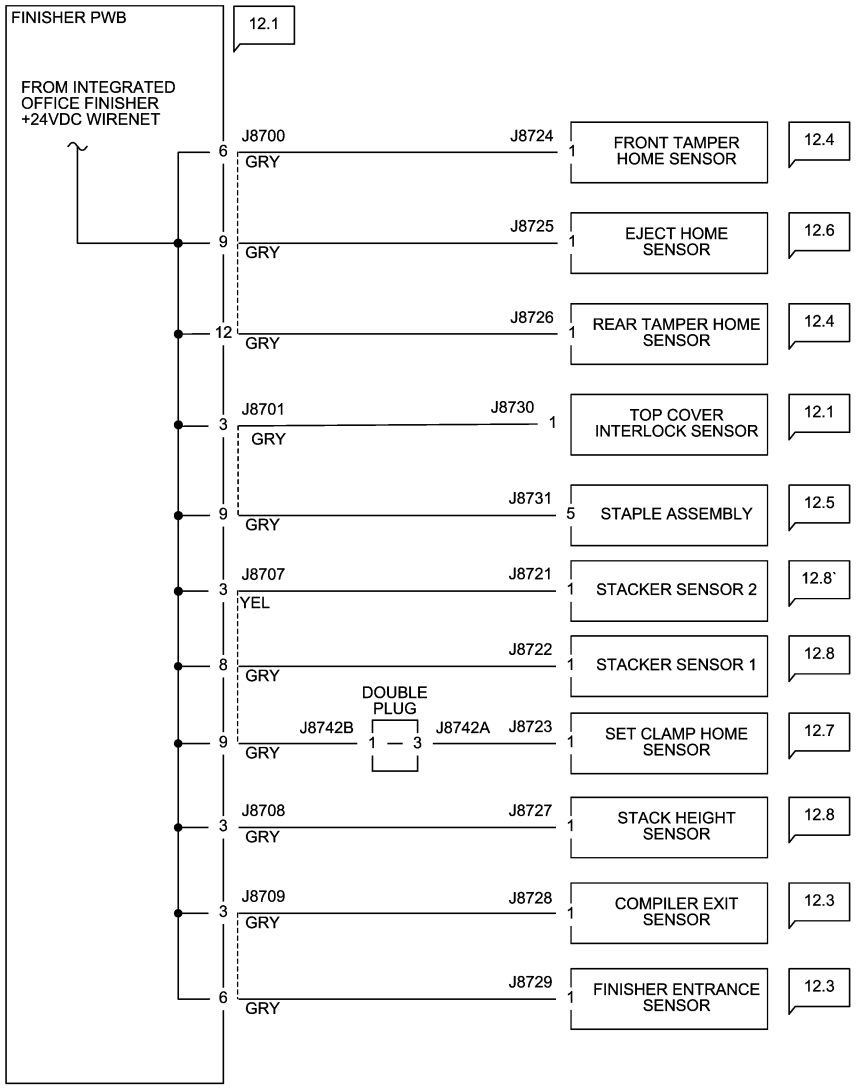

Figure 1 Int. Office Finisher +5VDC Wirenet

INTEGRATED OFFICE FINISHER DC COM WIRENET

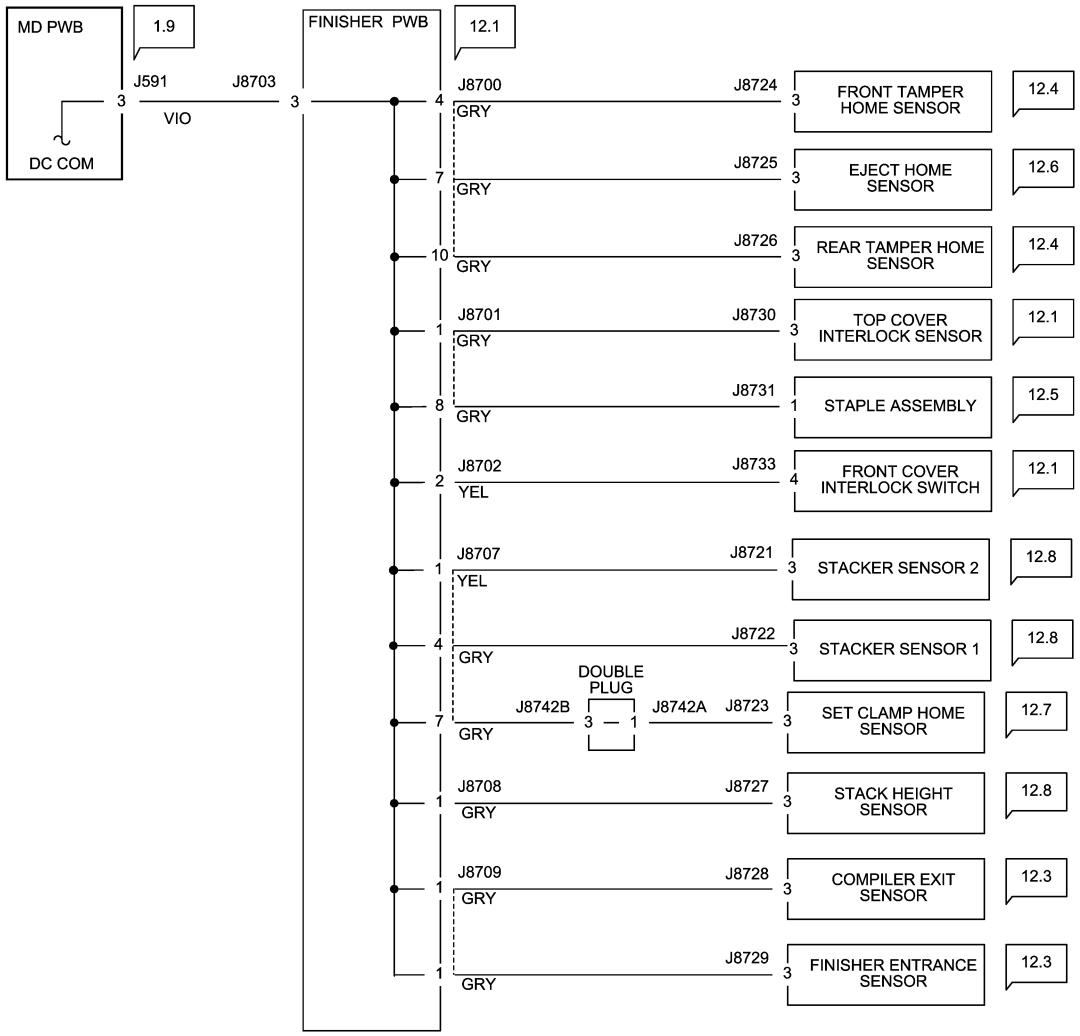

12/12/11 72039_NOR.VSD

Figure 1 Int. Office Finisher DC COM Wirenet

OFFICE FINISHER LX +24VDC WIRENET

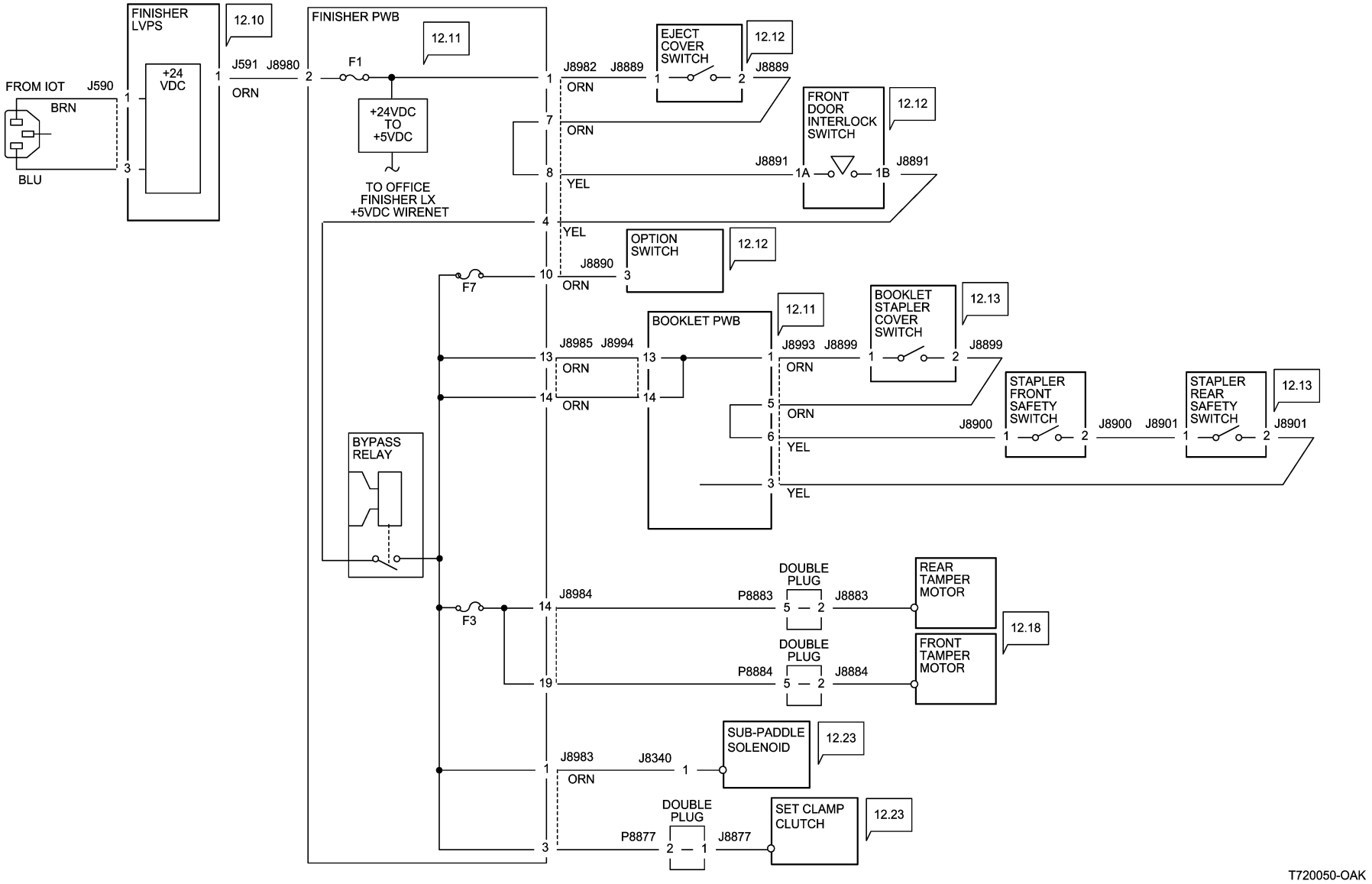

Figure 1 Office Finisher LX +24VDC Wirenet

OFFICE FINISHER LX +5VDC WIRENET

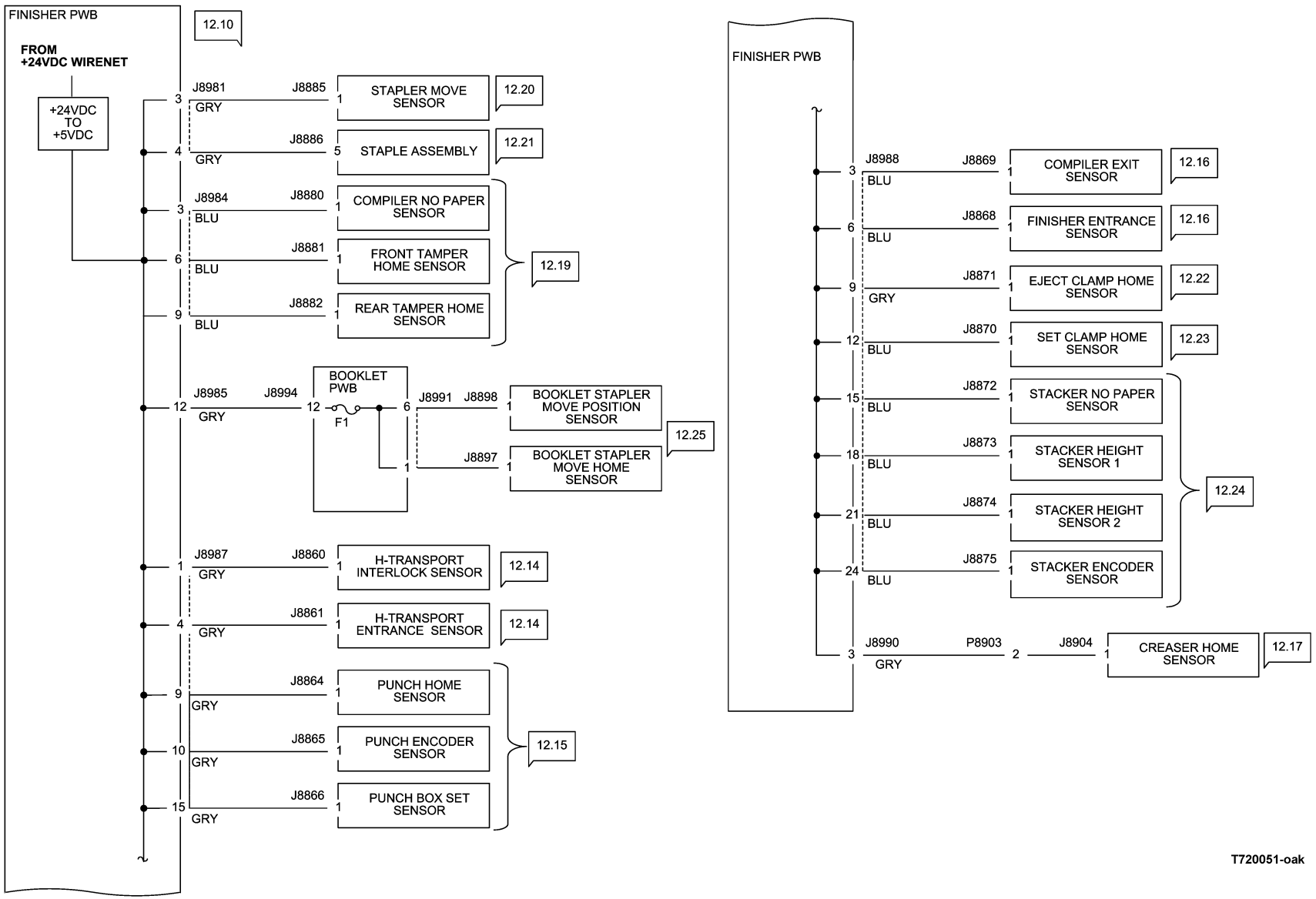

Figure 2 Office Finisher LX +5VDC Wirenet

OFFICE FINISHER LX DC COM WIRENET

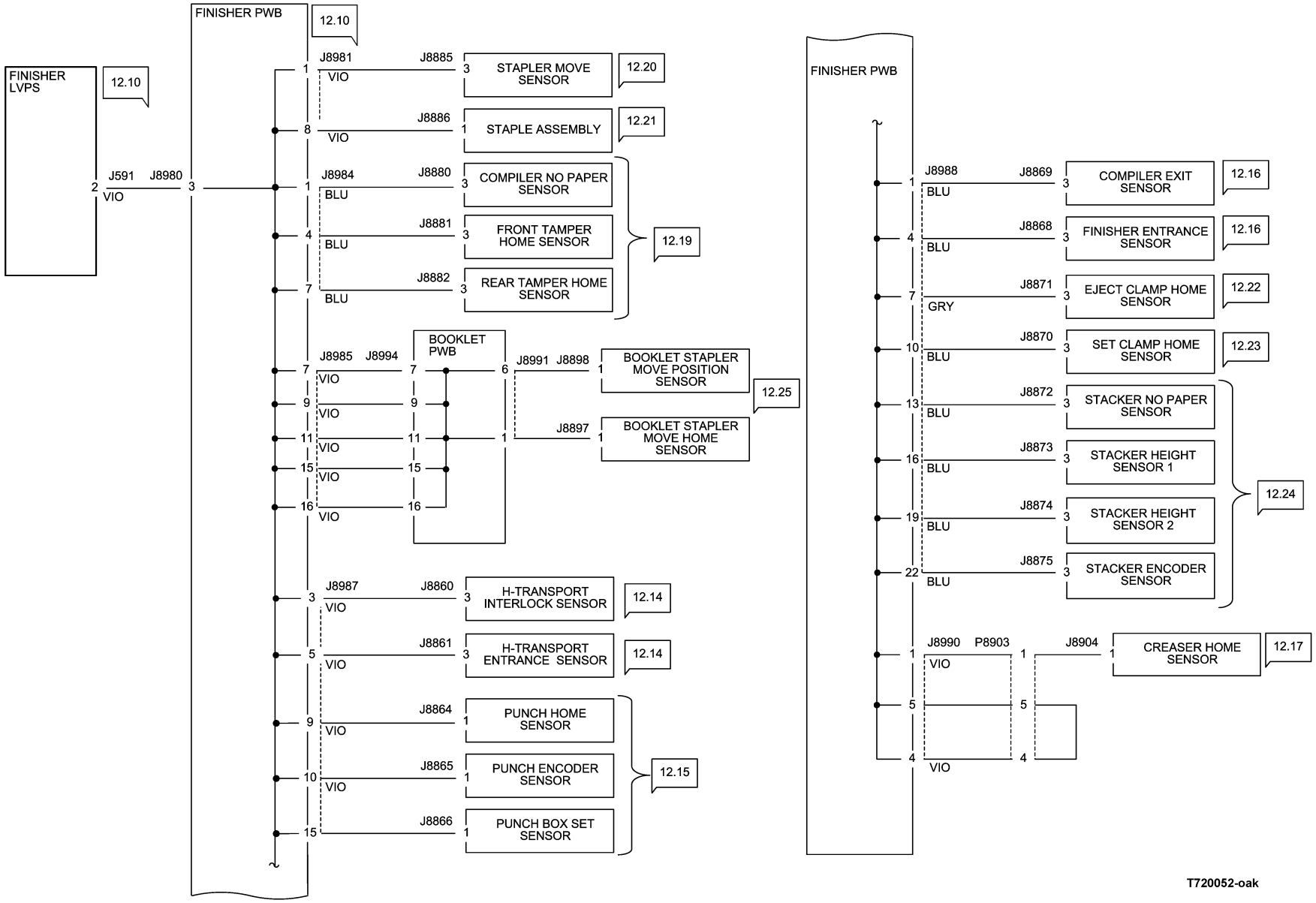

Figure 3 Office Finisher LX DC COM Wirenet

A/P FINISHER +24VDC DISTRIBUTION (1 0F 3)

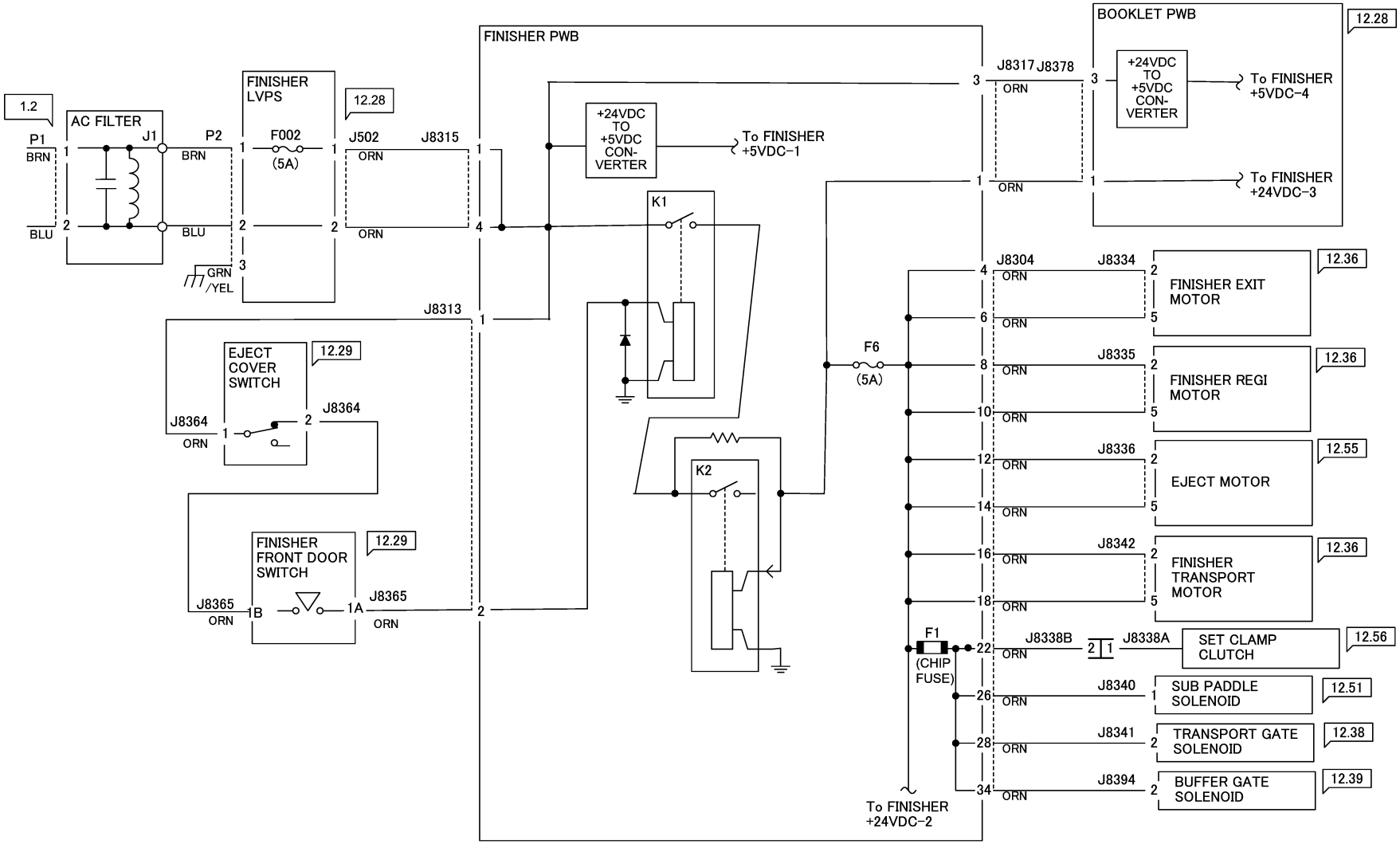

Figure 1 A/P Finisher +24VDC Wirenet (1 of 3)

A/P FINISHER +24VDC DISTRIBUTION (2 0F 3)

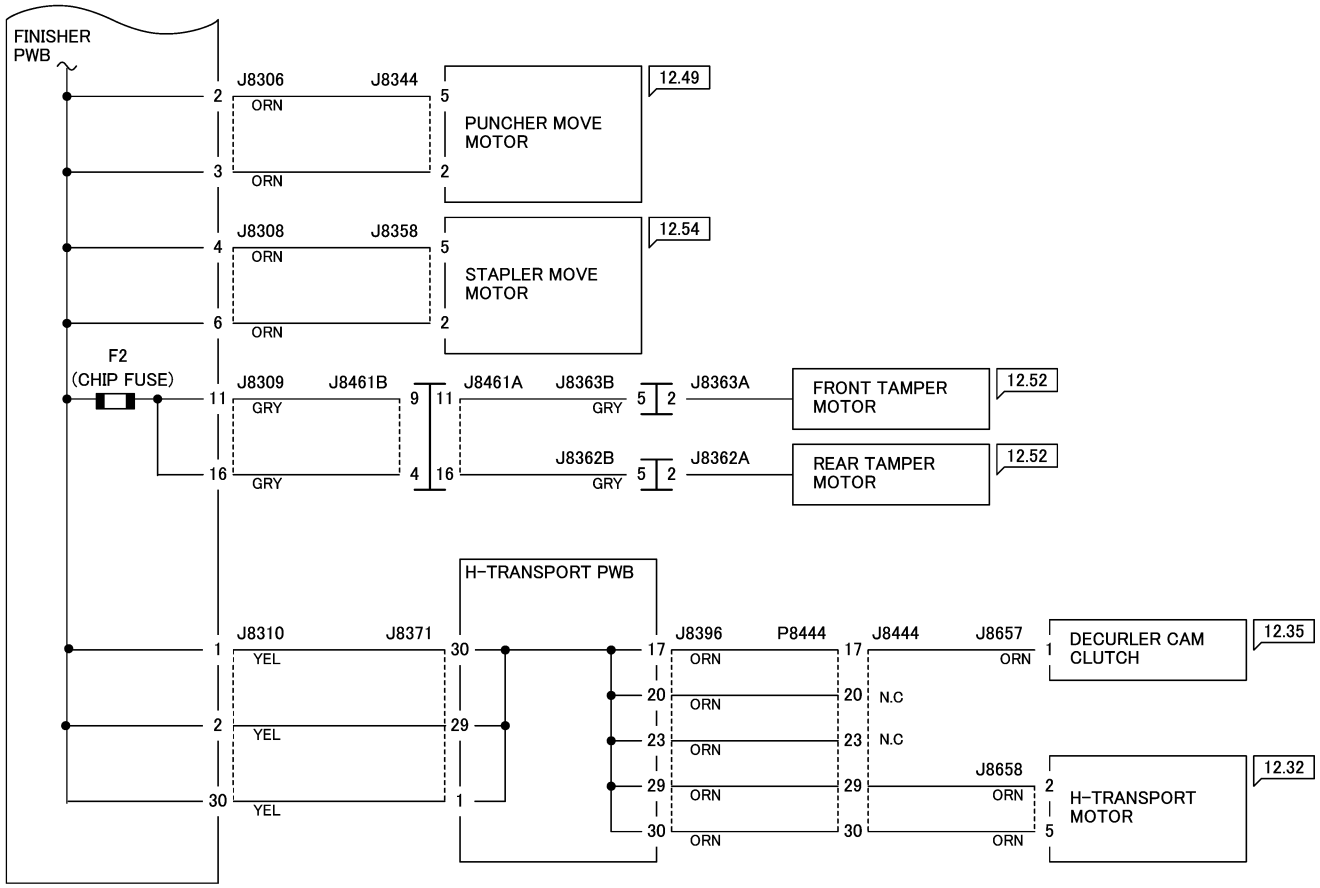

72041_NOR.VSD

12/08/11

Figure 2 A/P Finisher +24VDC Wirenet (2 of 3)

A/P FINISHER +24VDC DISTRIBUTION (3 0F 3)

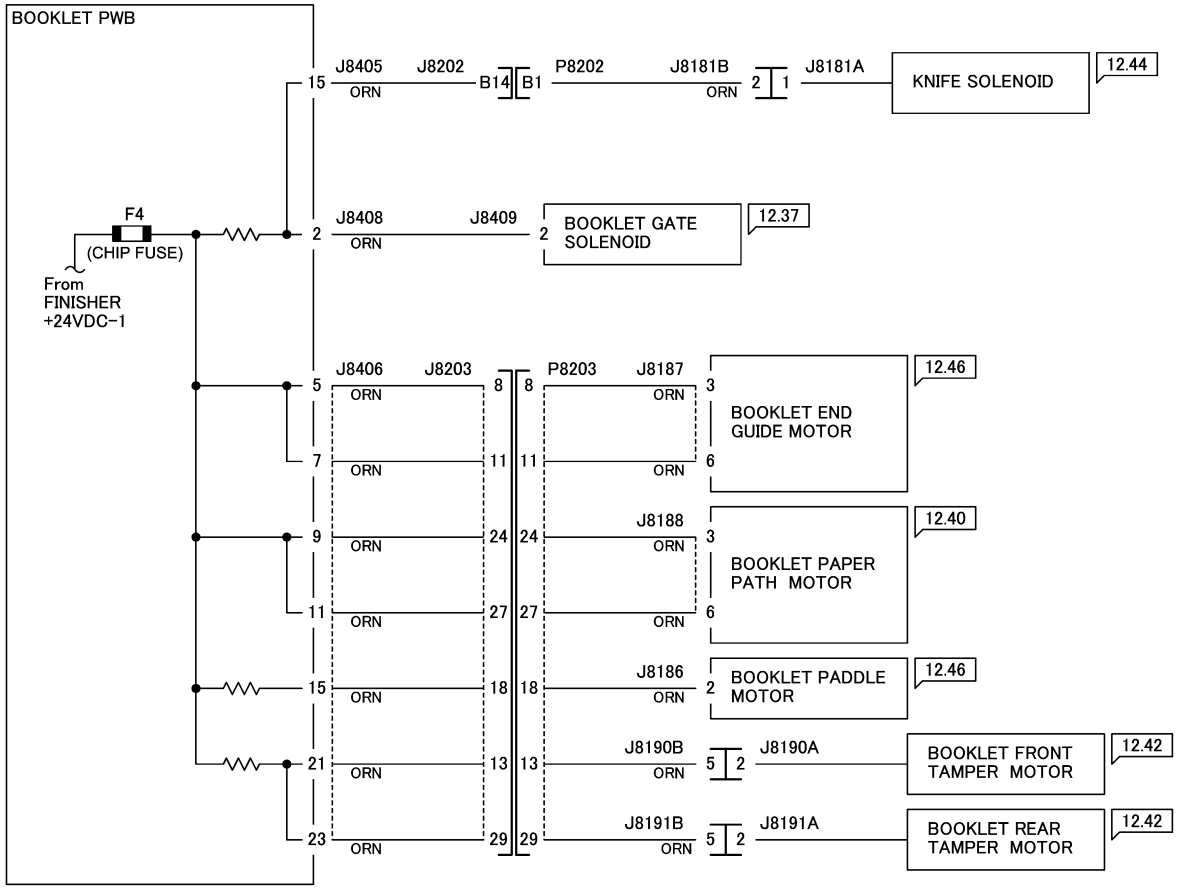

12/08/11

72042_NOR.VSD

Figure 3 A/P Finisher +24VDC Wirenet (3 of 3)

SHER +5VDC DISTRIBUTION (1 OF 3)

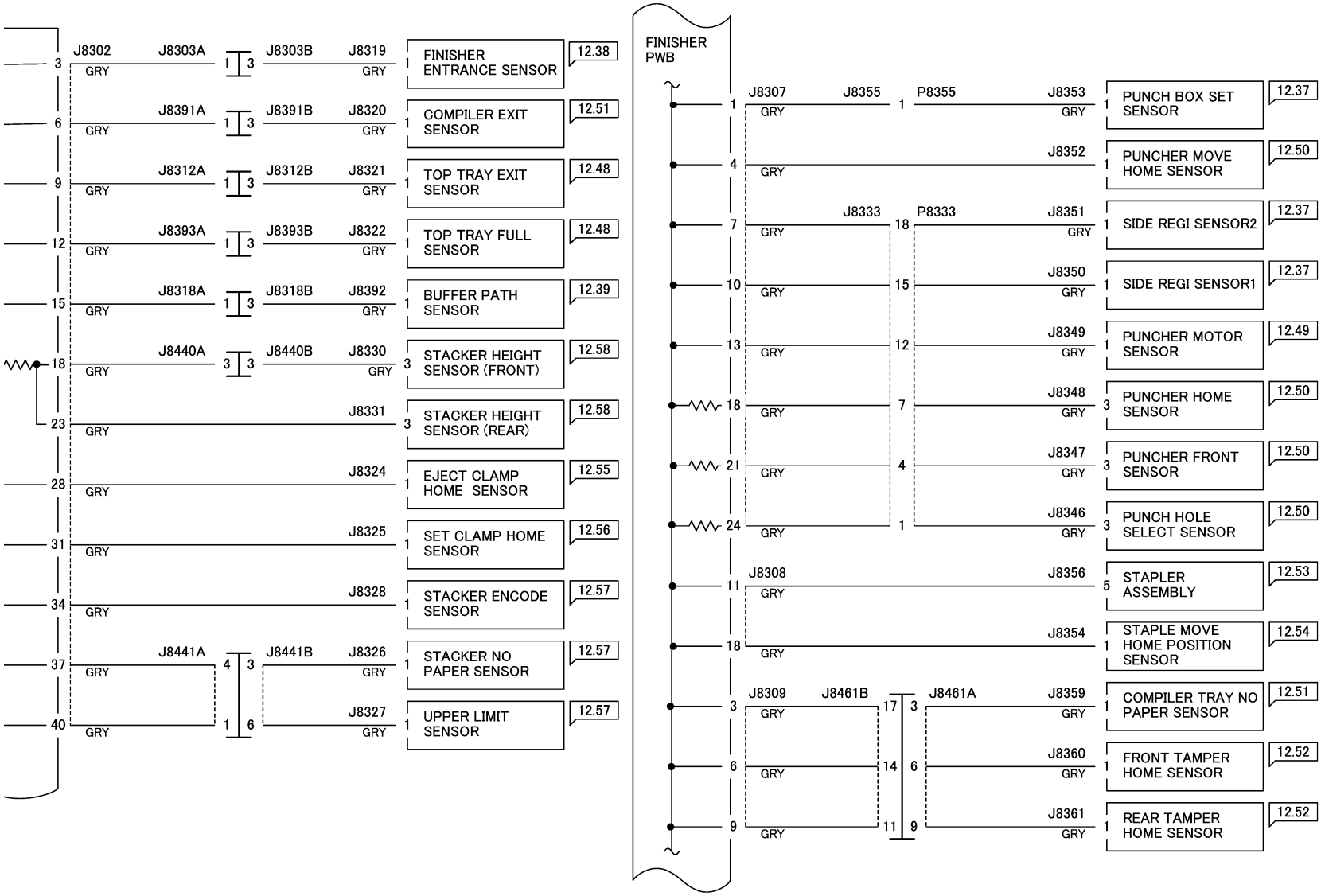

Figure 4 A/P Finisher +5VDC Wirenet (1 of 3)

A/P FINISHER +5VDC DISTRIBUTION (2 OF 3)

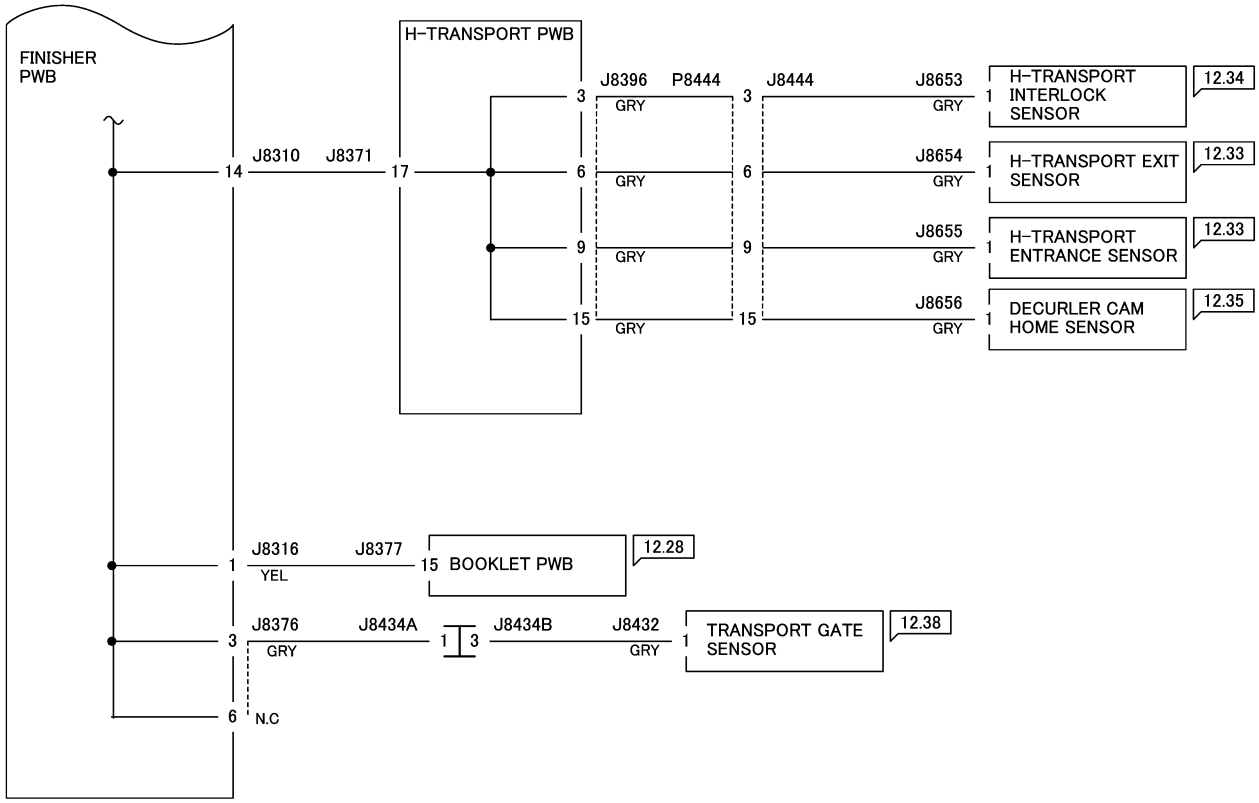

72044_NOR.VSD

12/08/11

Figure 5 A/P Finisher +5VDC Wirenet (2 of 3)

A/P FINISHER +5VDC DISTRIBUTION (3 OF 3)

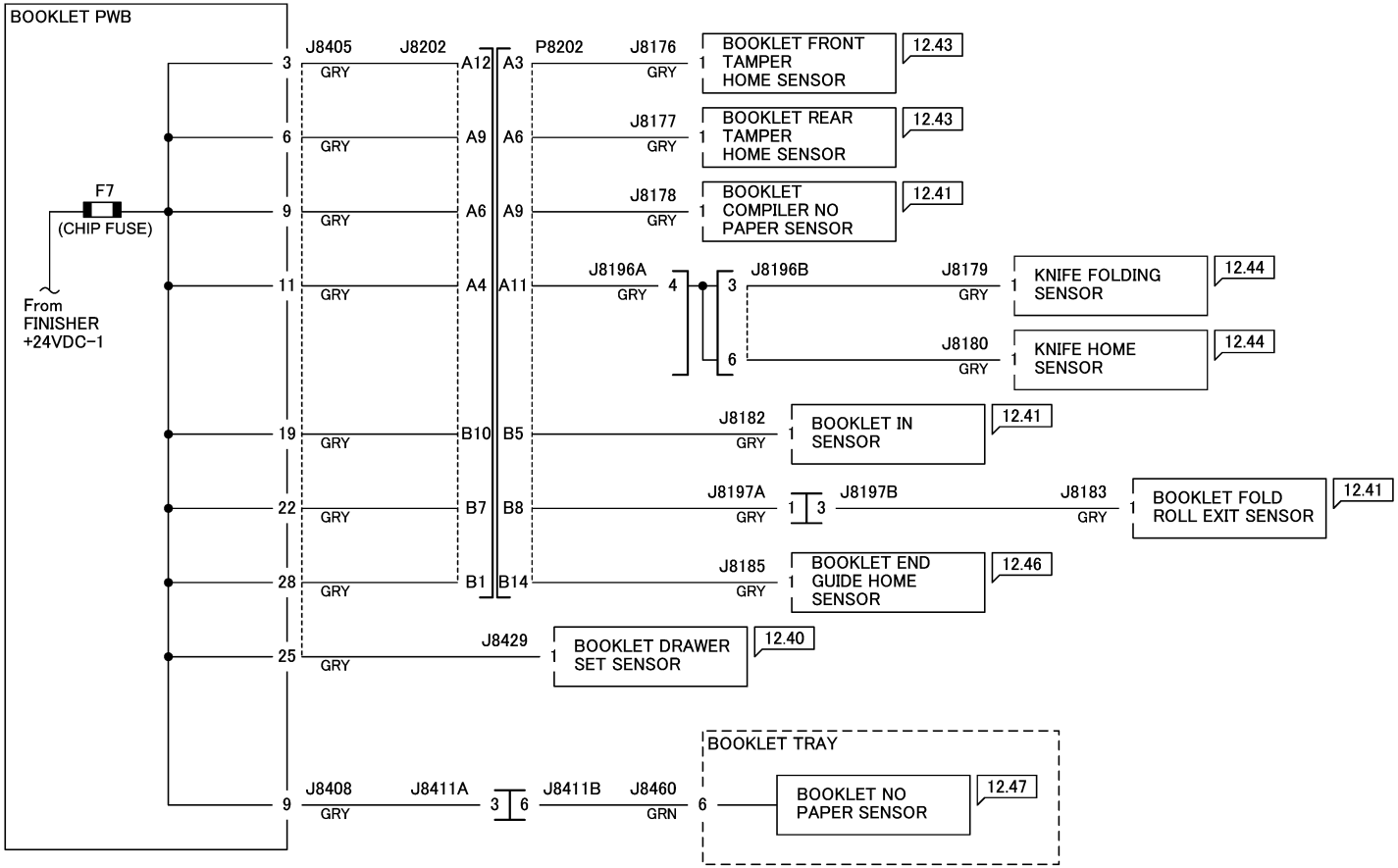

Figure 6 A/P Finisher +5VDC Wirenet (3 of 3 - Booklet Maker)

A/P FINISHER DC COM DISTRIBUTION (1 OF 4)

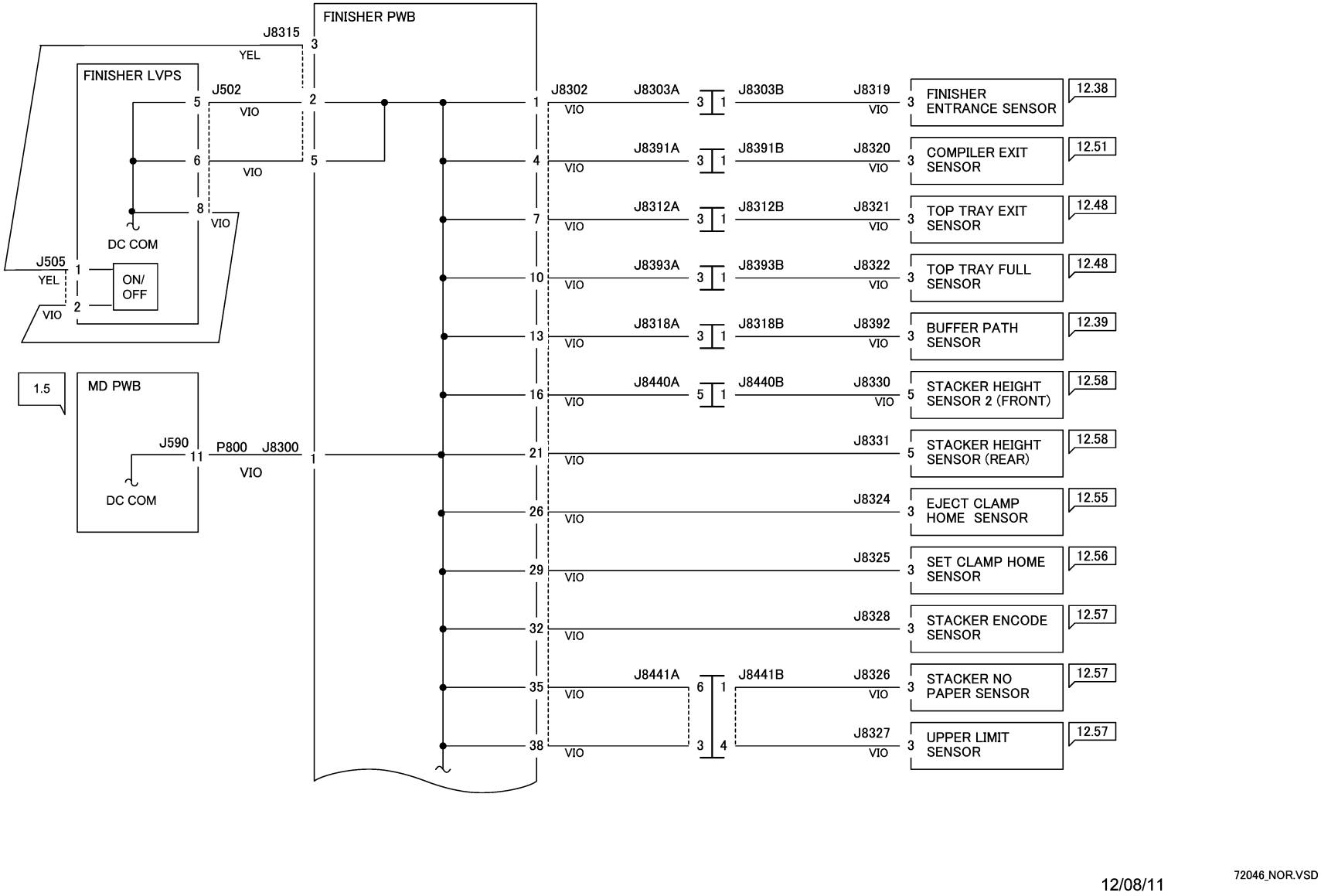

Figure 7 A/P Finisher DC COM Wirenet (1 of 4)

A/P FINISHER DC COM DISTRIBUTION (2 OF 4)

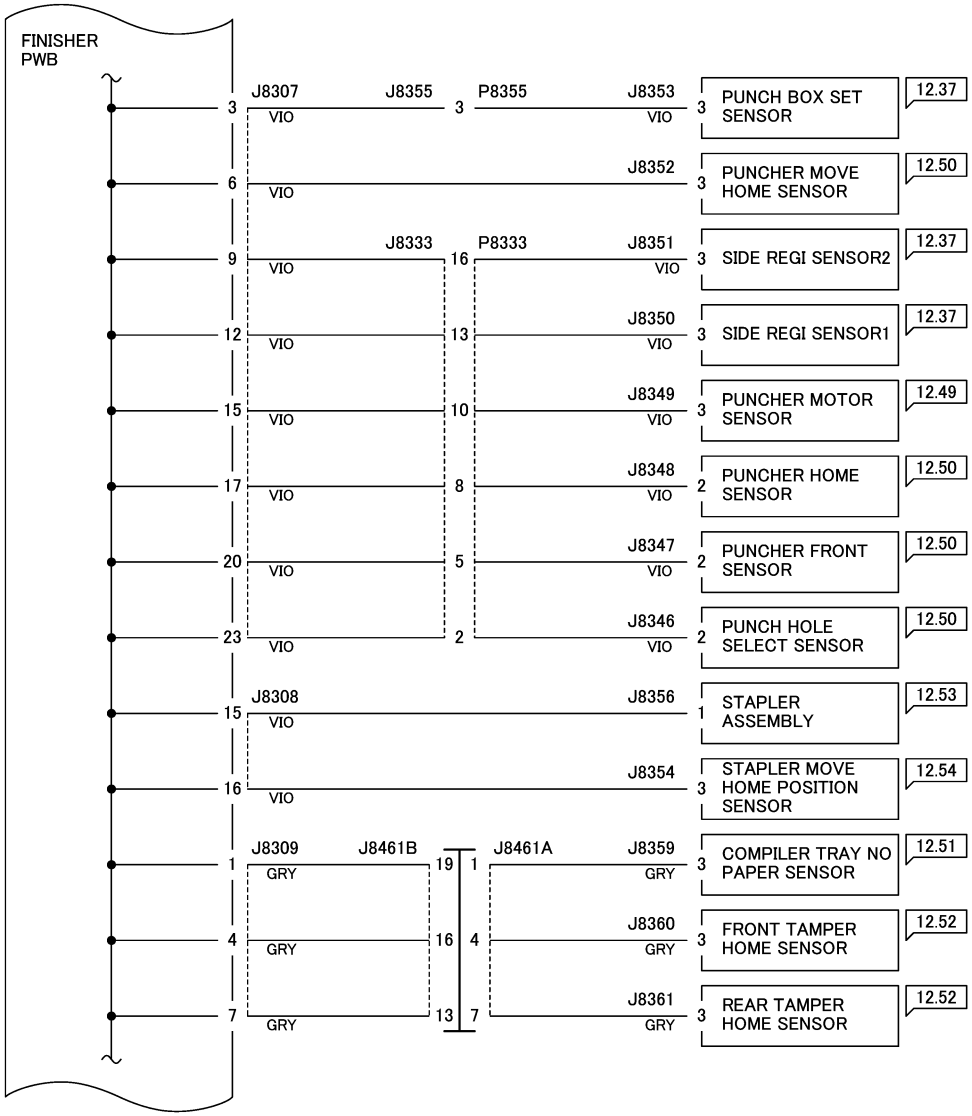

72047_NOR.VSD

12/08/11

Figure 8 A/P Finisher DC COM Wirenet (2 of 4)

A/P FINISHER DC COM DISTRIBUTION (3 OF 4)

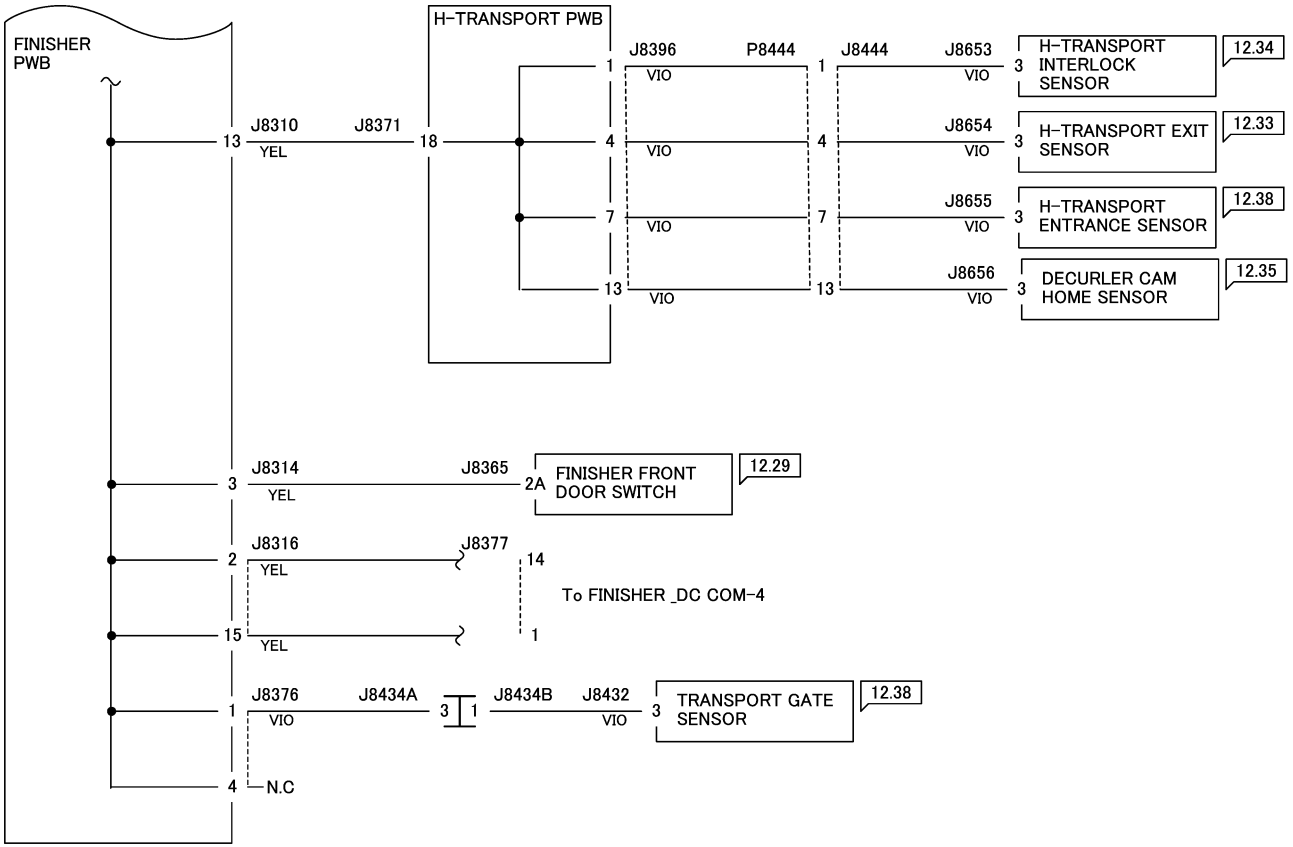

12/08/11

72048_NOR.VSD

Figure 9 A/P Finisher DC COM Wirenet (3 of 4)

A/P FINISHER DC COM DISTRIBUTION (1 OF 4) – BOOKLET MAKER

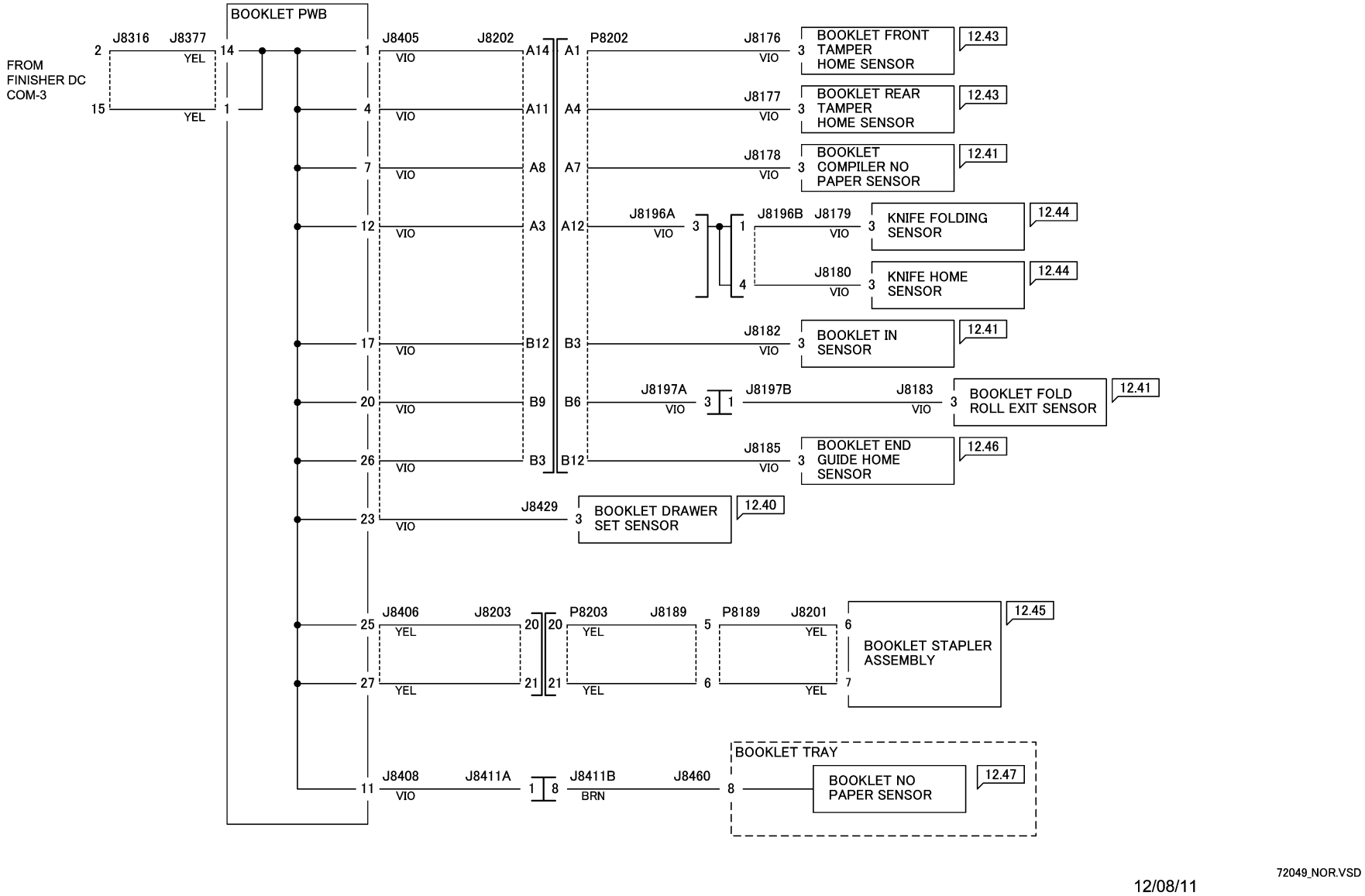

Figure 10 A/P Finisher DC COM Wirenet (4 of 4 - Booklet Maker)

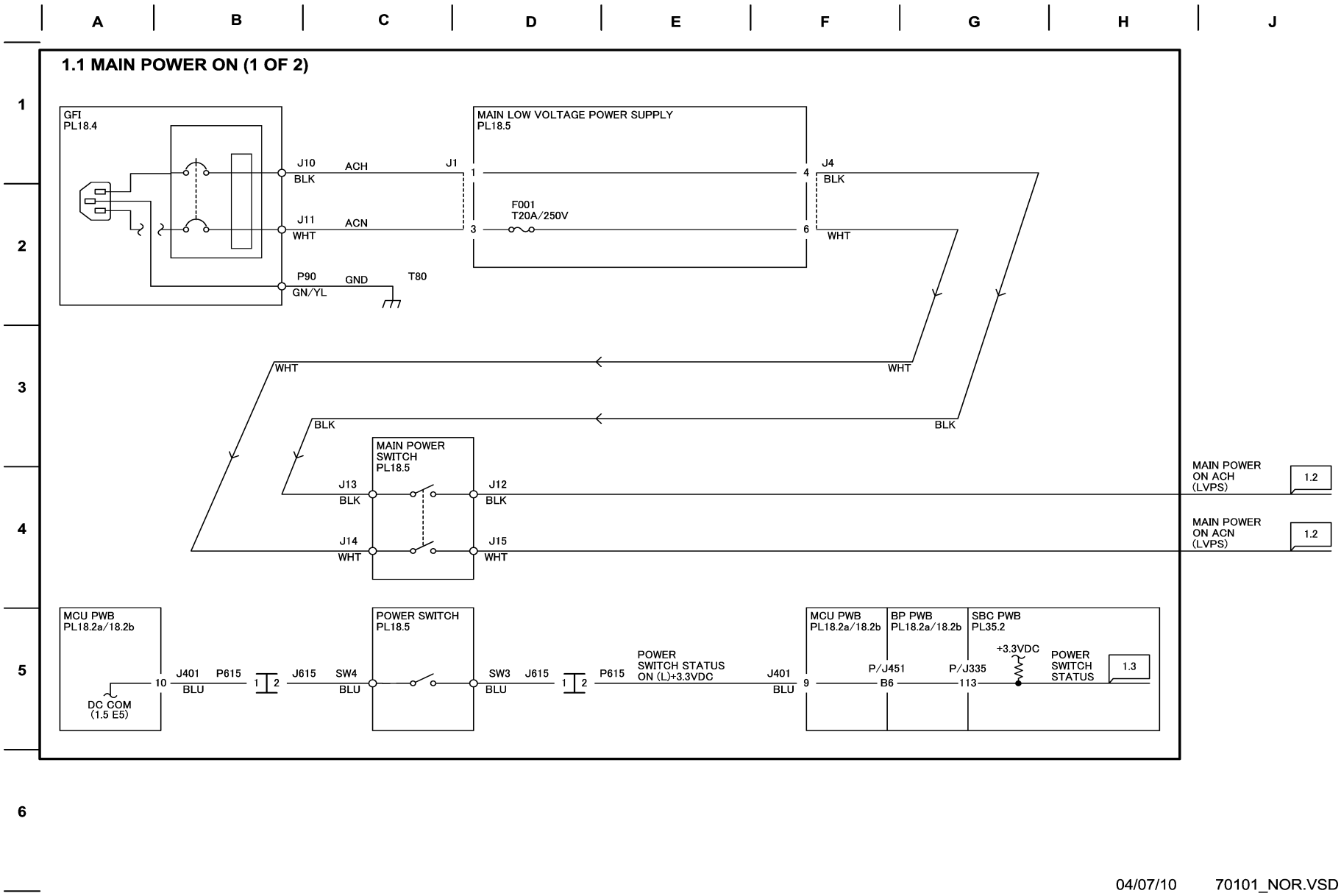

Figure 1 BSD 1.1 Main Power On (1 of 2)

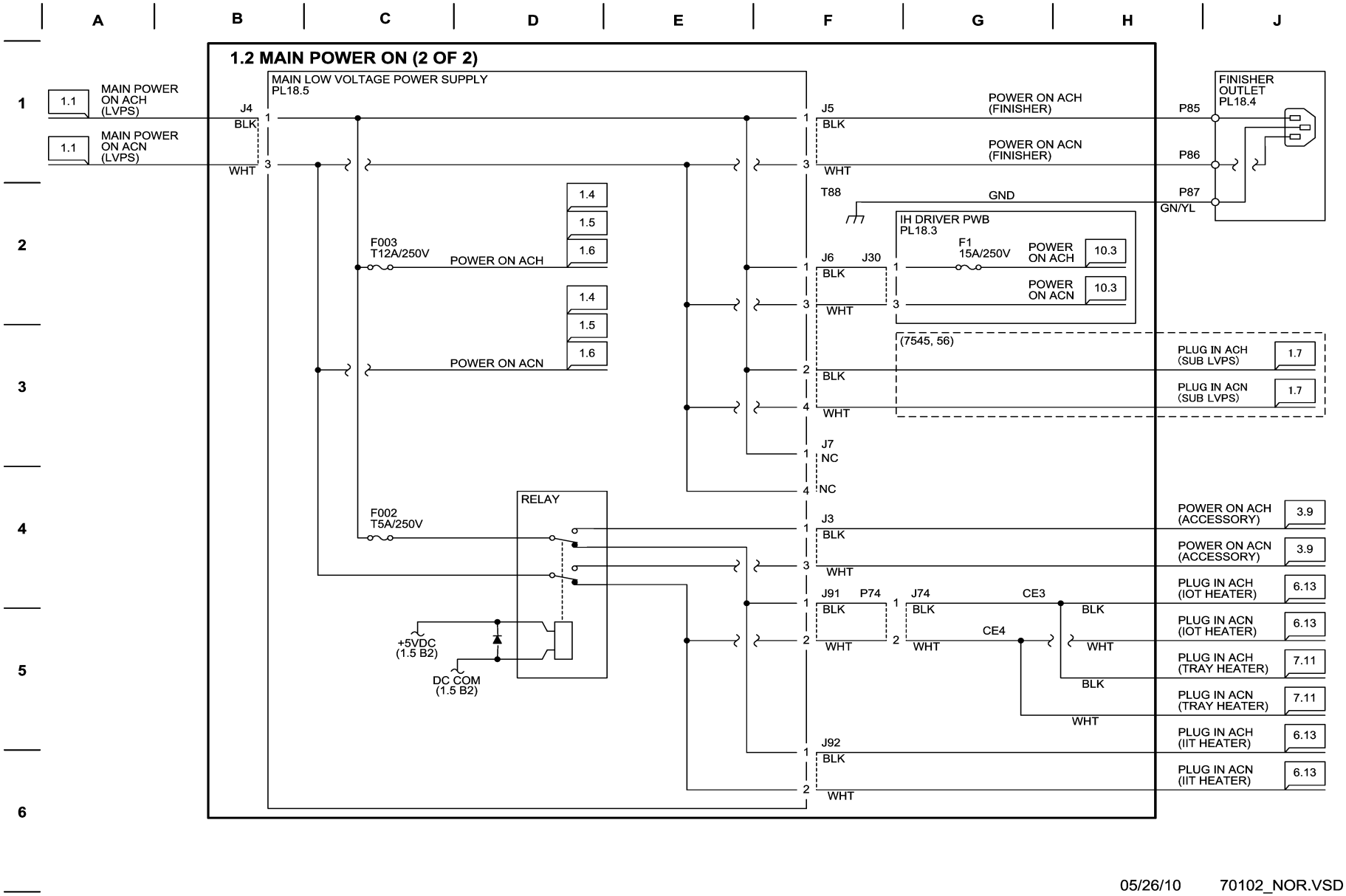

Figure 2 BSD 1.2 Main Power On (2 of 2)

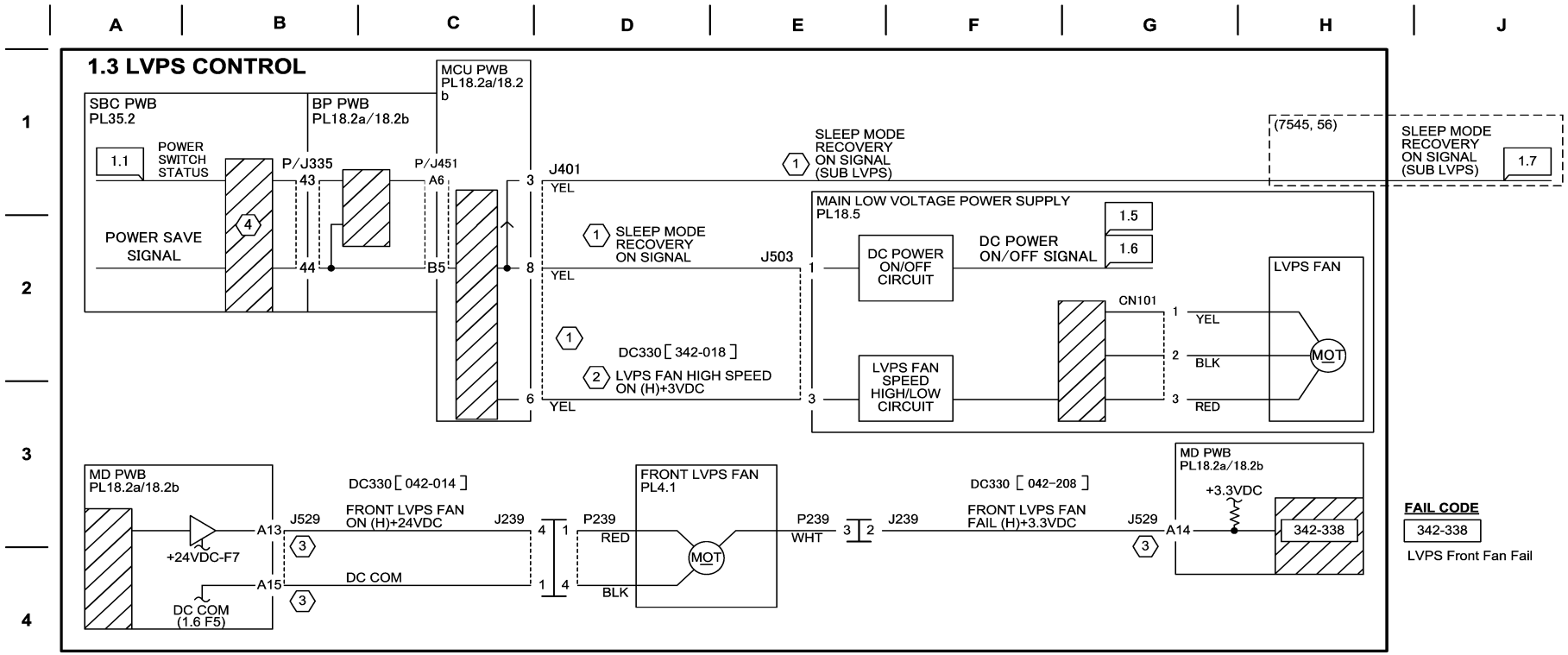

NOTE:

(1) The table below shows the relation between Sleep Mode Recovery ON Signal/LVSP Fan Signal and Main LVPS Output, in each power mode.

	Warm Up /Run	Standby /Low Power	Semi Low Power /Sleep
Sleep Mode Recovery ON Signal	High	High	Low
LVPS Fan Operation	High		Low
Fan Operation	Rotates at high speed	Rotates at low speed	Stops
STBY+5VDC Output	○	○	○
+5VDC Output	○	○	×
+24VDC Output	○	○	×

○ : Power supplied
× : Power cut off

(2) Turning ON DC330[042-018] makes the Fan rotate at high speed. Turning it OFF makes it rotate at low speed. In this diag, after rotating at low speed, the Fan does not stop until power OFF.

(3) Wire Color varies depending on the model.
(7525, 30, 35): BLU
(7545, 56): WHT

70103_NOR.VSD

Figure 3 BSD 1.3 LVPS Control

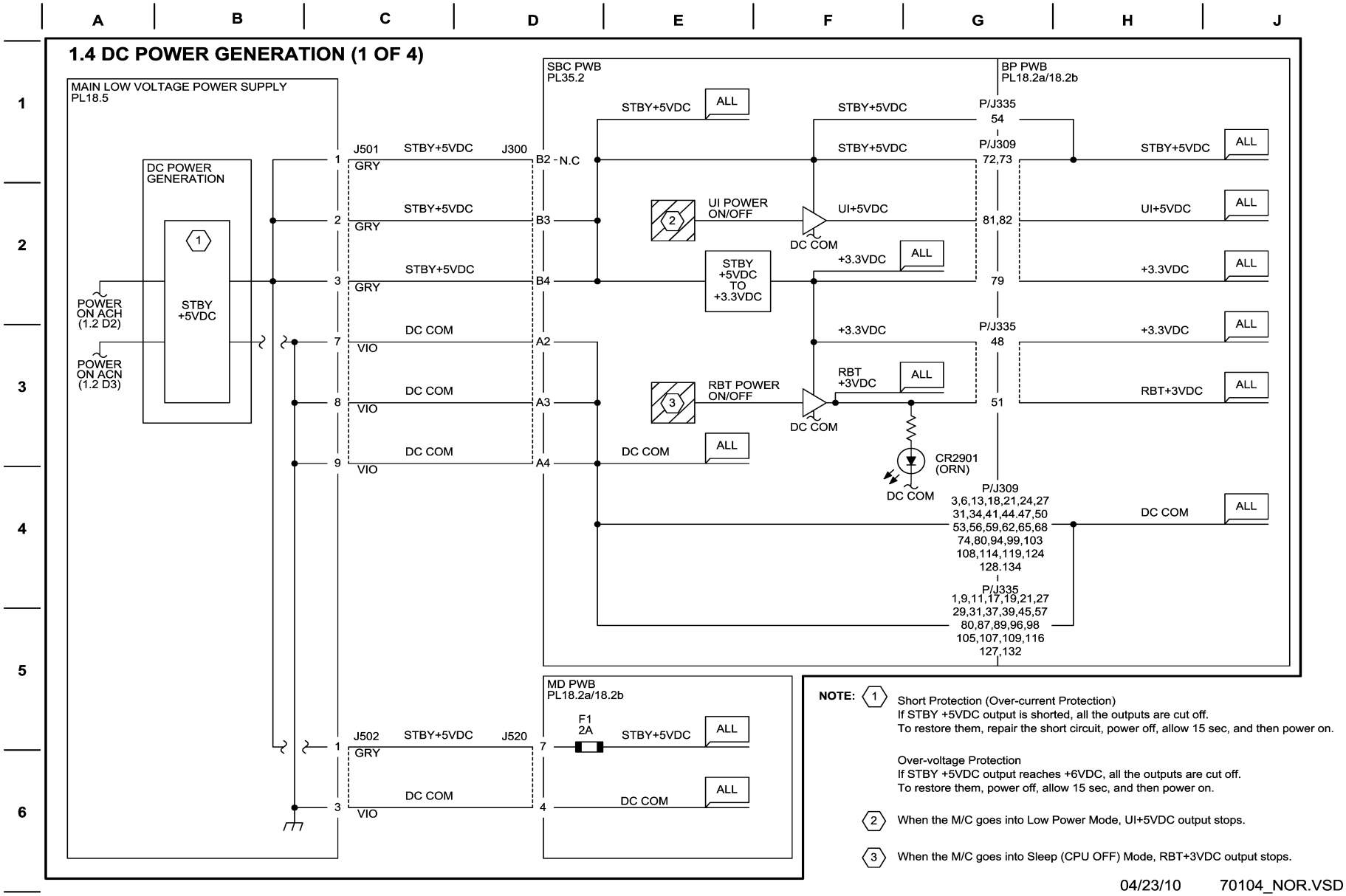

Figure 4 BSD 1.4 DC Power Generation (1 of 4)

BSD 1.5 DC Power Generation (2 of 4)

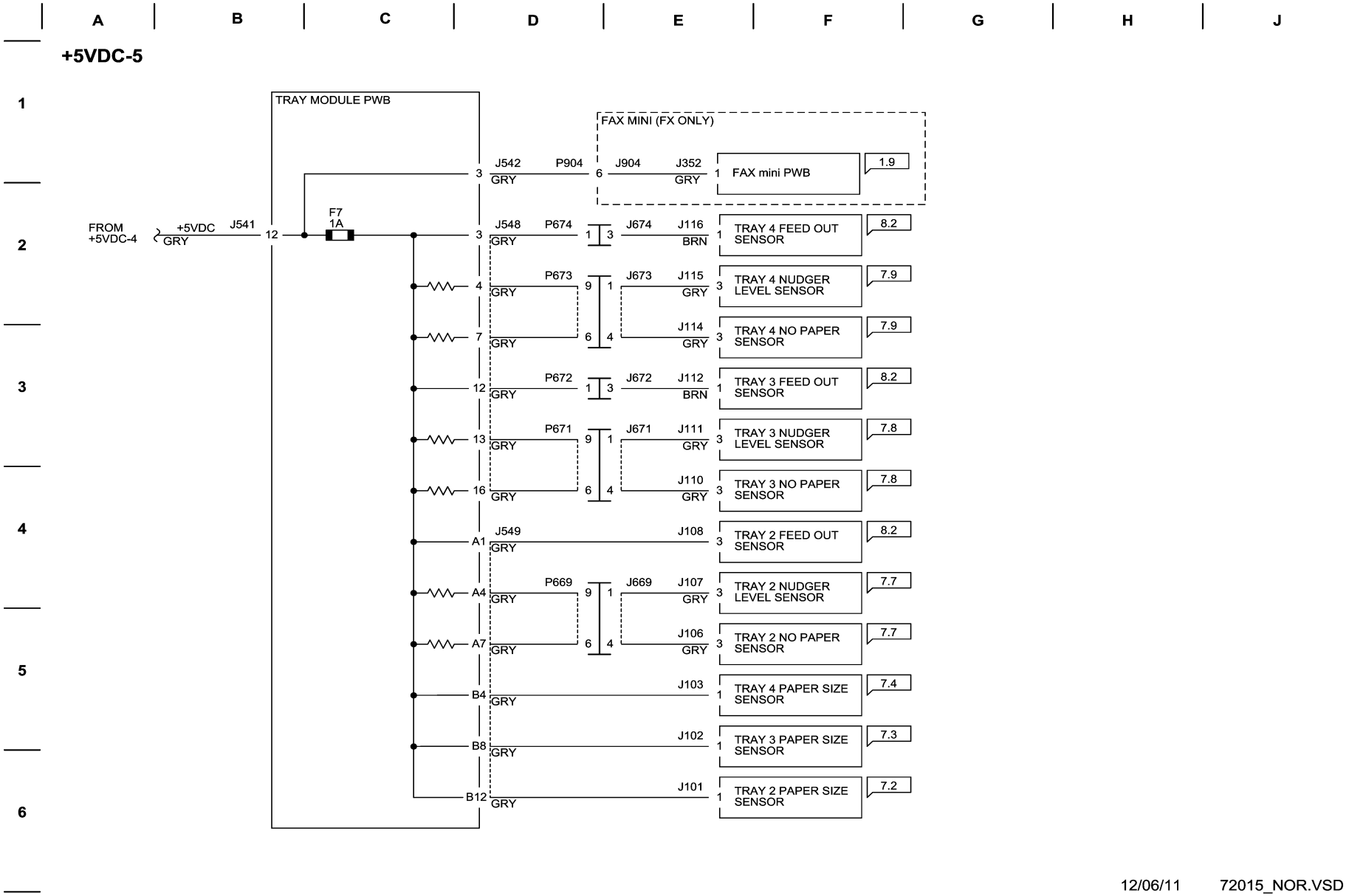

Figure 5 BSD 1.5 DC Power Generation (2 of 4)

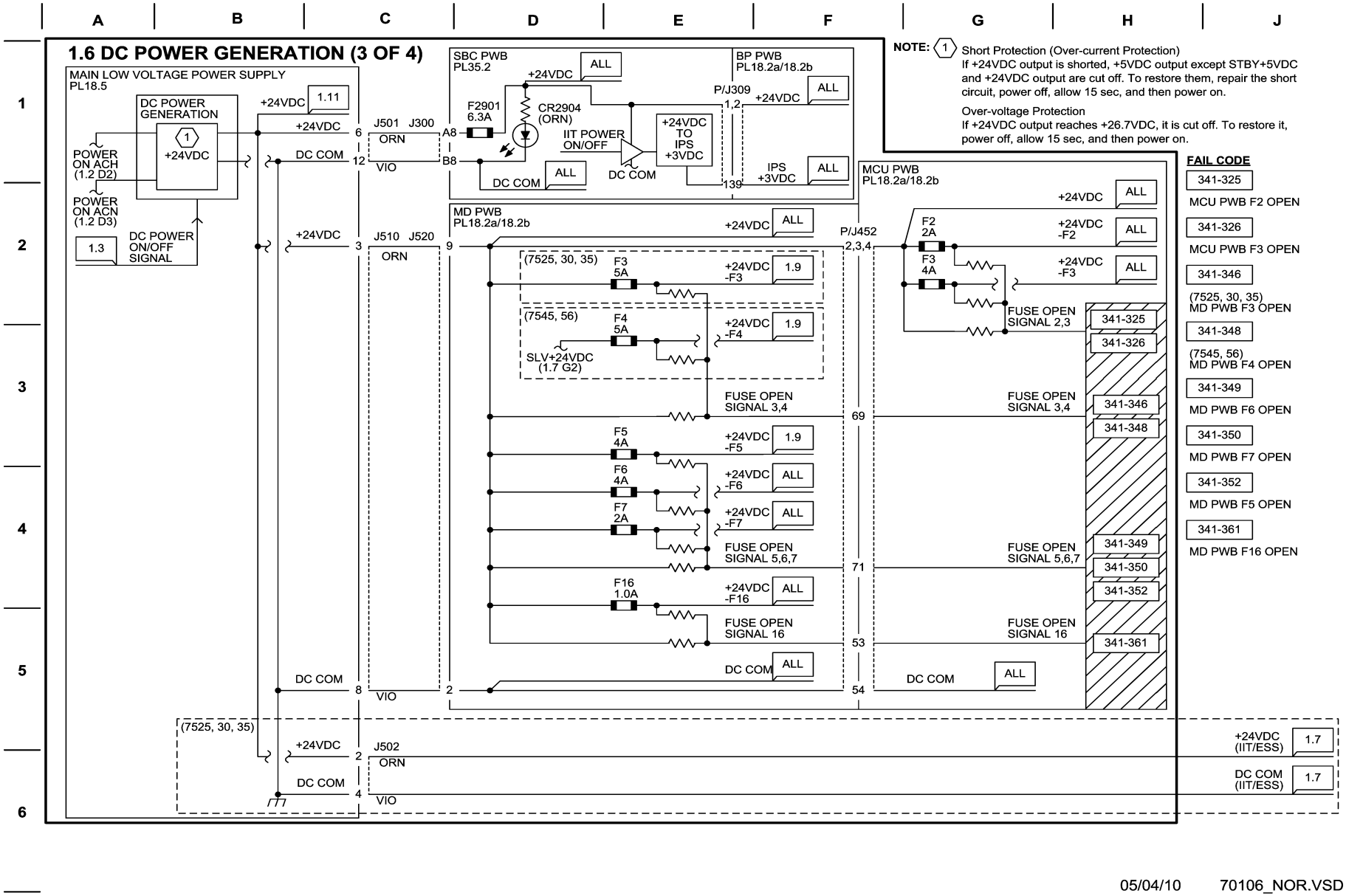

Figure 6 BSD 1.6 DC Power Generation (3 of 4)

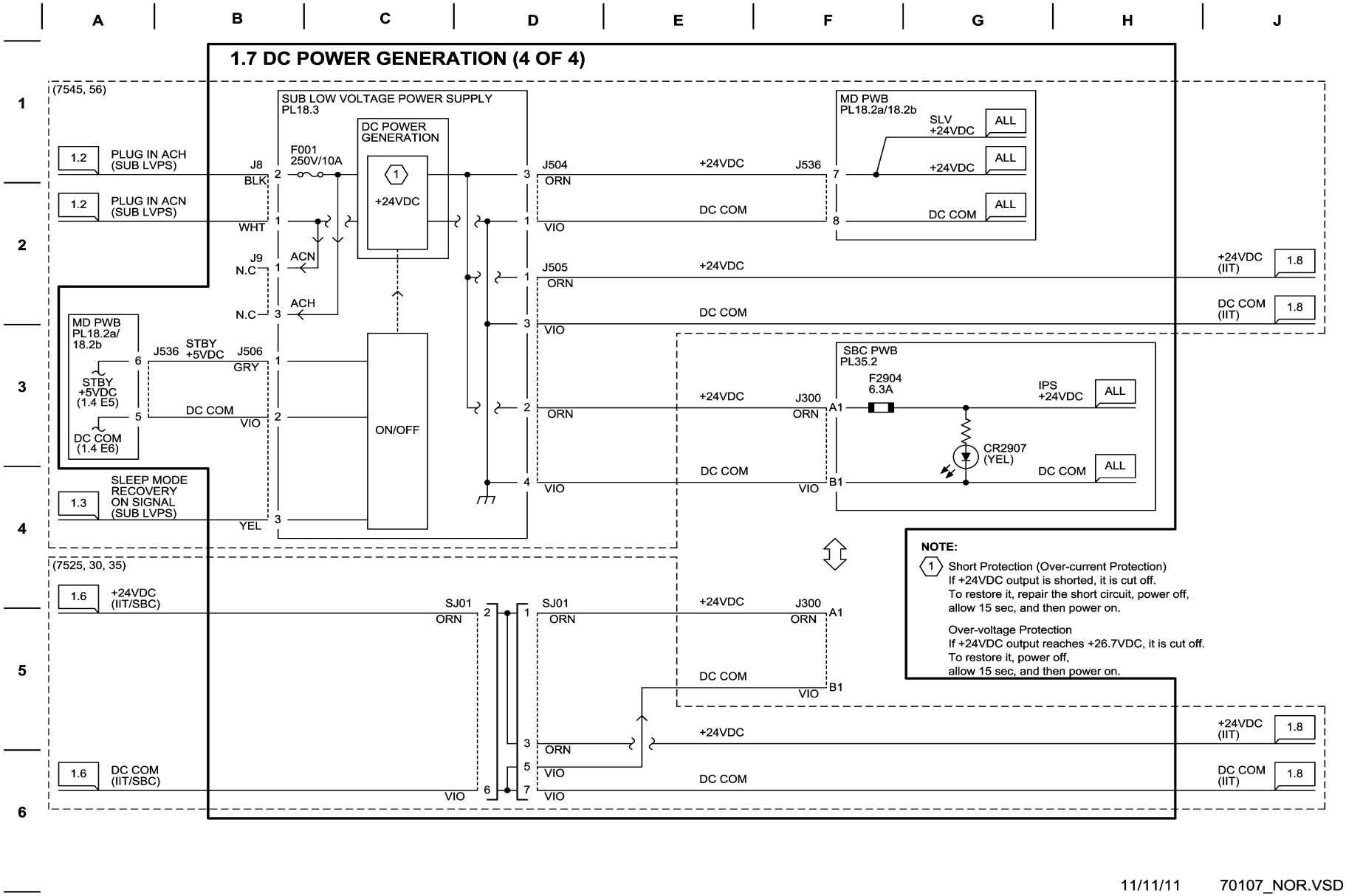

Figure 7 BSD 1.7 DC Power Generation (4 of 4)

BSD 1.8 IIT DC Power Distribution

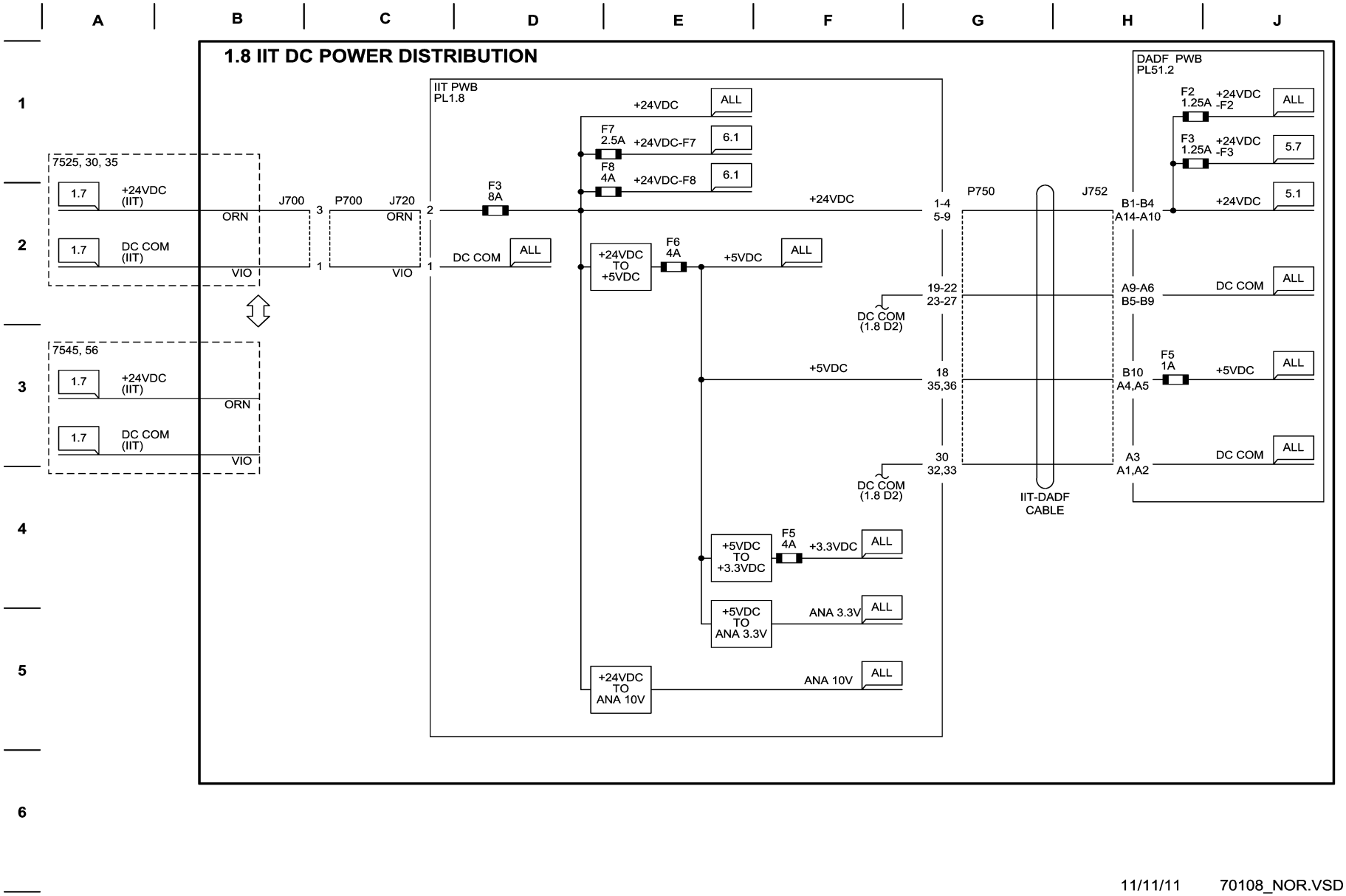

Figure 8 BSD 1.8 IIT DC Power Distribution

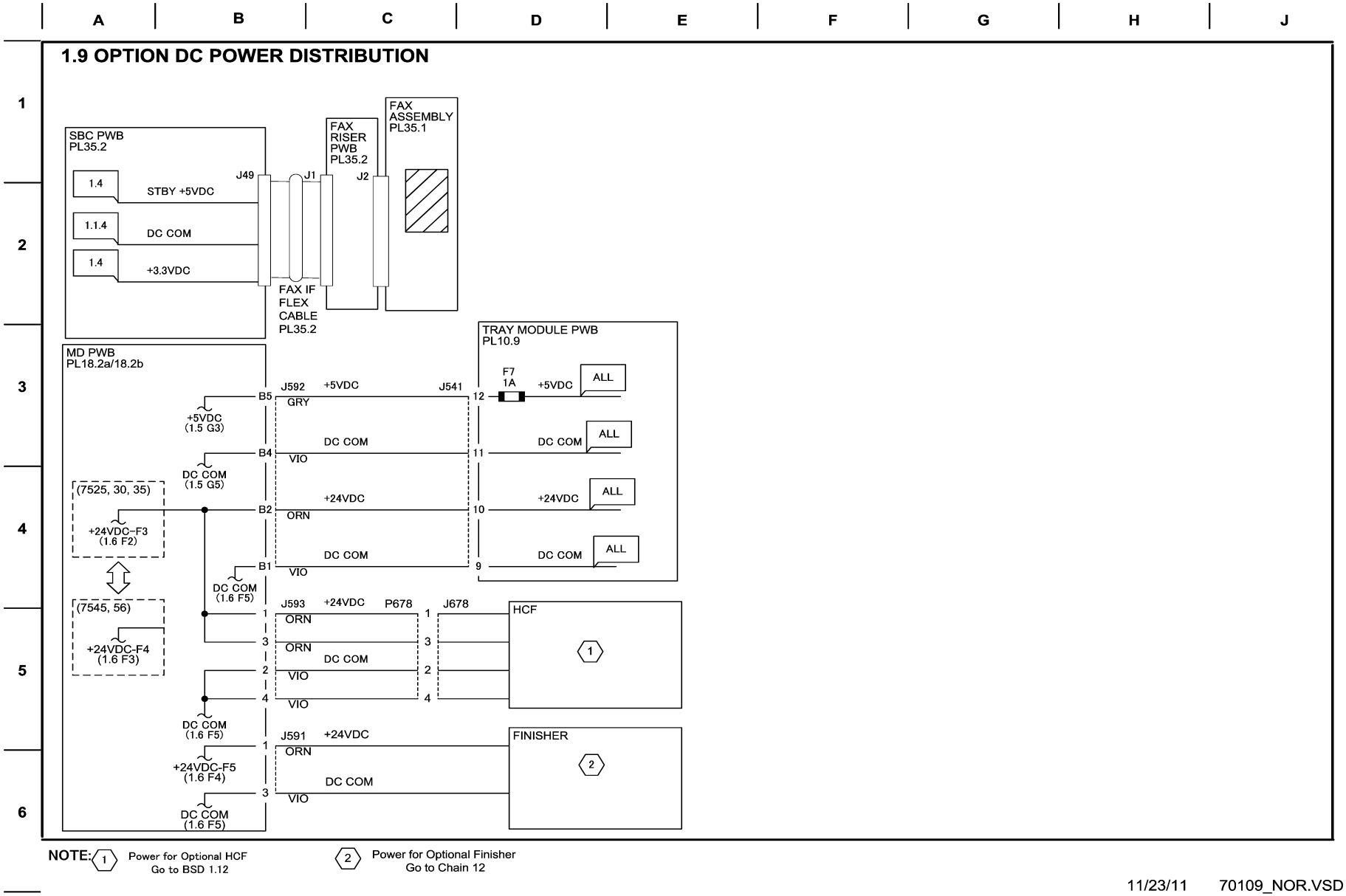

Figure 9 BSD 1.9 Option DC Power Distribution

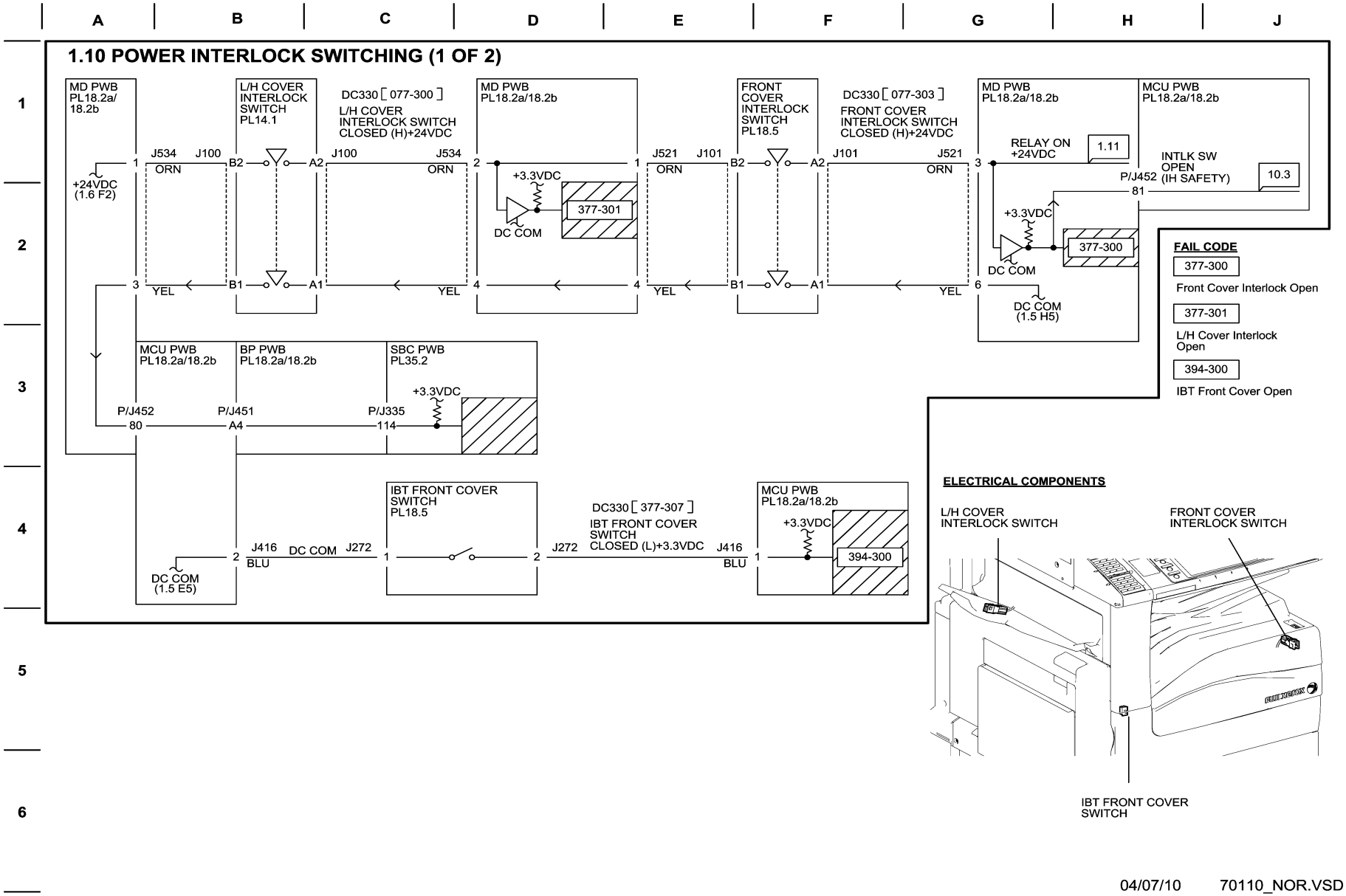

Figure 10 BSD 1.10 Power Interlock Switching (1 of 2)

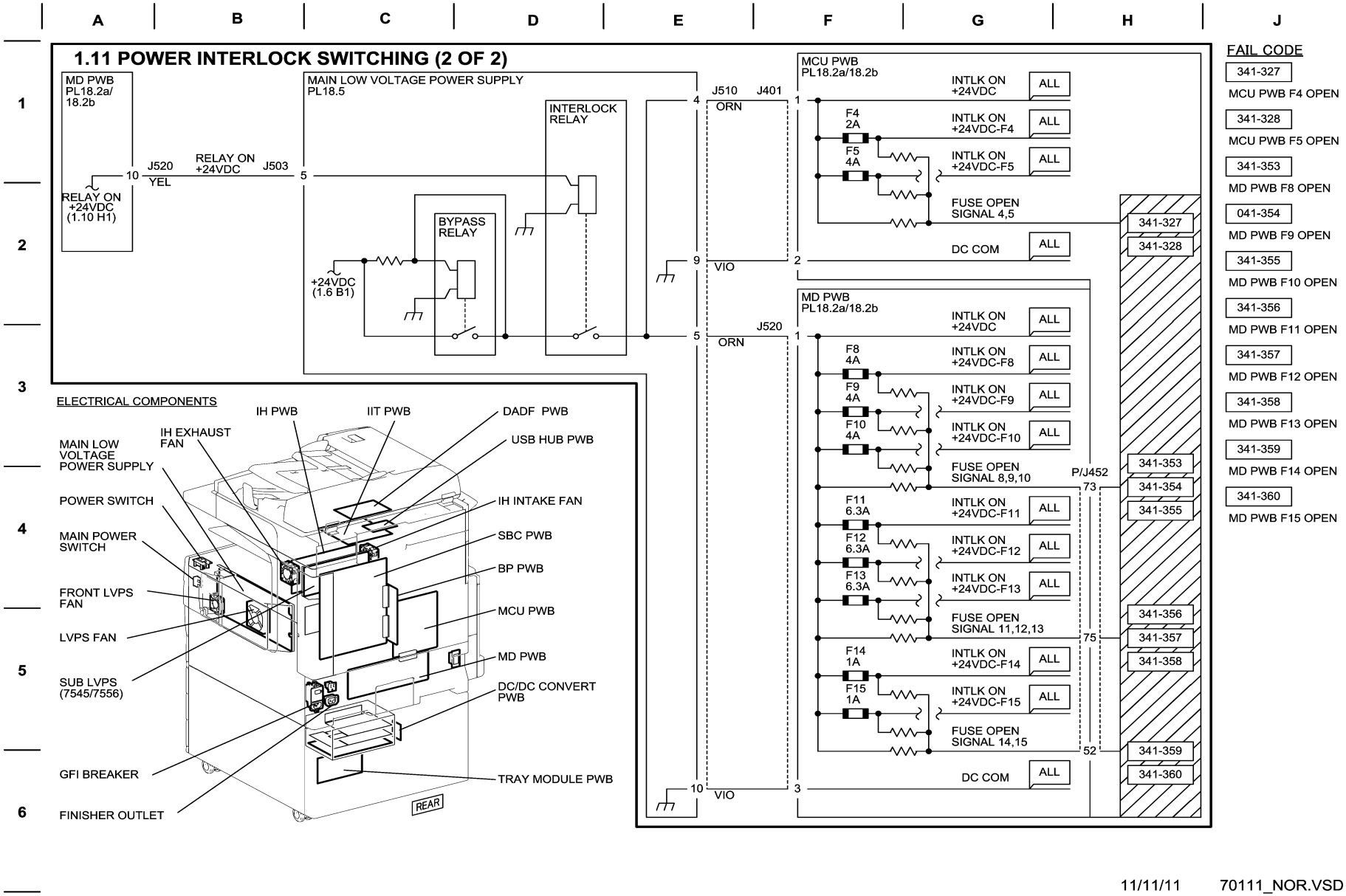

Figure 11 BSD 1.11 Power Interlock Switching (2 of 2)

BSD 1.12 DC Power Distribution (HCF)

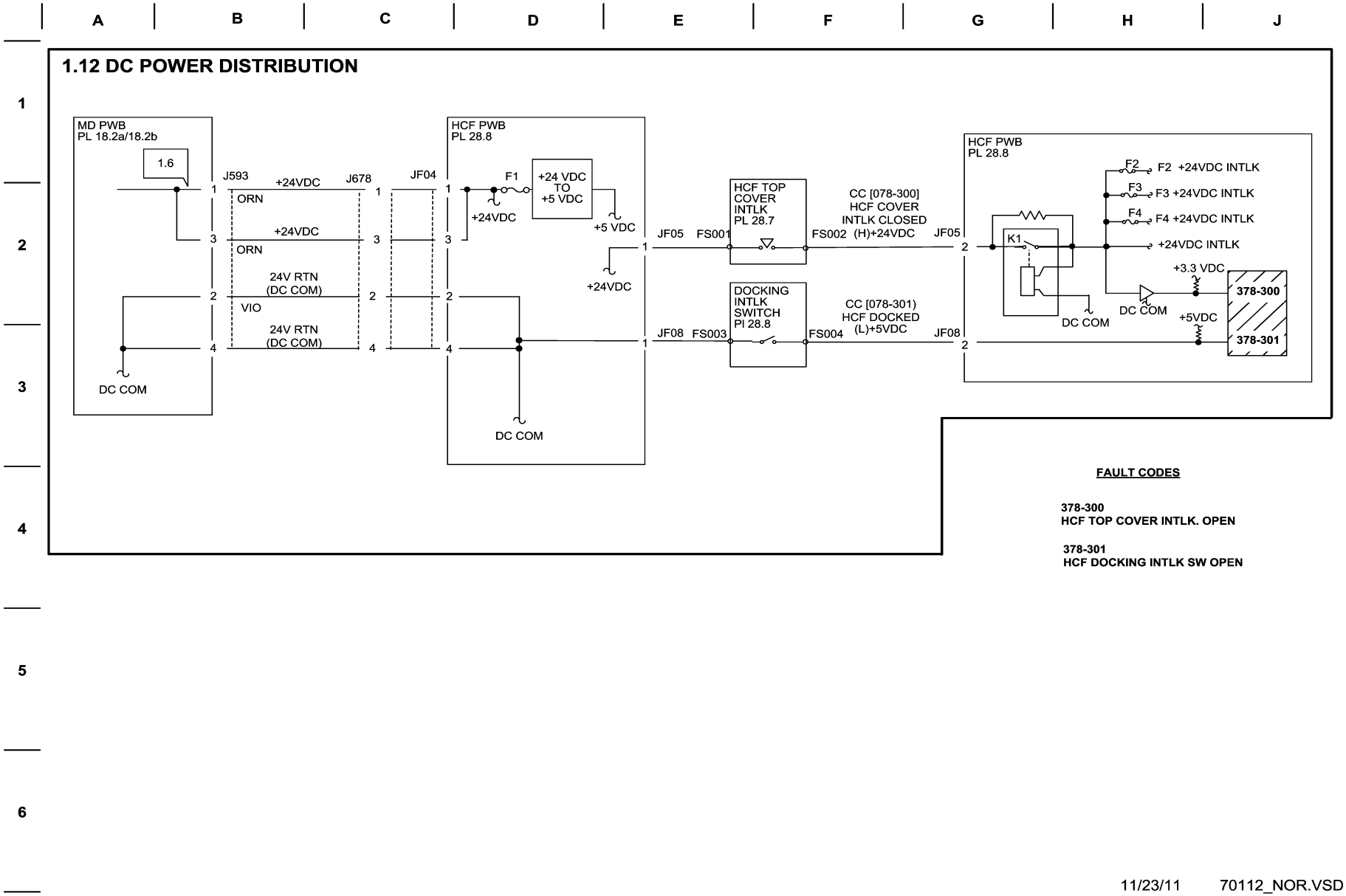

Figure 12 BSD 1.12 DC Power Distribution (HCF)

BSD 2.1 User Interface

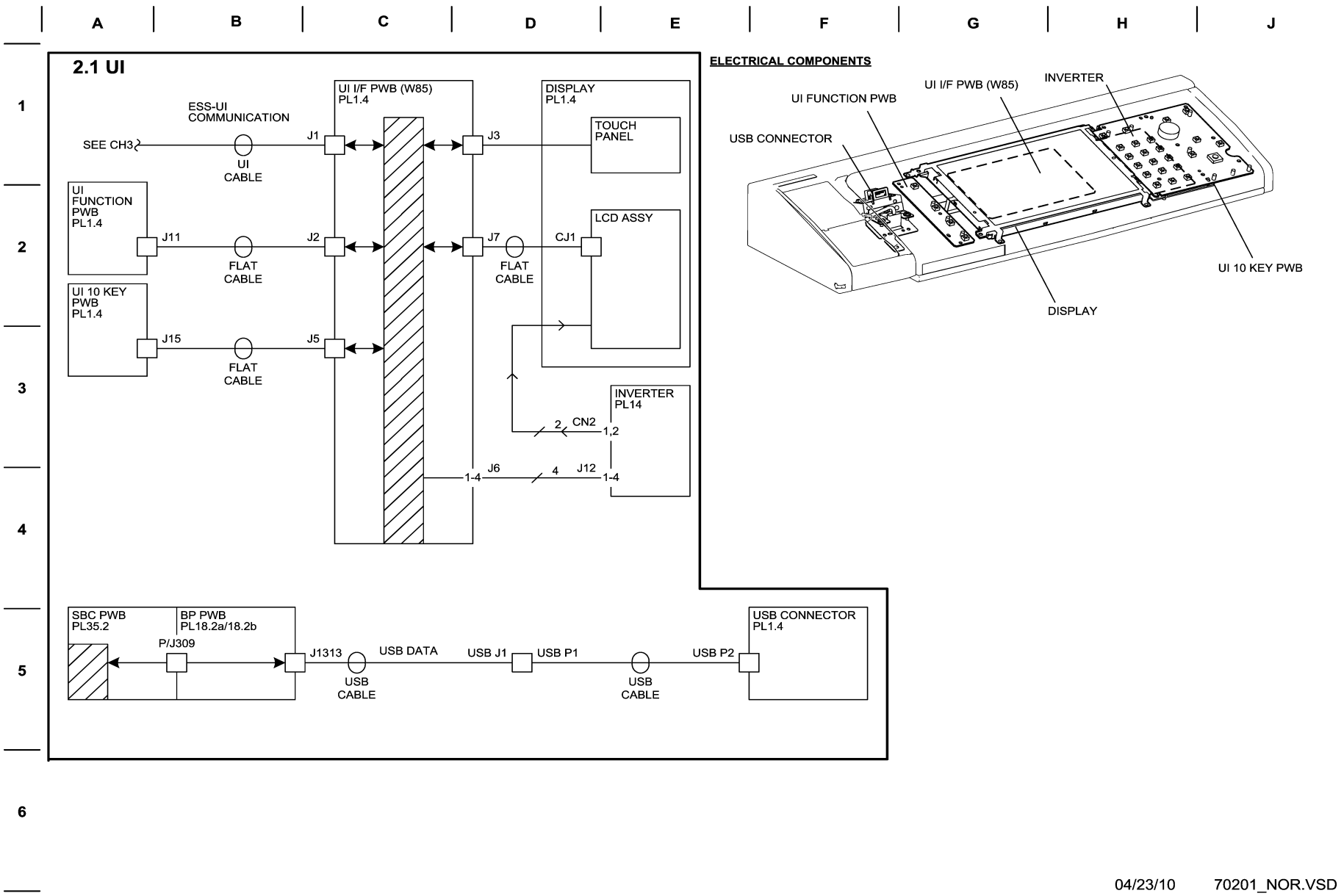

Figure 1 BSD 2.1 User Interface

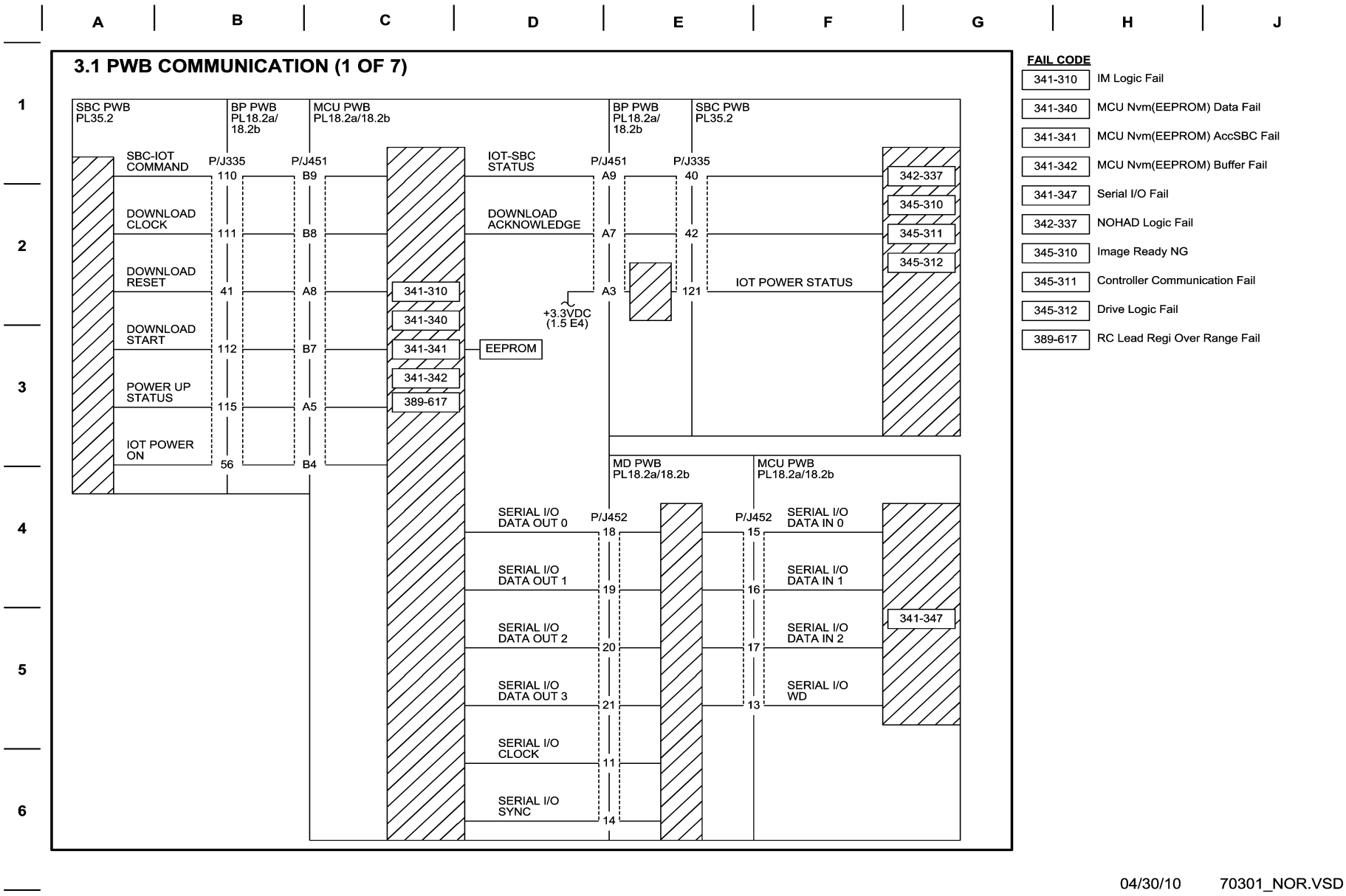

Figure 1 BSD 3.1 PWB Communication (1 of 7)

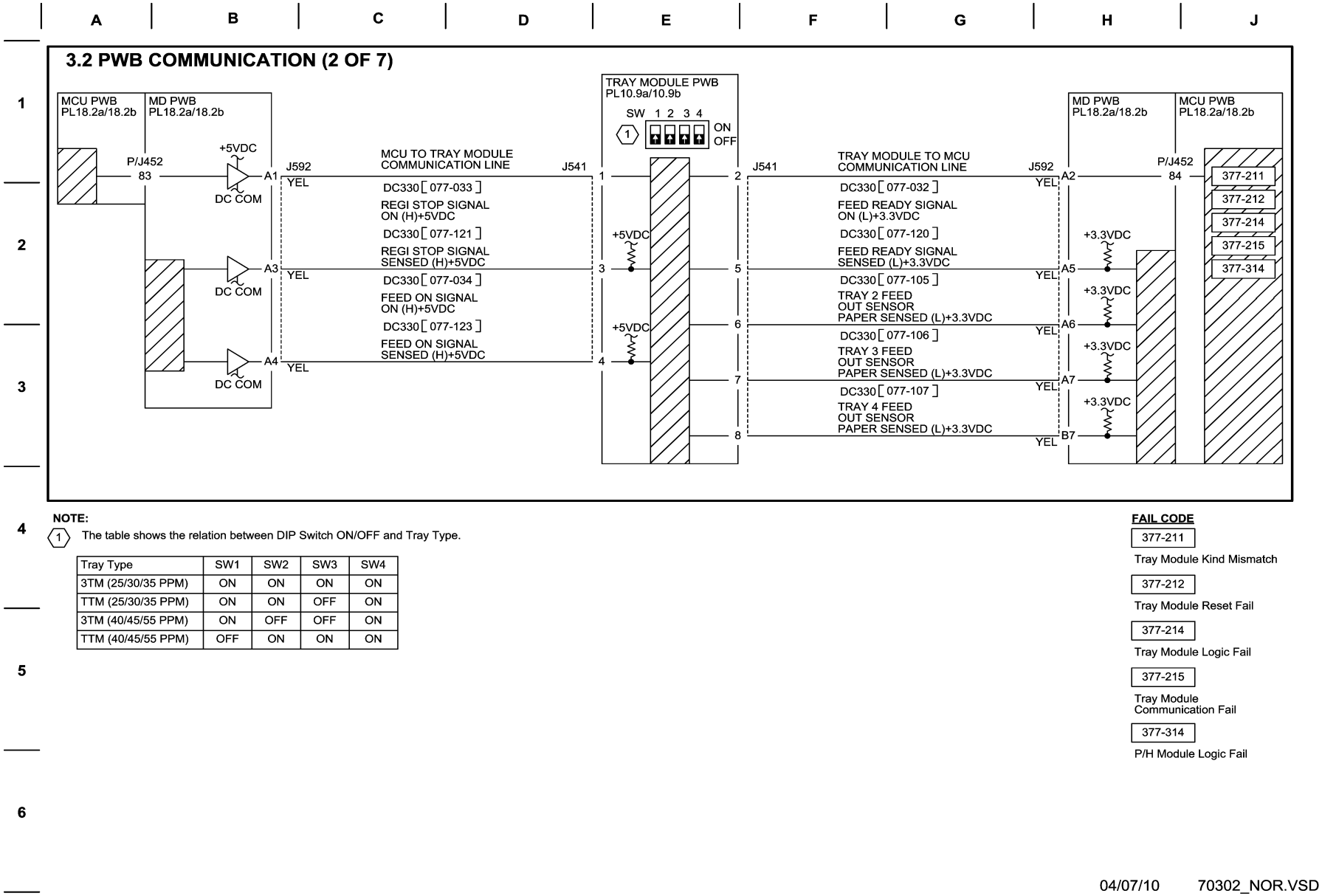

NOTE:

(1) The table shows the relation between DIP Switch ON/OFF and Tray Type.

Tray Type	SW1	SW2	SW3	SW4
3TM (25/30/35 PPM)	ON	ON	ON	ON
TTM (25/30/35 PPM)	ON	ON	OFF	ON
3TM (40/45/55 PPM)	ON	OFF	OFF	ON
TTM (40/45/55 PPM)	OFF	ON	ON	ON

FAIL CODE

377-211
Tray Module Kind Mismatch

377-212
Tray Module Reset Fail

377-214
Tray Module Logic Fail

377-215
Tray Module Communication Fail

377-314
P/H Module Logic Fail

04/07/10 70302_NOR.VSD

Figure 2 BSD 3.2 PWB Communication (2 of 7)

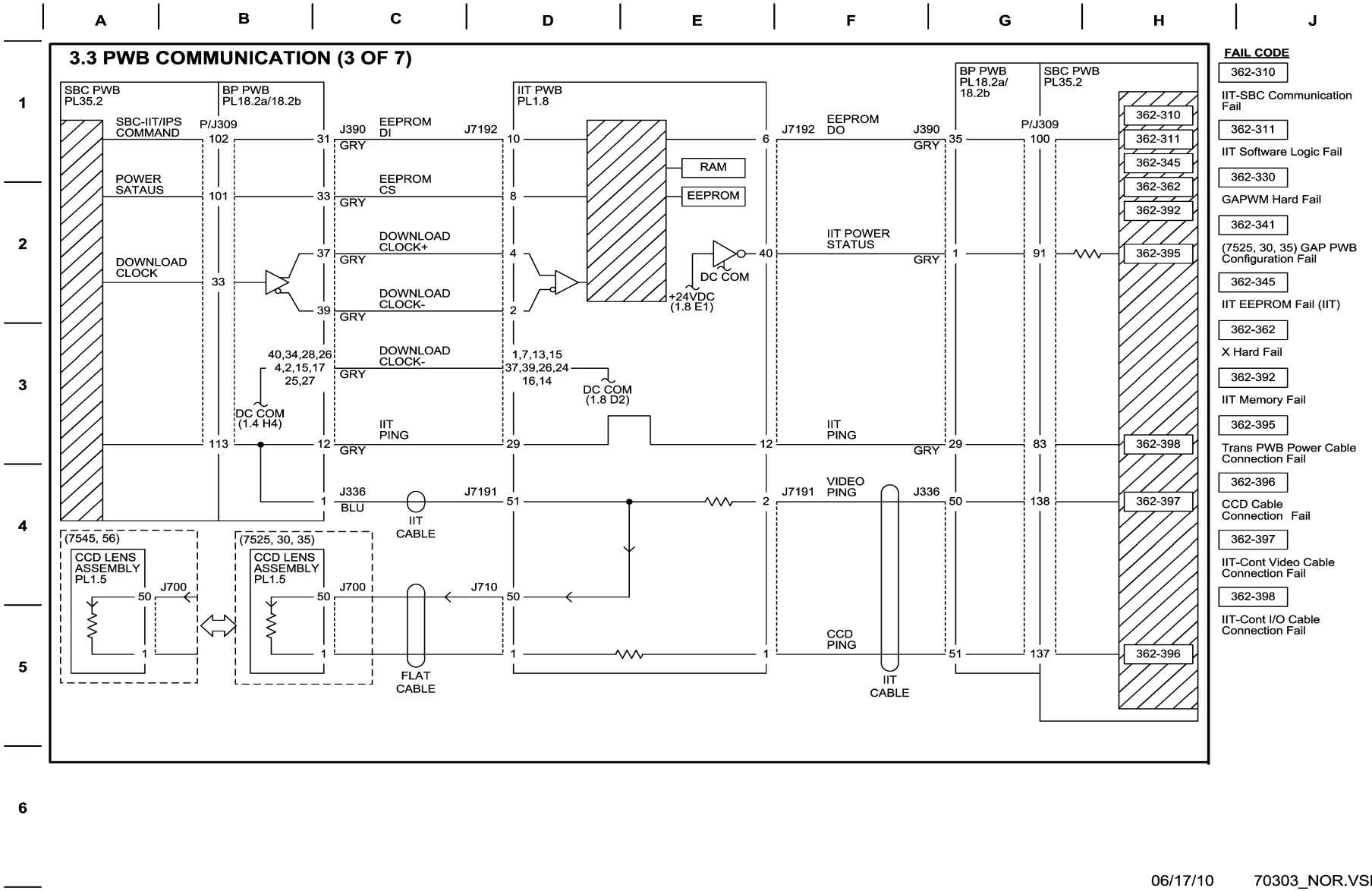

Figure 3 BSD 3.3 PWB Communication (3 of 7)

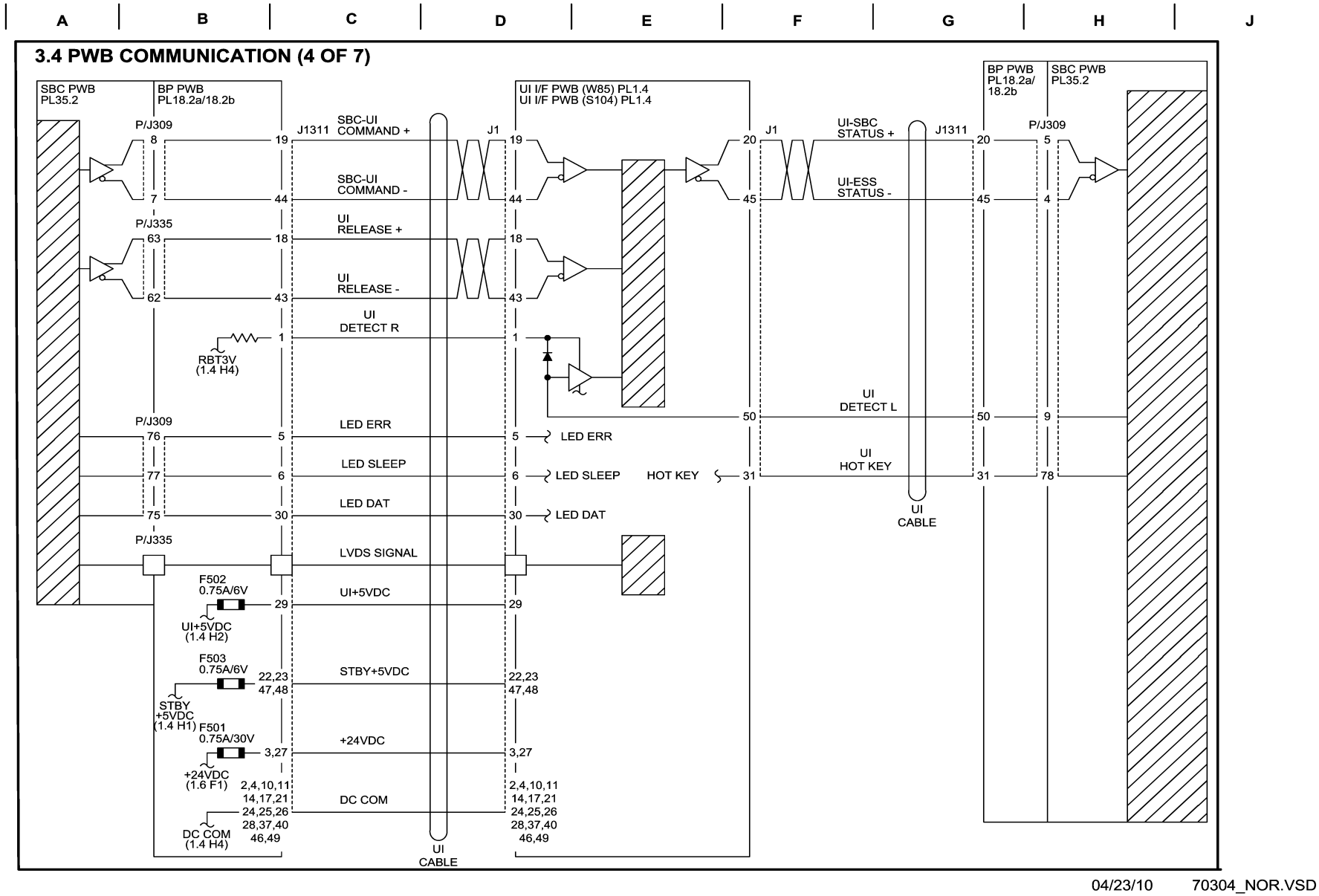

Figure 4 BSD 3.4 PWB Communication (4 of 7)

BSD 3.5 PWB Communication (5 of 7)

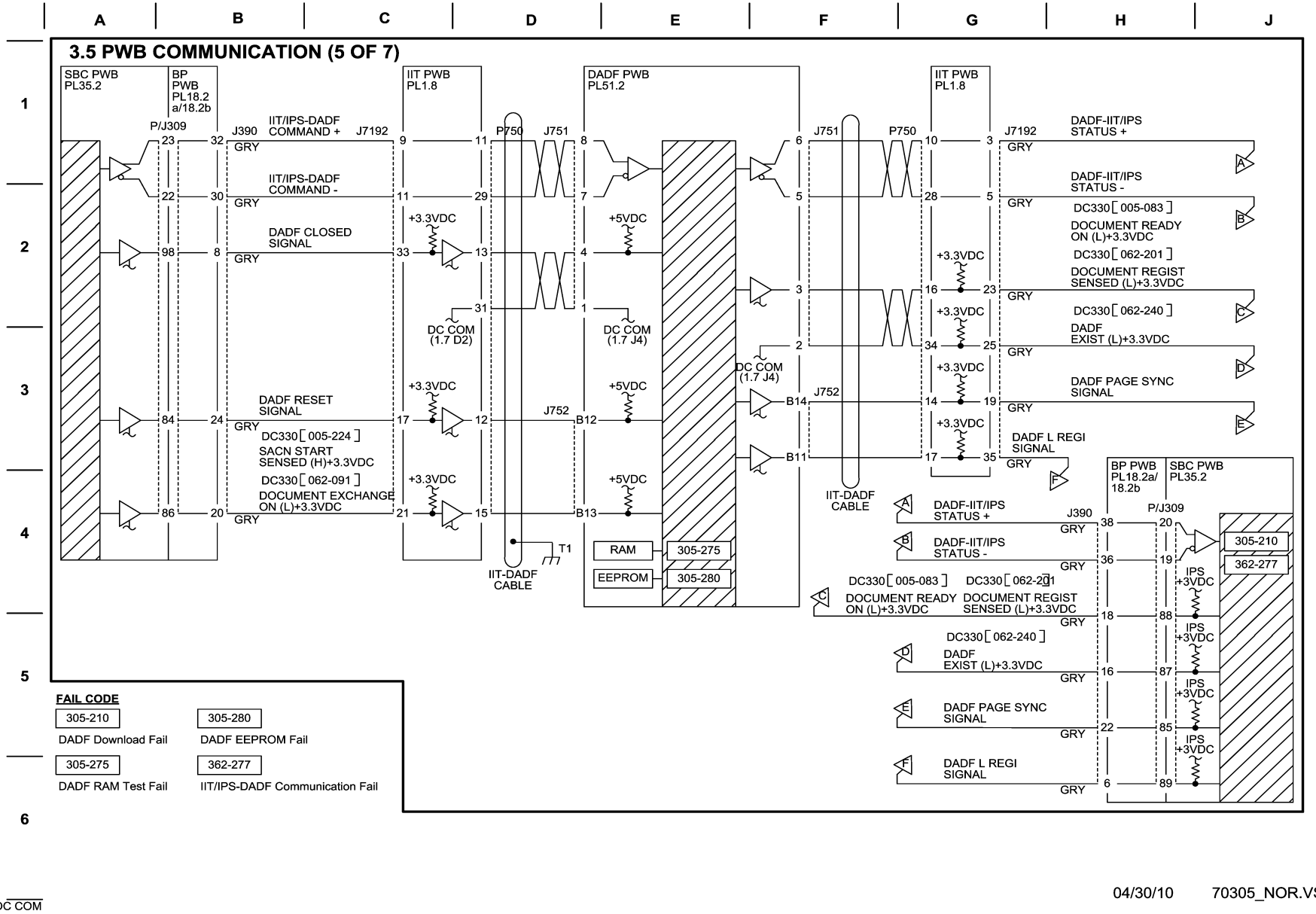

Figure 5 BSD 3.5 PWB Communication (5 of 7)

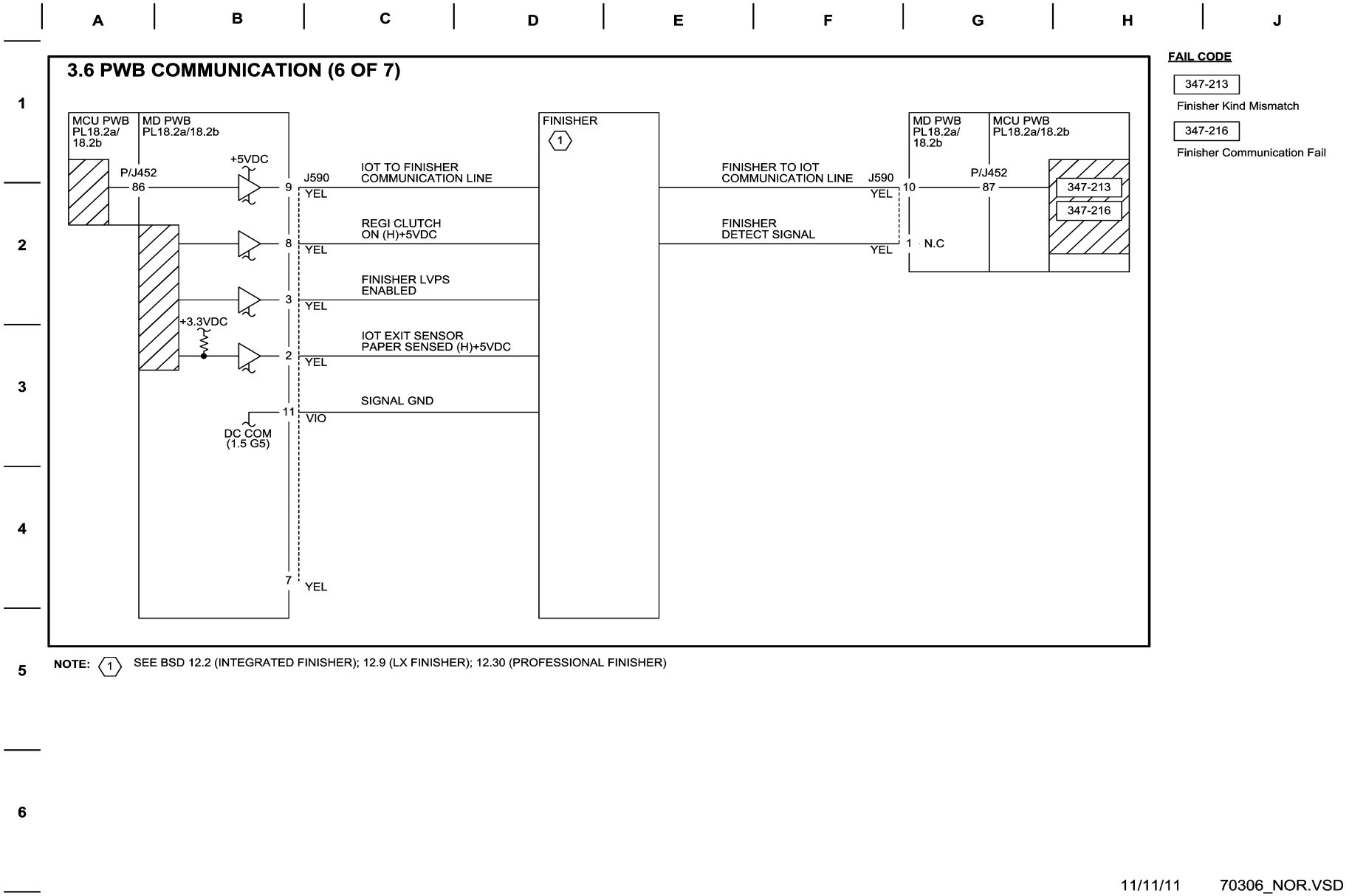

Figure 6 BSD 3.6 PWB Communication (6 of 7)

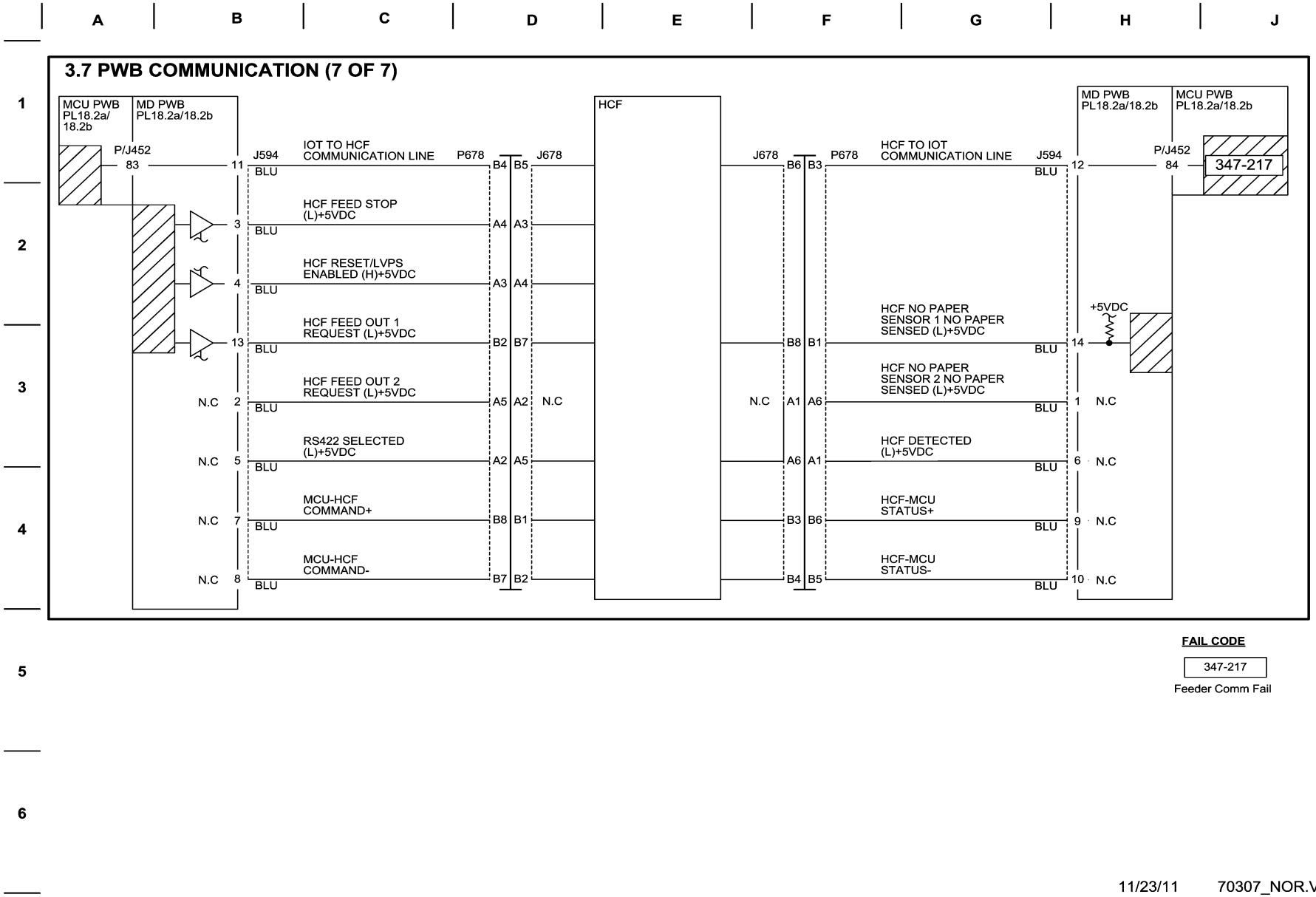

Figure 7 BSD 3.7 PWB Communication (7 of 7)

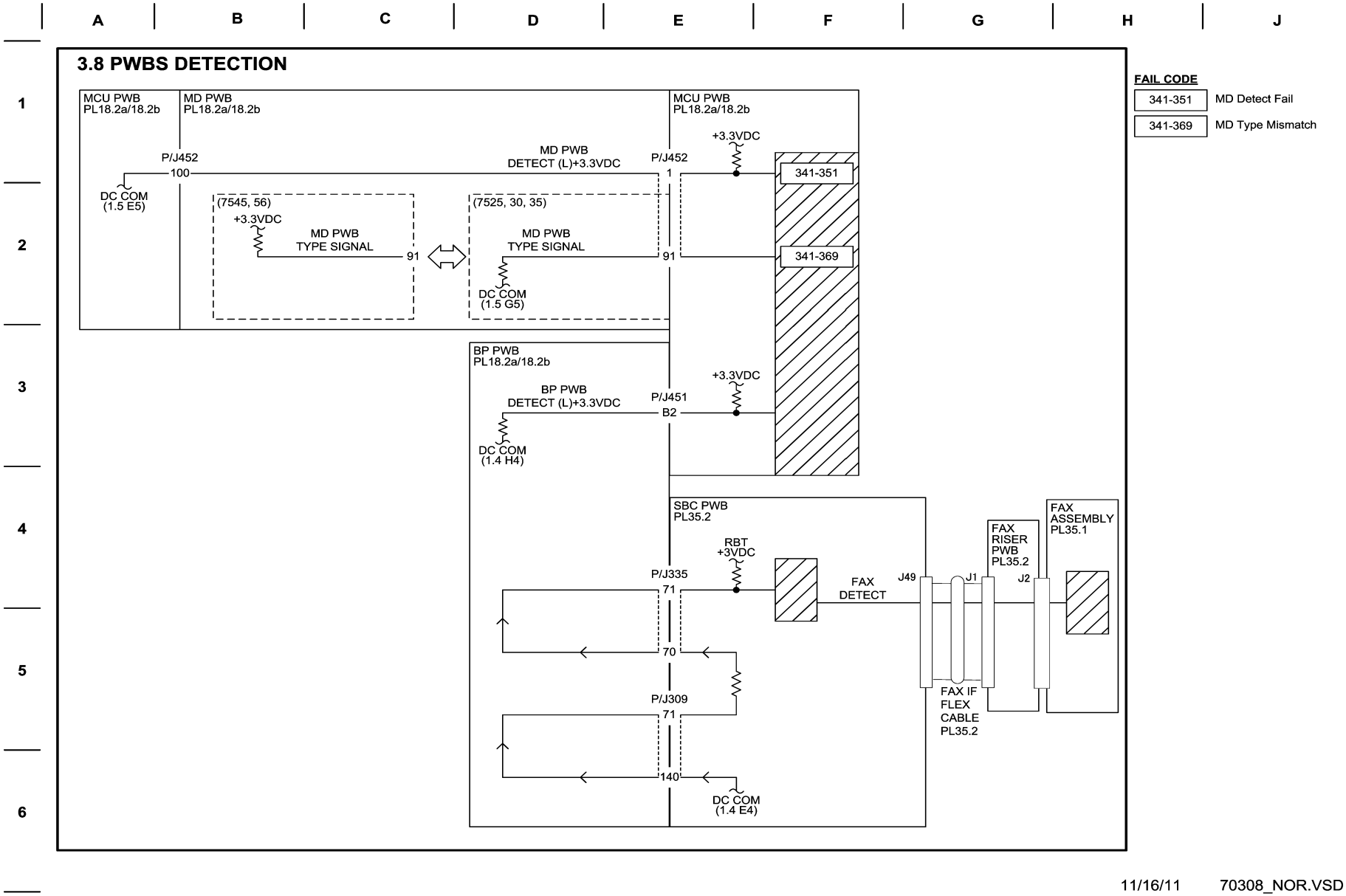

Figure 8 BSD 3.8 PWBS Detection

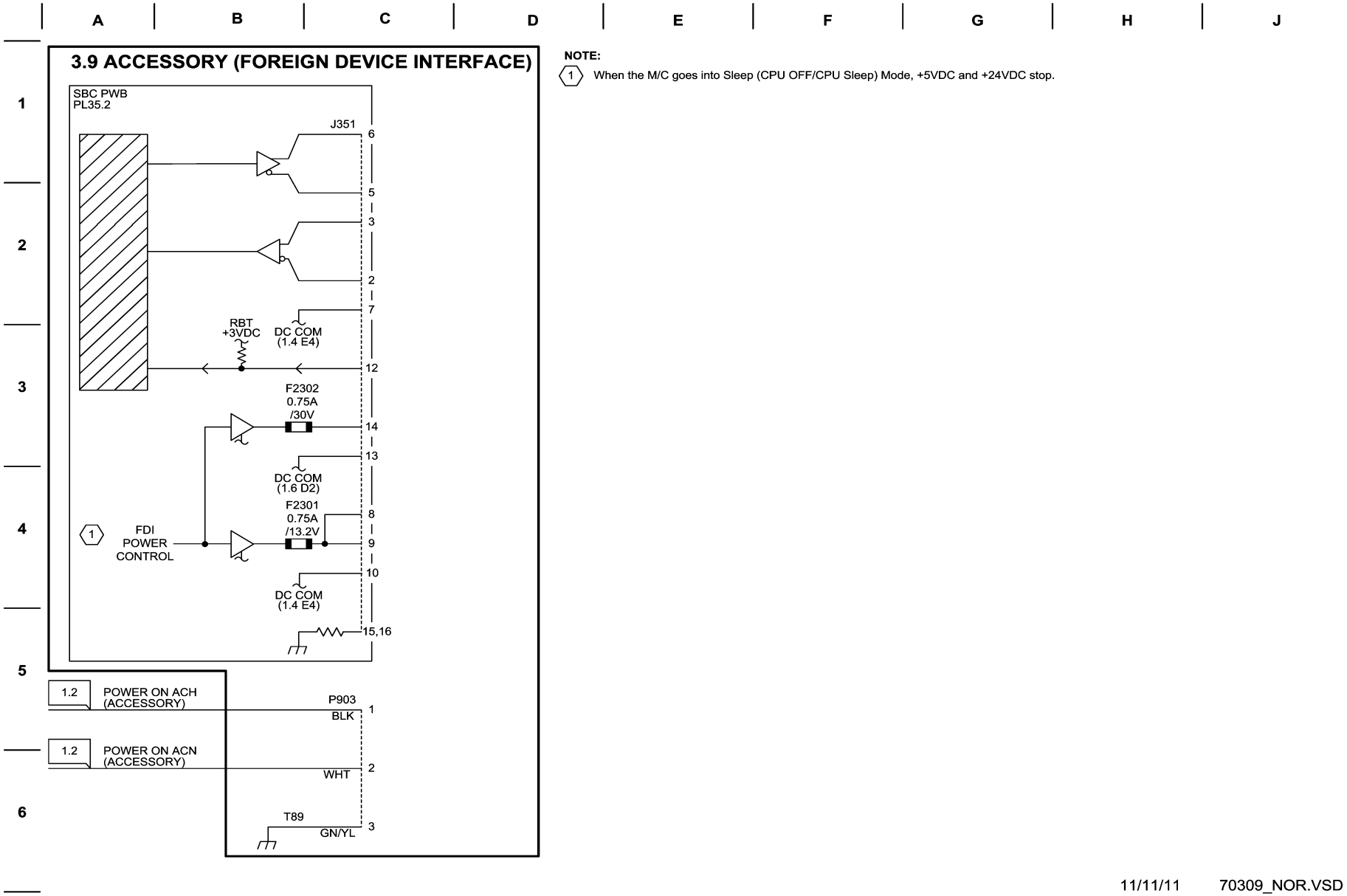

Figure 9 BSD 3.9 Accessory

BSD 4.1 Main Drive Control

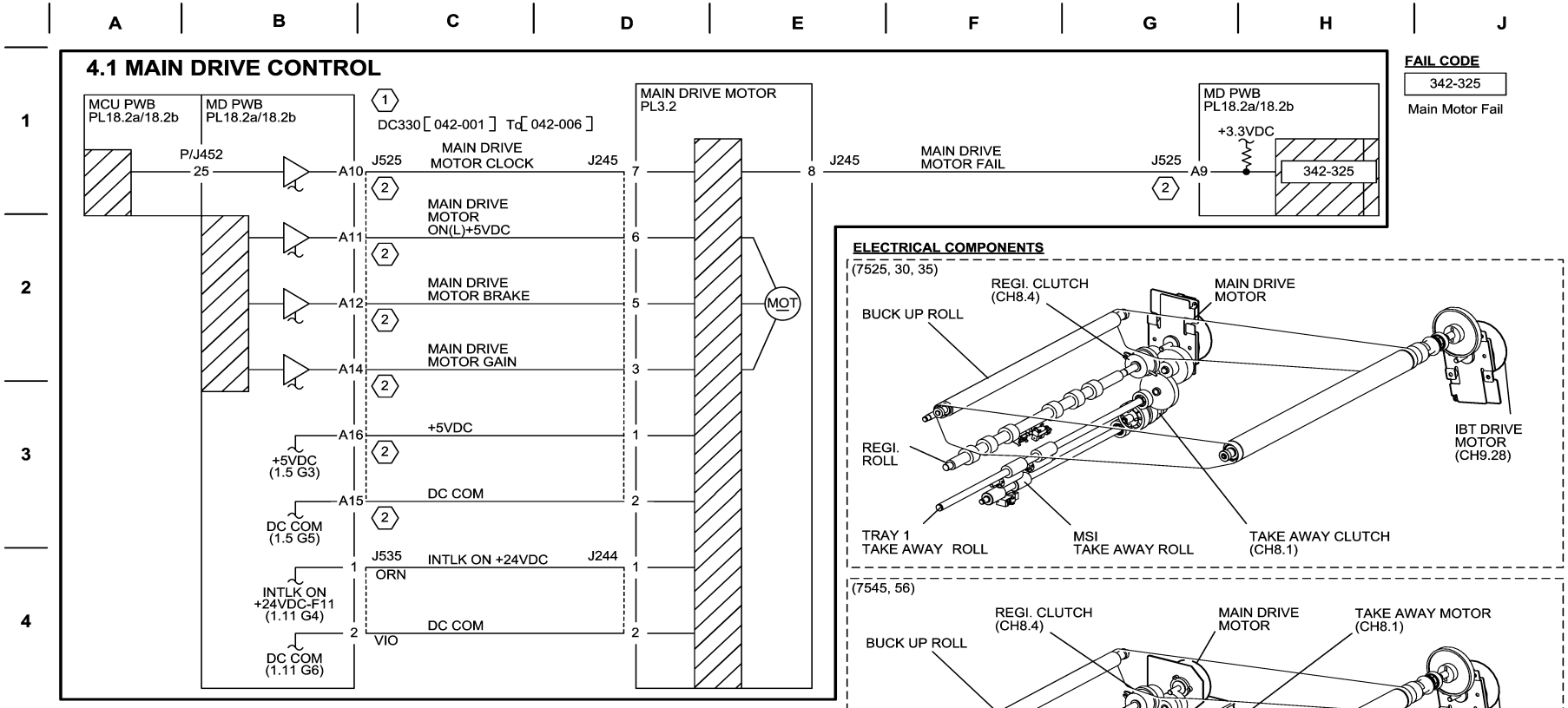

NOTE: (1) The operation speed varies depending on the diag code.

MAIN DRIVE MOTOR	Ope. Speed	Targeted Model
DC330[042-001]	79mm/sec	(7525, 30, 35)
DC330[042-002]	121mm/sec	(7525, 30, 35)/(7545, 56)
DC330[042-003]	175mm/sec	(7525, 30, 35)/(7545, 56)
DC330[042-004]	200mm/sec	(7525, 30, 35)/(7545, 56)
DC330[042-005]	228mm/sec	(7525, 30, 35)/(7545, 56)
DC330[042-006]	255mm/sec	(7525, 30, 35)/(7545, 56)

(2) Wire Color varies depending on the model.
(7525, 30, 35): BLU
(7545, 56): WHT

04/30/10 70401_NOR.VSD

Figure 1 BSD 4.1 Main Drive Control

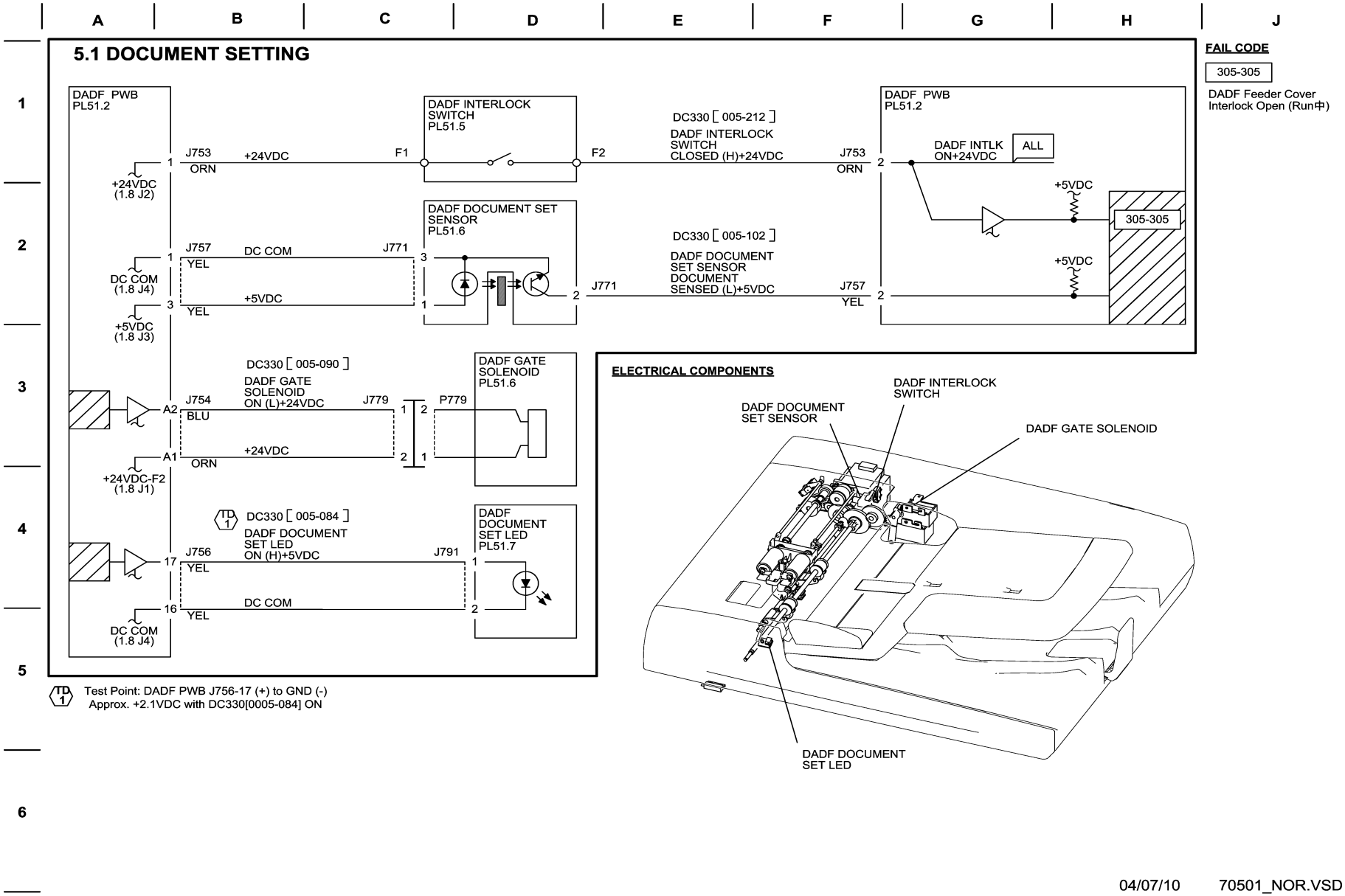

Figure 1 BSD 5.1 Document Setting

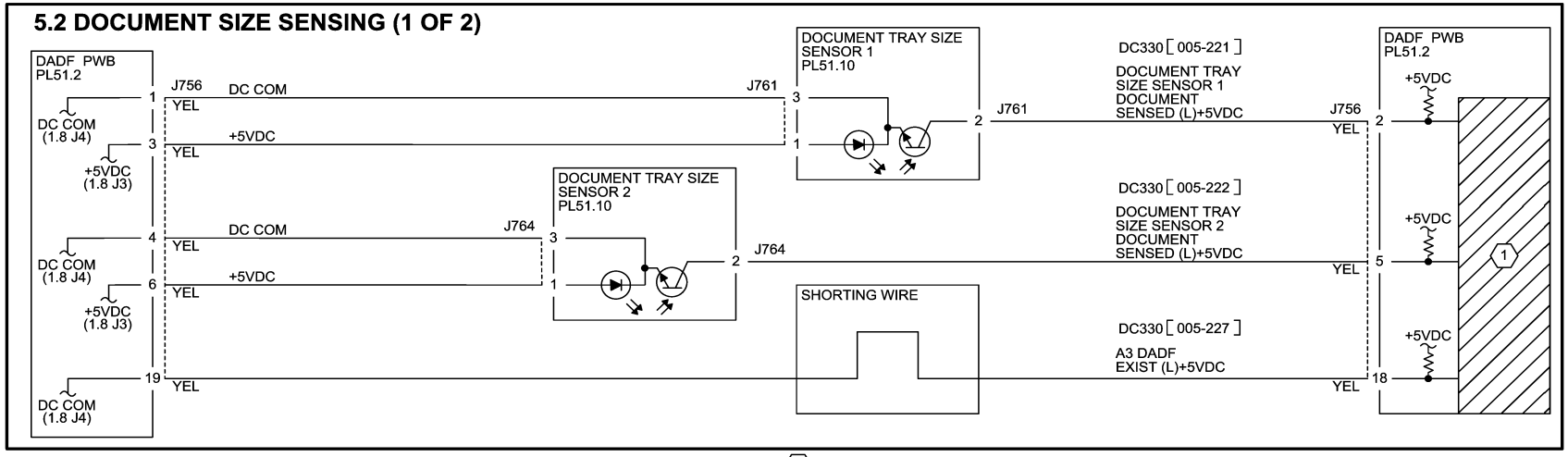

ELECTRICAL COMPONENTS

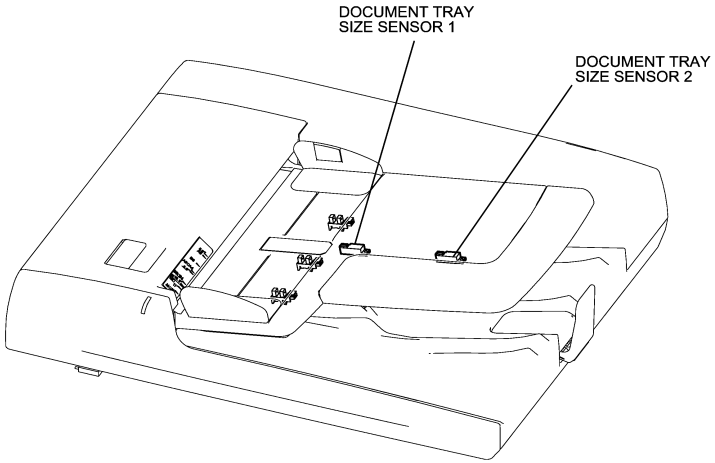

NOTE: (1) As to same-sized documents, the relation between doc size and output from each sensor is as follows.

Doc. Size	Fast Scan Direction			Slow Scan Direction		
	Set Guide Sensor 1	Set Guide Sensor 2	Set Guide Sensor 3	APS Sensor 1	Tray Size Sensor 1	Tray Size Sensor 2
A5S/5.5"X8.5"S	OFF	OFF	ON	-	ON	OFF
B5S	OFF	OFF	OFF	ON	ON	OFF
16KS/8X10S/8X10.5S	OFF	OFF	OFF	OFF	ON	OFF
A5L	OFF	ON	OFF	-	OFF	OFF
A4S	OFF	ON	OFF	-	ON	OFF
5.5"X8.5"L	OFF	ON	ON	-	OFF	OFF
8.5"X11"S	OFF	ON	ON	-	ON	OFF
8.5"X12.4"S/8.5"X13"S/8.5"X14"S	OFF	ON	ON	-	ON	ON
B5L	ON	OFF	ON	-	OFF	OFF
8"X10"L	ON	OFF	ON	-	ON	OFF
B4S	ON	OFF	ON	-	ON	ON
16KL	ON	OFF	OFF	-	OFF	OFF
8"X10.5"L	ON	OFF	OFF	-	ON	OFF
8KL	ON	OFF	OFF	-	ON	ON
8.5"X11"L	ON	ON	OFF	-	ON	OFF
11"X14.9"S/11"X17"S	ON	ON	OFF	-	ON	ON
A4L	ON	ON	ON	-	ON	OFF
A3S	ON	ON	ON	-	ON	ON

04/06/10 70502_NOR.VSD

Figure 2 BSD 5.2 Document Size Sensing (1 of 2)

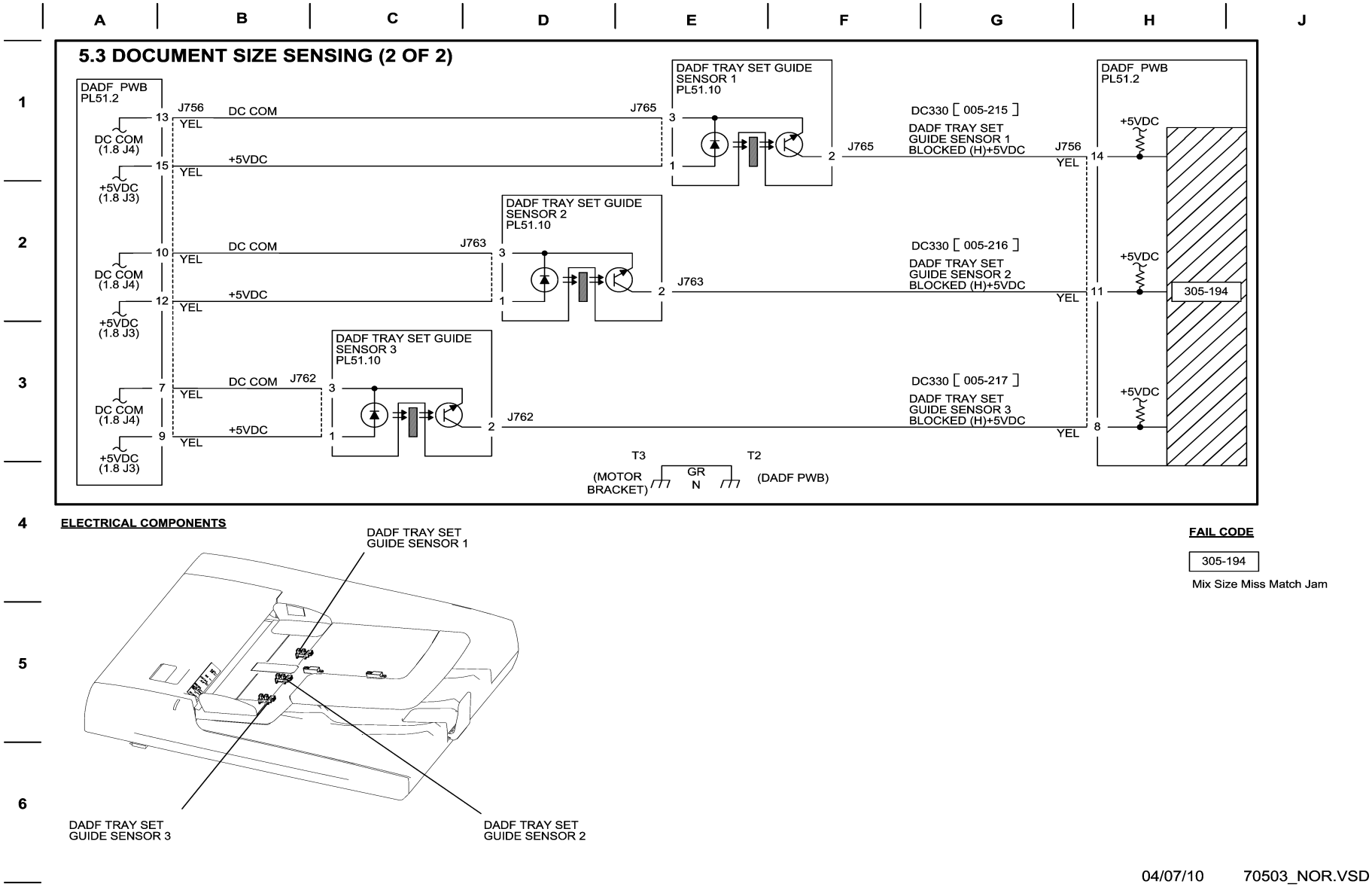

Figure 3 BSD 5.3 Document Size Sensing (2 of 2)

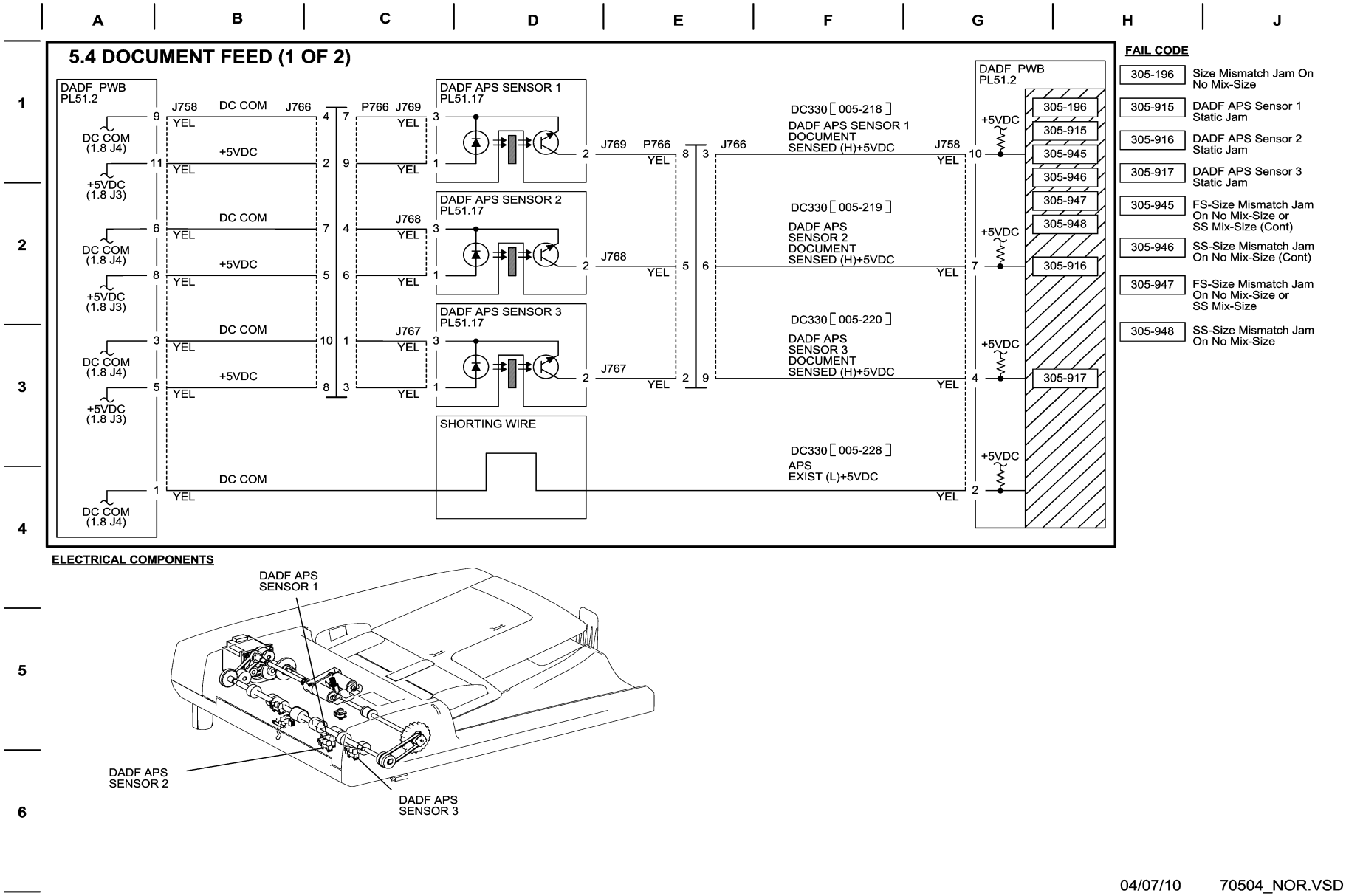

Figure 4 BSD 5.4 Document Feed (1 of 2)

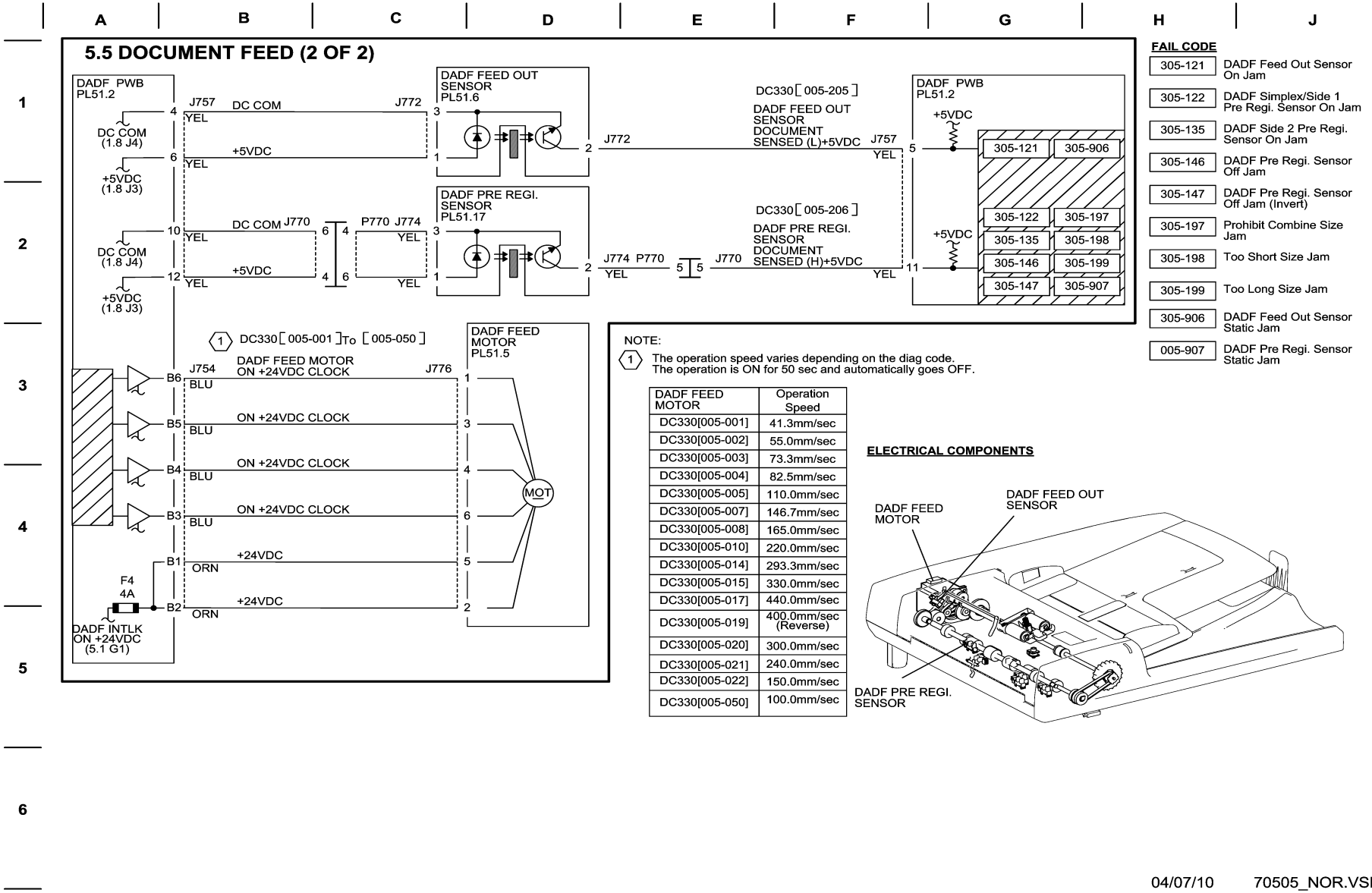

DADF FEED MOTOR	Operation Speed
DC330[005-001]	41.3mm/sec
DC330[005-002]	55.0mm/sec
DC330[005-003]	73.3mm/sec
DC330[005-004]	82.5mm/sec
DC330[005-005]	110.0mm/sec
DC330[005-007]	146.7mm/sec
DC330[005-008]	165.0mm/sec
DC330[005-010]	220.0mm/sec
DC330[005-014]	293.3mm/sec
DC330[005-015]	330.0mm/sec
DC330[005-017]	440.0mm/sec
DC330[005-019]	400.0mm/sec (Reverse)
DC330[005-020]	300.0mm/sec
DC330[005-021]	240.0mm/sec
DC330[005-022]	150.0mm/sec
DC330[005-050]	100.0mm/sec

Figure 5 BSD 5.5 Document Feed (2 of 2)

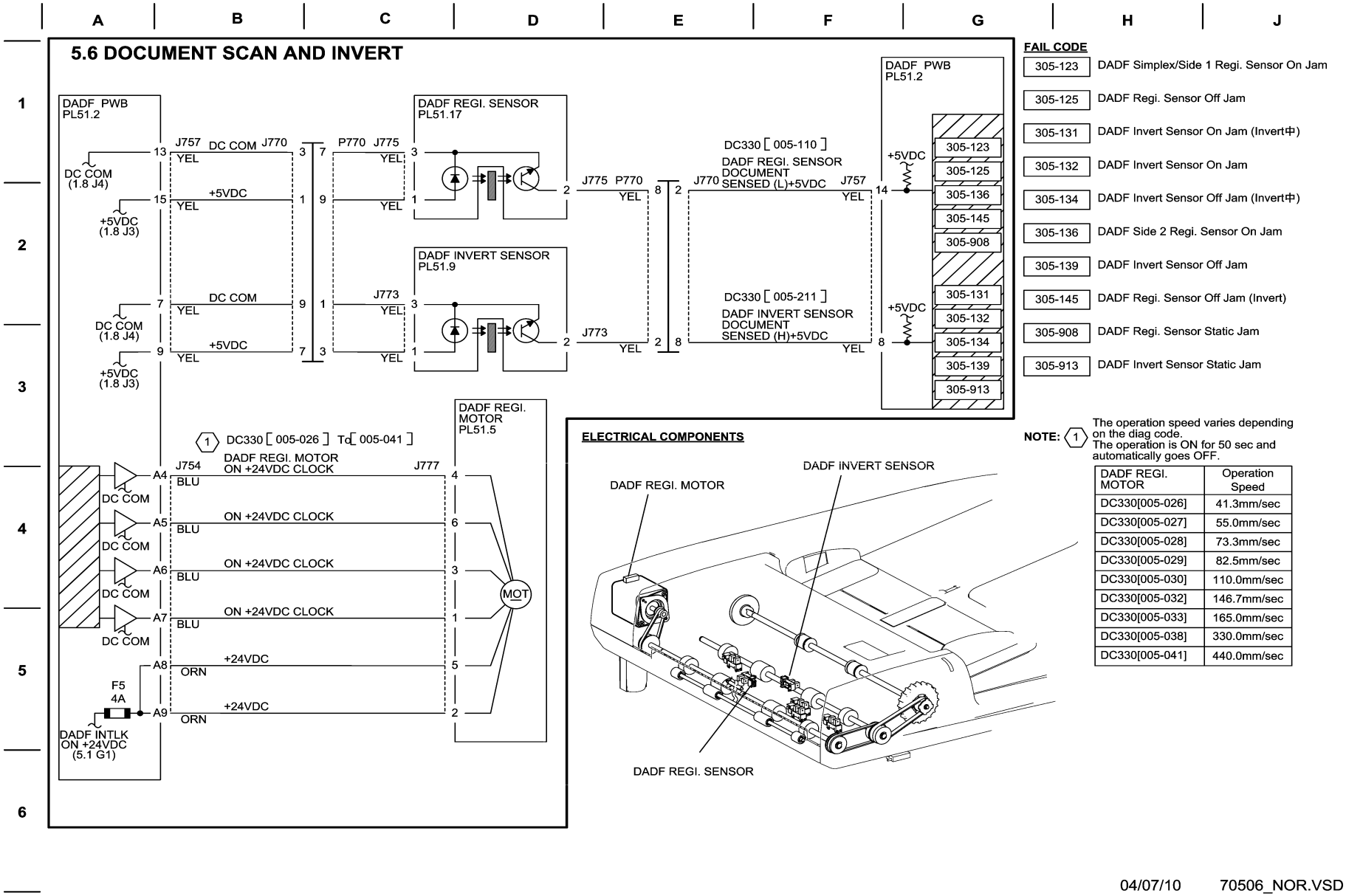

DADF REGI. MOTOR	Operation Speed
DC330[005-026]	41.3mm/sec
DC330[005-027]	55.0mm/sec
DC330[005-028]	73.3mm/sec
DC330[005-029]	82.5mm/sec
DC330[005-030]	110.0mm/sec
DC330[005-032]	146.7mm/sec
DC330[005-033]	165.0mm/sec
DC330[005-038]	330.0mm/sec
DC330[005-041]	440.0mm/sec

Figure 6 BSD 5.6 Document Scan and Invert

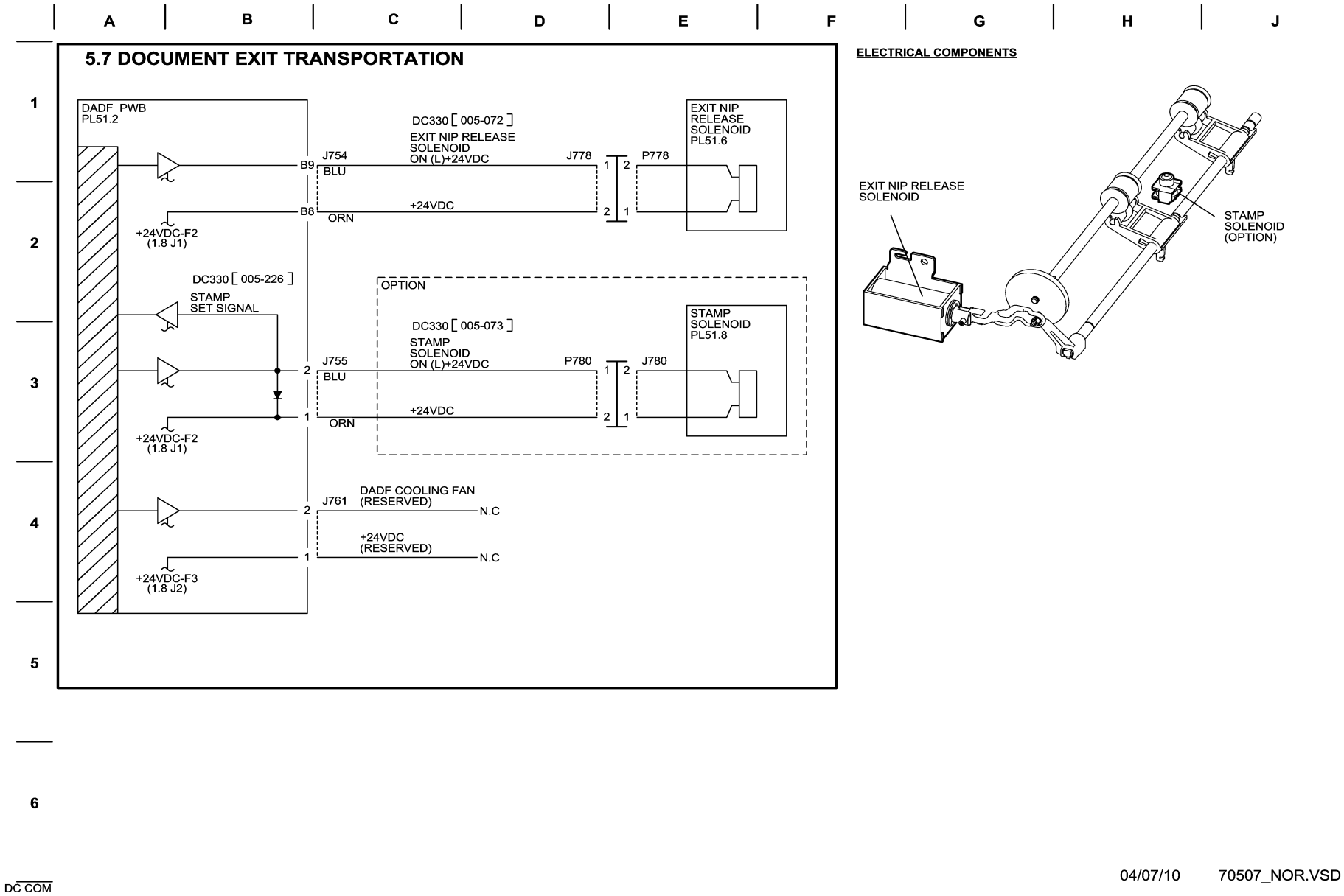

Figure 7 BSD 5.7 Document Exit Transportation

5.8 DOCUMENT PATH

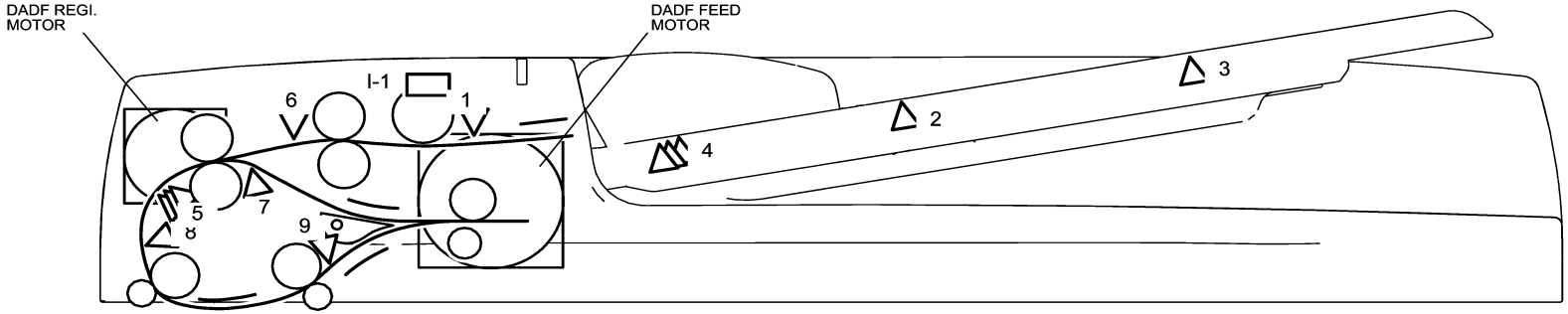

Paper Path Sensor

No.	Sensor Name	CH
1	DADF Document Set Sensor	5.1
2	Document Tray Size Sensor 1	5.2
3	Document Tray Size Sensor 2	5.2
4	DADF Tray Set Guide Sensor 1～3	5.3
5	DADF APS Sensor 1～3	5.4
6	DADF Feed Out Sensor	5.5
7	DADF Pre Regi. Sensor	5.5
8	DADF Regi. Sensor	5.6
9	DADF Invert Sensor	5.6

Interlock Switch

No.	Switch Name	CH
I-1	DADF Interlock Switch	5.1

04/07/10 70508_NOR.VSD

Figure 8 BSD 5.8 Document Path

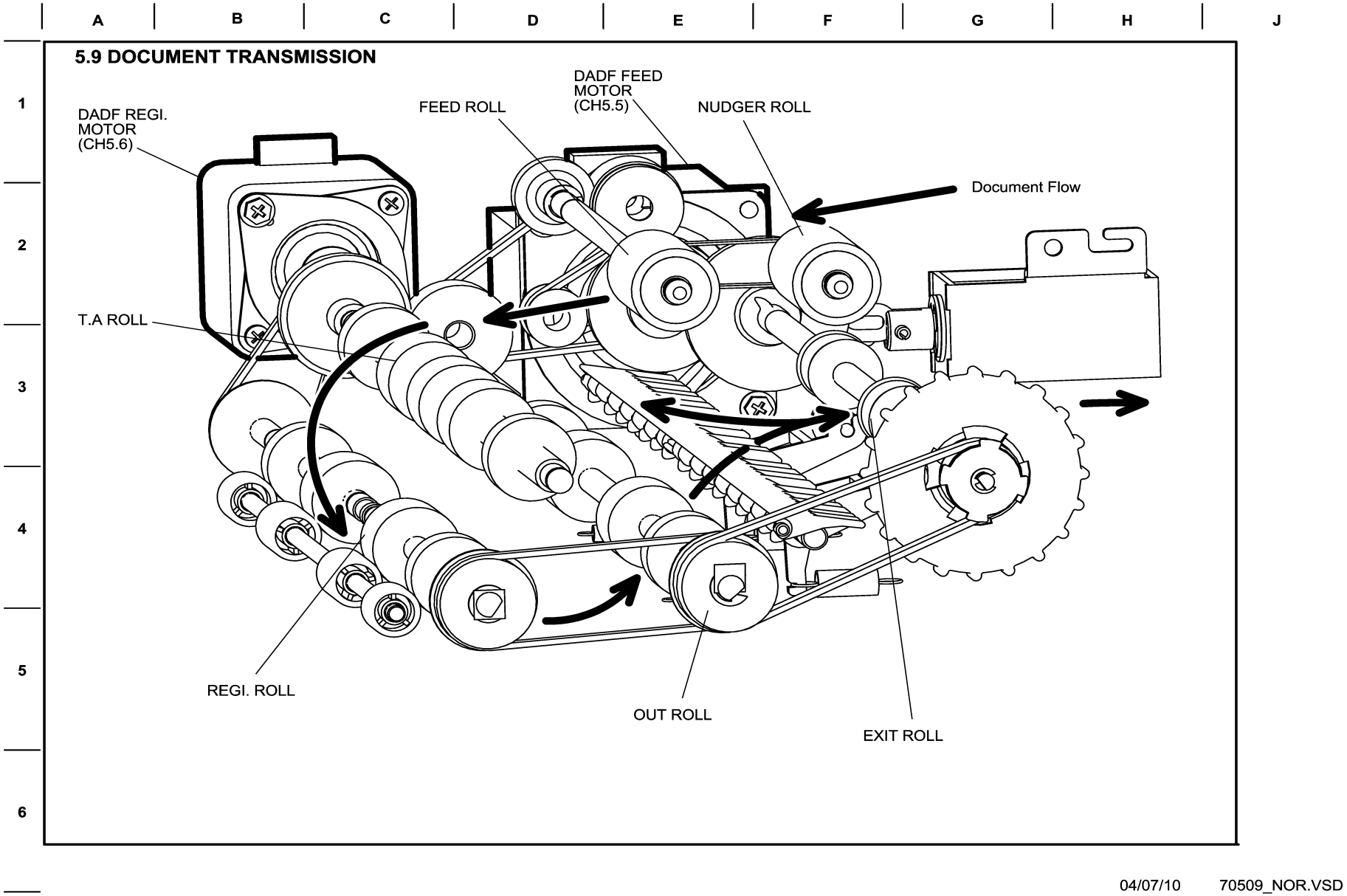

Figure 9 BSD 5.9 Document Transmission

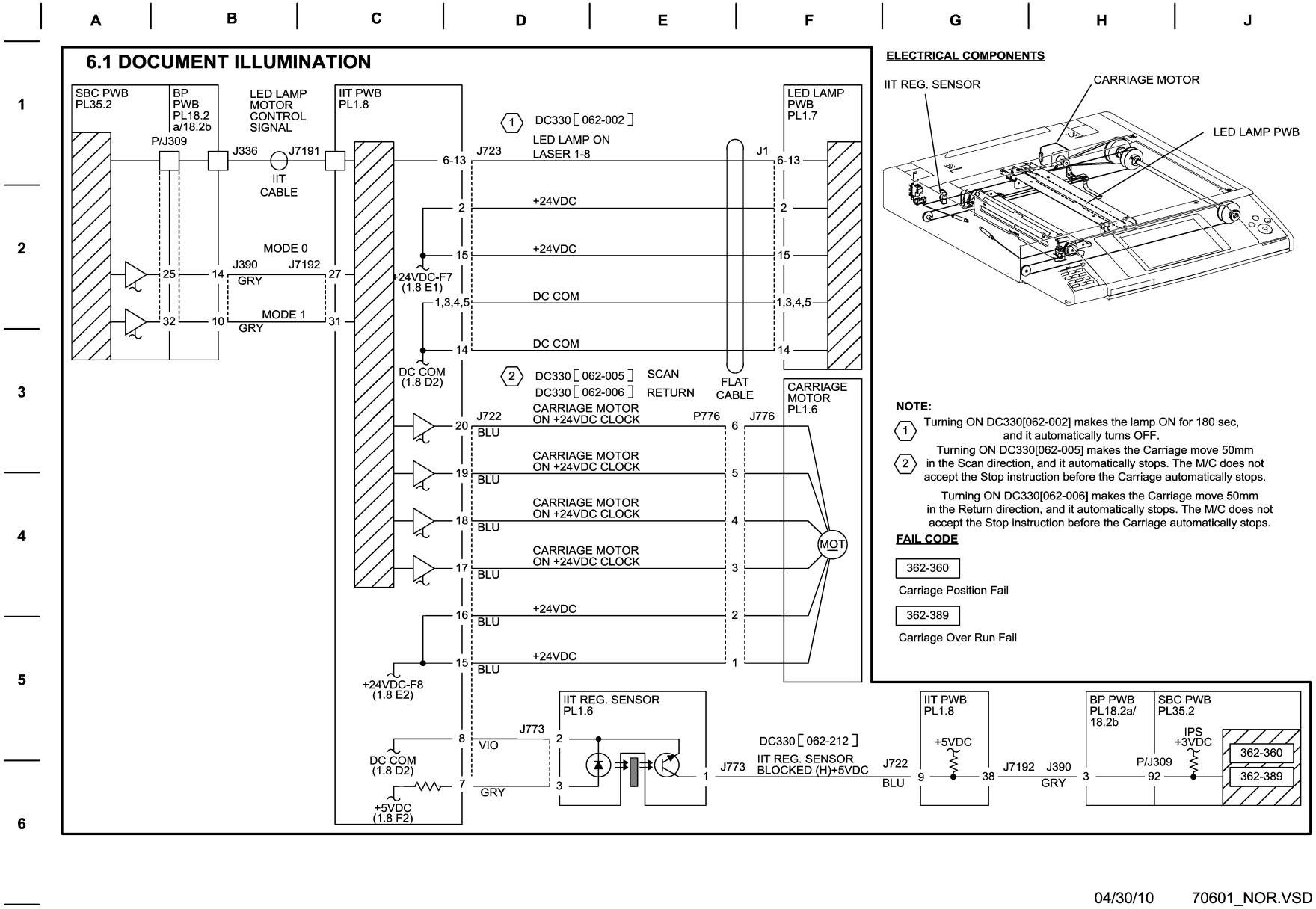

Figure 1 BSD 6.1 Document Illumination

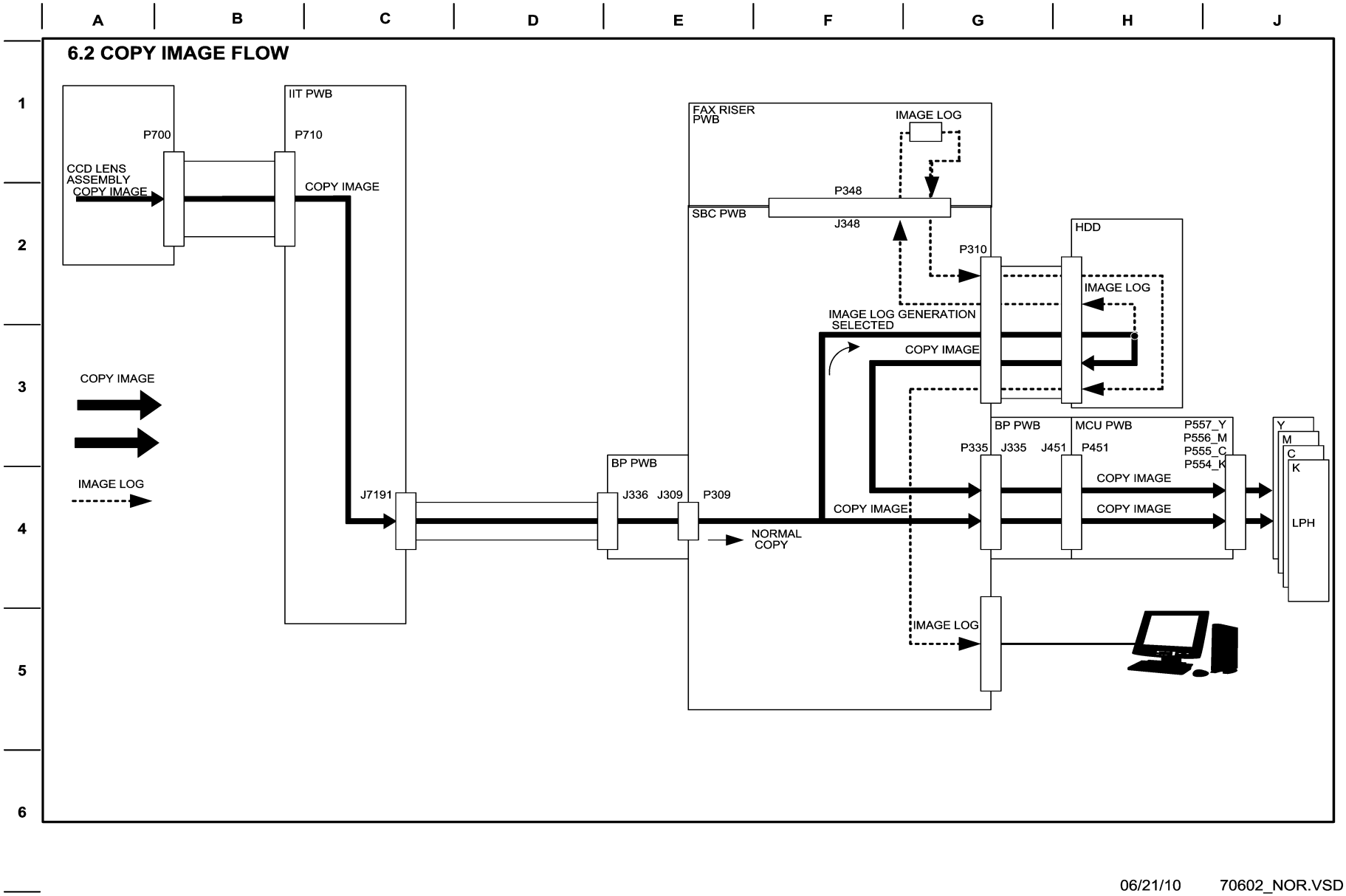

06/21/10 70602_NOR.VSD

Figure 2 BSD 6.2 Copy Image Flow

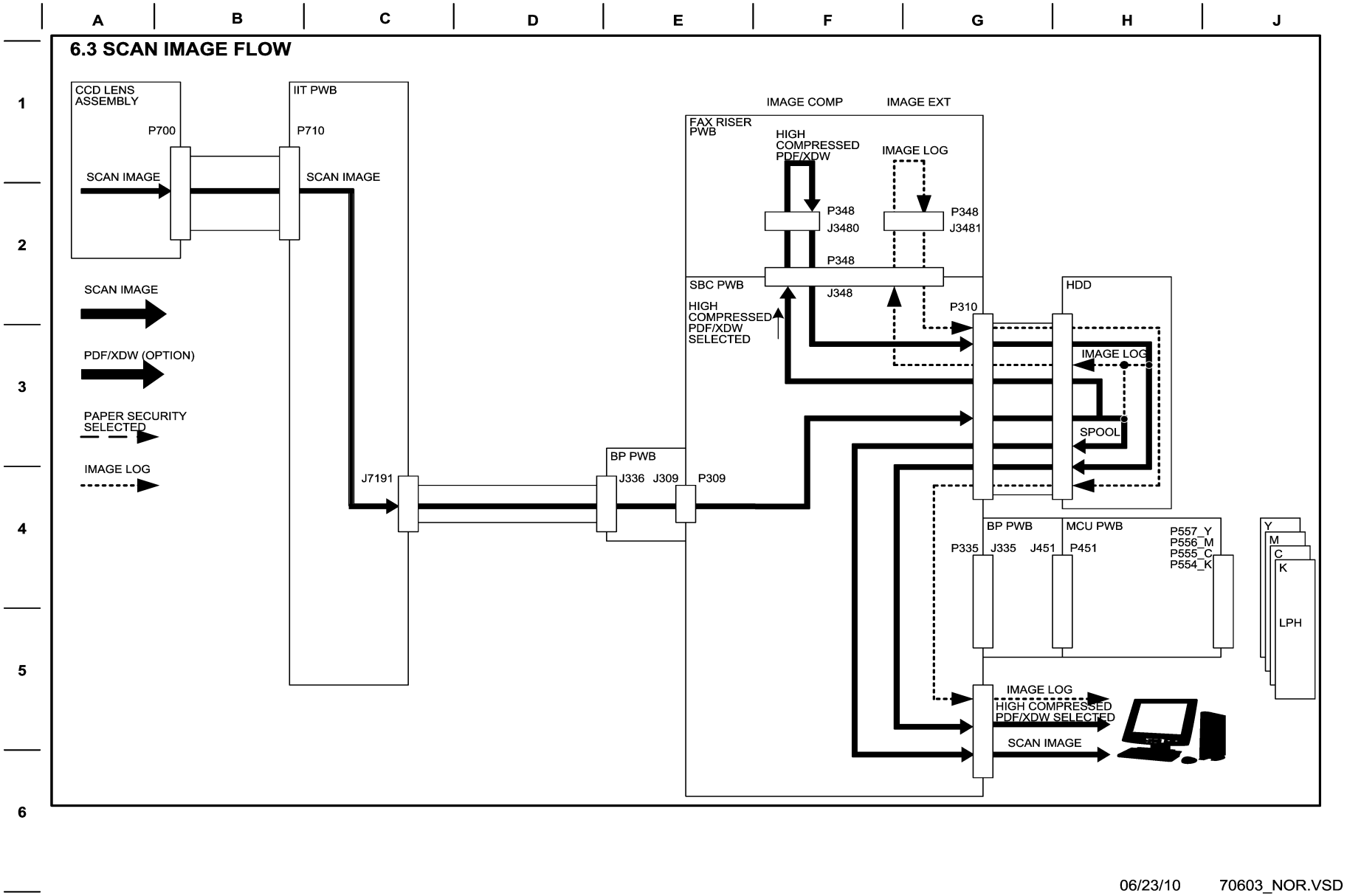

06/23/10 70603_NOR.VSD

Figure 3 BSD 6.3 Scan Image Flow

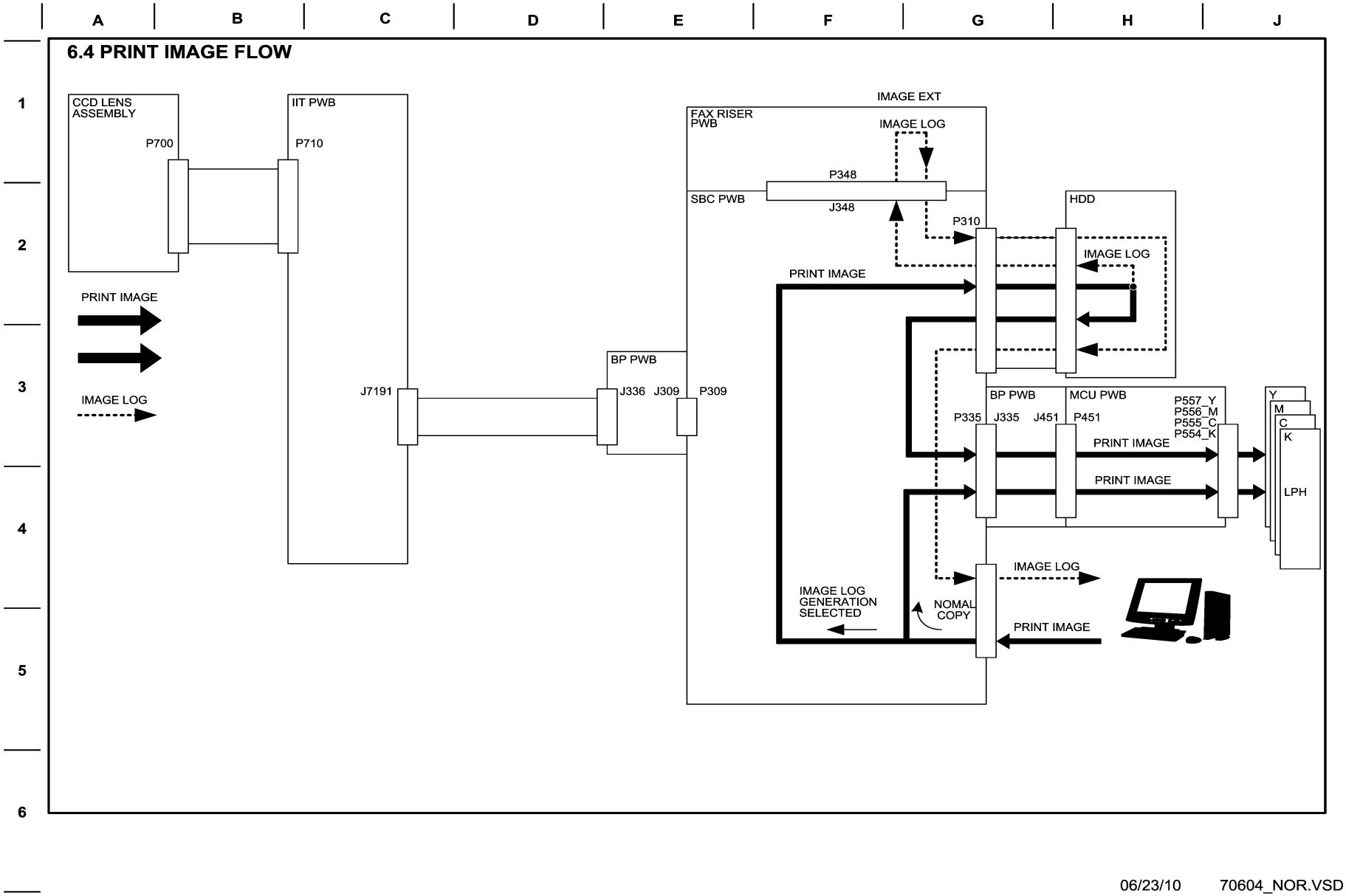

Figure 4 BSD 6.4 Print Image Flow

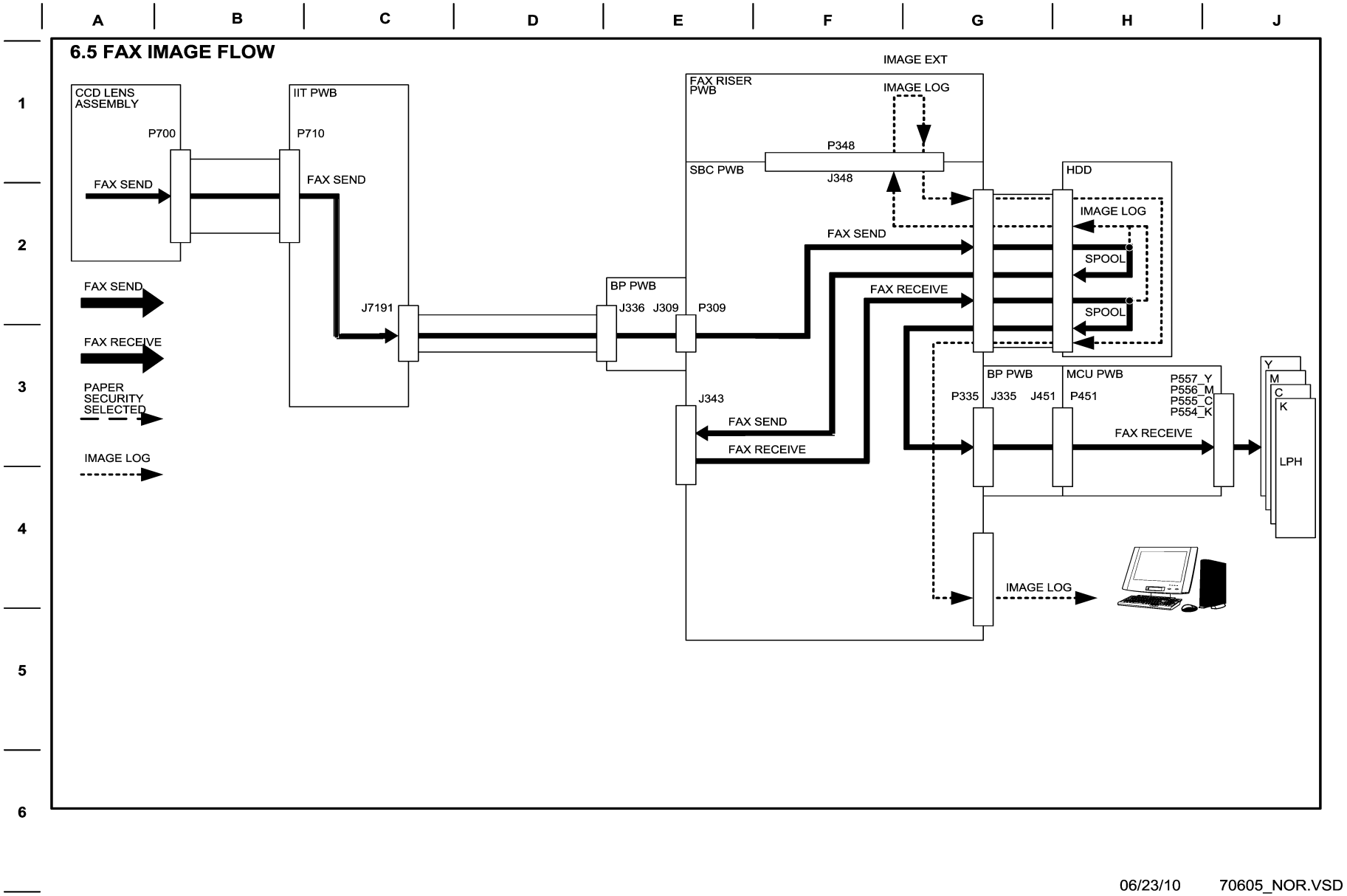

06/23/10 70605_NOR.VSD

Figure 5 BSD 6.5 Fax Image Flow

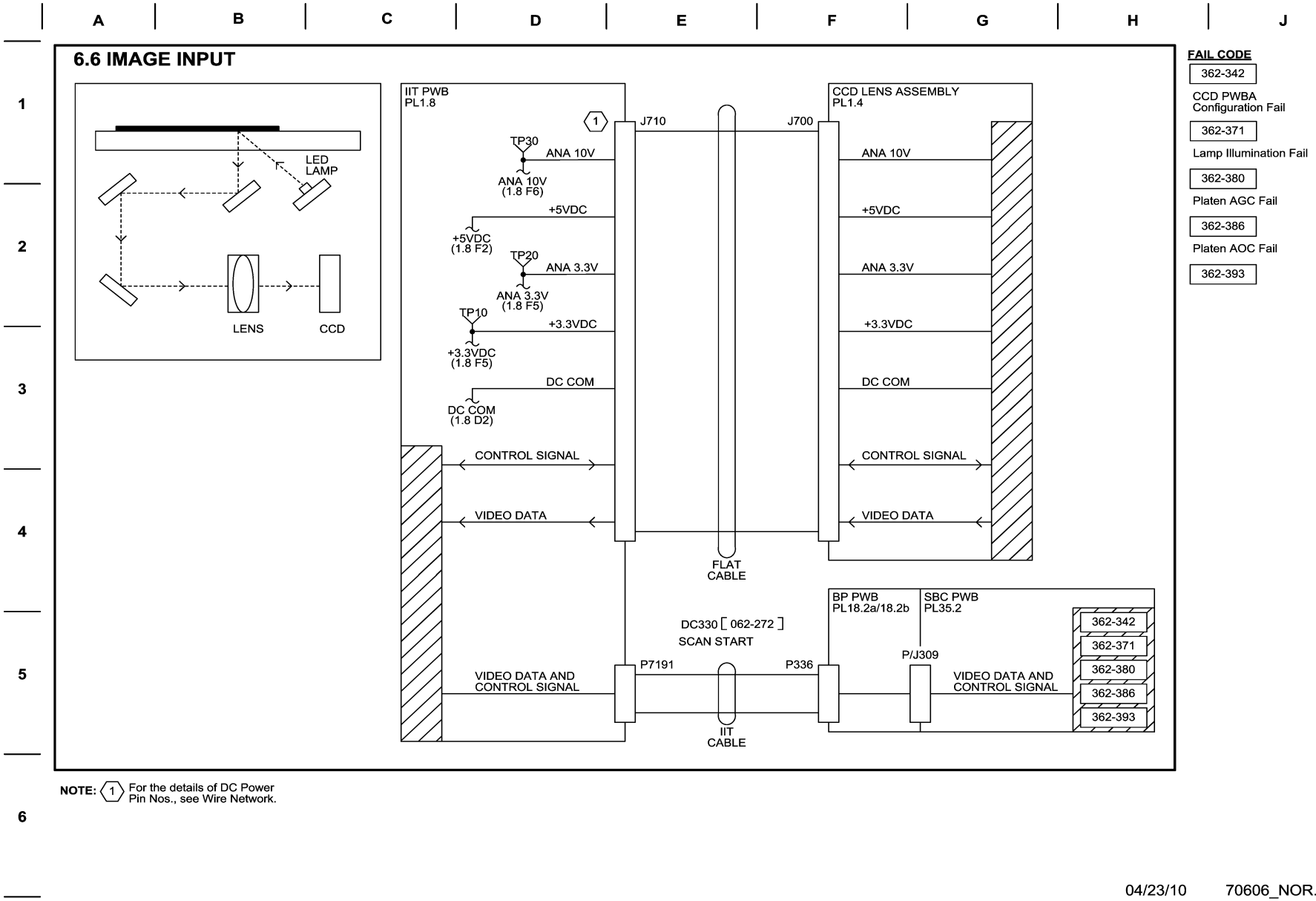

Figure 6 BSD 6.6 Image Input

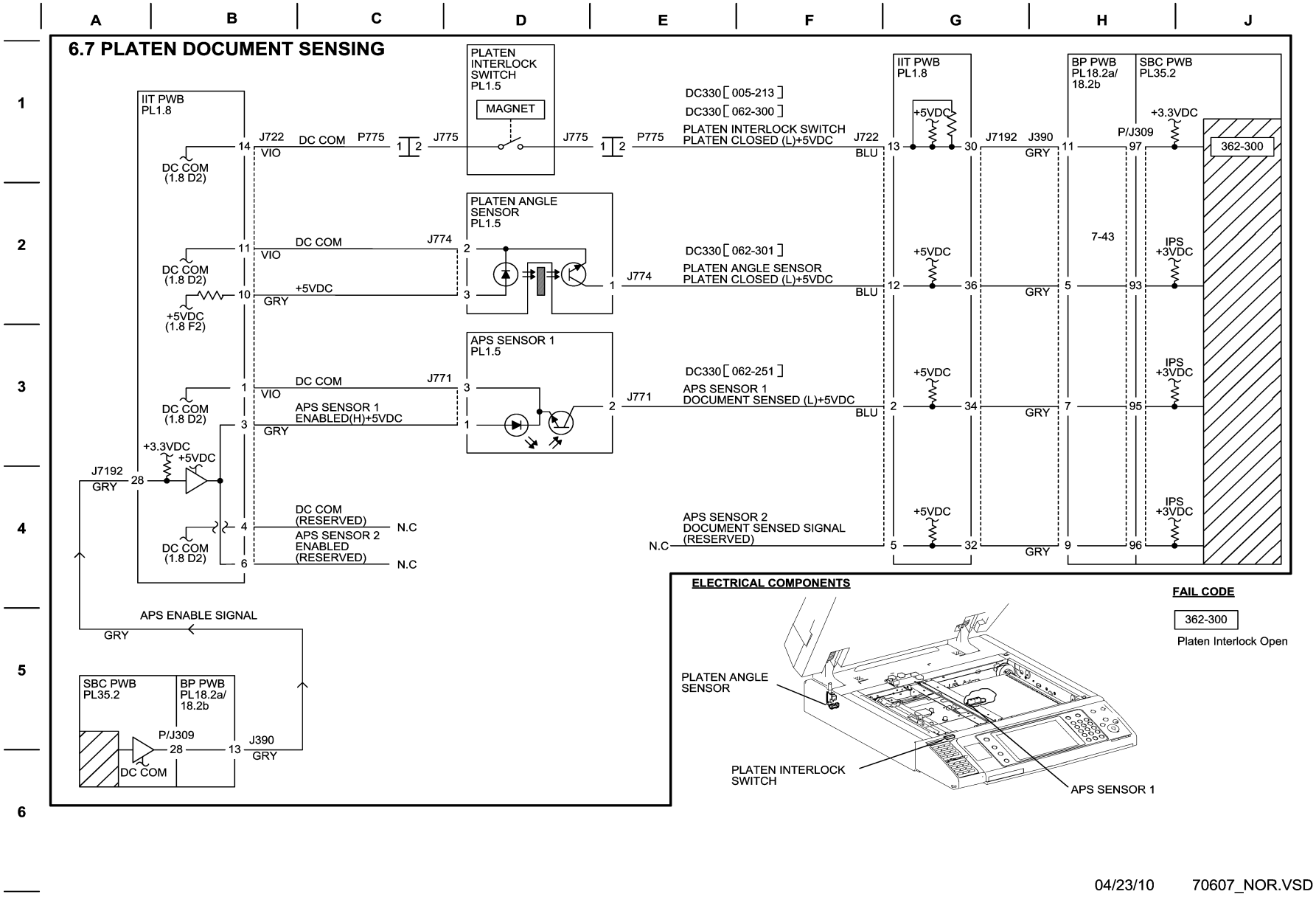

Figure 7 BSD 6.7 Platen Document Sensing

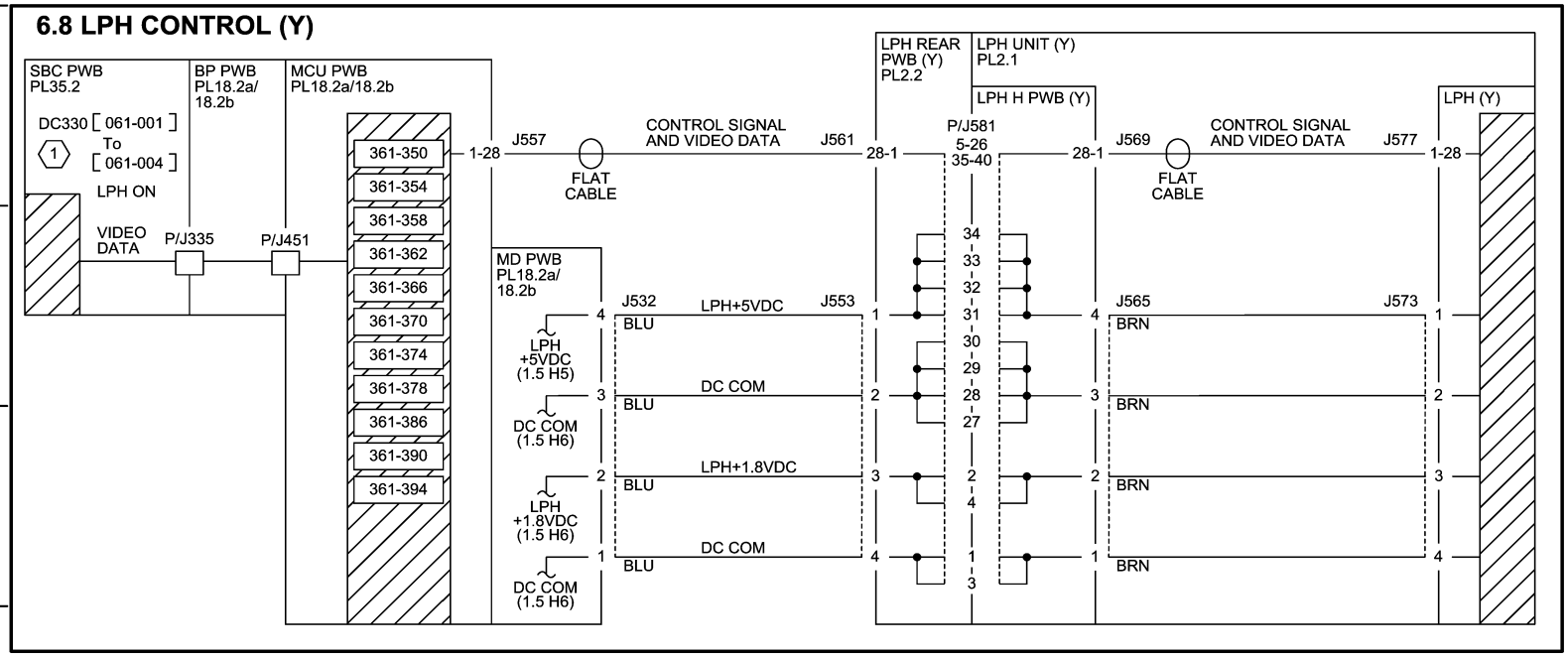

FAIL CODE

- 361-350 LPH Power On Fail Y
- 361-354 LPH Download Data Fail Y
- 361-358 LPH Mismatch Fail Y
- 361-362 LPH Read Fail Y
- 361-366 LPH Write Fail Y
- 361-370 LPH Act Fail Y
- 361-374 LPH Chip Fail Y
- 361-378 LPH Ltrg Fail Y
- 361-386 LPH PLL Lock Fail Y
- 361-390 LPH FFC Connect Posi Fail Y
- 361-394 LPH FFC Connect Nega Fail Y

NOTE: (1) The operation varies depending on the diag code.

LPH	Operation
DC330[061-001]	Forcedly turns ON LPH. (Solid pattern)
DC330[061-002]	Forcedly turns ON LPH. (Cin 50%)
DC330[061-003]	Forcedly turns ON LPH. (Streak Evaluation pattern)
DC330[061-004]	Performs only thyristor transfer.

ELECTRICAL COMPONENTS

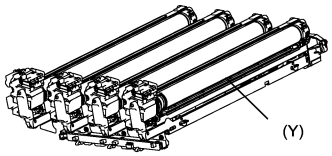

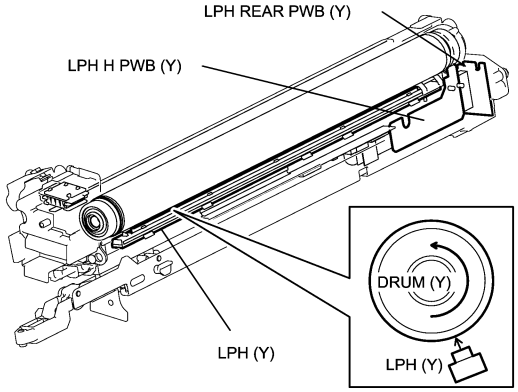

Figure 8 BSD 6.8 LPH Control (Y)

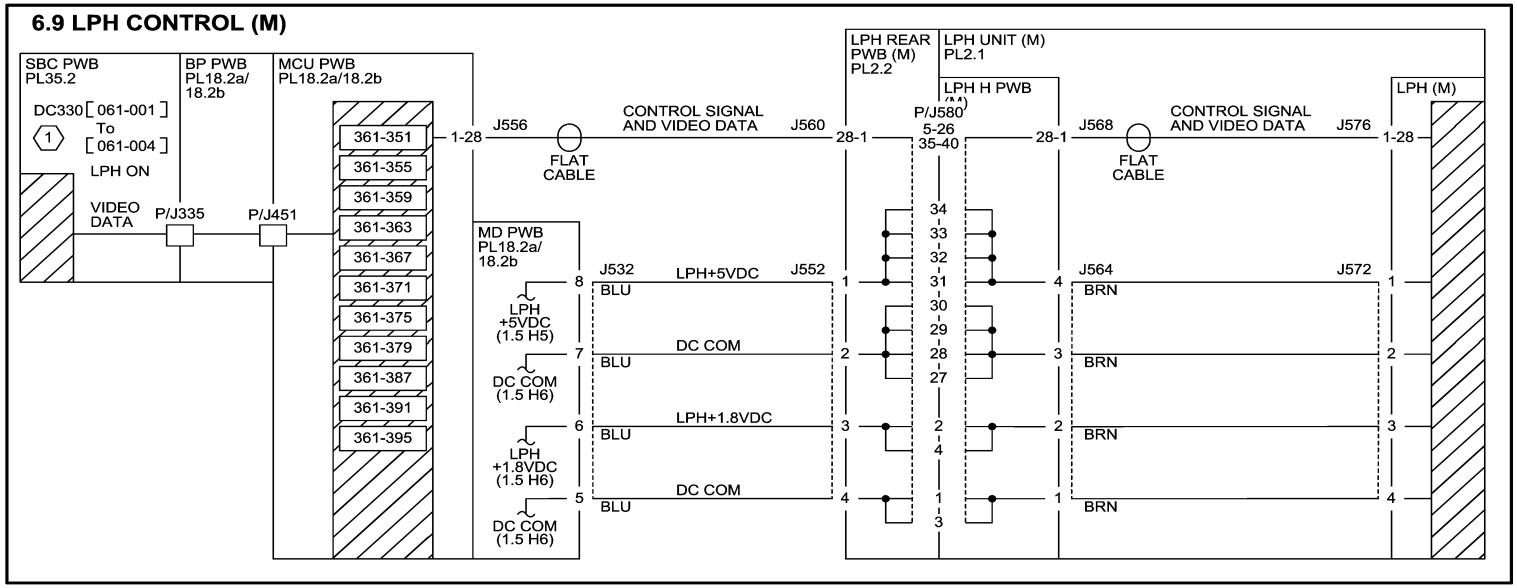

FAIL CODE

361-351	LPH Power On Fail M
361-355	LPH Download Data Fail M
361-359	LPH Mismatch Fail M
361-363	LPH Read Fail M
361-367	LPH Write Fail M
361-371	LPH Act Fail M
361-375	LPH Chip Fail M
361-379	LPH Ltrg Fail M
361-387	LPH PLL Lock Fail M
361-391	LPH FFC Connect Posi Fail M
361-395	LPH FFC Connect Nega Fail M

NOTE: (1) The operation varies depending on the diag code.

LPH	Operation
DC330[061-001]	Forcedly turns ON LPH. (Solid pattern)
DC330[061-002]	Forcedly turns ON LPH. (Cin 50%)
DC330[061-003]	Forcedly turns ON LPH. (Streak Evaluation pattern)
DC330[061-004]	Performs only thyristor transfer.

ELECTRICAL COMPONENTS

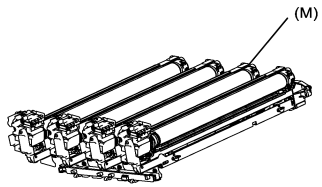

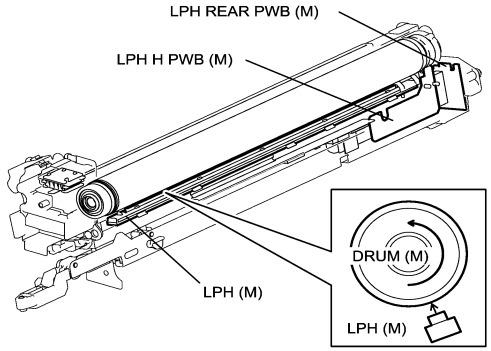

04/08/10 70609_NOR.VSD

Figure 9 BSD 6.9 LPH Control (M)

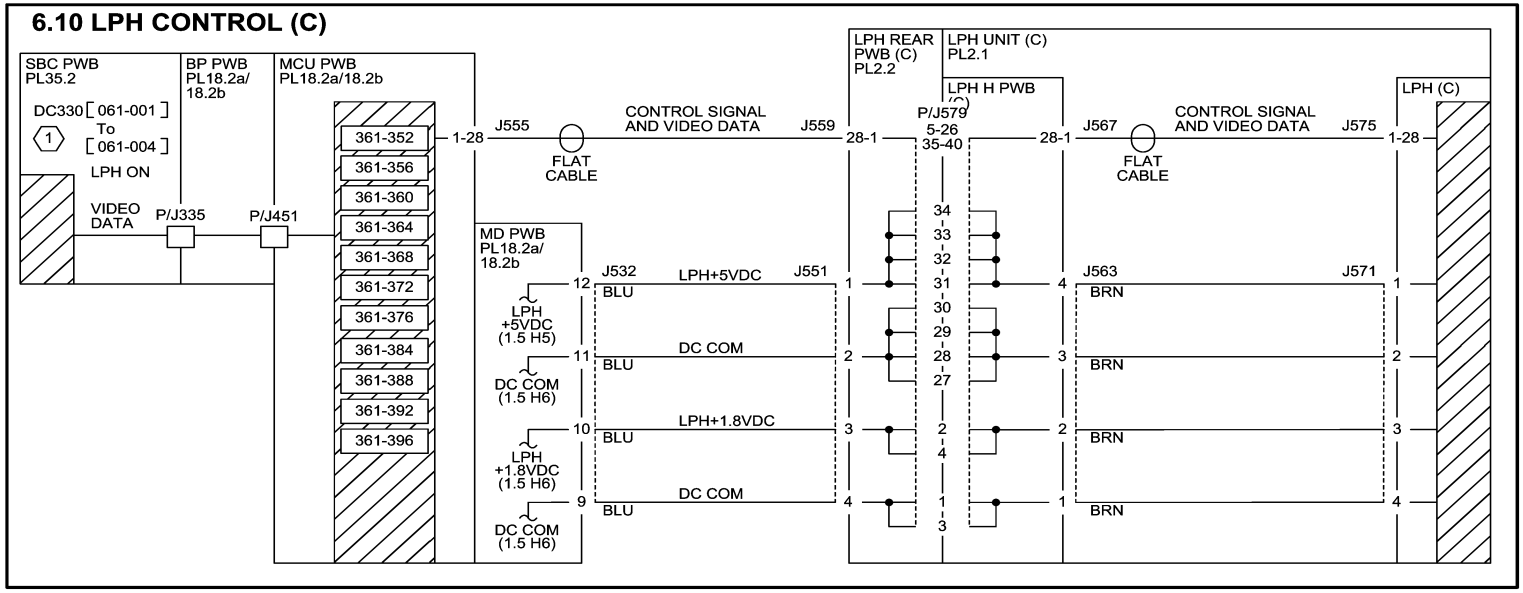

FAIL CODE

361-352	LPH Power On Fail C
361-356	LPH Download Data Fail C
361-360	LPH Mismatch Fail C
361-364	LPH Read Fail C
361-368	LPH Write Fail C
361-372	LPH Act Fail C
361-376	LPH Chip Fail C
361-384	LPH Ltrg Fail C
361-388	LPH PLL Lock Fail C
361-392	LPH FFC Connect Posi Fail C
361-396	LPH FFC Connect Nega Fail C

NOTE: (1) The operation varies depending on the diag code.

LPH	Operation
DC330[061-001]	Forcedly turns ON LPH. (Solid pattern)
DC330[061-002]	Forcedly turns ON LPH. (Cin 50%)
DC330[061-003]	Forcedly turns ON LPH. (Streak Evaluation pattern)
DC330[061-004]	Performs only thyristor transfer.

ELECTRICAL COMPONENTS

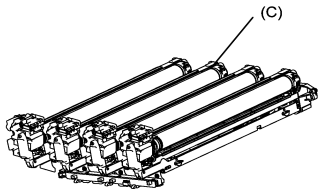

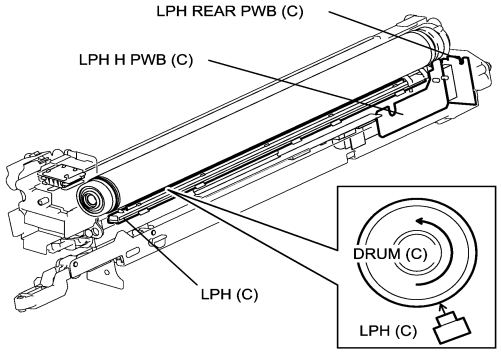

04/08/10 70610_NOR.VSD

Figure 10 BSD 6.10 LPH Control (C)

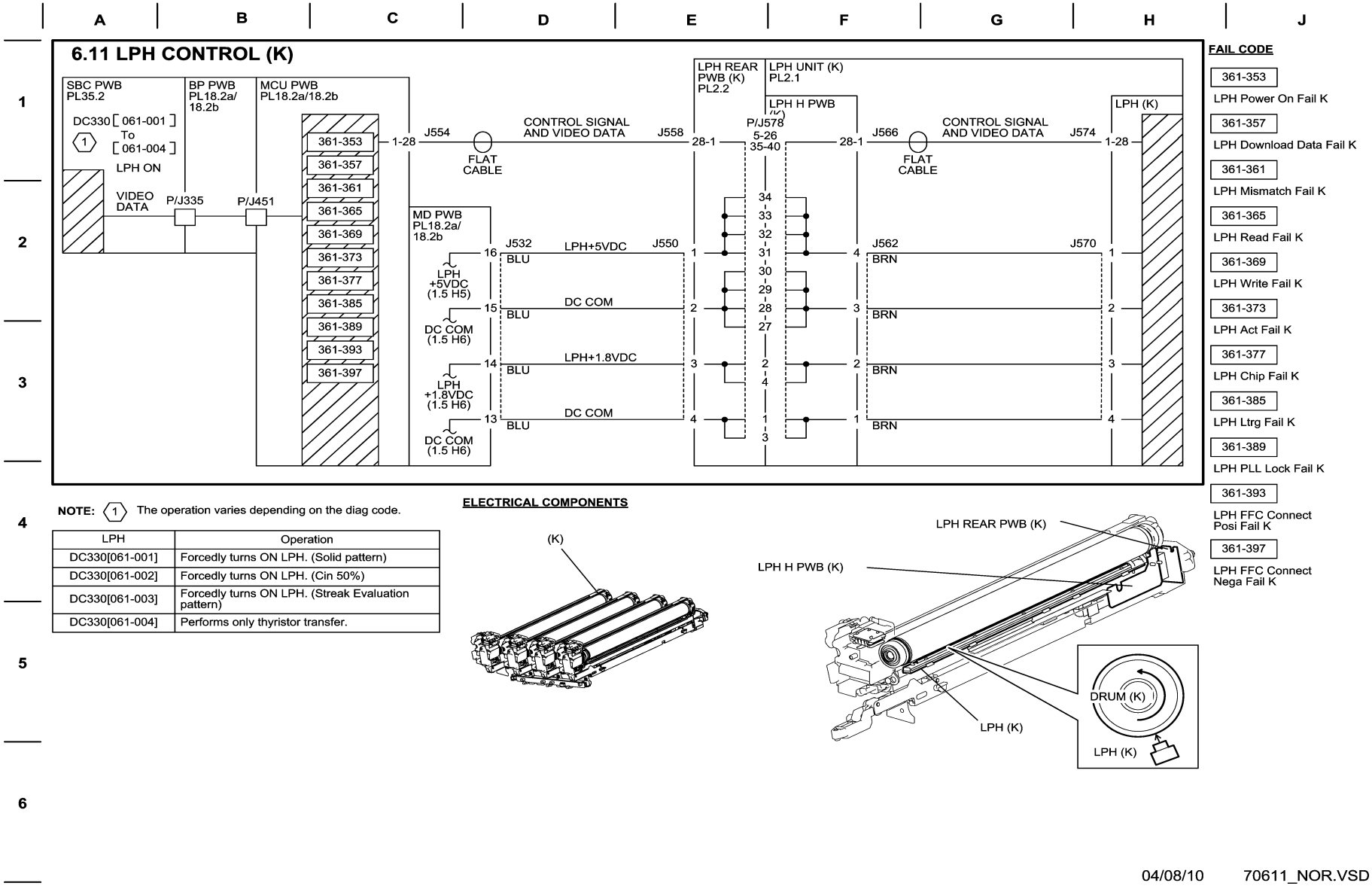

LPH	Operation
DC330[061-001]	Forcedly turns ON LPH. (Solid pattern)
DC330[061-002]	Forcedly turns ON LPH. (Cin 50%)
DC330[061-003]	Forcedly turns ON LPH. (Streak Evaluation pattern)
DC330[061-004]	Performs only thyristor transfer.

Figure 11 BSD 6.11 LPH Control (K)

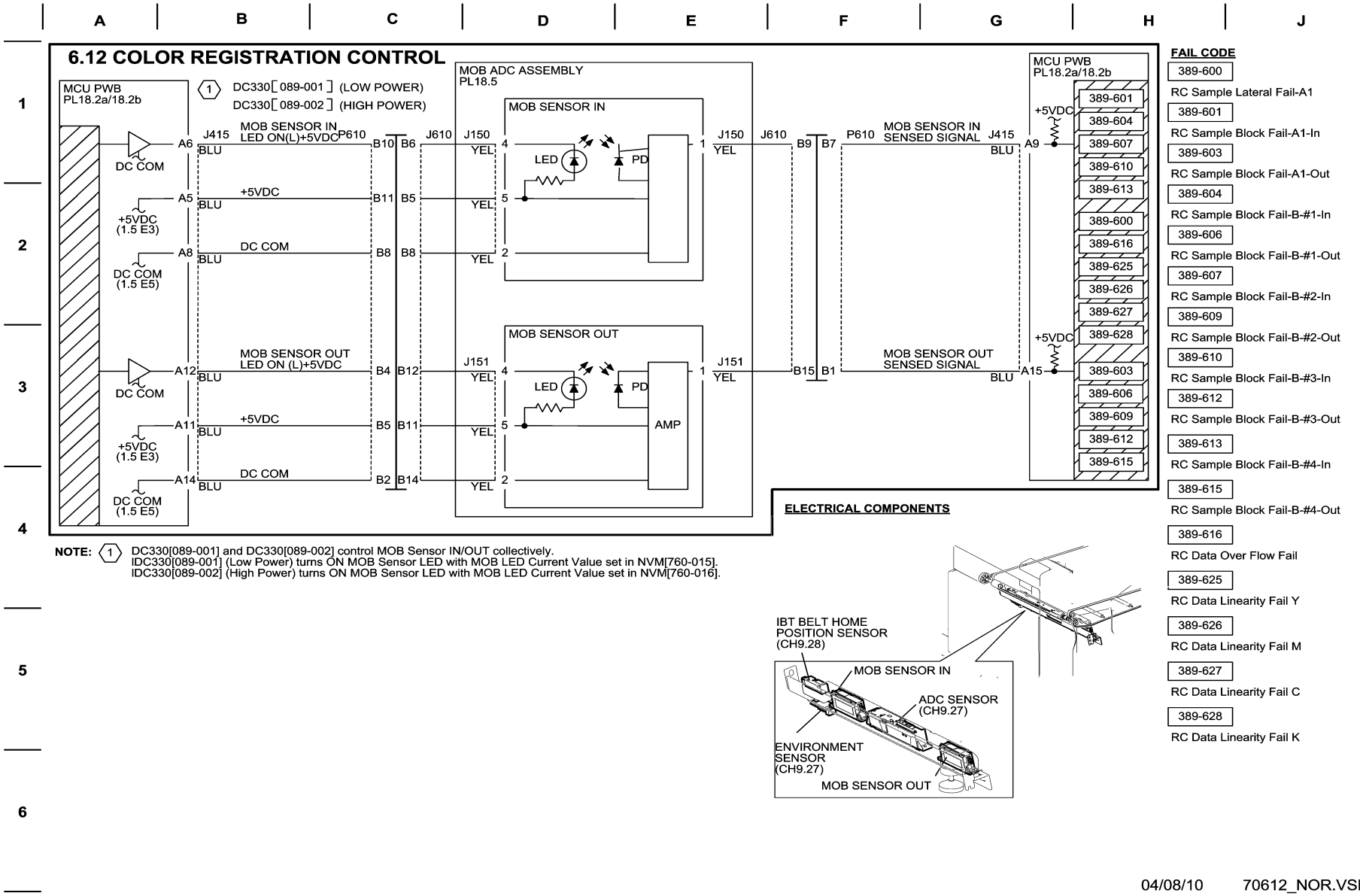

Figure 12 BSD 6.12 Color Registration Control

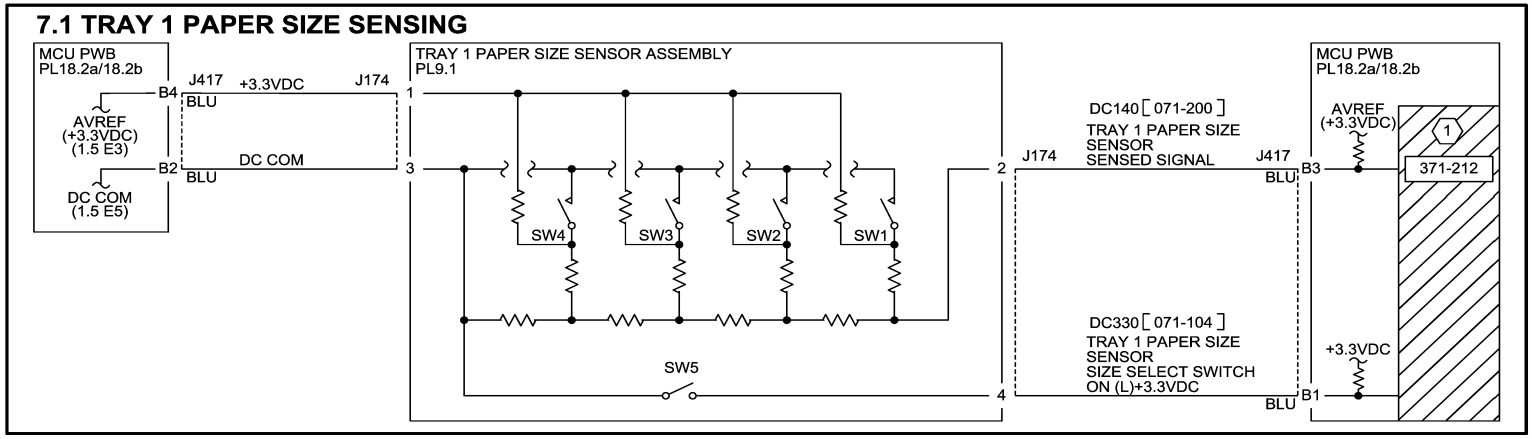

FAULT CODE

371-212

Tray 1 Paper Size Sensor Broken

NOTE: (1) Paper size is sensed by voltage corresponding to combined resistance of Paper Size Sensor and SW5 On/Off. The table below shows the relation between paper size and combination of Switch ON/OFF pattern, voltage and AD value. (Any combination other than the ones below results in an undetermined size.)

Paper Size	SW1	SW2	SW3	SW4	SW5	Voltage (V) (J417-B3)	AD Value DC140[071-200]
No Tray	OFF	OFF	OFF	OFF	OFF	3.085±0.066	922-989
A5S/5.5"X8.5"S (*1)	OFF	OFF	ON	OFF	OFF	2.671±0.066	797-857
B5S	OFF	OFF	ON	ON	ON	2.468±0.066	735-796
8.5"X13"S	OFF	ON	OFF	ON	OFF	2.064±0.066	610-671
8.5"X14"S	OFF	ON	OFF	ON	ON		
A4S	OFF	ON	ON	OFF	OFF	1.864±0.066	548-609
8.5"X11"S	OFF	ON	ON	OFF	ON		
A4L	ON	OFF	ON	OFF	OFF	1.079±0.066	304-365
A3S	ON	OFF	ON	ON	OFF	0.881±0.066	244-303
B5L/7.25"X10.5"L(*1)	ON	ON	OFF	OFF	ON	0.691±0.066	184-243
8KS(*2)	ON	ON	OFF	ON	OFF	0.493±0.066	124-183
B4S	ON	ON	OFF	ON	ON		
8.5"X11"L	ON	ON	ON	OFF	OFF	0.300±0.066	64-123
16KL(*2)/7.25"X10.5"L(*1)	ON	ON	ON	OFF	ON		
11"X17"S	ON	ON	ON	ON	ON	0.106±0.066	0-63

*1: Paper size is changed in diag.
*2: System Setting enables switching between GCO and TFX sizes.

ELECTRICAL COMPONENTS

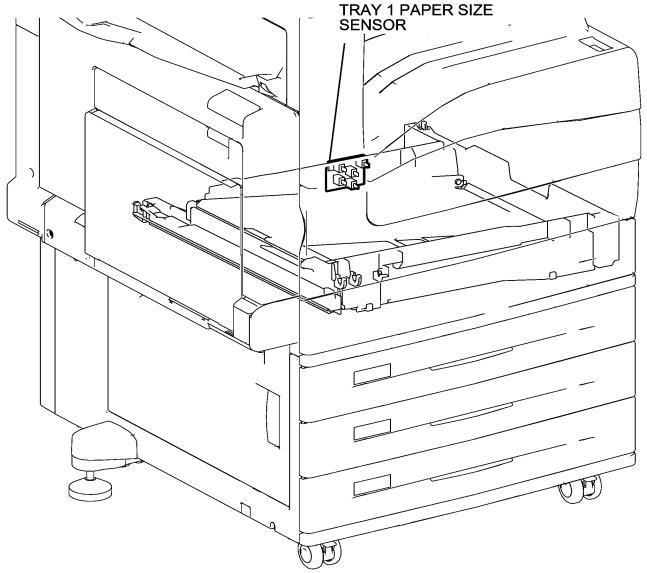

05/17/10 70701_NOR.VSD

Figure 1 BSD 7.1 Tray 1 Paper Size Sensing

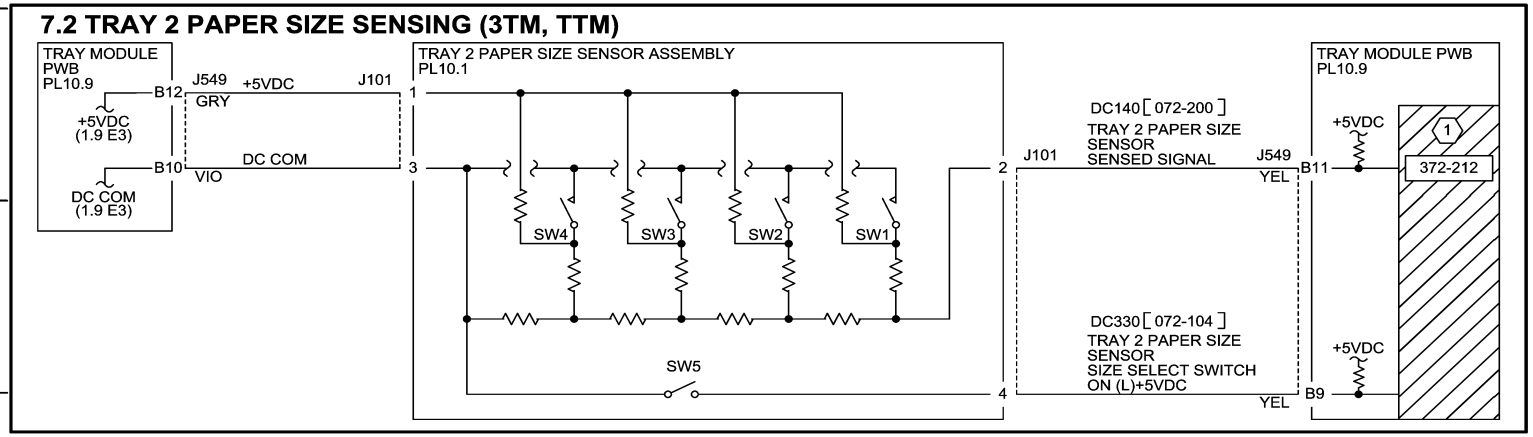

FAULT CODE

372-212

Tray 2 Paper Size Sensor Broken

NOTE: (1) Paper size is sensed by voltage corresponding to combined resistance of Paper Size Sensor and SW5 On/Off. The table below shows the relation between paper size and combination of Switch ON/OFF pattern, voltage and AD value. (Any combination other than the ones below results in an undetermined size.)

Paper Size	SW1	SW2	SW3	SW4	SW5	Voltage (V) (J549-B11)	AD Value DC140[072-200]
No Tray	OFF	OFF	OFF	OFF	OFF	4.66±0.03	237-247
A5S/5.5"X8.5"S (*1)	OFF	OFF	ON	OFF	OFF	4.01±0.03	199-214
B5S	OFF	OFF	ON	ON	ON	3.69±0.03	184-198
8.5"X13"S	OFF	ON	OFF	ON	OFF	3.07±0.03	153-167
8.5"X14"S	OFF	ON	OFF	ON	ON		
A4S	OFF	ON	ON	OFF	OFF	2.75±0.03	137-152
8.5"X11"S	OFF	ON	ON	OFF	ON		
8"X10"S	OFF	ON	ON	ON	ON	2.44±0.03	122-136
12.6"X19.2"S/13"X19"S(*1)	ON	OFF	OFF	OFF	ON	2.15±0.03	107-121
SRA3 S/13"X18"S/2"X18"S(*1)	ON	OFF	OFF	ON	ON	1.83±0.03	92-106
A4L	ON	OFF	ON	OFF	OFF	1.52±0.03	77-91
A3S	ON	OFF	ON	ON	OFF	1.21±0.03	61-76
B5L/7.25"X10.5"L(*1)	ON	ON	OFF	OFF	ON	0.91±0.03	46-60
8KS(*2)	ON	ON	OFF	ON	OFF	0.60±0.03	31-45
B4S	ON	ON	OFF	ON	ON		
8.5"X11"L	ON	ON	ON	OFF	OFF	0.30±0.03	16-30
16KL(*2)/7.25"X10.5"L(*1)	ON	ON	ON	OFF	ON		
11"X17"S	ON	ON	ON	ON	ON	0.00±0.03	0-15

*1: Paper size is changed in diag.
*2: System Setting enables switching between GCO and TFX sizes.

ELECTRICAL COMPONENTS

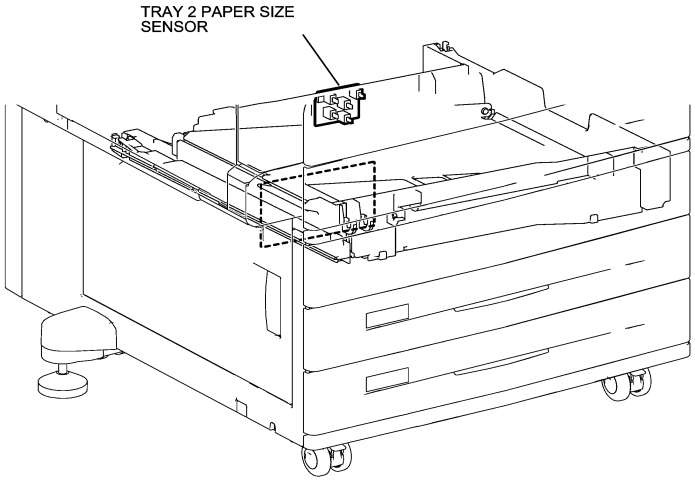

05/17/10 70702_NOR.VSD

Figure 2 BSD 7.2 Tray 2 Paper Size Sensing

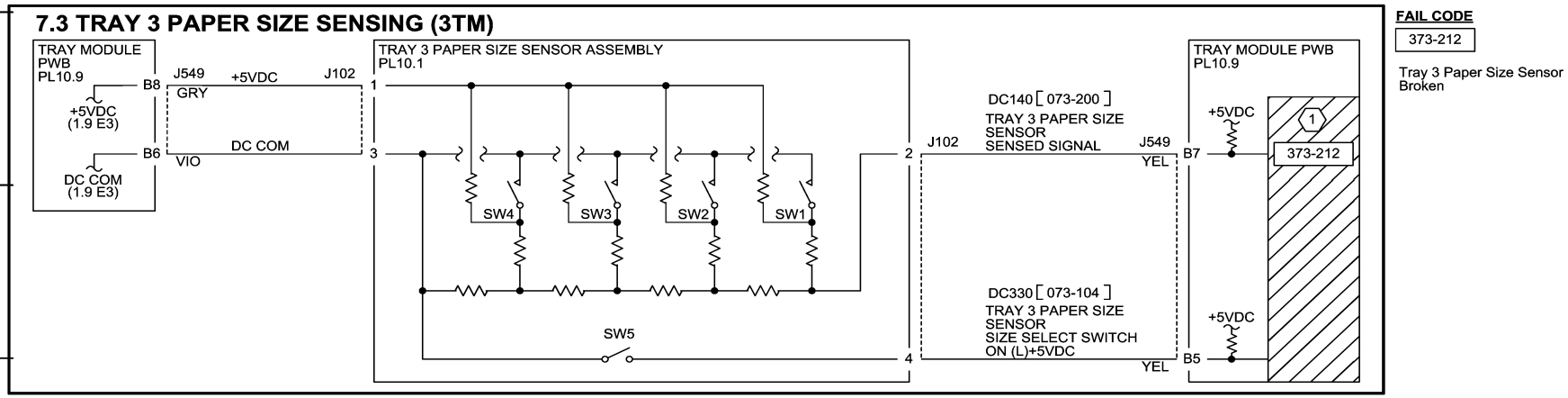

NOTE: (1) Paper size is sensed by voltage corresponding to combined resistance of Paper Size Sensor and SW5 On/Off.
The table below shows the relation between paper size and combination of Switch ON/OFF pattern, voltage and AD value.
(Any combination other than the ones below results in an undetermined size.)

Paper Size	SW1	SW2	SW3	SW4	SW5	Voltage (V) (J549-B7)	AD Value DC140[073-200]
No Tray	OFF	OFF	OFF	OFF	OFF	4.66±0.03	237-247
A5S/5.5"X8.5"S (*1)	OFF	OFF	ON	OFF	OFF	4.01±0.03	199-214
B5S	OFF	OFF	ON	ON	ON	3.69±0.03	184-198
8.5"X13"S	OFF	ON	OFF	ON	OFF	3.07±0.03	153-167
8.5"X14"S	OFF	ON	OFF	ON	ON		
A4S	OFF	ON	ON	OFF	OFF	2.75±0.03	137-152
8.5"X11"S	OFF	ON	ON	OFF	ON		
8"X10"S	OFF	ON	ON	ON	ON	2.44±0.03	122-136
12.6"X19.2"S/13"X19"S(*1)	ON	OFF	OFF	OFF	ON	2.15±0.03	107-121
SRA3 S/13"X18"S/2"X18"S(*1)	ON	OFF	OFF	ON	ON	1.83±0.03	92-106
A4L	ON	OFF	ON	OFF	OFF	1.52±0.03	77-91
A3S	ON	OFF	ON	ON	OFF	1.21±0.03	61-76
B5L/7.25"X10.5"L(*1)	ON	ON	OFF	OFF	ON	0.91±0.03	46-60
8KS(*2)	ON	ON	OFF	ON	OFF	0.60±0.03	31-45
B4S	ON	ON	OFF	ON	ON		
8.5"X11"L	ON	ON	ON	OFF	OFF	0.30±0.03	16-30
16KL(*2)/7.25"X10.5"L(*1)	ON	ON	ON	OFF	ON		
11"X17"S	ON	ON	ON	ON	ON	0.00±0.03	0-15

*1: Paper size is changed in diag.
*2: System Setting enables switching between GCO and TFX sizes.

ELECTRICAL COMPONENTS

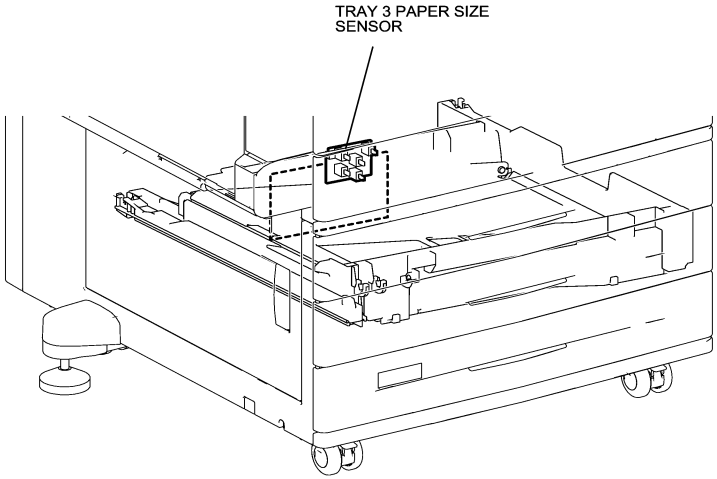

05/10/10 70703_NOR.VSD

Figure 3 BSD 7.3 Tray 3 Paper Size Sensing

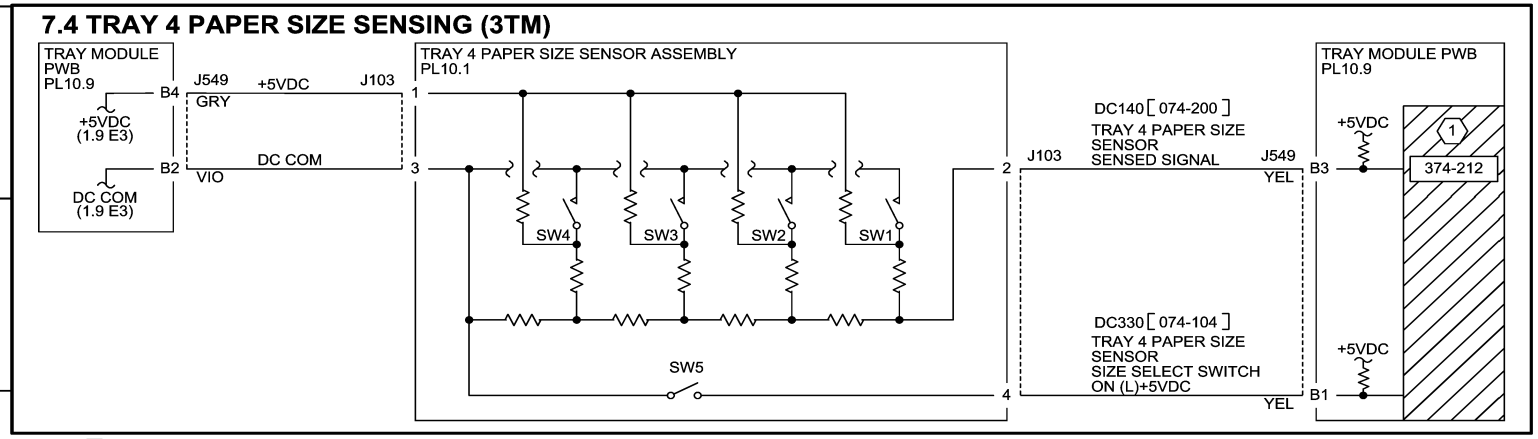

FAULT CODE

374-212

Tray 4 Paper Size Sensor Broken

NOTE: (1) Paper size is sensed by voltage corresponding to combined resistance of Paper Size Sensor and SW5 On/Off.
The table below shows the relation between paper size and combination of Switch ON/OFF pattern, voltage and AD value.
(Any combination other than the ones below results in an undetermined size.)

Paper Size	SW1	SW2	SW3	SW4	SW5	Voltage (V) (J549-B3)	AD Value DC140[074-200]
No Tray	OFF	OFF	OFF	OFF	OFF	4.66±0.03	237-247
A5S/5.5"X8.5"S (*1)	OFF	OFF	ON	OFF	OFF	4.01±0.03	199-214
B5S	OFF	OFF	ON	ON	ON	3.69±0.03	184-198
8.5"X13"S	OFF	ON	OFF	ON	OFF	3.07±0.03	153-167
8.5"X14"S	OFF	ON	OFF	ON	ON		
A4S	OFF	ON	ON	OFF	OFF	2.75±0.03	137-152
8.5"X11"S	OFF	ON	ON	OFF	ON		
8"X10"S	OFF	ON	ON	ON	ON	2.44±0.03	122-136
12.6"X19.2"S/13"X19"S(*1)	ON	OFF	OFF	OFF	ON	2.15±0.03	107-121
SRA3 S/13"X18"S/2"X18"S(*1)	ON	OFF	OFF	ON	ON	1.83±0.03	92-106
A4L	ON	OFF	ON	OFF	OFF	1.52±0.03	77-91
A3S	ON	OFF	ON	ON	OFF	1.21±0.03	61-76
B5L/7.25"X10.5"L(*1)	ON	ON	OFF	OFF	ON	0.91±0.03	46-60
8KS(*2)	ON	ON	OFF	ON	OFF	0.60±0.03	31-45
B4S	ON	ON	OFF	ON	ON		
8.5"X11"L	ON	ON	ON	OFF	OFF	0.30±0.03	16-30
16KL(*2)/7.25"X10.5"L(*1)	ON	ON	ON	OFF	ON		
11"X17"S	ON	ON	ON	ON	ON	0.00±0.03	0-15

*1: Paper size is changed in diag.
*2: System Setting enables switching between GCO and TFX sizes.

ELECTRICAL COMPONENTS

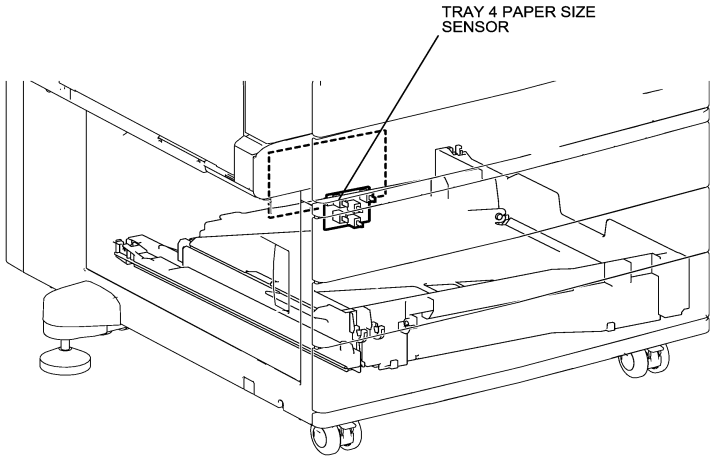

05/17/10 70704_NOR.VSD

Figure 4 BSD 7.4 Tray 4 Paper Size Sensing

BSD 7.5 Tray 5 (MSI) Paper Size Sensing

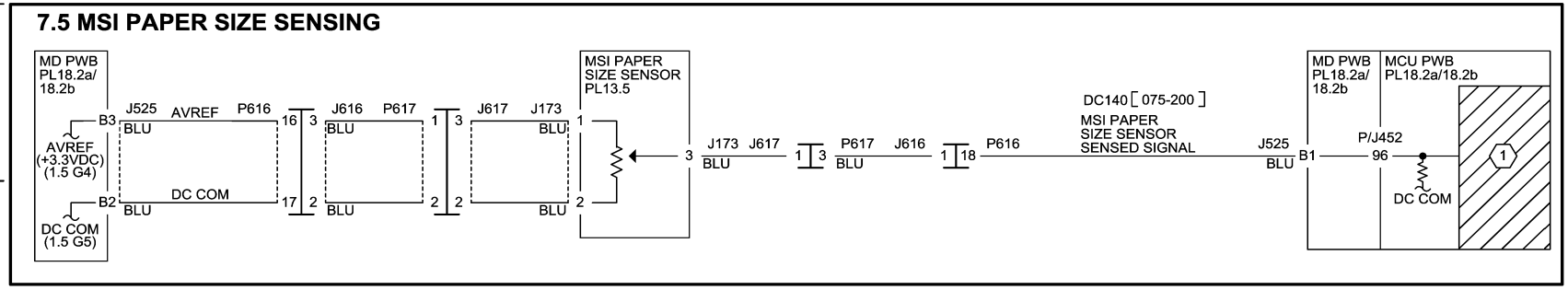

NOTE: (1) Paper width (size in fast scan direction) is sensed by voltage corresponding to MSI Paper Size Sensor resistance.As to MSI, AD values corresponding to paper sizes (widths) vary depending on the machine because when MSI is installed on IOT before shipment, MSI Size Sensing is adjusted in the diag. The values below are for reference.

Paper Size	Voltage (V) (J525-B1)	AD Value DC140[075-200]
Post Card S	2.676-2.732	824.958-851.600
5.5"X8.5"S	2.246-2.302	691.590-718.233
A5S	2.156-2.212	663.708-690.350
B5S	1.788-1.843	549.488-576.131
8"X10"S	1.636-1.692	502.457-529.099
8.5"X11"S(Letter)&X13"&X14"	1.503-1.559	461.304-487.947
A4S	1.484-1.540	455.425-482.068
7.25"X10.5"L	0.972-1.028	296.694-323.337
B5L	0.975-1.031	297.534-324.176
B4S		
16KL(Taiwan)	0.867-0.922	263.940-290.583
8KS(Taiwan)		
16KL(Mainland China)	0.834-0.890	253.862-280.504
8 KL(Mainland China)		
11"X17"S	0.732-0.788	222.284-248.926
8.5"X11"L(Letter)		
A4L	0.541-0.597	163.159-189.801
A3S		
12.6"X19.2"S	0.415-0.470	123.854-150.496
13"X19"(X18")	0.308-0.364	90.932-117.574
SRA3	0.292-0.348	85.893-112.535

Ref Paper length (size in slow scan direction) is sensed by measuring how long paper takes to pass Regi. Sensor.

ELECTRICAL COMPONENTS

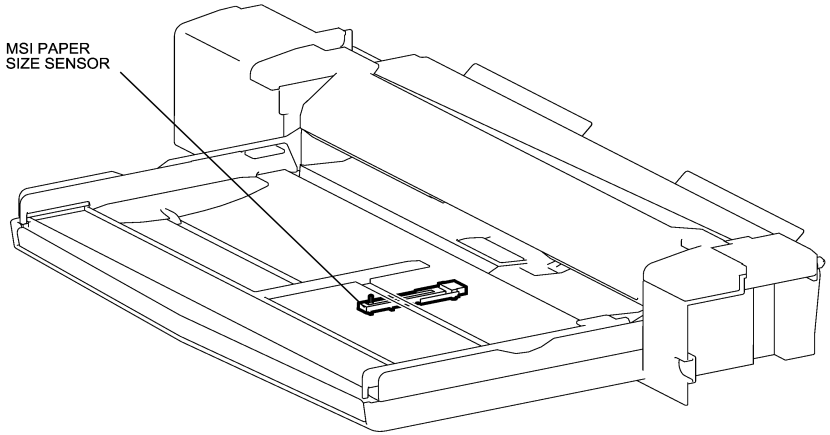

04/22/10 70705_NOR.VSD

Figure 5 BSD 7.5 Tray 5 (MSI) Paper Size Sensing

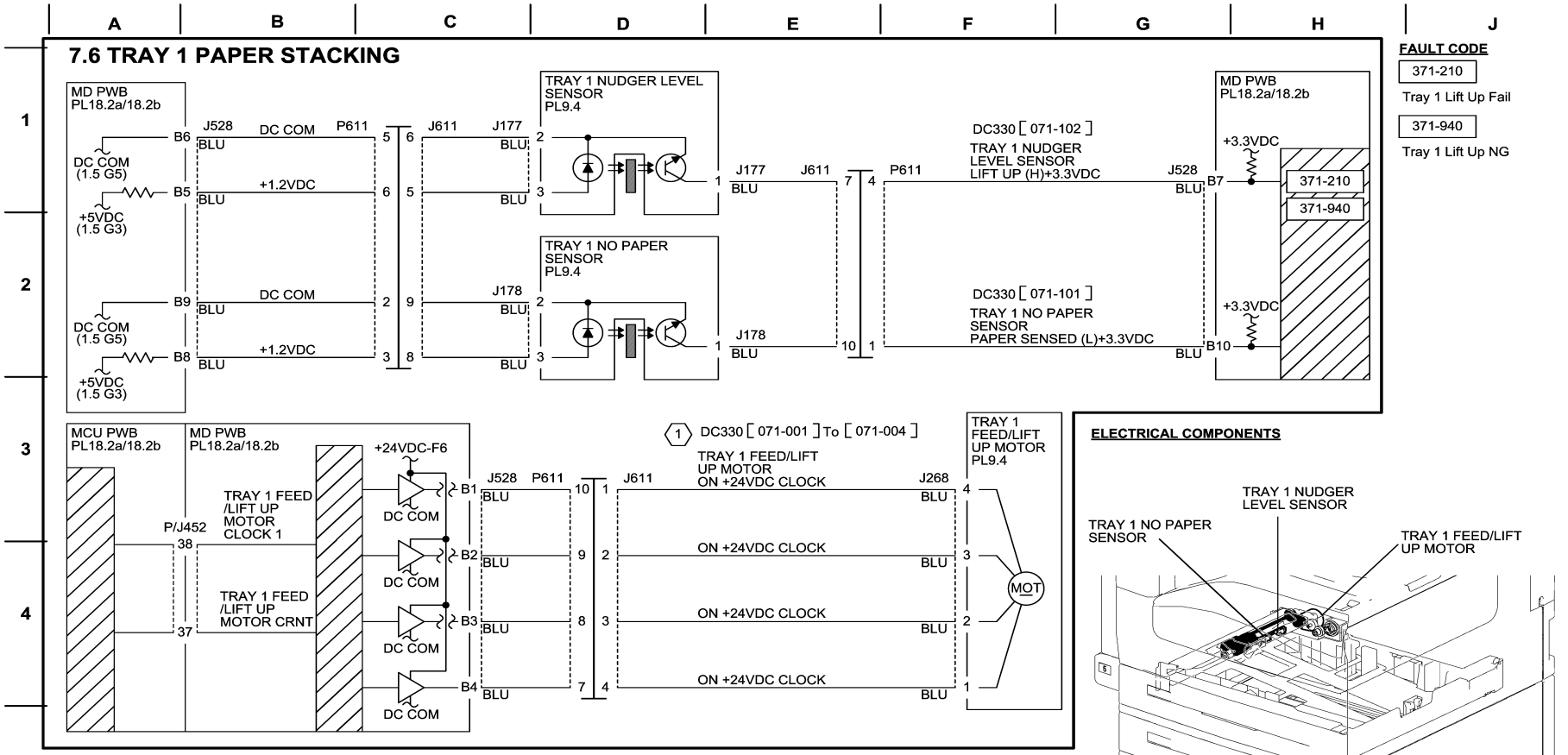

NOTE: (1) The operation varies depending on the diag code.

TRAY 1 FEED/ LIFT UP MOTOR	Operation
DC330 [071-001]	Rotates the Motor forward. (in the Feed direction. 2-phase excitation)
DC330 [071-002]	Rotates the Motor reverse. (in the Lift-up direction. 2-phase excitation)The motor makes the tray lift up, and after Level Sensor turns ON it steps down and finishes the operation. However, if Level Sensor is ON when the motor starts driving, it does not operate.
DC330 [071-003]	Rotates the Motor forward. (in the Feed direction. 1-2-phase excitation)
DC330 [071-004]	Rotates the Motor reverse. (in the Lift-up direction. 1-2-phase excitation)The motor makes the tray lift up, and after Level Sensor turns ON it steps down and finishes the operation. However, if Level Sensor is ON when the motor starts driving, it does not operate.

05/17/10 70706_NOR.VSD

Figure 6 BSD 7.6 Tray 1 Paper Stacking

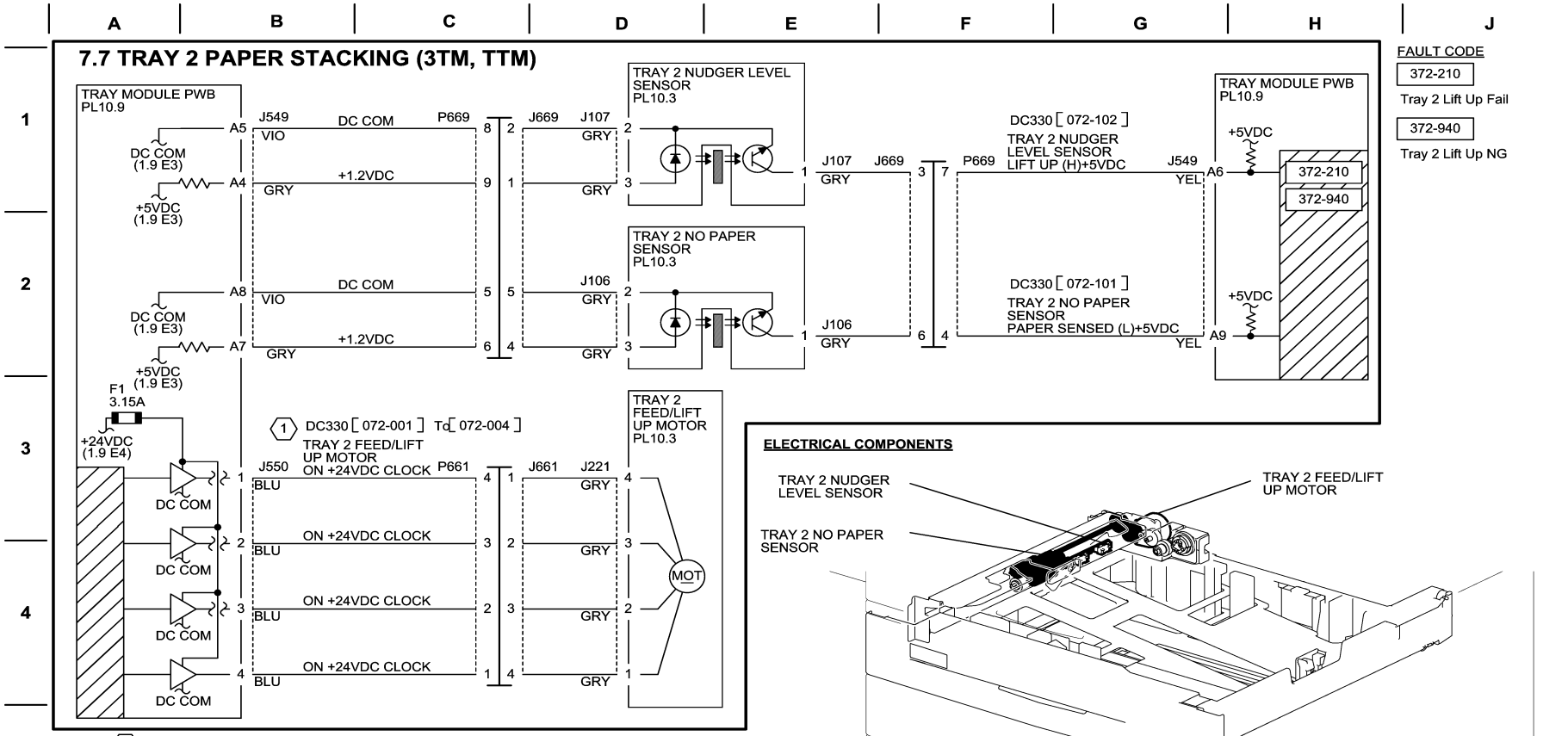

NOTE: (1) The operation varies depending on the diag code.

TRAY 2 FEED/ LIFT UP MOTOR	Operation
DC330 [072-001]	Rotates the Motor forward. (in the Feed direction. 2-phase excitation)
DC330 [072-002]	Rotates the Motor reverse. (in the Lift-up direction. 2-phase excitation)The motor makes the tray lift up, and after Level Sensor turns ON it steps down and finishes the operation. However, if Level Sensor is ON when the motor starts driving, it does not operate.
DC330 [072-003]	Rotates the Motor forward. (in the Feed direction. 1-2-phase excitation)
DC330 [072-004]	Rotates the Motor reverse. (in the Lift-up direction. 1-2-phase excitation)The motor makes the tray lift up, and after Level Sensor turns ON it steps down and finishes the operation. However, if Level Sensor is ON when the motor starts driving, it does not operate.

Figure 7 BSD 7.7 Tray 2 Paper Stacking

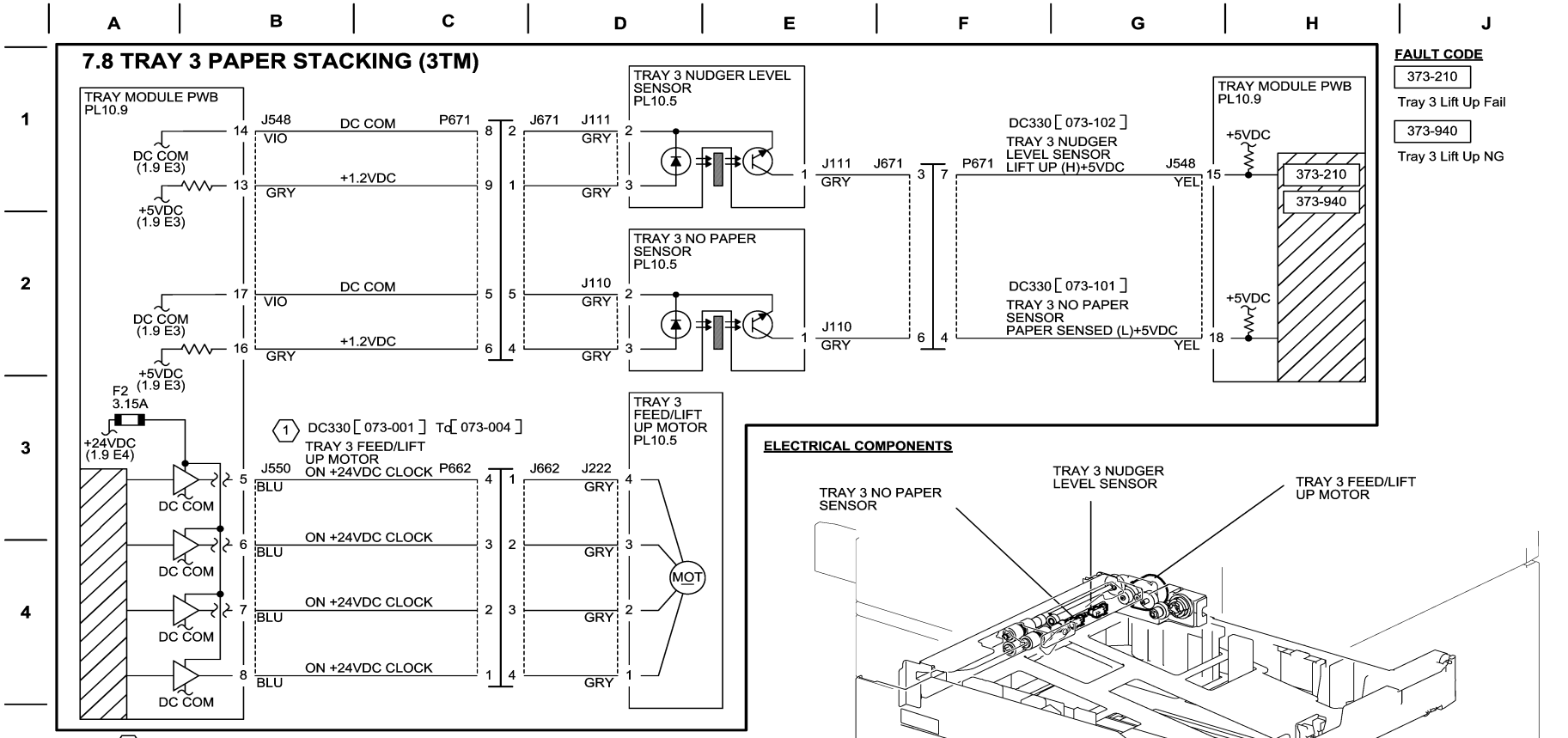

NOTE: (1) The operation varies depending on the diag code.

TRAY 3 FEED/ LIFT UP MOTOR	Operation
DC330 [073-001]	Rotates the Motor forward. (in the Feed direction. 2-phase excitation)
DC330 [073-002]	Rotates the Motor reverse. (in the Lift-up direction. 2-phase excitation)The motor makes the tray lift up, and after Level Sensor turns ON it steps down and finishes the operation. However, if Level Sensor is ON when the motor starts driving, it does not operate.
DC330 [073-003]	Rotates the Motor forward. (in the Feed direction. 1-2-phase excitation)
DC330 [073-004]	Rotates the Motor reverse. (in the Lift-up direction. 1-2-phase excitation)The motor makes the tray lift up, and after Level Sensor turns ON it steps down and finishes the operation. However, if Level Sensor is ON when the motor starts driving, it does not operate.

05/17/10 70708_NOR.VSD

Figure 8 BSD 7.8 Tray 3 Paper Stacking

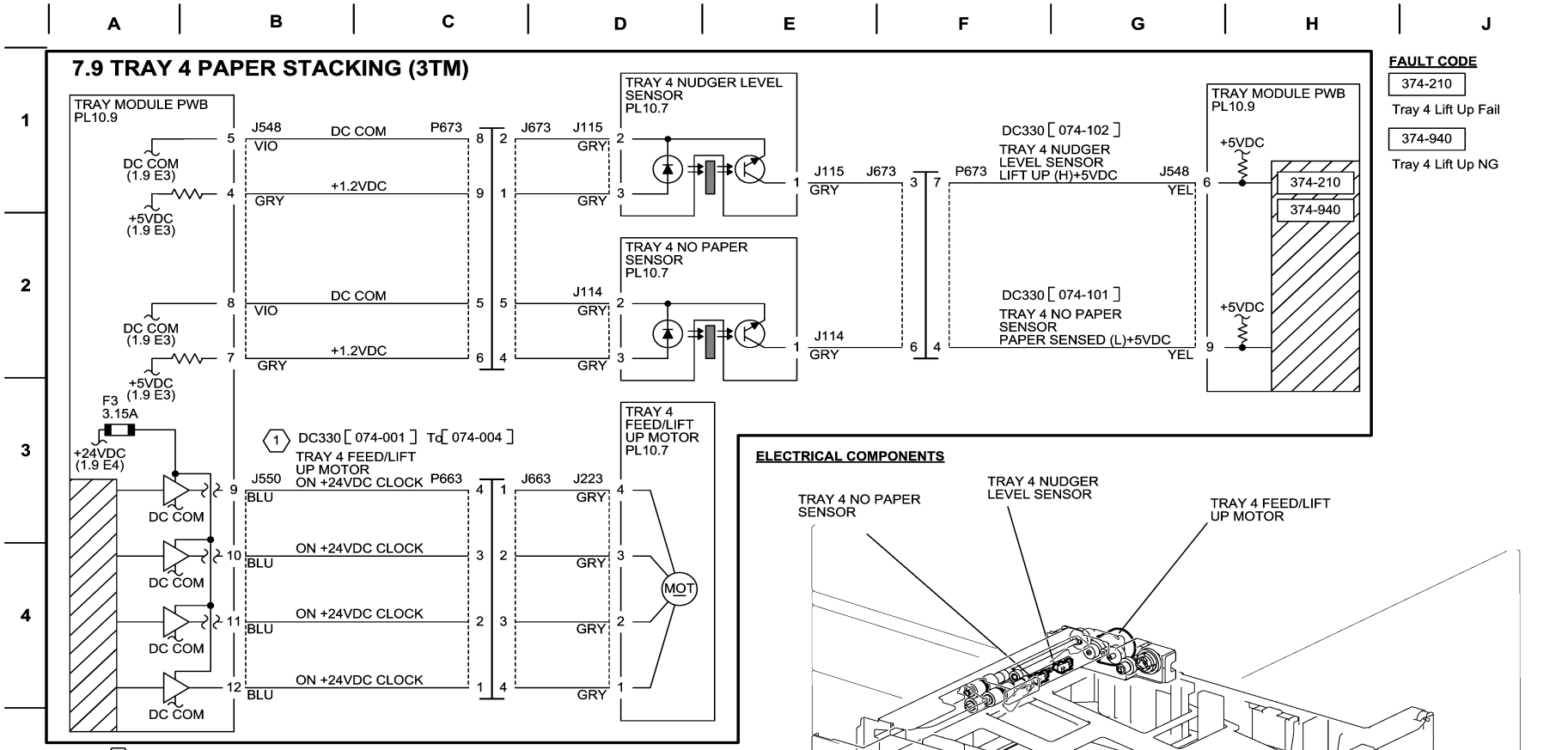

NOTE: (1) The operation varies depending on the diag code.

TRAY 4 FEED/ LIFT UP MOTOR	Operation
DC330 [074-001]	Rotates the Motor forward. (in the Feed direction. 2-phase excitation)
DC330 [074-002]	Rotates the Motor reverse. (in the Lift-up direction. 2-phase excitation)The motor makes the tray lift up, and after Level Sensor turns ON it steps down and finishes the operation. However, if Level Sensor is ON when the motor starts driving, it does not operate.
DC330 [074-003]	Rotates the Motor forward. (in the Feed direction. 1-2-phase excitation)
DC330 [074-004]	Rotates the Motor reverse. (in the Lift-up direction. 1-2-phase excitation)The motor makes the tray lift up, and after Level Sensor turns ON it steps down and finishes the operation. However, if Level Sensor is ON when the motor starts driving, it does not operate.

05/17/10 70709_NOR.VSD

Figure 9 BSD 7.9 Tray 4 Paper Stacking

7.10 MSI PAPER STACKING

FAULT CODE

375-212

MSI Nudger Up Down Fail

MD PWB PL18.2a/18.2b

T31 GR N T32

J525 B15 BLU DC COM P616 2 17 J616 J183 BLU

DC COM (1.5 G5)

J525 B14 BLU +1.2VDC 3 16 J183 BLU

+5VDC (1.5 G3)

MSI NUDGER POSITION SENSOR PL13.2

J183 BLU J616 18 1 P616

DC330 [075-102]
MSI NUDGER POSITION SENSOR BLOCKED (H)+3.3VDC

J525 BLU B16 +3.3VDC 375-212

J525 B8 BLU DC COM 11 8 J172 BLU

DC COM (1.5 G5)

J525 B7 BLU +1.2VDC 12 7 J172 BLU

+5VDC (1.5 G3)

MSI NO PAPER SENSOR PL13.4

J172 BLU 9 10

DC330 [075-101]
MSI NO PAPER SENSOR PAPER SENSED (L)+3.3VDC

BLU B9 +3.3VDC

MCU PWB PL18.2a/18.2b

MD PWB PL18.2a/18.2b

P/J452 38 MSI FEED/ NUDGER MOTOR CLOCK 1

37 MSI FEED/ NUDGER MOTOR CRNT

INTLK ON +24VDC-F8

B10 B11 B12 B13

J525 P616 BLU

(1) DC330 [075-001] To [075-004]

J616 9 10 MSI FEED/NUDGER MOTOR ON +24VDC CLOCK

8 11 ON +24VDC CLOCK

7 12 ON +24VDC CLOCK

6 13 ON +24VDC CLOCK

J269 BLU 4 3 2 1

MSI FEED/ NUDGER MOTOR PL13.2

MOT

ELECTRICAL COMPONENTS

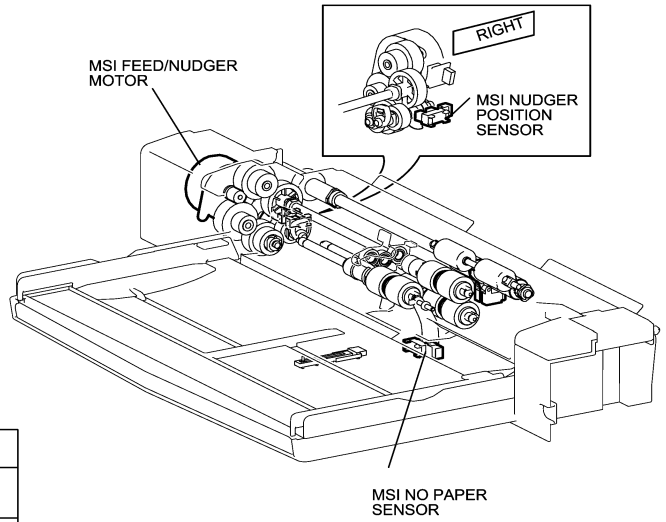

NOTE: (1) The operation varies depending on the diag code.

MSI FEED/ NUDGER MOTOR	Operation
DC330 [075-001]	Rotates the Motor forward. (in the Feed direction. 2-phase excitation)
DC330 [075-002]	Rotates the Motor reverse. (in the Nudger Up/Down direction. 2-phase excitation)

MSI FEED/ NUDGER MOTOR	Operation
DC330 [075-003]	Rotates the Motor forward. (in the Feed direction. 1-2-phase excitation)
DC330 [075-004]	Rotates the Motor reverse. (in the Nudger Up/Down direction. 1-2-phase excitation)

05/17/10 70710_NOR.VSD

Figure 10 BSD 7.10 Tray 5 (MSI) Paper Stacking

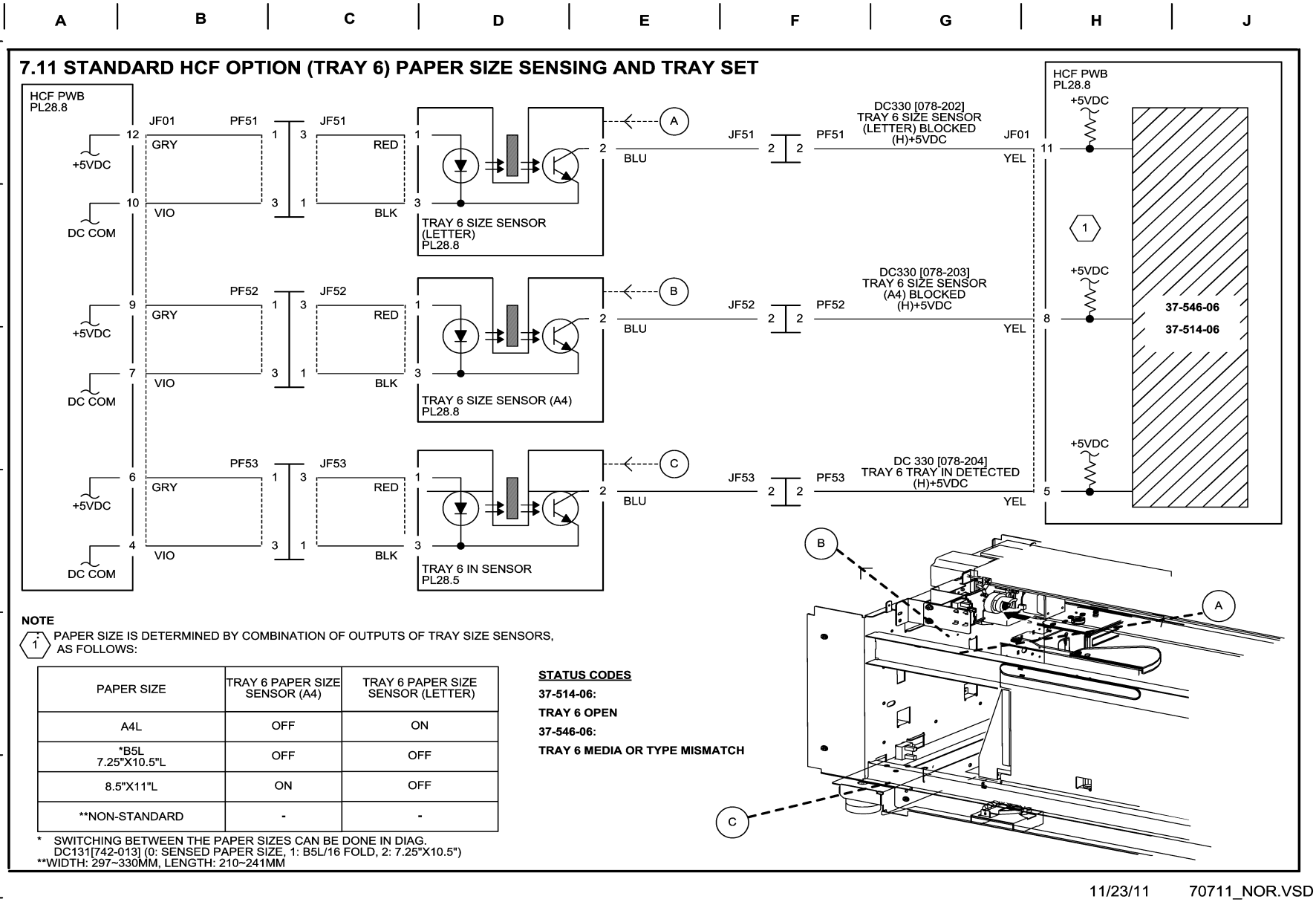

PAPER SIZE	TRAY 6 PAPER SIZE SENSOR (A4)	TRAY 6 PAPER SIZE SENSOR (LETTER)
A4L	OFF	ON
*B5L 7.25"X10.5"L	OFF	OFF
8.5"X11"L	ON	OFF
**NON-STANDARD	-	-

Figure 11 BSD 7.11 HCF Paper Size Sensing

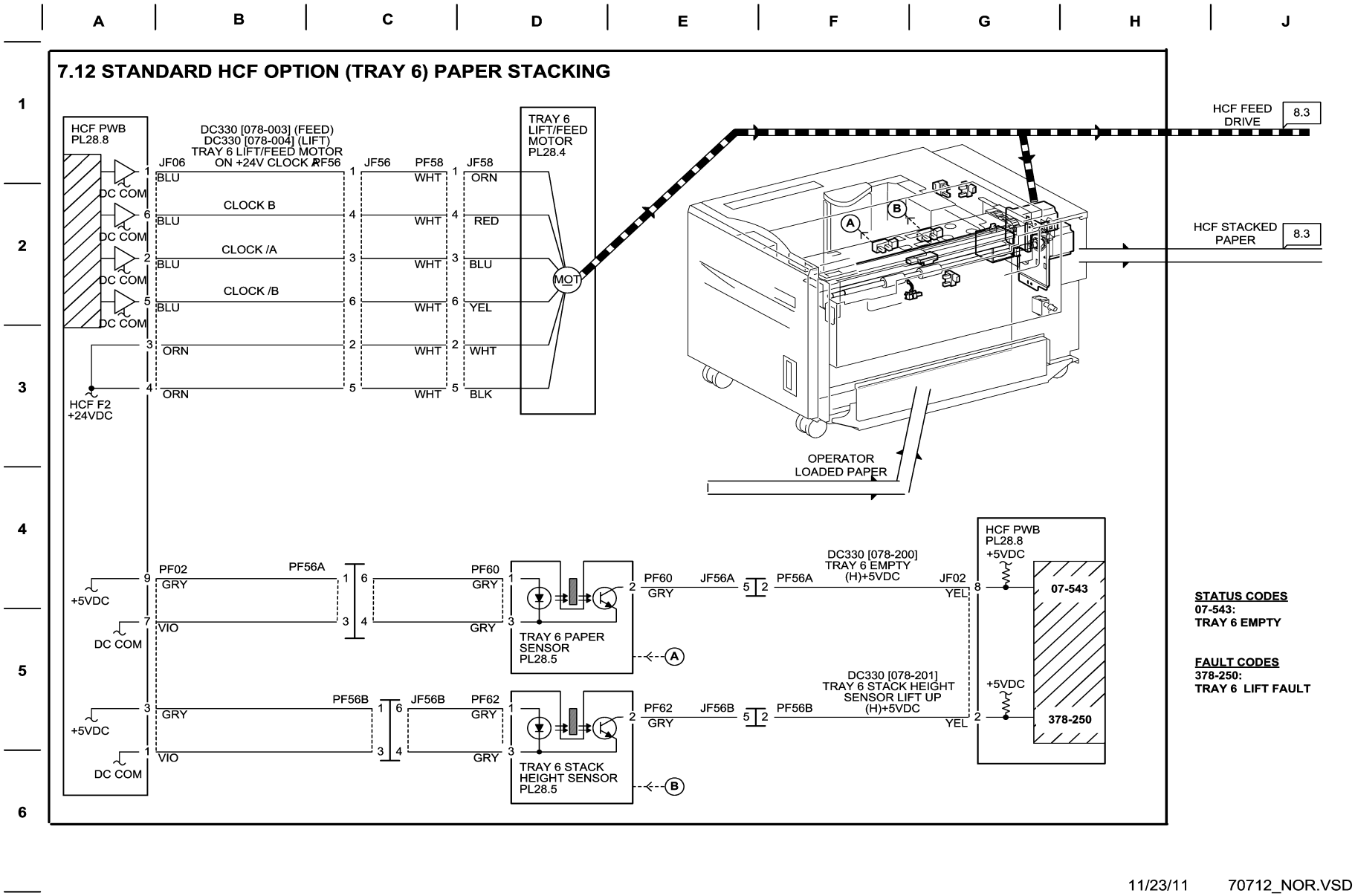

Figure 12 BSD 7.12 HCF Paper Stacking

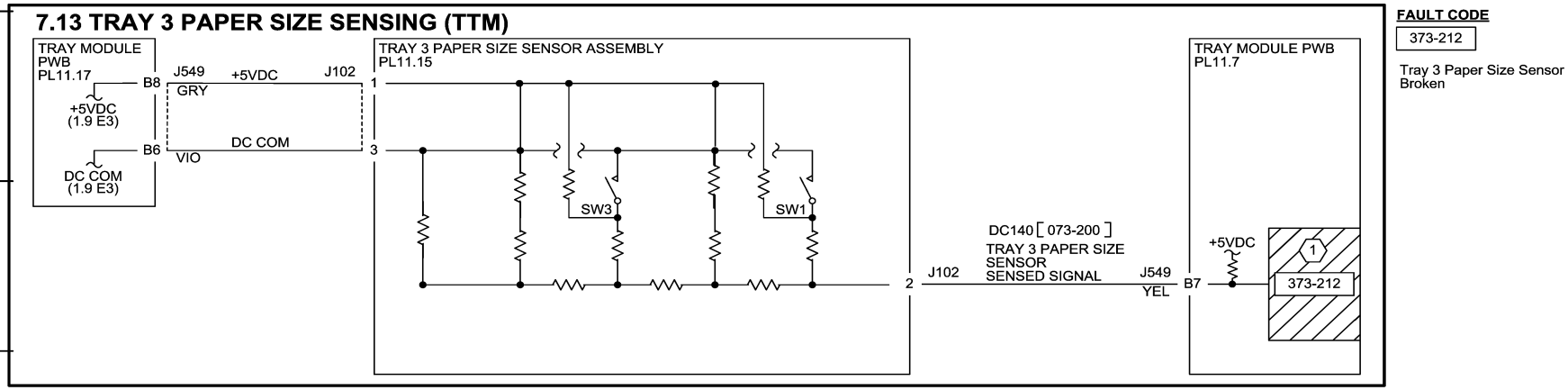

NOTE: (1)

Paper size is sensed by voltage corresponding to combined resistance of Paper Size Sensor.
The table below shows the relation between paper size and combination of Switch ON/OFF pattern, voltage and AD value.

Paper Size	SW1	SW3	Voltage (V) (J549-B7)	AD Value DC140[073-200]
No Tray	OFF	OFF	4.66±0.03	237-247
B5L/7.25"X10.5"L(*1)	OFF	ON	4.01±0.03	168-230
8.5"X11"L	ON	OFF	2.15±0.03	91-167
A4L	ON	ON	1.52±0.03	0-91

*1: Paper size is changed in diag.

ELECTRICAL COMPONENTS

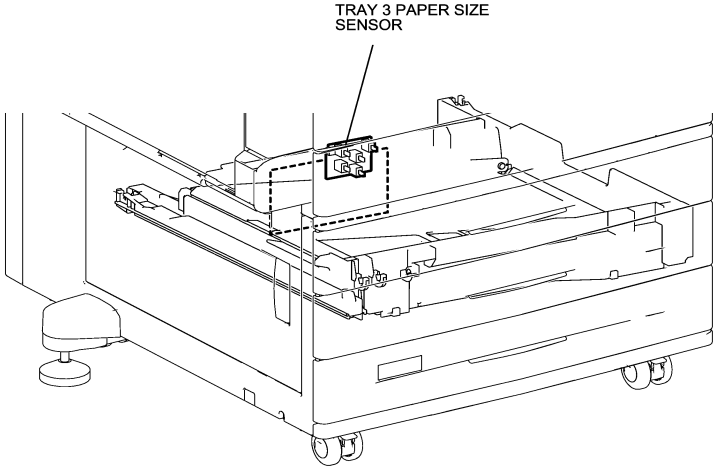

05/17/10 70713_NOR.VSD

Figure 13 BSD 7.13 Tray 3 Paper Size Sensing (TTM)

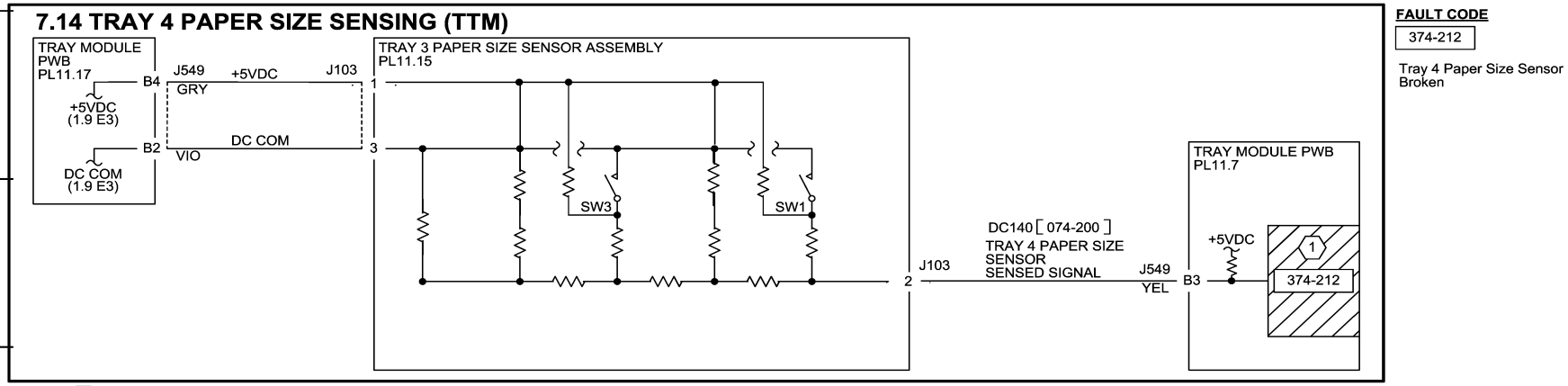

NOTE: (1)

Paper size is sensed by voltage corresponding to combined resistance of Paper Size Sensor.
The table below shows the relation between paper size and combination of Switch ON/OFF pattern, voltage and AD value.

Paper Size	SW1	SW3	Voltage (V) (J549-B7)	AD Value DC140[073-200]
No Tray	OFF	OFF	4.66±0.03	231-247
B5L/7.25"X10.5"L(*1)	OFF	ON	4.01±0.03	168-230
8.5"X11"L	ON	OFF	2.15±0.03	91-167
A4L	ON	ON	1.52±0.03	0-91

*1: Paper size is changed in diag.

ELECTRICAL COMPONENTS

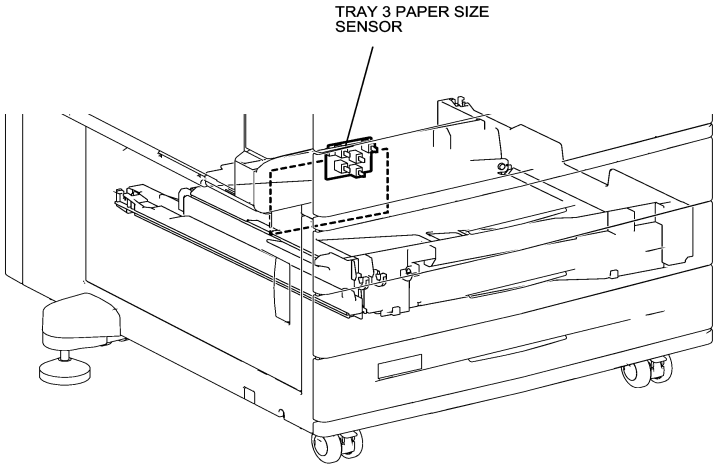

05/17/10 70714_NOR.VSD

Figure 14 BSD 7.14 Tray 4 Paper Size Sensing (TTM)

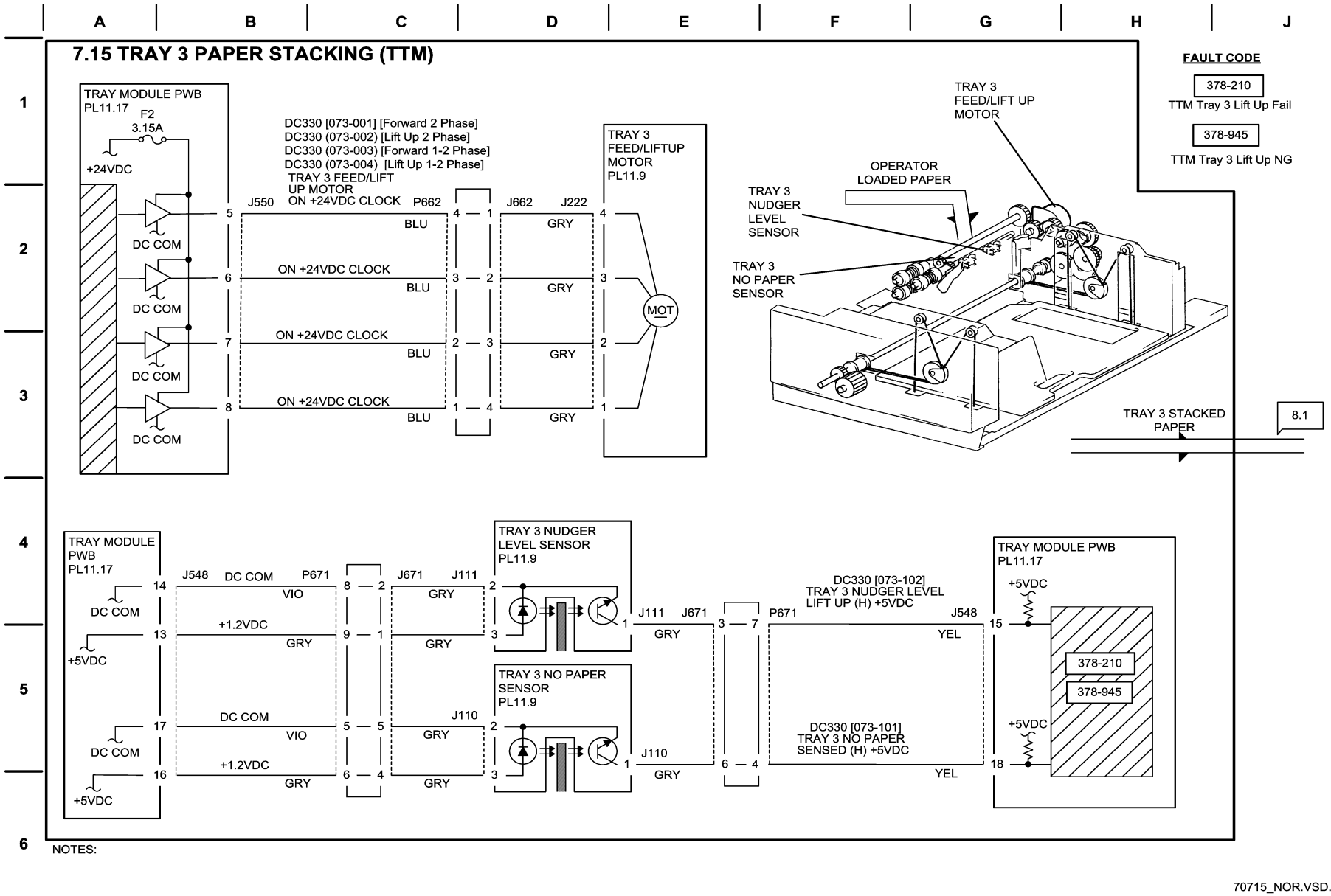

70715_NOR.VSD.

Figure 15 BSD 7.15 Tray 3 Paper Size Stacking (TTM)

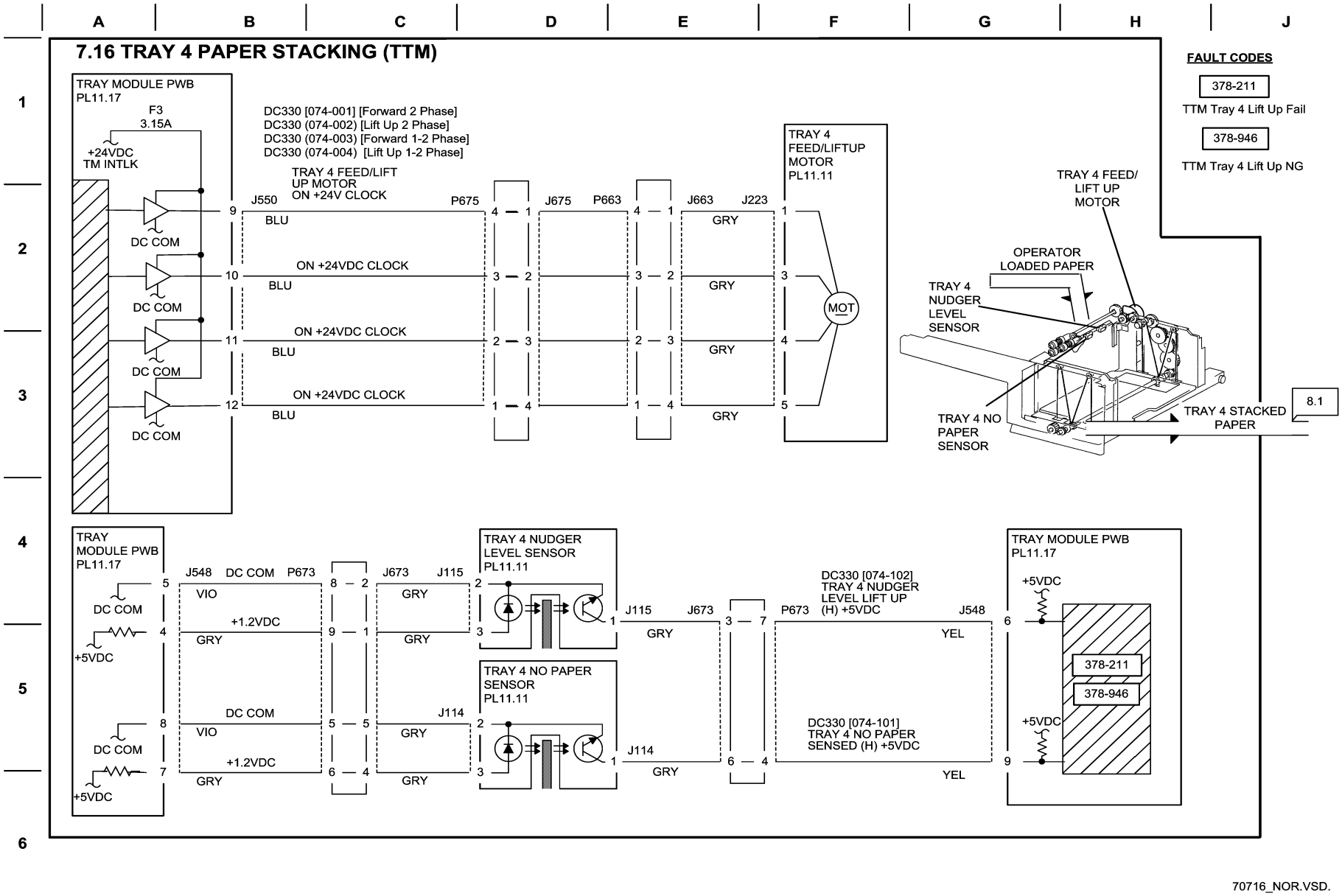

Figure 16 BSD 7.16 Tray 4 Paper Size Stacking (TTM)

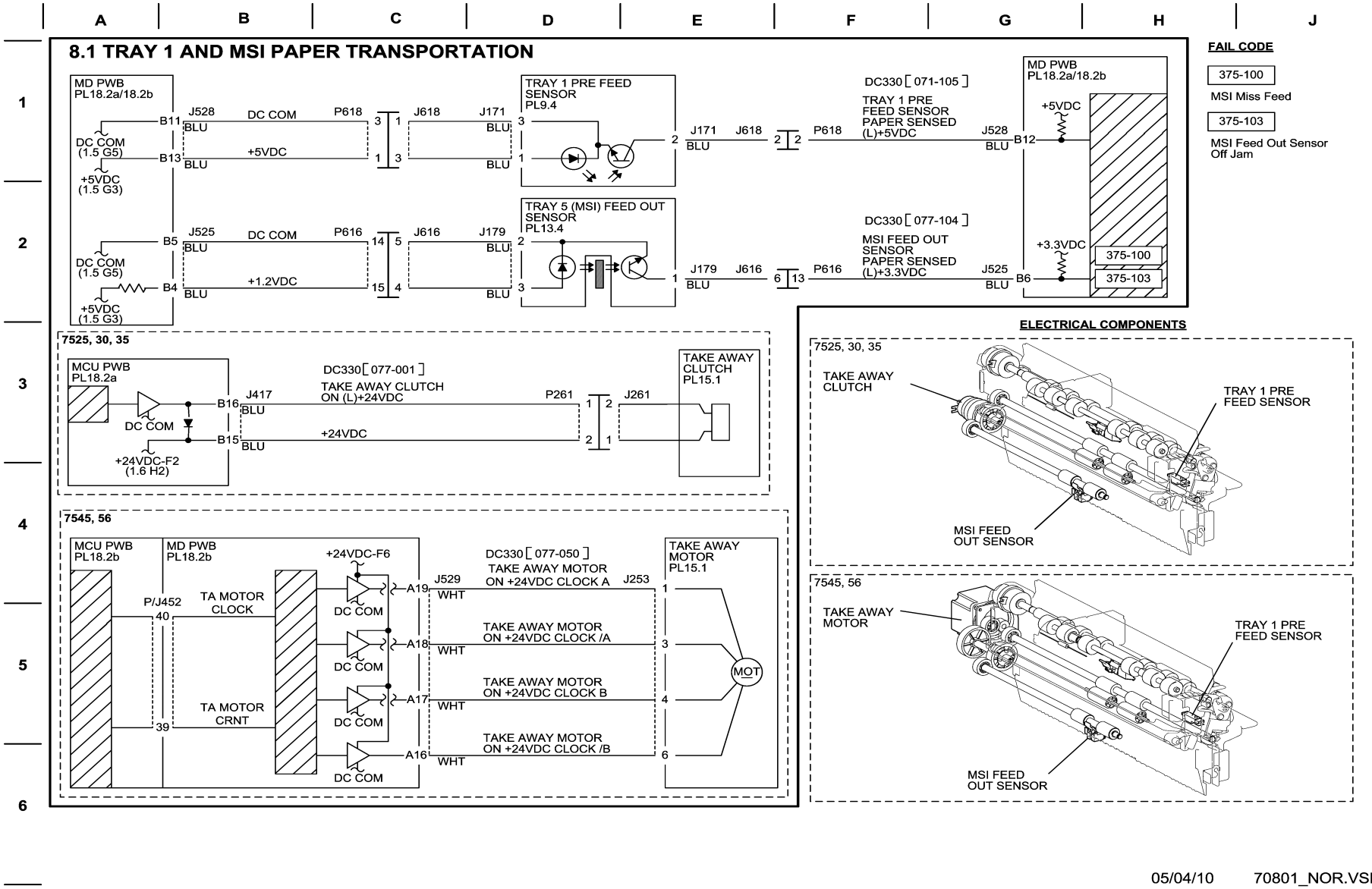

Figure 1 BSD 8.1 Tray 1 and MSI Paper Transportation

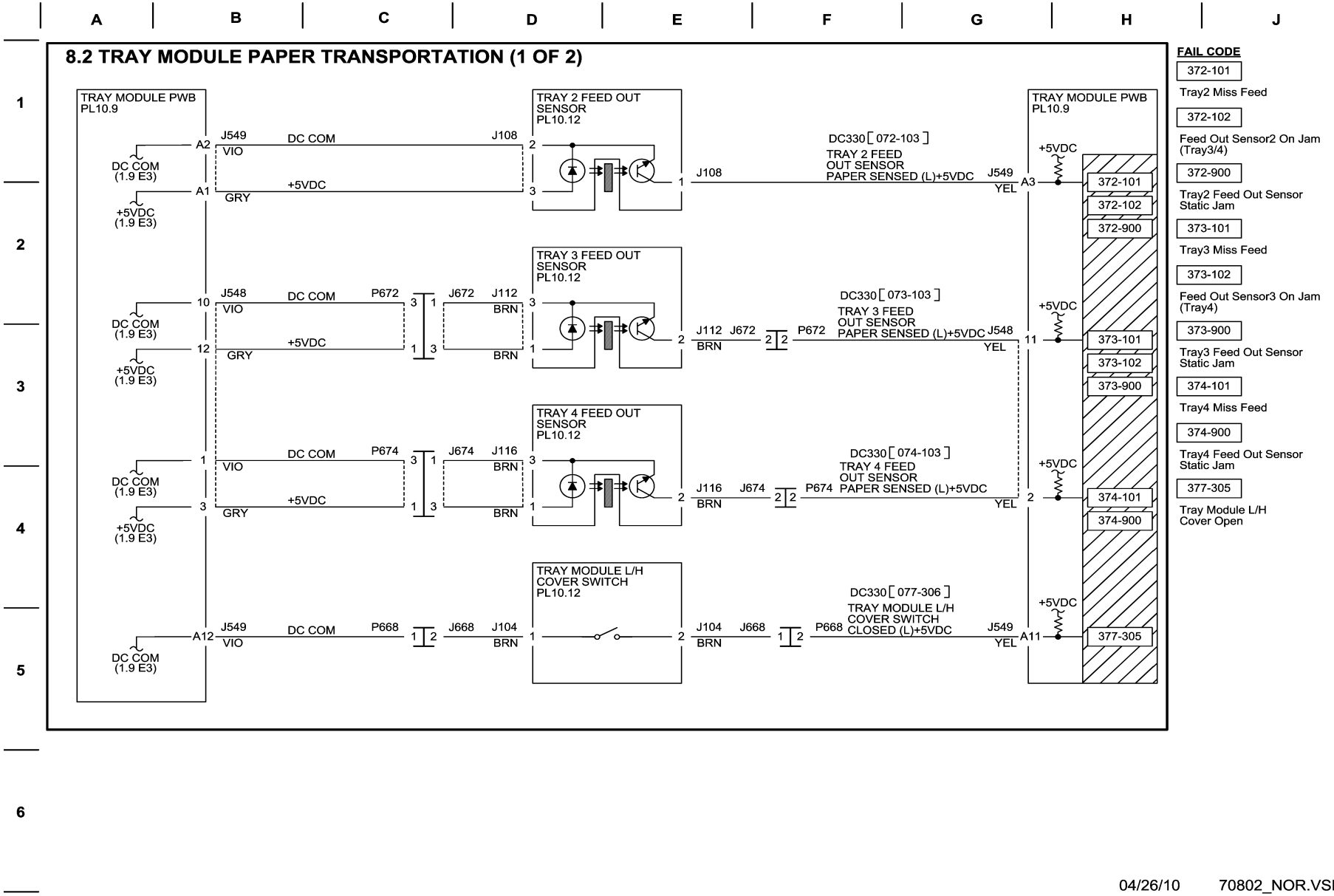

Figure 2 BSD 8.2 Tray Module Paper Transportation (1 of 2)

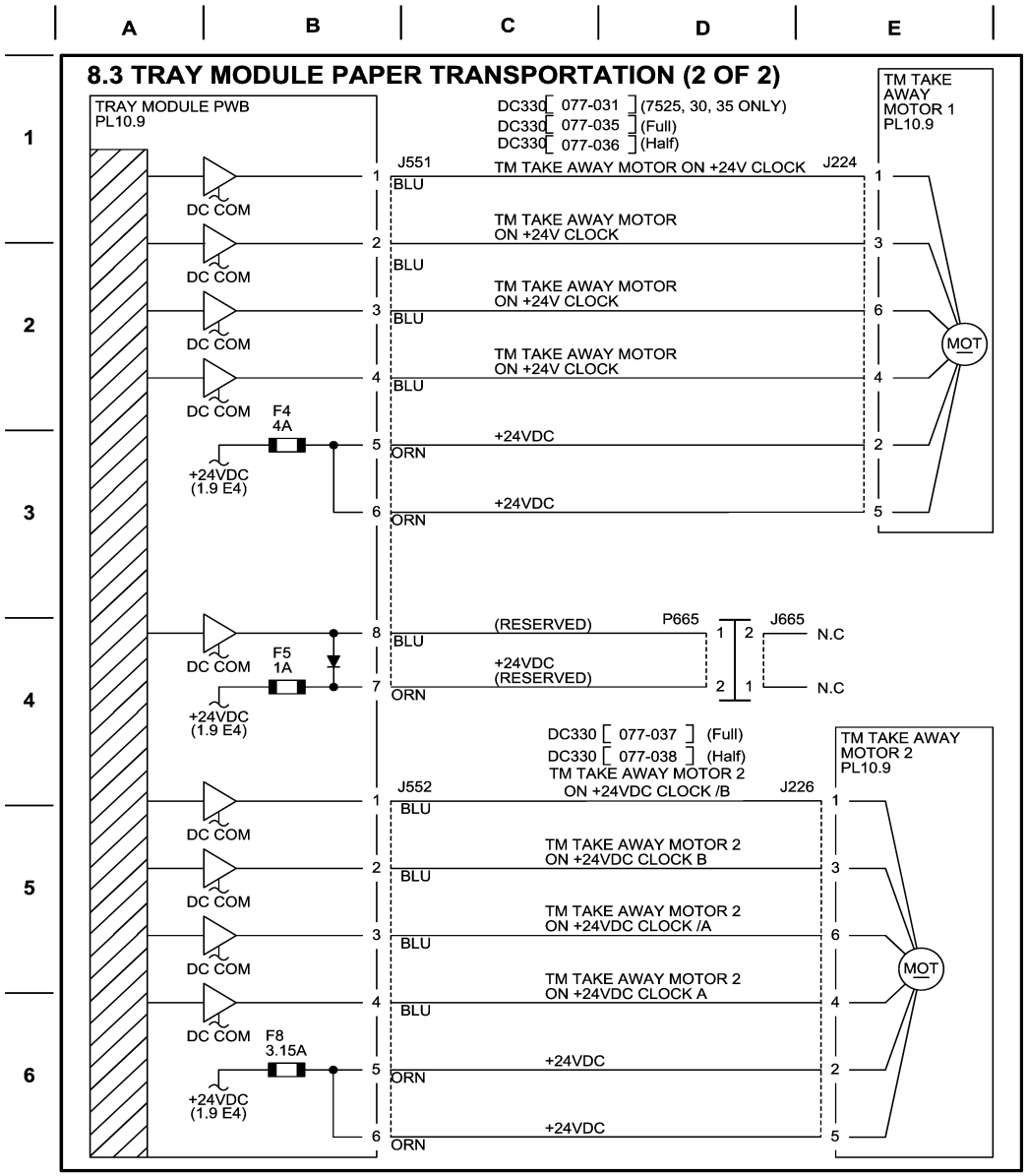

ELECTRICAL COMPONENTS

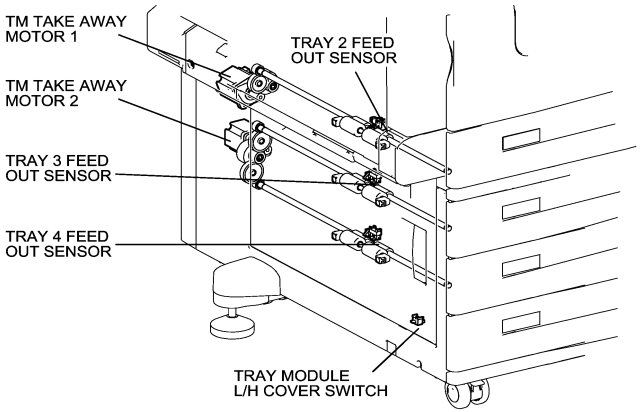

04/26/10 70803_NOR.VSD

Figure 3 BSD 8.3 Tray Module Paper Transportation (2 of 2)

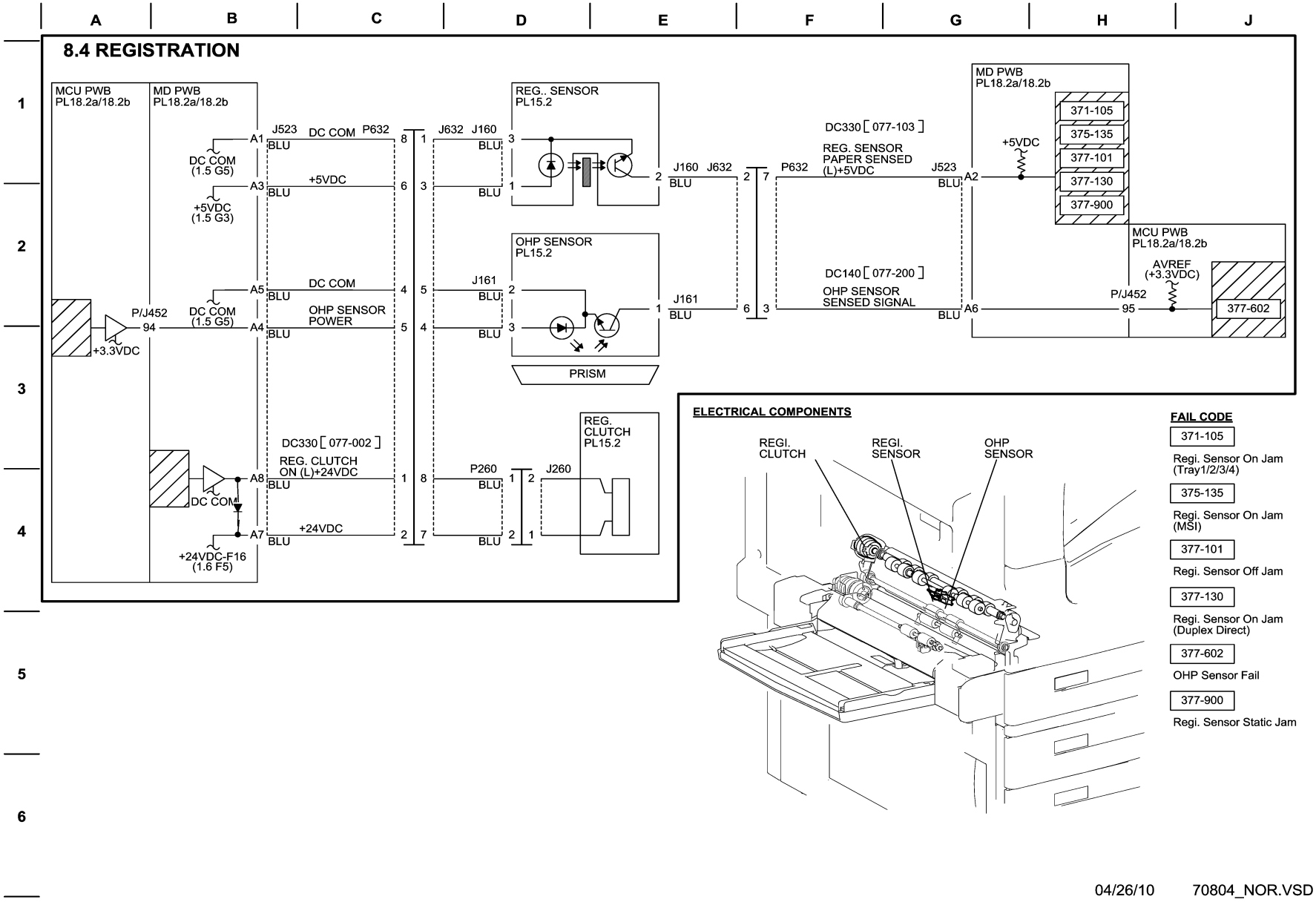

Figure 4 BSD 8.4 Registration

8.5 PAPER PATH (3TM)

Interlock Switch

No.	Switch Name	CH
I-1	Front Cover Interlock Switch	1.10
I-2	L/H Cover Interlock Switch	1.10

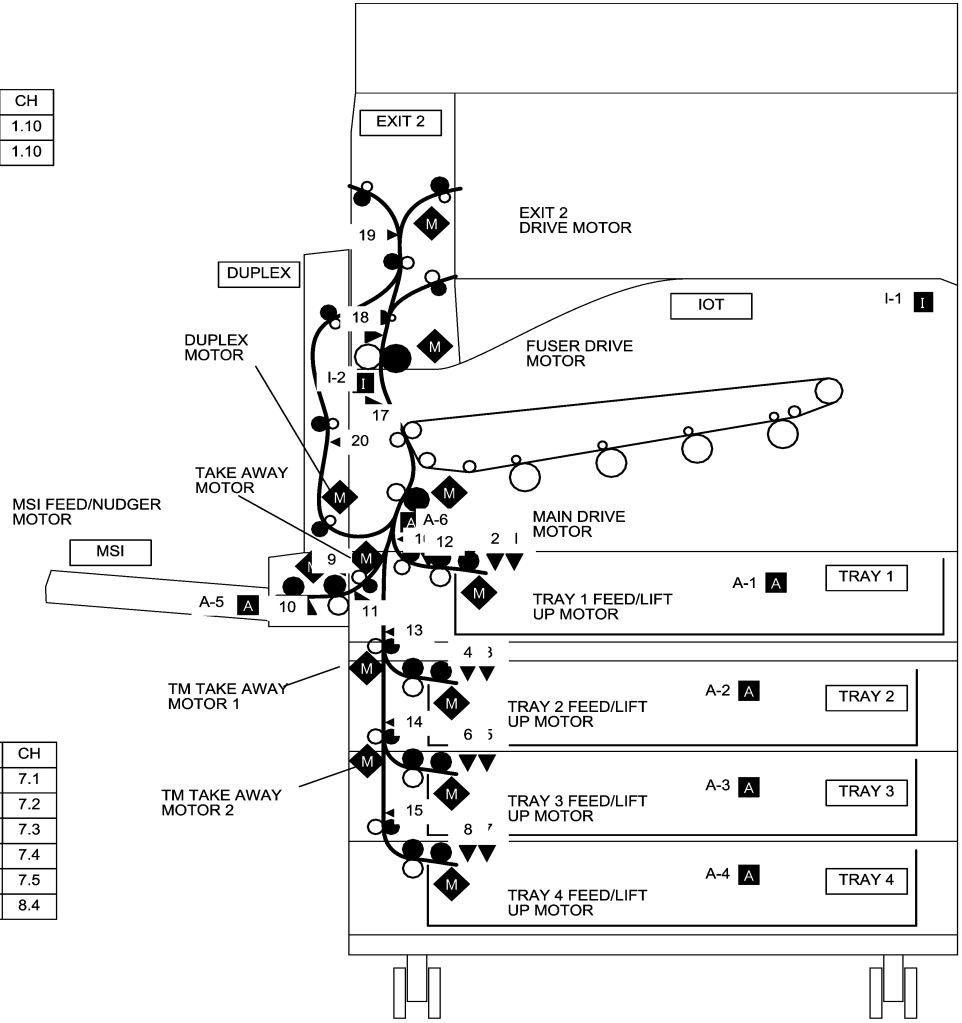

Paper Path Sensor

No.	Sensor Name	CH
1	Tray 1 Nudger Level Sensor	7.6
2	Tray 1 No Paper Sensor	7.6
3	Tray 2 Nudger Level Sensor	7.7
4	Tray 2 No Paper Sensor	7.7
5	Tray 3 Nudger Level Sensor	7.8
6	Tray 3 No Paper Sensor	7.8
7	Tray 4 Nudger Level Sensor	7.9
8	Tray 4 No Paper Sensor	7.9
9	MSI Nudger Position Sensor	7.10
10	MSI No Paper Sensor	7.10
11	MSI Feed Out Sensor	8.1
12	Tray 1 Pre Feed Sensor	8.1
13	Tray 2 Feed Out Sensor	8.2
14	Tray 3 Feed Out Sensor	8.2
15	Tray 4 Feed Out Sensor	8.2
16	Regi. Sensor	8.4
17	POB Sensor	9.36
18	Fuser Exit Sensor	10.6
19	Exit 2 Sensor	10.9
20	Duplex Wait Sensor	10.12

Analog Sensor

No.	Sensor Name	CH
A-1	TRAY-1	7.1
A-2	TRAY-2	7.2
A-3	TRAY-3	7.3
A-4	TRAY-4	7.4
A-5	TRAY-MSI	7.5
A-6	REGISTRATION	8.4

04/30/10 70805_NOR.VSD

Figure 5 BSD 8.5 Paper Path (3TM)

8.6 PAPER PATH (7545, 56)

Interlock Switch

No.	Switch Name	CH
I-1	Front Cover Interlock Switch	1.10
I-2	L/H Cover Interlock Switch	1.10

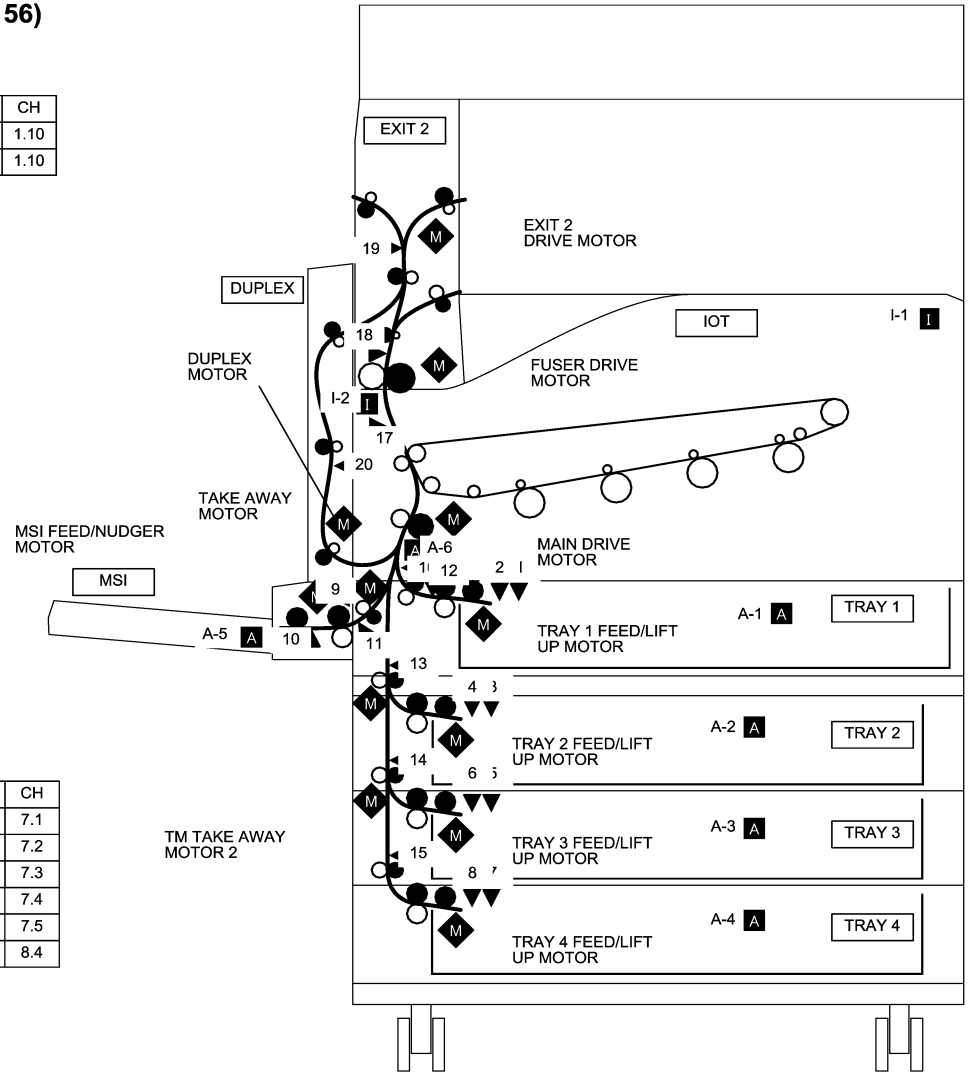

Paper Path Sensor

No.	Sensor Name	CH
1	Tray 1 Nudger Level Sensor	7.6
2	Tray 1 No Paper Sensor	7.6
3	Tray 2 Nudger Level Sensor	7.7
4	Tray 2 No Paper Sensor	7.7
5	Tray 3 Nudger Level Sensor	7.8
6	Tray 3 No Paper Sensor	7.8
7	Tray 4 Nudger Level Sensor	7.9
8	Tray 4 No Paper Sensor	7.9
9	MSI Nudger Position Sensor	7.10
10	MSI No Paper Sensor	7.10
11	MSI Feed Out Sensor	8.1
12	Tray 1 Pre Feed Sensor	8.1
13	Tray 2 Feed Out Sensor	8.2
14	Tray 3 Feed Out Sensor	8.2
15	Tray 4 Feed Out Sensor	8.2
16	Regi. Sensor	8.4
17	POB Sensor	9.36
18	Fuser Exit Sensor	10.6
19	Exit 2 Sensor	10.9
20	Duplex Wait Sensor	10.12

Analog Sensor

No.	Sensor Name	CH
A-1	TRAY-1	7.1
A-2	TRAY-2	7.2
A-3	TRAY-3	7.3
A-4	TRAY-4	7.4
A-5	TRAY-MSI	7.5
A-6	REGISTRATION	8.4

04/13/10 70806_NOR.VSD

Figure 6 BSD 8.6 Paper Path (TTM)

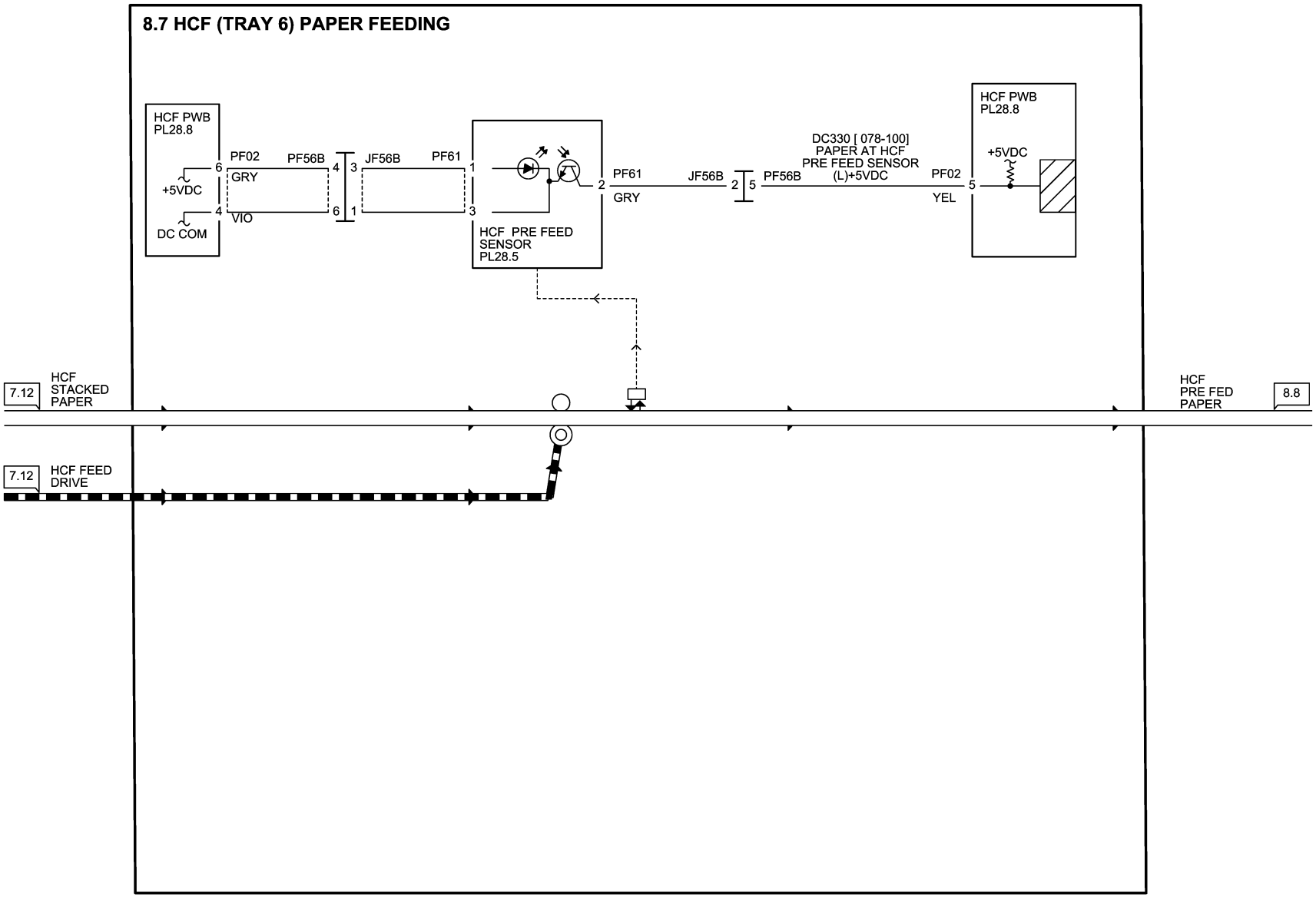

11/29/11 70807_NOR.VSD

Figure 7 BSD 8.7 HCF Paper Feeding

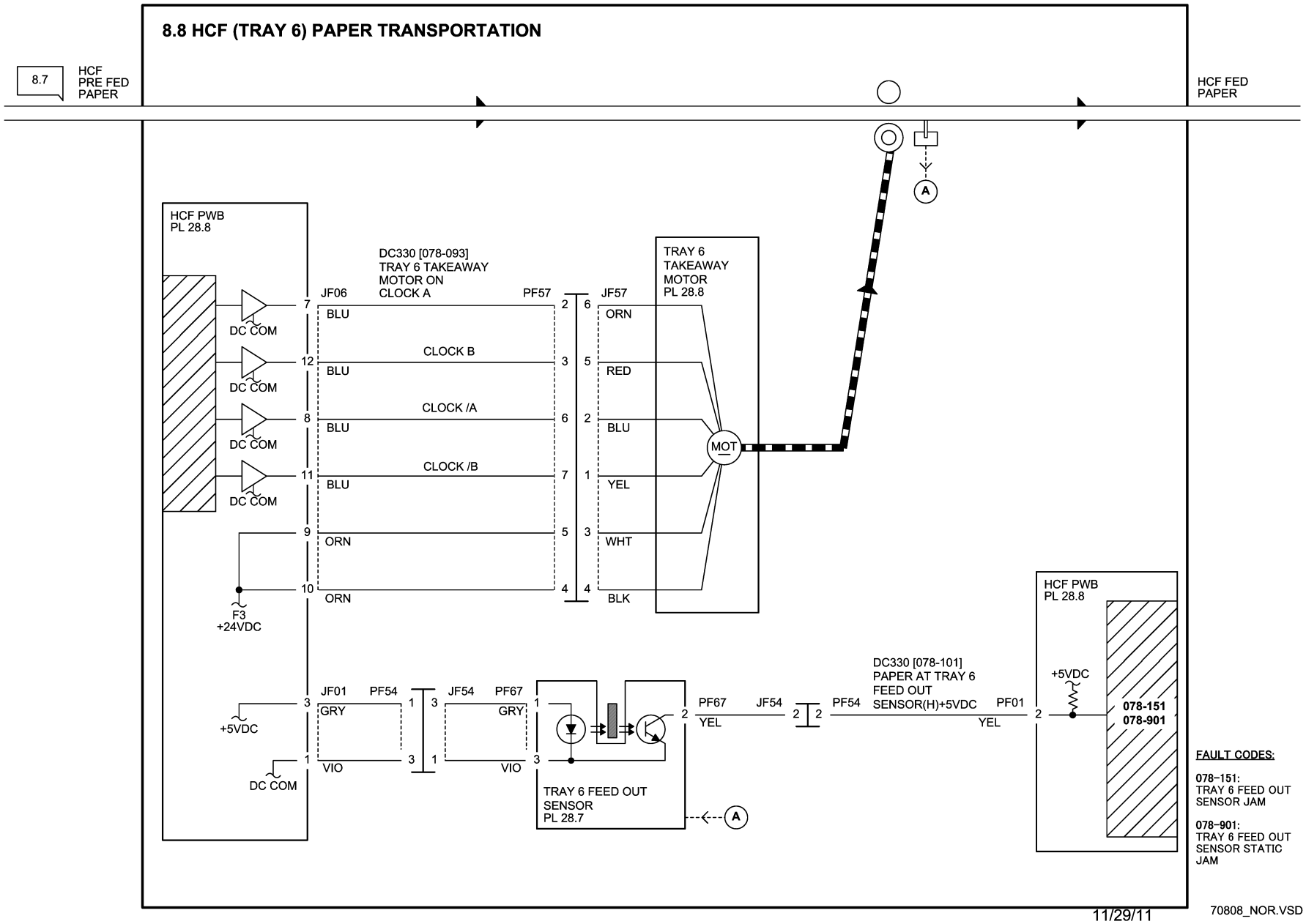
8.8 HCF (TRAY 6) PAPER TRANSPORTATION
8.7
HCF PRE FED PAPER
HCF FED PAPER
A
HCF PWB PL 28.8
DC330 [078-093] TRAY 6 TAKEAWAY MOTOR ON CLOCK A
TRAY 6 TAKEAWAY MOTOR PL 28.8
JF06
PF57
JF57
7
12
8
11
9
10
BLU
CLOCK B
CLOCK /A
CLOCK /B
ORN
2
3
6
7
5
4
6
5
2
1
3
4
RED
YEL
WHT
BLK
DC COM
MOT
F3 +24VDC
JF01
PF54
JF54
PF67
GRY
VIO
+5VDC
TRAY 6 FEED OUT SENSOR PL 28.7
DC330 [078-101] PAPER AT TRAY 6 FEED OUT SENSOR(H)+5VDC
PF01
078-151
078-901
FAULT CODES:
078-151: TRAY 6 FEED OUT SENSOR JAM
078-901: TRAY 6 FEED OUT SENSOR STATIC JAM
11/29/11
70808_NOR.VSD

Figure 8 BSD 8.8 HCF Paper Transportation

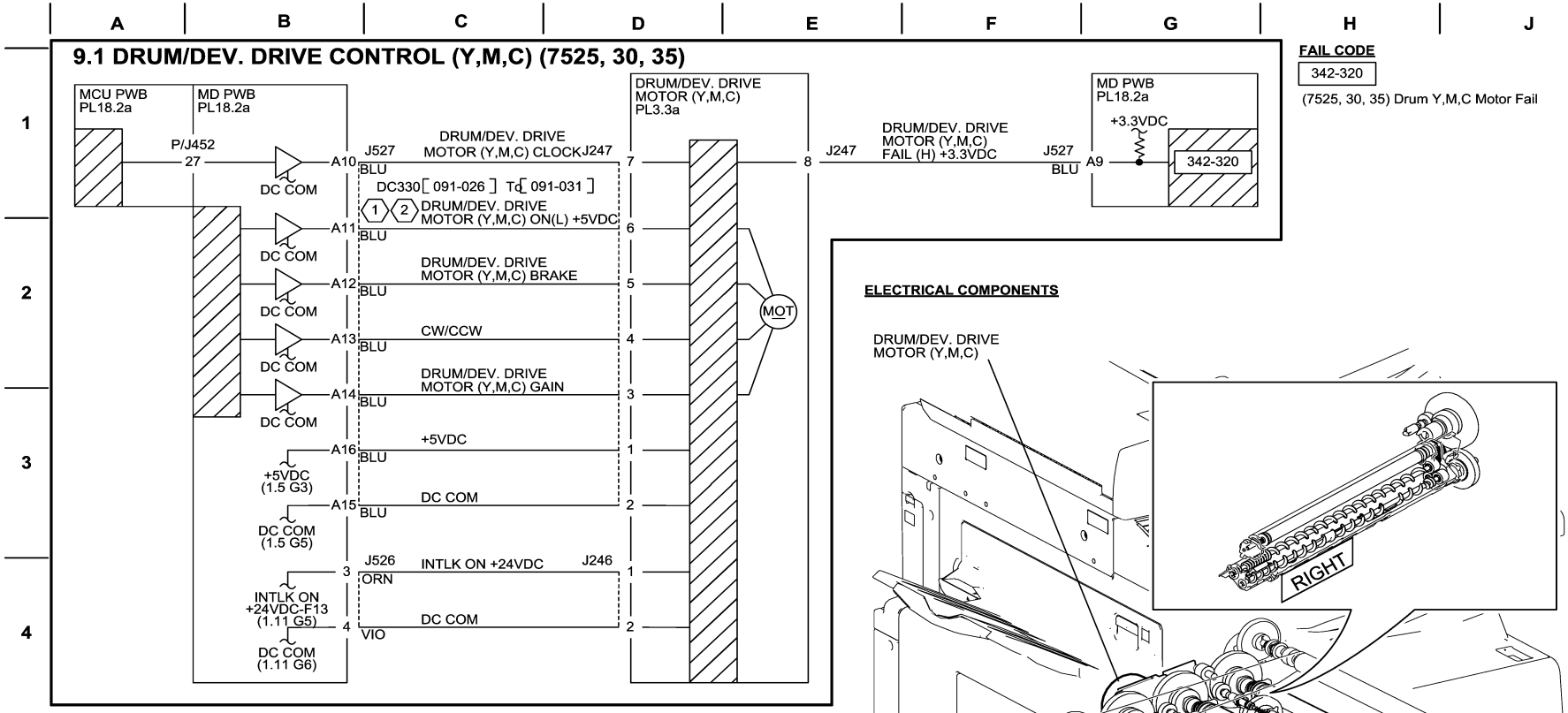

NOTE:

(1) The operation speed varies depending on the diag code.

(2) The diag codes below drive Drum/DEV. Drive Motor (Y/M/C), Drum/DEV. Drive Motor (K) and IBT Drive Motor simultaneously.

DRUM/DEV. DRIVE MOTOR (Y,M,C)	Operation Speed
DC330[091-026]	79mm/sec (Speed 1)
DC330[091-027]	121mm/sec (Speed 1)
DC330[091-028]	175mm/sec (Speed 1)
DC330[091-031]	121mm/sec (Reverse)

Complex Diag.	Operation Speed
DC330[091-014]	79mm/sec (Speed 1)
DC330[091-015]	121mm/sec (Speed 1)
DC330[091-016]	175mm/sec (Speed 1)
DC330[091-019]	121mm/sec (Reverse)

04/13/10 70901_NOR.VSD

Figure 1 BSD 9.1 Drum/Developer Drive Control (Y,M,C) (7525,7530,7535)

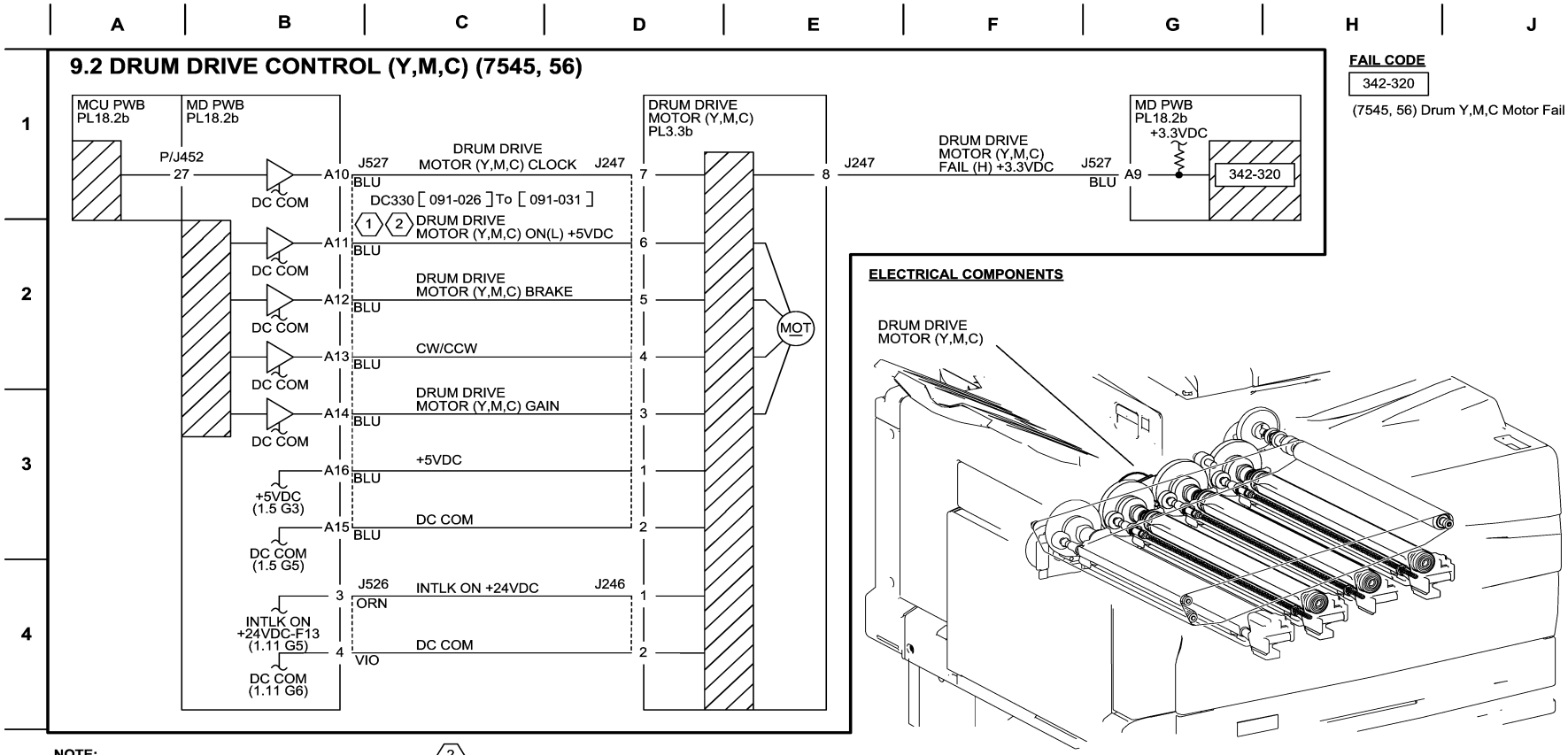

NOTE:

(1) The operation speed varies depending on the diag code.

(2) The diag codes below drive Drum/DEV. Drive Motor (Y/M/C), Drum/DEV. Drive Motor (K) and IBT Drive Motor simultaneously.

DRUM DRIVE MOTOR (Y,M,C)	Operation Speed
DC330[091-027]	121mm/sec (Speed 1)
DC330[091-028]	175mm/sec (Speed 1)
DC330[091-029]	200mm/sec (Speed 1)
DC330[091-030]	225mm/sec (Speed 1)
DC330[091-031]	121mm/sec (Reverse)

Complex Diagnostics	Operation Speed
DC330[091-015]	121mm/sec (Speed 1)
DC330[091-016]	175mm/sec (Speed 1)
DC330[091-017]	200mm/sec (Speed 1)
DC330[091-018]	225mm/sec (Speed 1)
DC330[091-019]	121mm/sec (Reverse)

04/30/10 70902_NOR.VSD

Figure 2 BSD 9.2 Drum Drive Control (Y,M,C) (7545,7556)

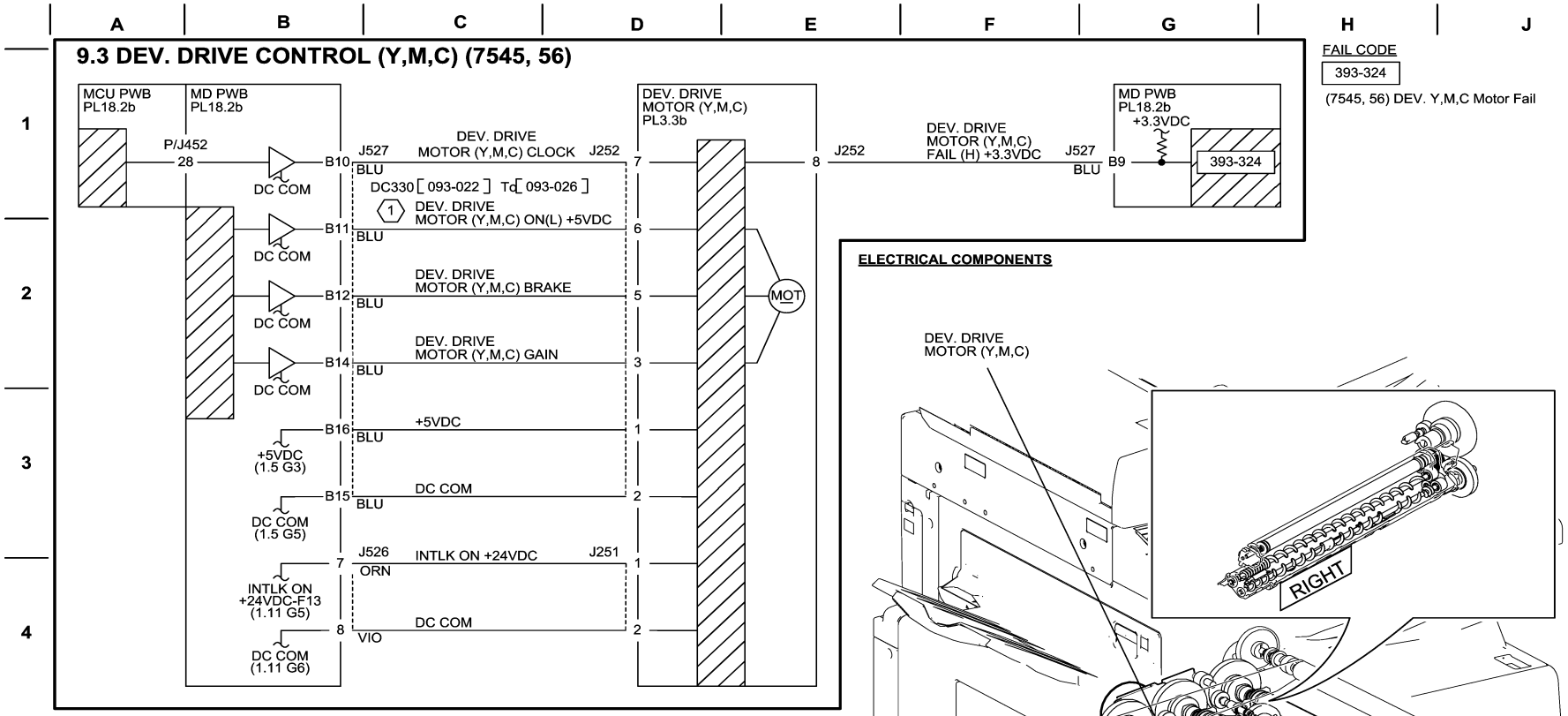

NOTE:

1 The operation speed varies depending on the diag code.

DEV. DRIVE MOTOR (Y,M,C)	Operation Speed
DC330[093-022]	121mm/sec
DC330[093-023]	175mm/sec
DC330[093-024]	200mm/sec
DC330[093-025]	225mm/sec
DC330[093-026]	255mm/sec

04/30/10 70903_NOR.VSD

Figure 3 BSD 9.3 Developer Drive Control (Y,M,C) (7545,7556)

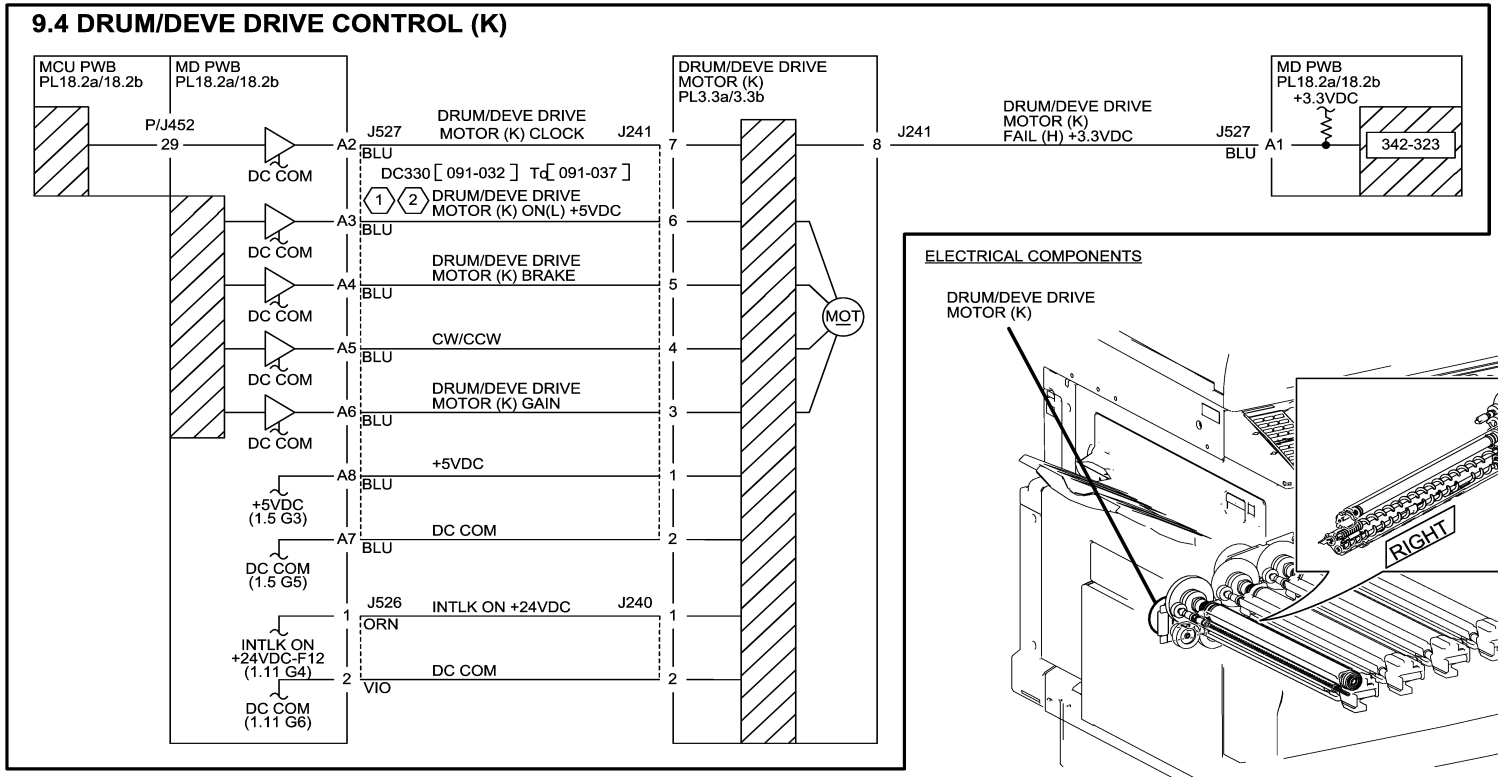

NOTE:

1 The operation speed varies depending on the diag code.

2 The diag codes below drive Drum/Deve Drive Motor (K) and IBT Drive Motor simultaneously.

DRUM/DEVE DRIVE MOTOR (K)	Operation Speed	Targeted Model
DC330[091-032]	79mm/sec (Speed 1)	2270/3370
DC330[091-033]	121mm/sec (Speed 1)	2270/3370/4470/5570
DC330[091-034]	175mm/sec (Speed 1)	2270/3370/4470/5570
DC330[091-035]	200mm/sec (Speed 1)	4470/5570
DC330[091-036]	255mm/sec (Speed 1)	4470/5570
DC330[091-037]	121mm/sec (Reverse)	2270/3370/4470/5570

Complex Diagnostics	Operation Speed	Targeted Model
DC330[091-020]	79mm/sec (Speed 1)	2270/3370
DC330[091-021]	121mm/sec (Speed 1)	2270/3370/4470/5570
DC330[091-022]	175mm/sec (Speed 1)	2270/3370/4470/5570
DC330[091-023]	200mm/sec (Speed 0)	4470/5570
DC330[091-024]	255mm/sec (Speed 2)	4470/5570
DC330[091-025]	121mm/sec (Reverse)	2270/3370/4470/5570

04/13/10 70904_NOR.VSD

Figure 4 BSD 9.4 Drum/Developer Drive Control (K)

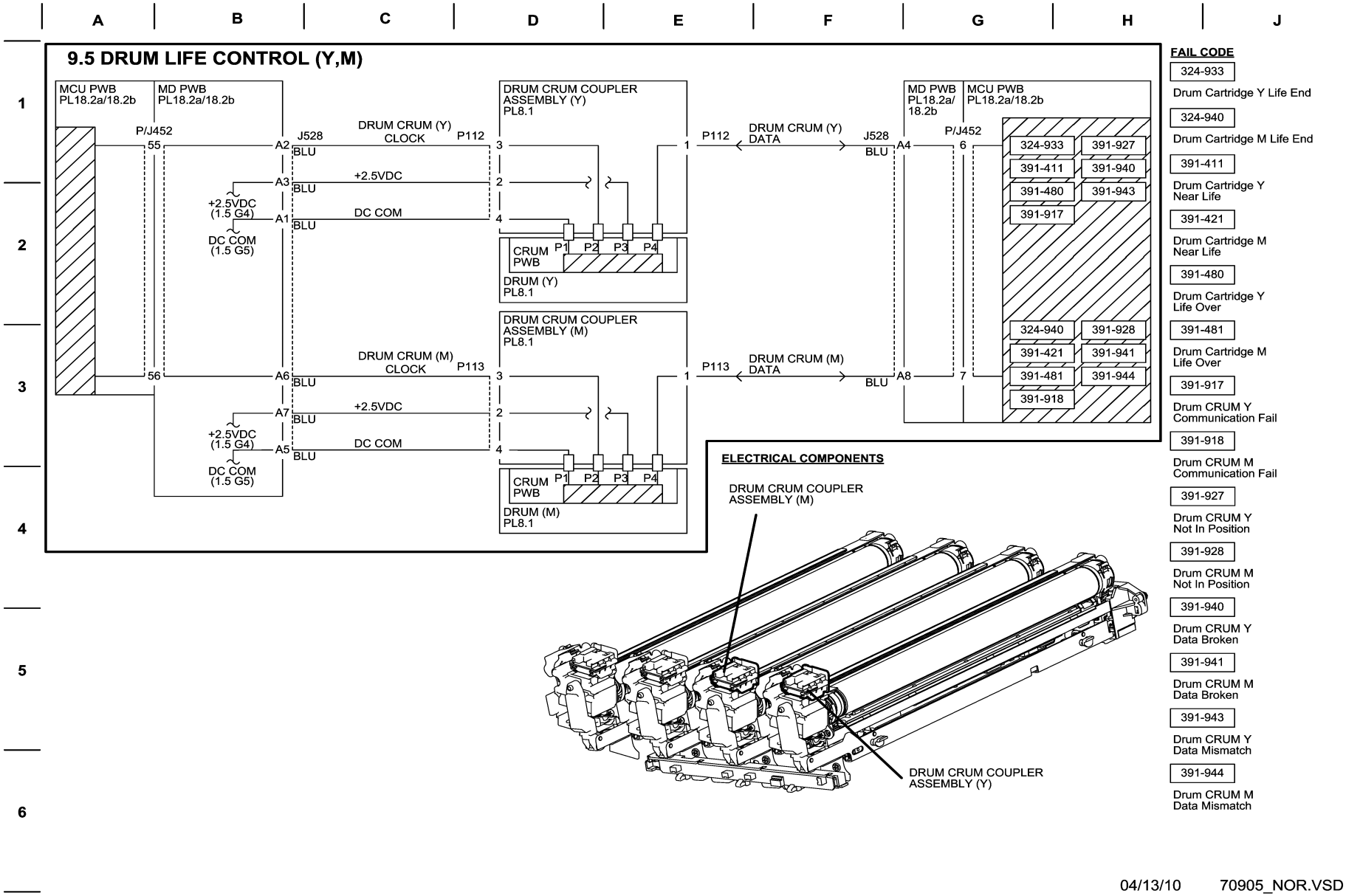

Figure 5 BSD 9.5 Drum Life Control (Y,M)

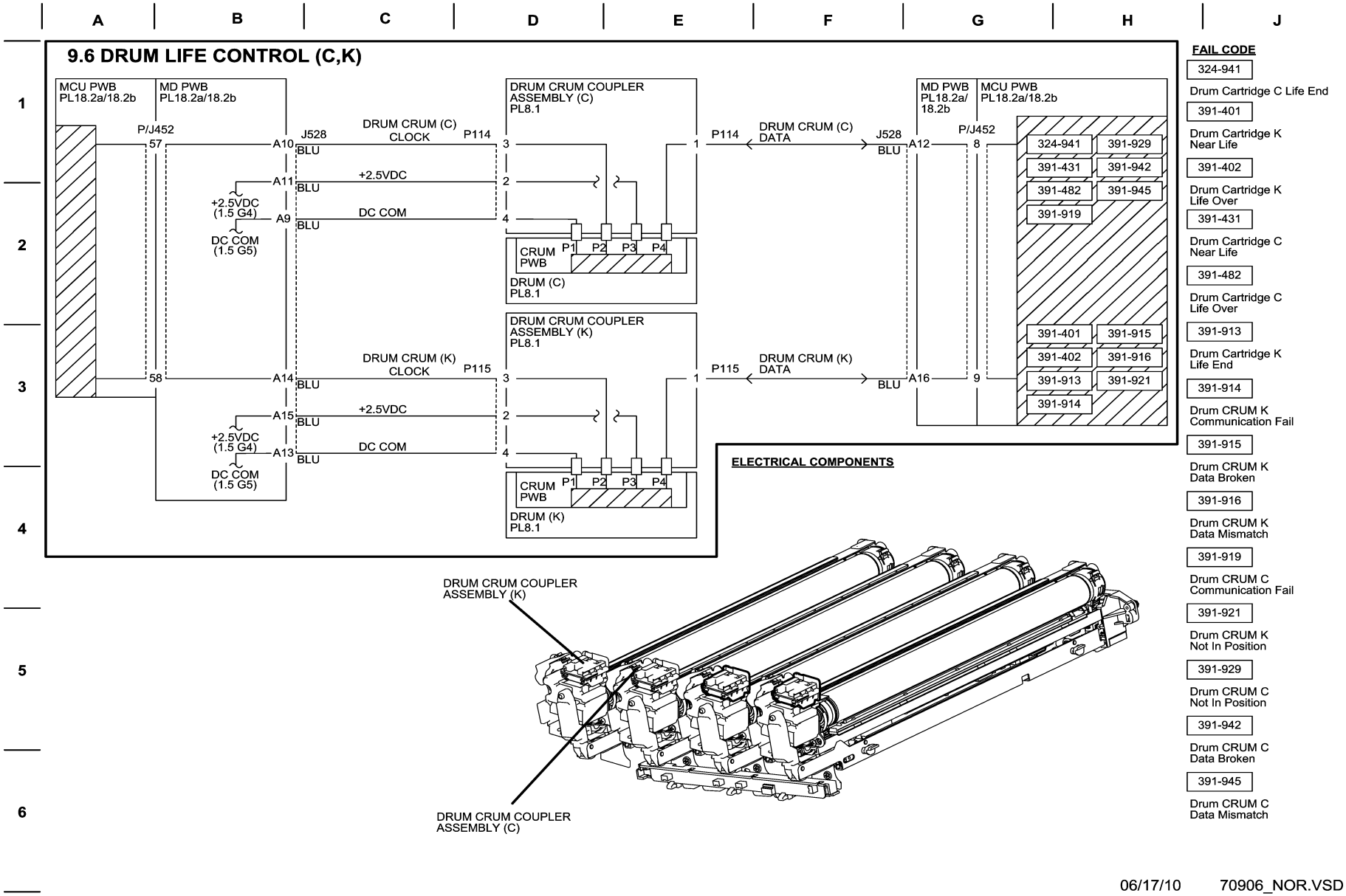

Figure 6 BSD 9.6 Drum Life Control (C,K)

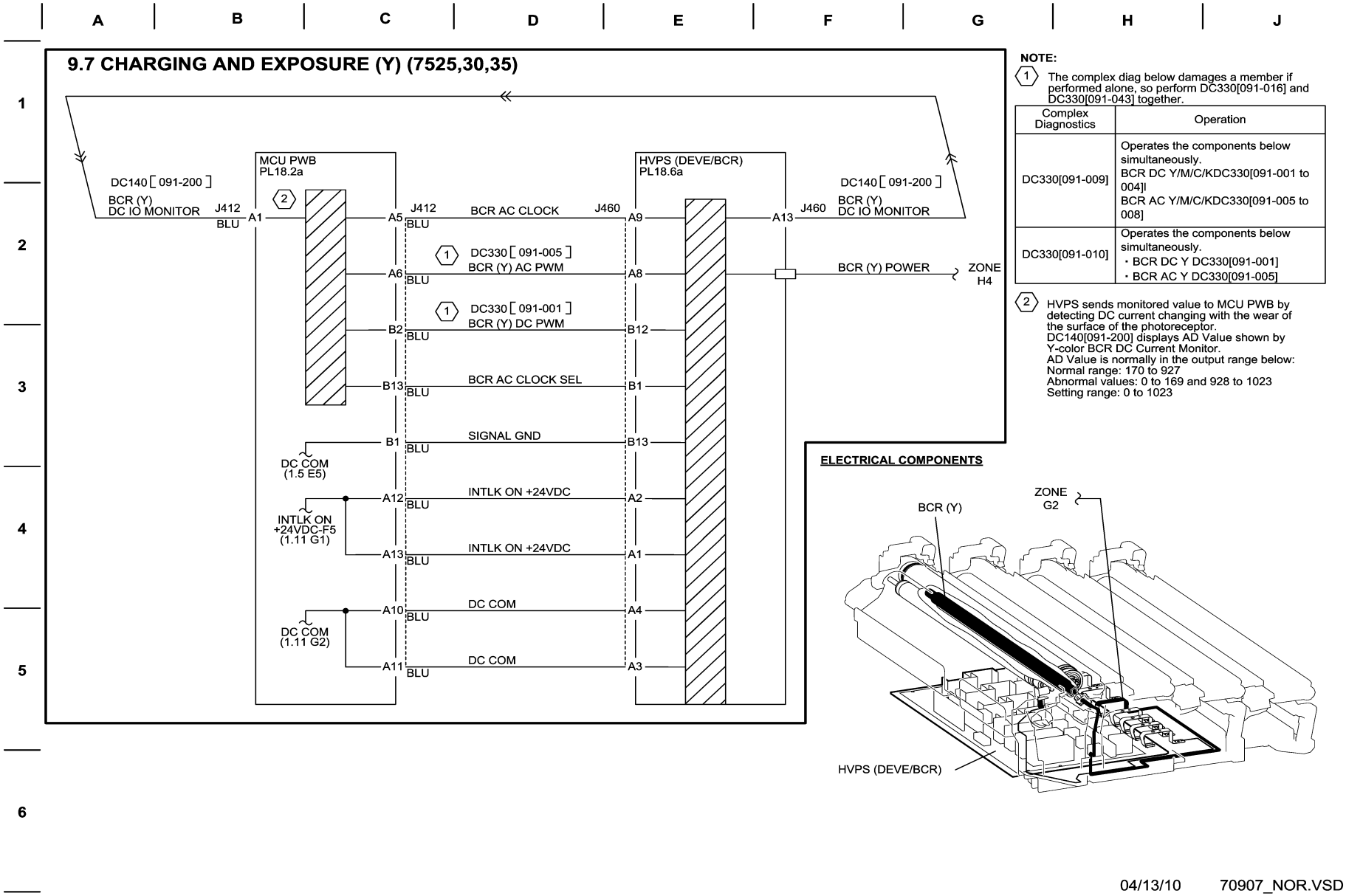

NOTE:

(1) The complex diag below damages a member if performed alone, so perform DC330[091-016] and DC330[091-043] together.

Complex Diagnostics	Operation
DC330[091-009]	Operates the components below simultaneously. BCR DC Y/M/C/KDC330[091-001 to 004]l BCR AC Y/M/C/KDC330[091-005 to 008]
DC330[091-010]	Operates the components below simultaneously. ・BCR DC Y DC330[091-001] ・BCR AC Y DC330[091-005]

(2) HVPS sends monitored value to MCU PWB by detecting DC current changing with the wear of the surface of the photoreceptor.
DC140[091-200] displays AD Value shown by Y-color BCR DC Current Monitor.
AD Value is normally in the output range below:
Normal range: 170 to 927
Abnormal values: 0 to 169 and 928 to 1023
Setting range: 0 to 1023

04/13/10 70907_NOR.VSD

Figure 7 BSD 9.7 Charging and Exposure (Y) (7525,7530,7535)

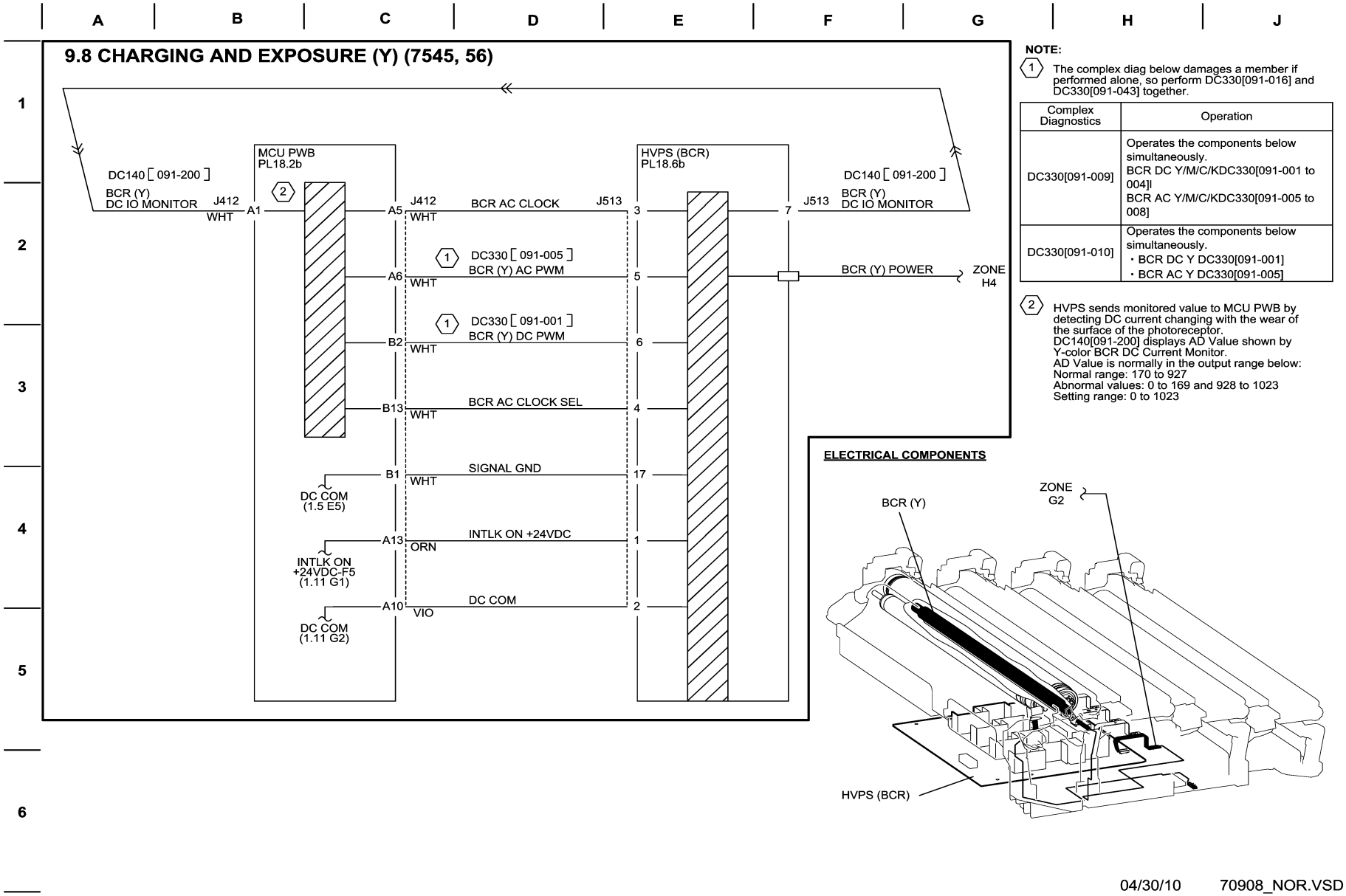

NOTE:

(1) The complex diag below damages a member if performed alone, so perform DC330[091-016] and DC330[091-043] together.

Complex Diagnostics	Operation
DC330[091-009]	Operates the components below simultaneously. BCR DC Y/M/C/KDC330[091-001 to 004]l BCR AC Y/M/C/KDC330[091-005 to 008]
DC330[091-010]	Operates the components below simultaneously. ・BCR DC Y DC330[091-001] ・BCR AC Y DC330[091-005]

(2) HVPS sends monitored value to MCU PWB by detecting DC current changing with the wear of the surface of the photoreceptor.
DC140[091-200] displays AD Value shown by Y-color BCR DC Current Monitor.
AD Value is normally in the output range below:
Normal range: 170 to 927
Abnormal values: 0 to 169 and 928 to 1023
Setting range: 0 to 1023

Figure 8 BSD 9.8 Charging and Exposure (Y) (7545,7556)

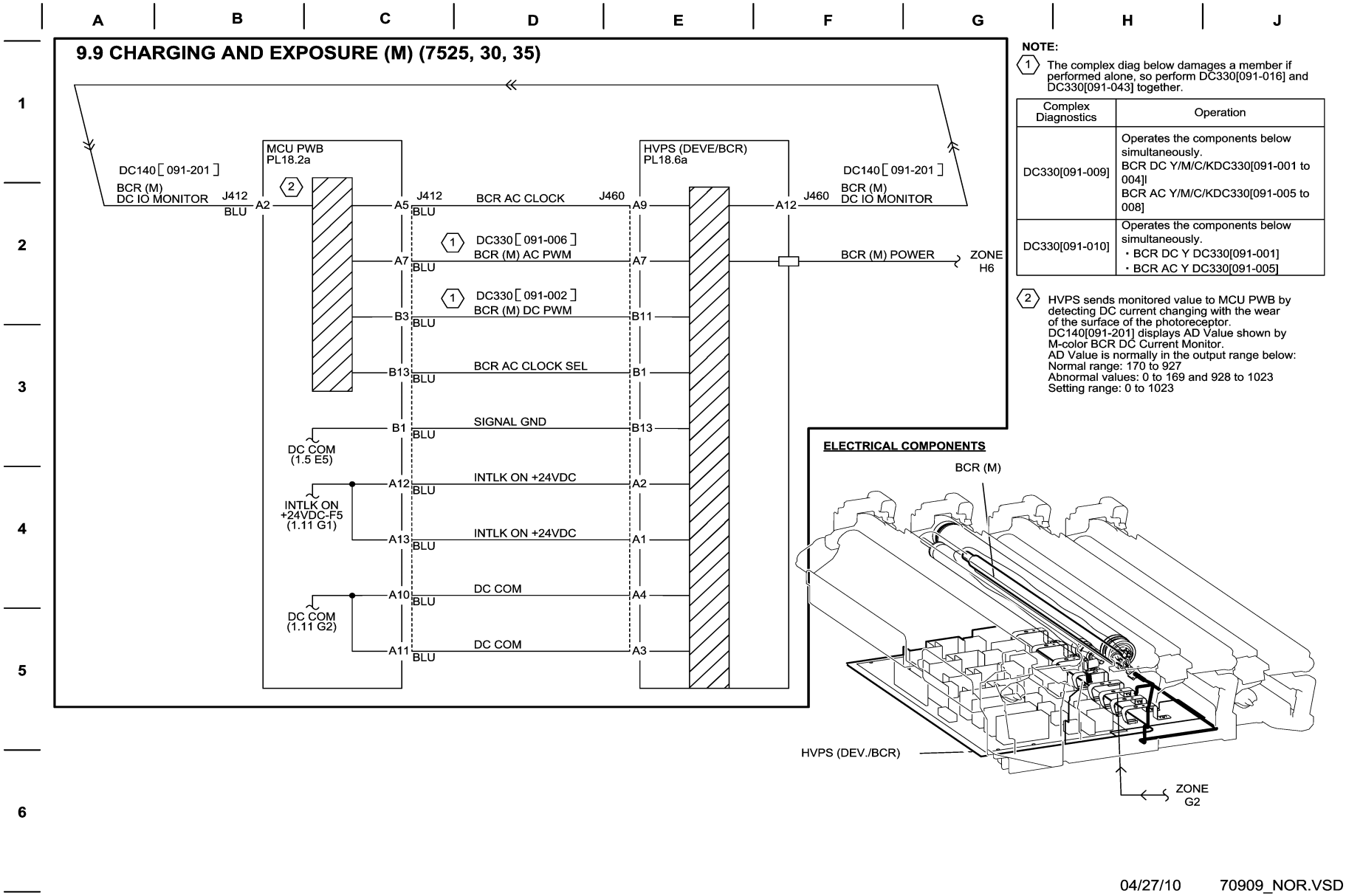

NOTE:

1. The complex diag below damages a member if performed alone, so perform DC330[091-016] and DC330[091-043] together.

Complex Diagnostics	Operation
DC330[091-009]	Operates the components below simultaneously. BCR DC Y/M/C/KDC330[091-001 to 004]l BCR AC Y/M/C/KDC330[091-005 to 008]
DC330[091-010]	Operates the components below simultaneously. ・BCR DC Y DC330[091-001] ・BCR AC Y DC330[091-005]

2. HVPS sends monitored value to MCU PWB by detecting DC current changing with the wear of the surface of the photoreceptor.
DC140[091-201] displays AD Value shown by M-color BCR DC Current Monitor.
AD Value is normally in the output range below:
Normal range: 170 to 927
Abnormal values: 0 to 169 and 928 to 1023
Setting range: 0 to 1023

Figure 9 BSD 9.9 Charging and Exposure (M) (7525,7530,7535)

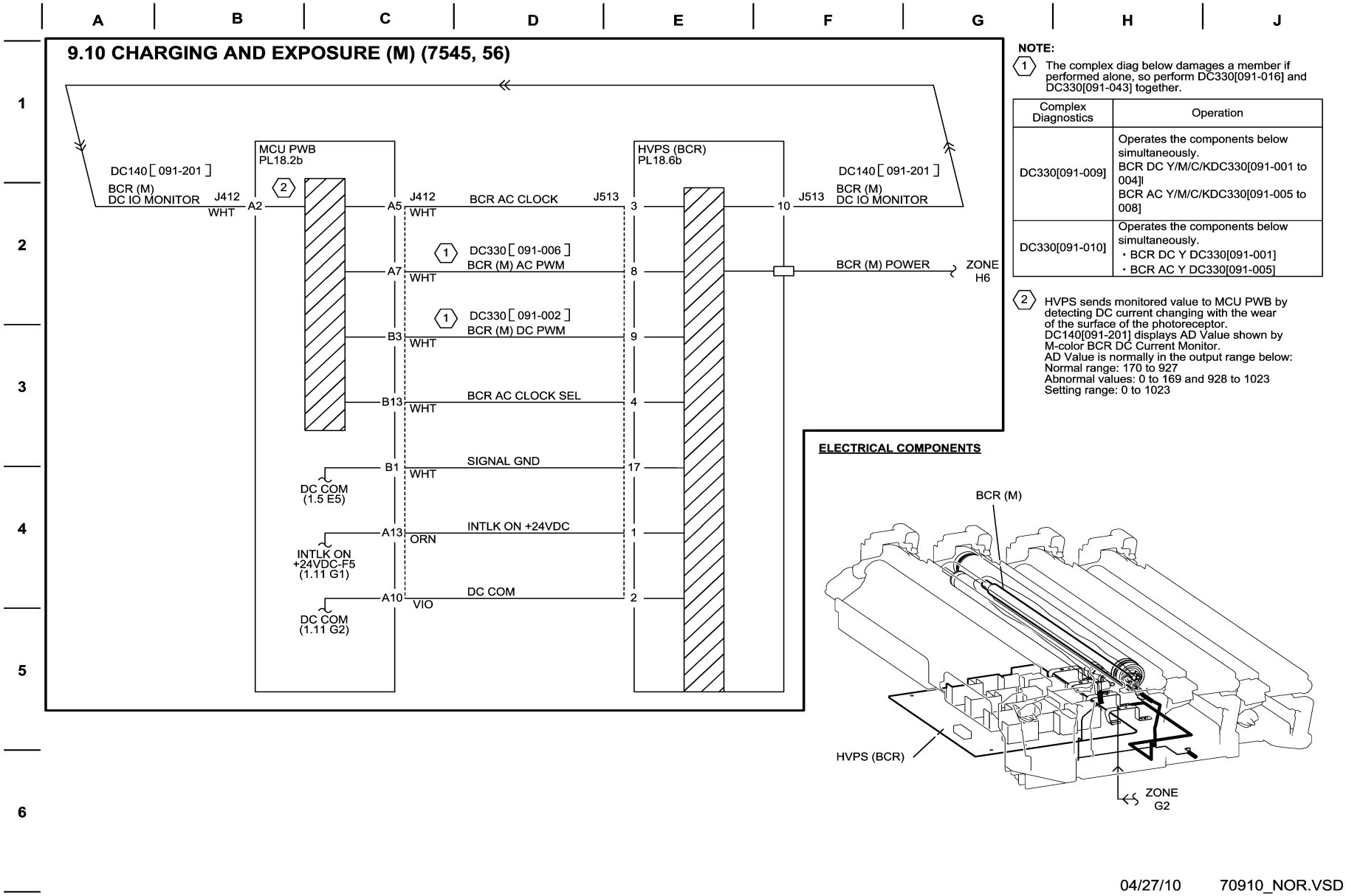

NOTE:

1. The complex diag below damages a member if performed alone, so perform DC330[091-016] and DC330[091-043] together.

Complex Diagnostics	Operation
DC330[091-009]	Operates the components below simultaneously. BCR DC Y/M/C/KDC330[091-001 to 004]l BCR AC Y/M/C/KDC330[091-005 to 008]
DC330[091-010]	Operates the components below simultaneously. ・BCR DC Y DC330[091-001] ・BCR AC Y DC330[091-005]

2. HVPS sends monitored value to MCU PWB by detecting DC current changing with the wear of the surface of the photoreceptor.
DC140[091-201] displays AD Value shown by M-color BCR DC Current Monitor.
AD Value is normally in the output range below:
Normal range: 170 to 927
Abnormal values: 0 to 169 and 928 to 1023
Setting range: 0 to 1023

Figure 10 BSD 9.10 Charging and Exposure (M) (7545,7556)

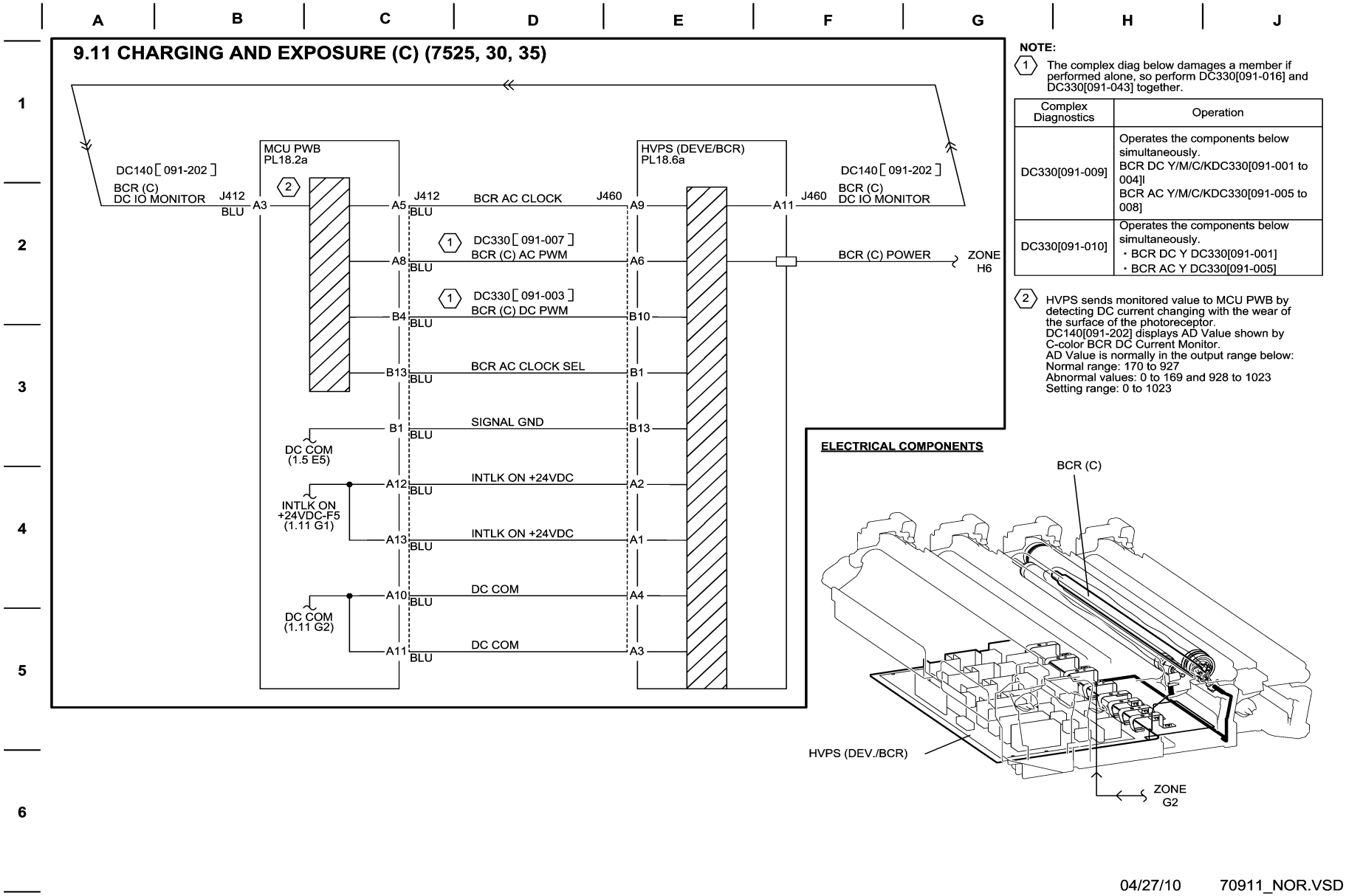

Figure 11 BSD 9.11 Charging and Exposure (C) (7525,7530,7535)

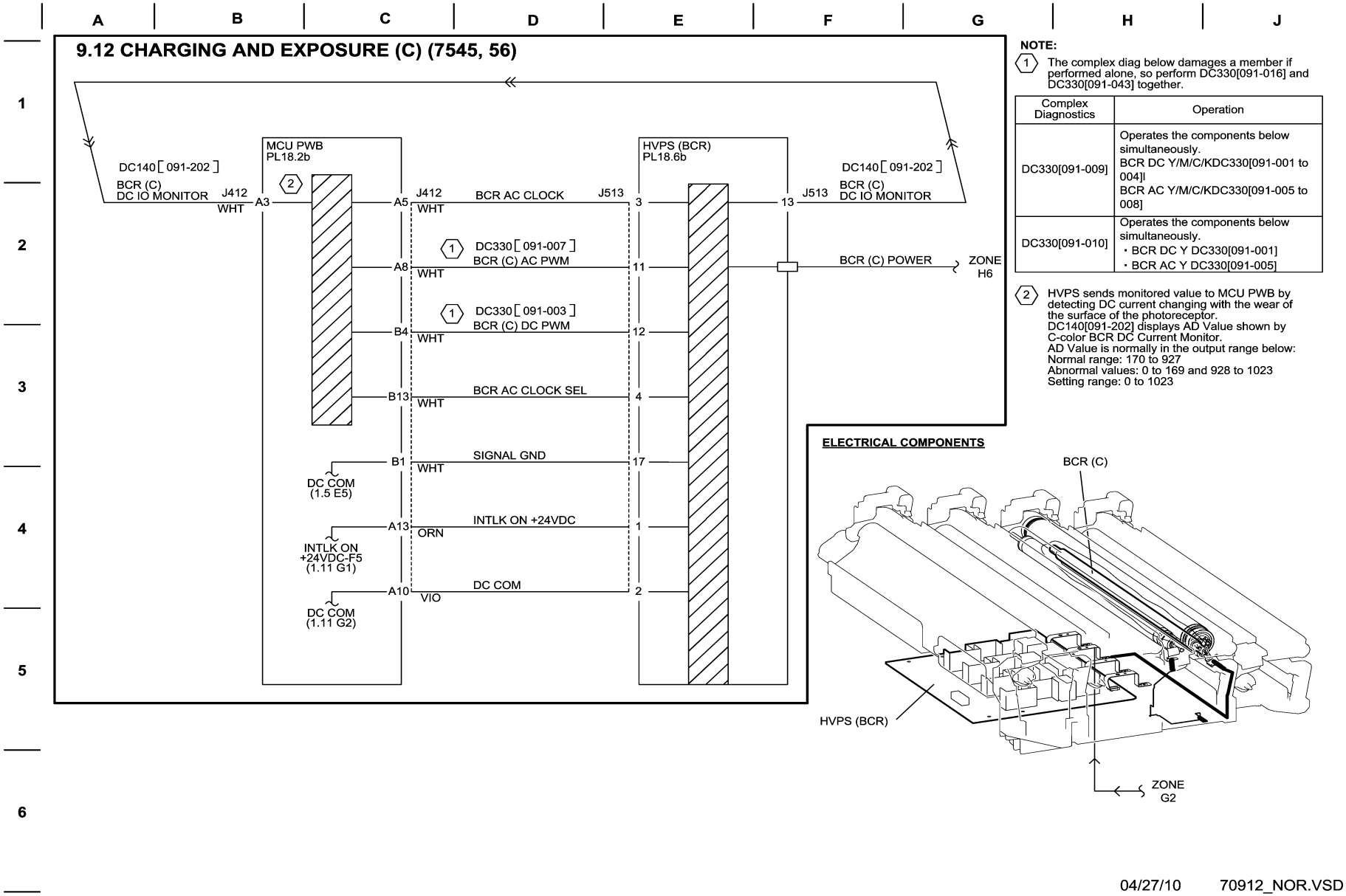

NOTE:

1. The complex diag below damages a member if performed alone, so perform DC330[091-016] and DC330[091-043] together.

Complex Diagnostics	Operation
DC330[091-009]	Operates the components below simultaneously. BCR DC Y/M/C/KDC330[091-001 to 004]l BCR AC Y/M/C/KDC330[091-005 to 008]
DC330[091-010]	Operates the components below simultaneously. ・BCR DC Y DC330[091-001] ・BCR AC Y DC330[091-005]

2. HVPS sends monitored value to MCU PWB by detecting DC current changing with the wear of the surface of the photoreceptor.
DC140[091-202] displays AD Value shown by C-color BCR DC Current Monitor.
AD Value is normally in the output range below:
Normal range: 170 to 927
Abnormal values: 0 to 169 and 928 to 1023
Setting range: 0 to 1023

Figure 12 BSD 9.12 Charging and Exposure (C) (7545,7556)

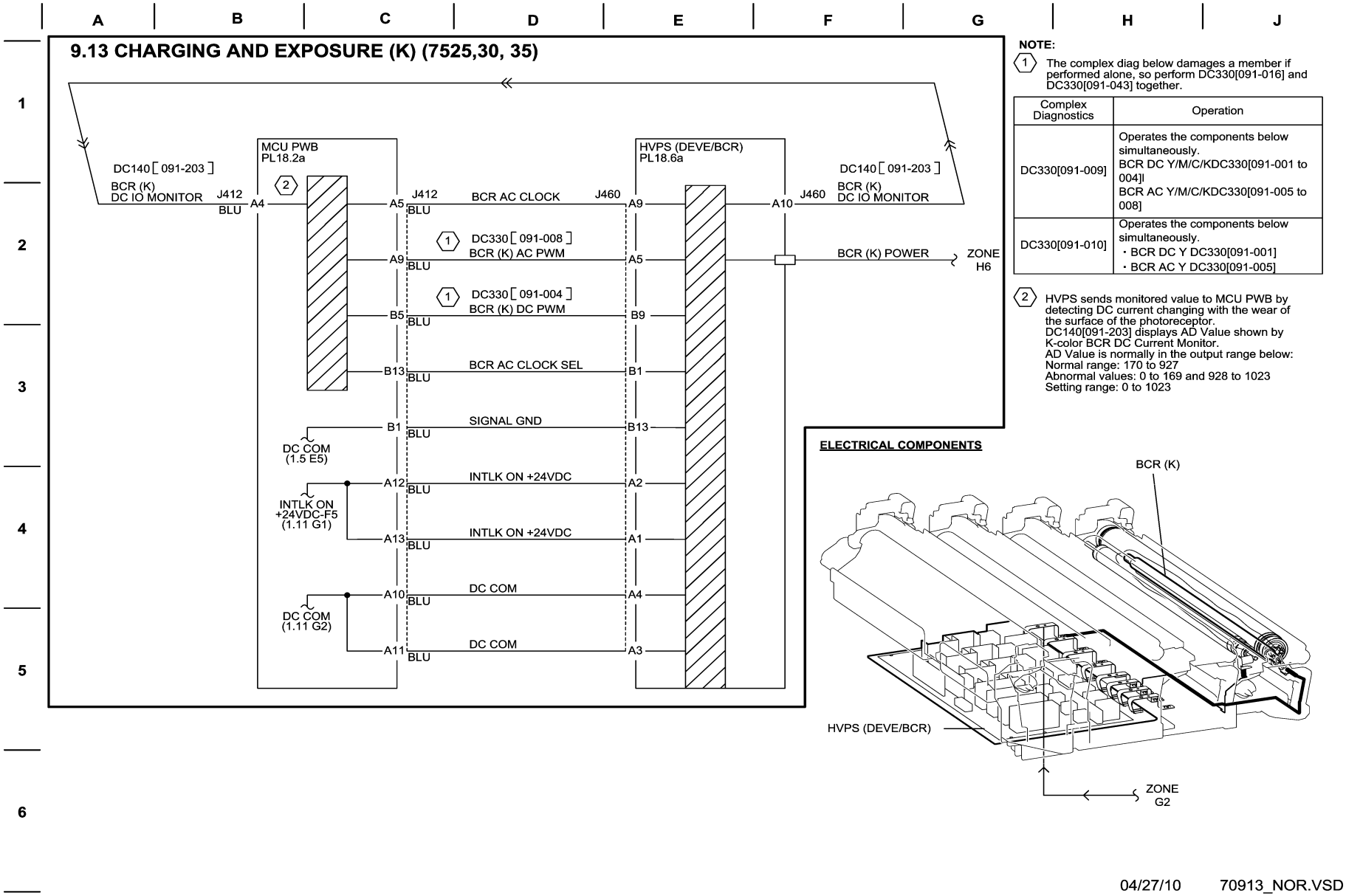

NOTE:

(1) The complex diag below damages a member if performed alone, so perform DC330[091-016] and DC330[091-043] together.

Complex Diagnostics	Operation
DC330[091-009]	Operates the components below simultaneously. BCR DC Y/M/C/KDC330[091-001 to 004]I BCR AC Y/M/C/KDC330[091-005 to 008]
DC330[091-010]	Operates the components below simultaneously. ・BCR DC Y DC330[091-001] ・BCR AC Y DC330[091-005]

(2) HVPS sends monitored value to MCU PWB by detecting DC current changing with the wear of the surface of the photoreceptor.
DC140[091-203] displays AD Value shown by K-color BCR DC Current Monitor.
AD Value is normally in the output range below:
Normal range: 170 to 927
Abnormal values: 0 to 169 and 928 to 1023
Setting range: 0 to 1023

Figure 13 BSD 9.13 Charging and Exposure (K) (7525,7530,7535)

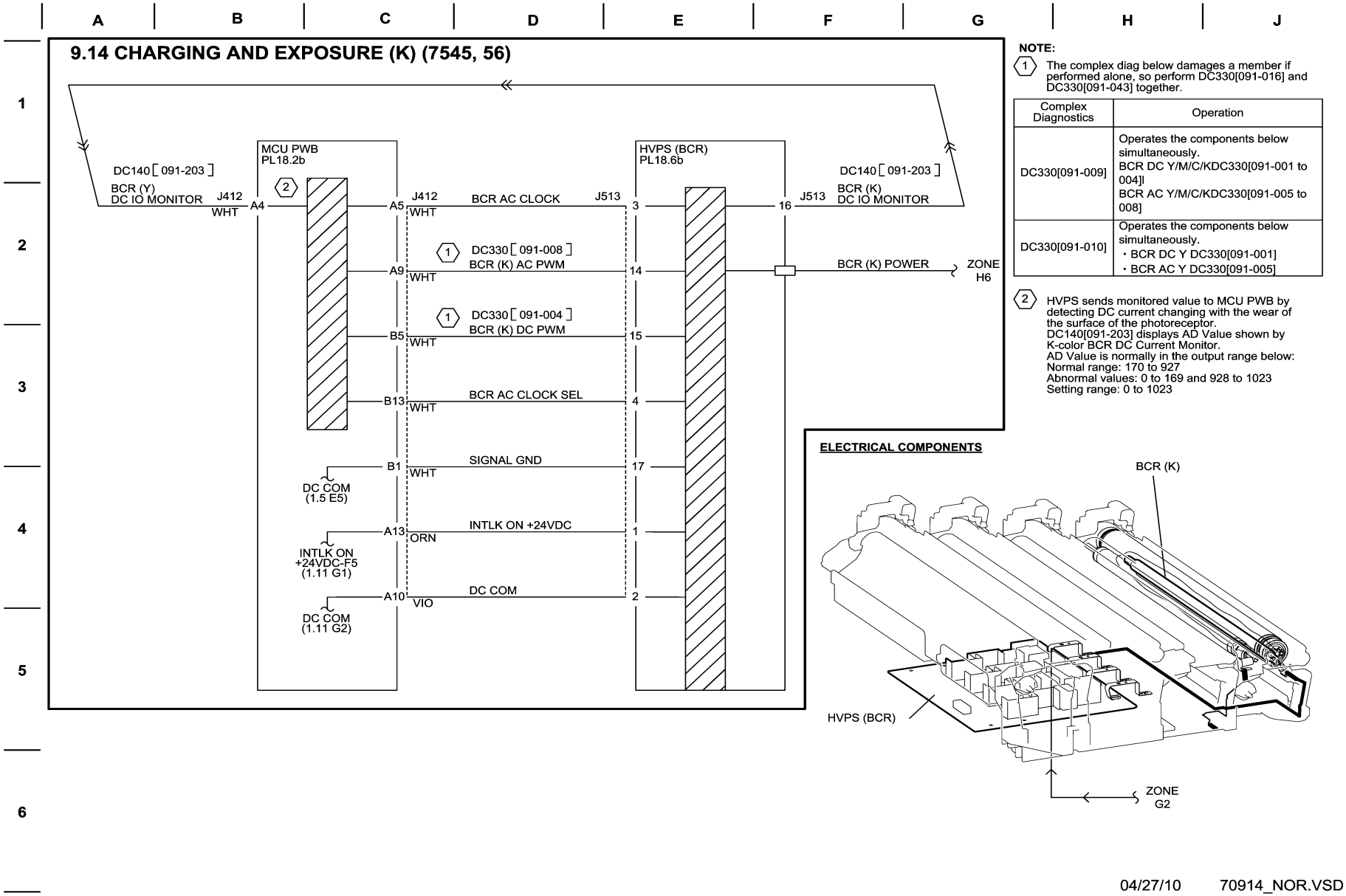

NOTE:

(1) The complex diag below damages a member if performed alone, so perform DC330[091-016] and DC330[091-043] together.

Complex Diagnostics	Operation
DC330[091-009]	Operates the components below simultaneously. BCR DC Y/M/C/KDC330[091-001 to 004]l BCR AC Y/M/C/KDC330[091-005 to 008]
DC330[091-010]	Operates the components below simultaneously. ・BCR DC Y DC330[091-001] ・BCR AC Y DC330[091-005]

(2) HVPS sends monitored value to MCU PWB by detecting DC current changing with the wear of the surface of the photoreceptor.
DC140[091-203] displays AD Value shown by K-color BCR DC Current Monitor.
AD Value is normally in the output range below:
Normal range: 170 to 927
Abnormal values: 0 to 169 and 928 to 1023
Setting range: 0 to 1023

Figure 14 BSD 9.14 Charging and Exposure (K) (7545,7556)

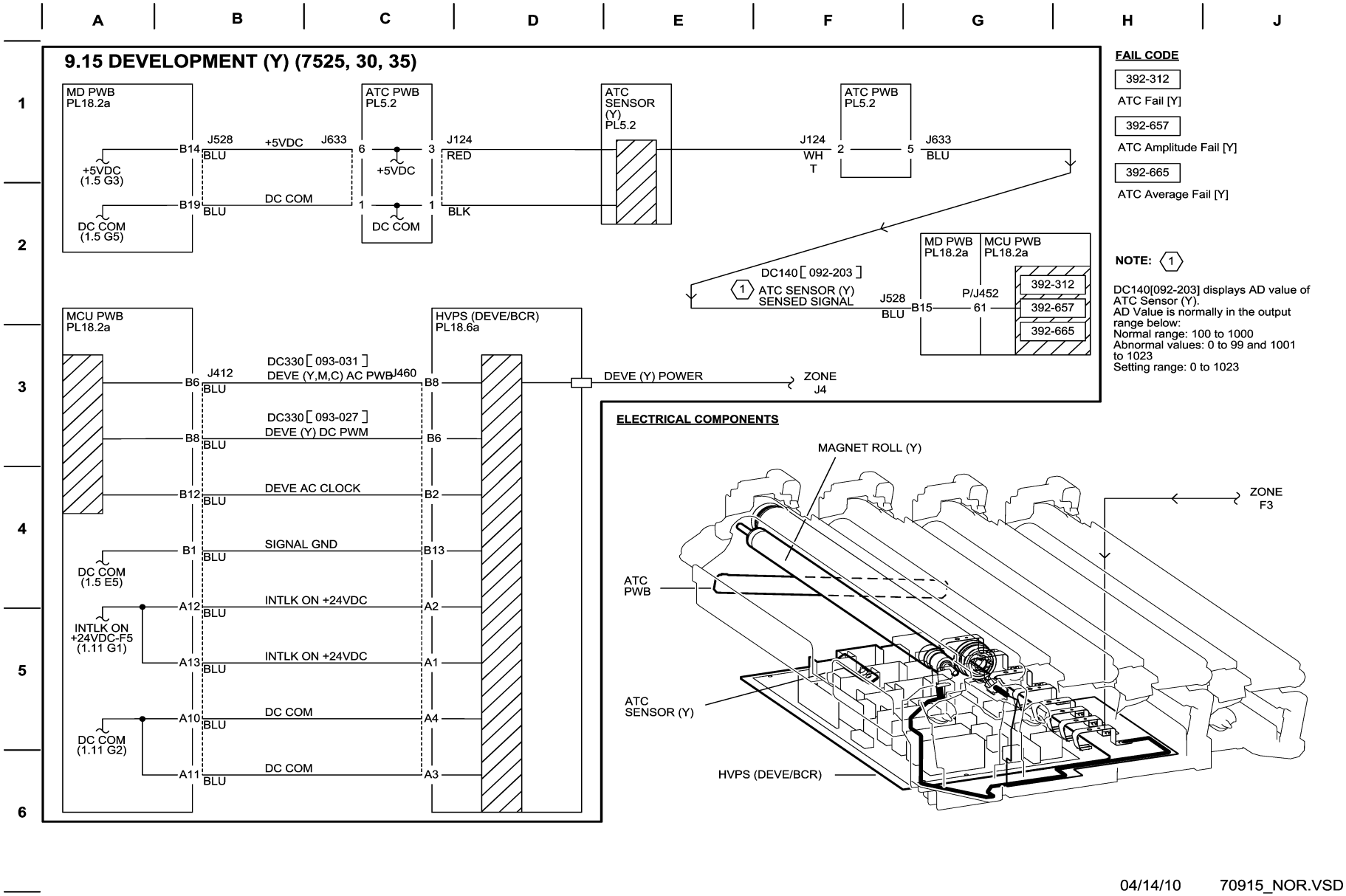

Figure 15 BSD 9.15 Development (Y) (7525,7530,7535)

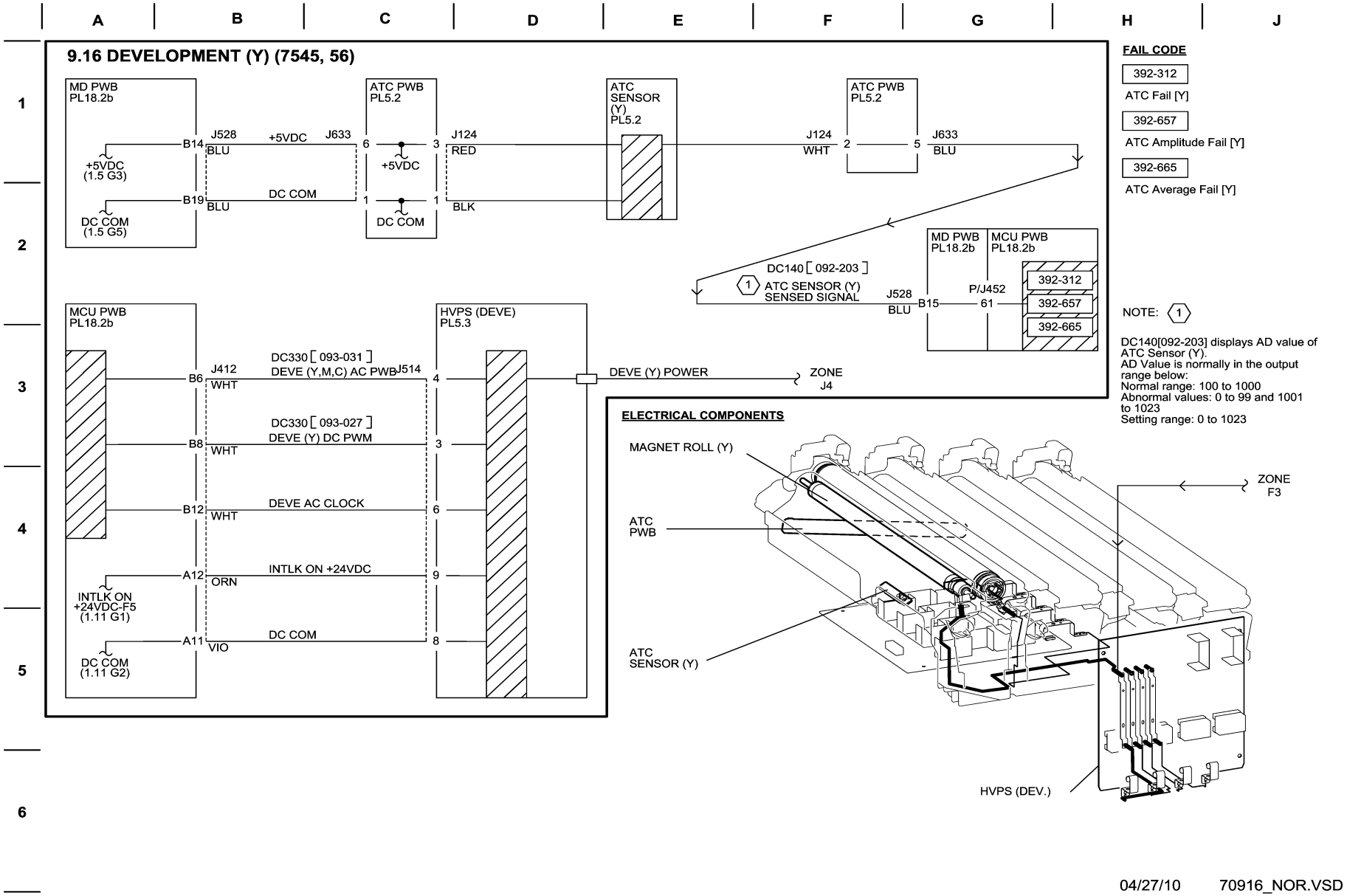

Figure 16 BSD 9.16 Development (Y) (7545,7556)

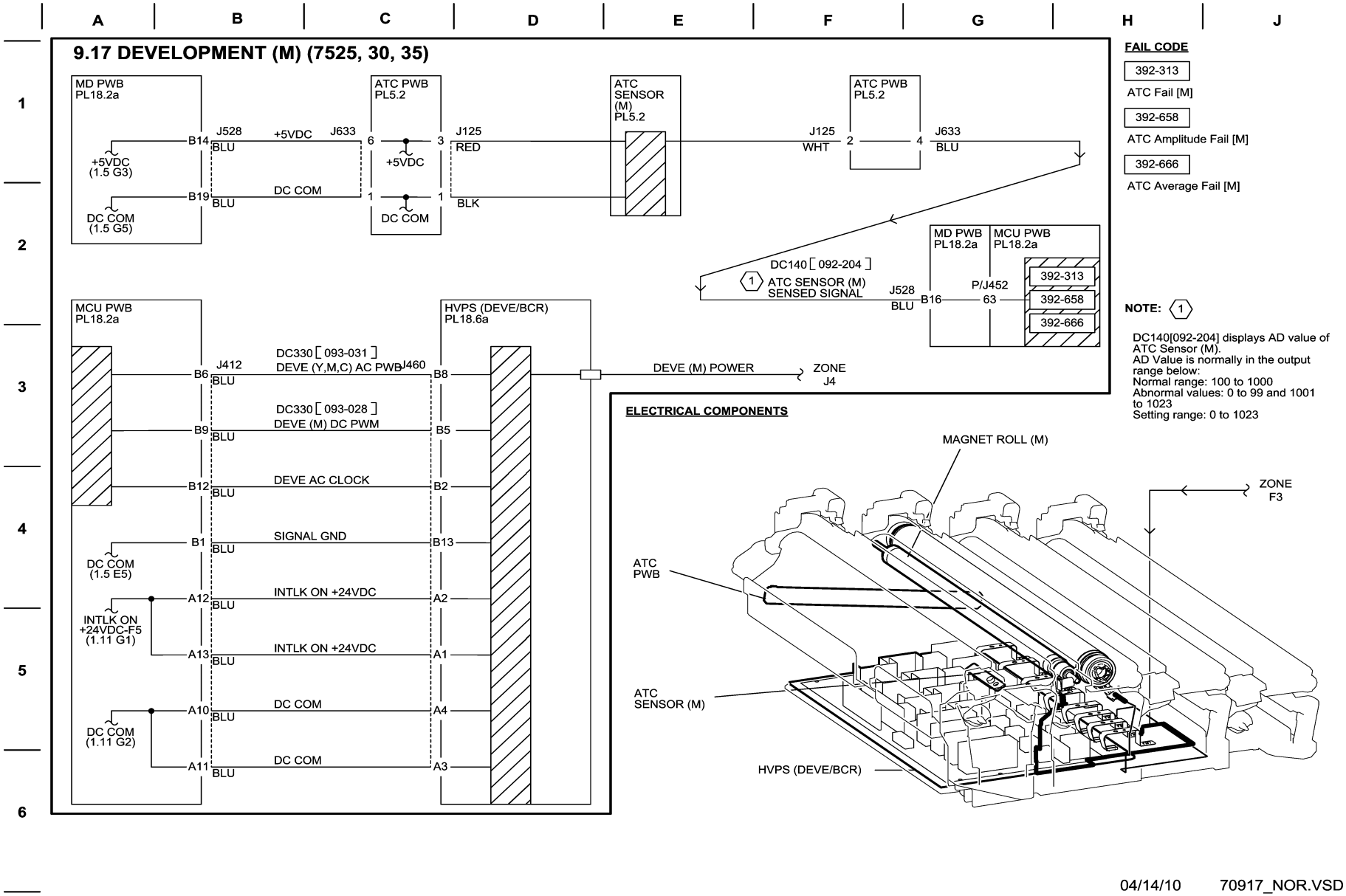

Figure 17 BSD 9.17 Development (M) (7525,7530,7535)

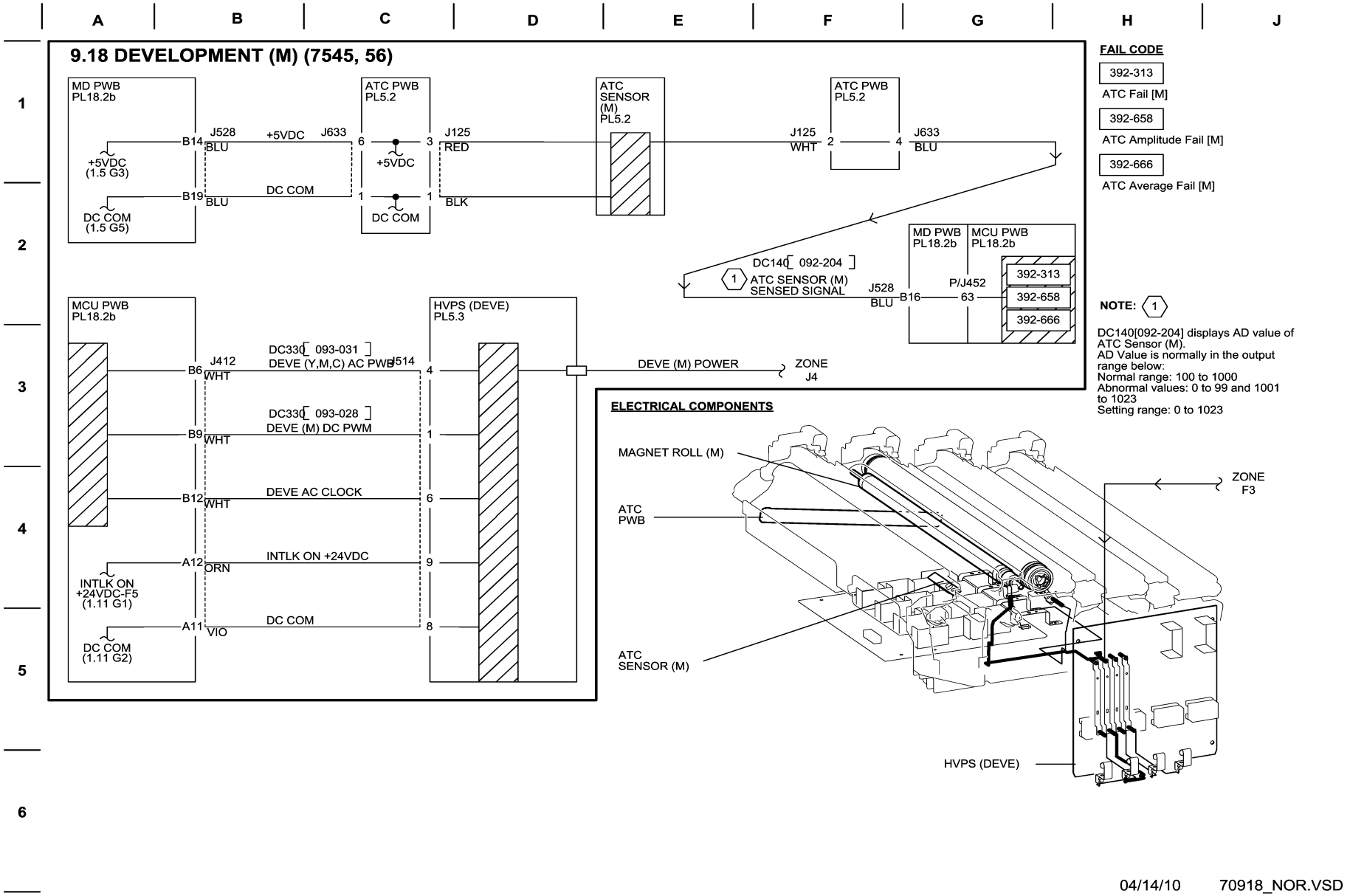

Figure 18 BSD 9.18 Development (M) (7545,7556)

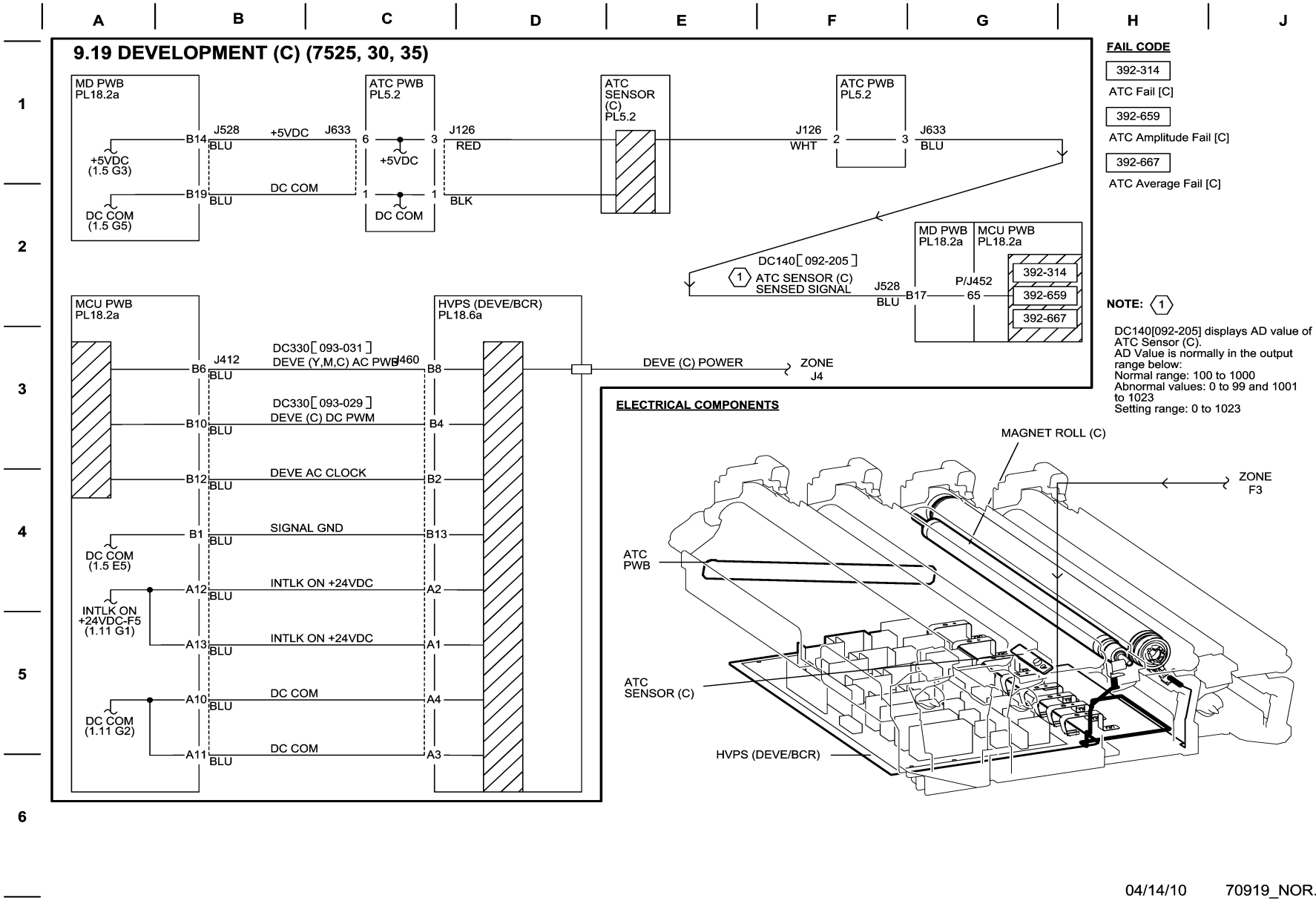

Figure 19 BSD 9.19 Development (C) (7525,7530,7535)

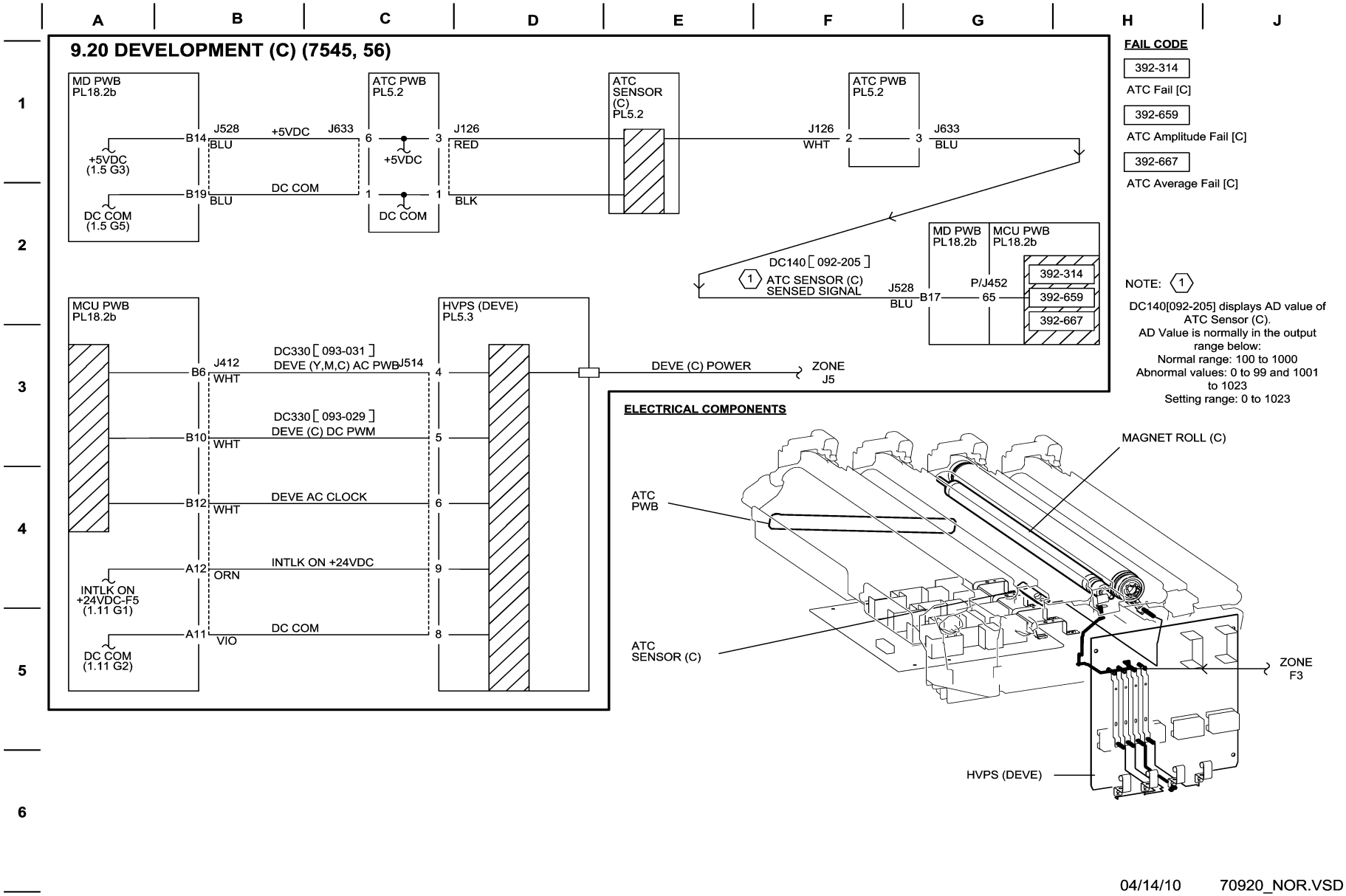

Figure 20 BSD 9.20 Development (C) (7545,7556)

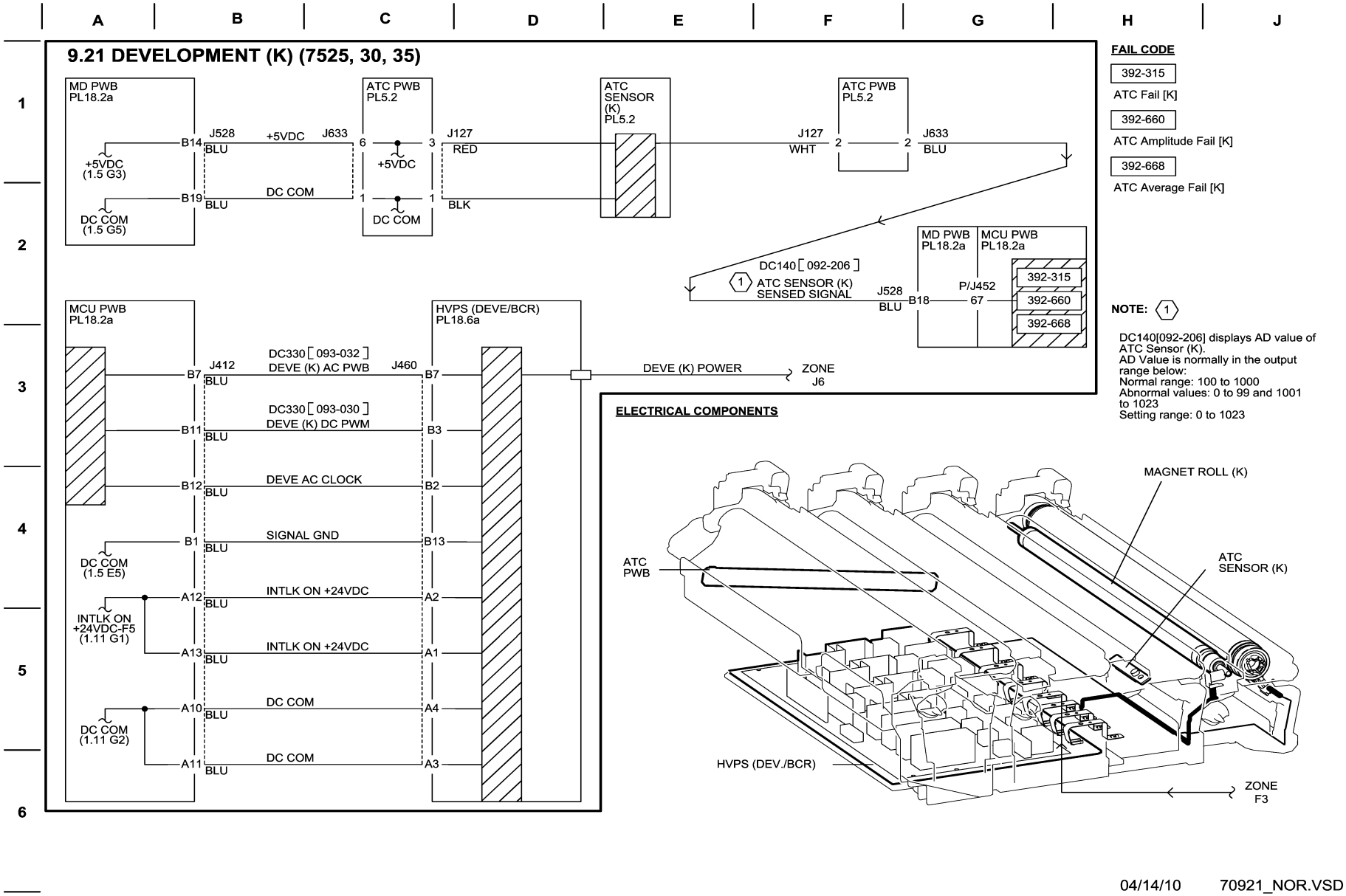

Figure 21 BSD 9.21 Development (K) (7525,7530,7535)

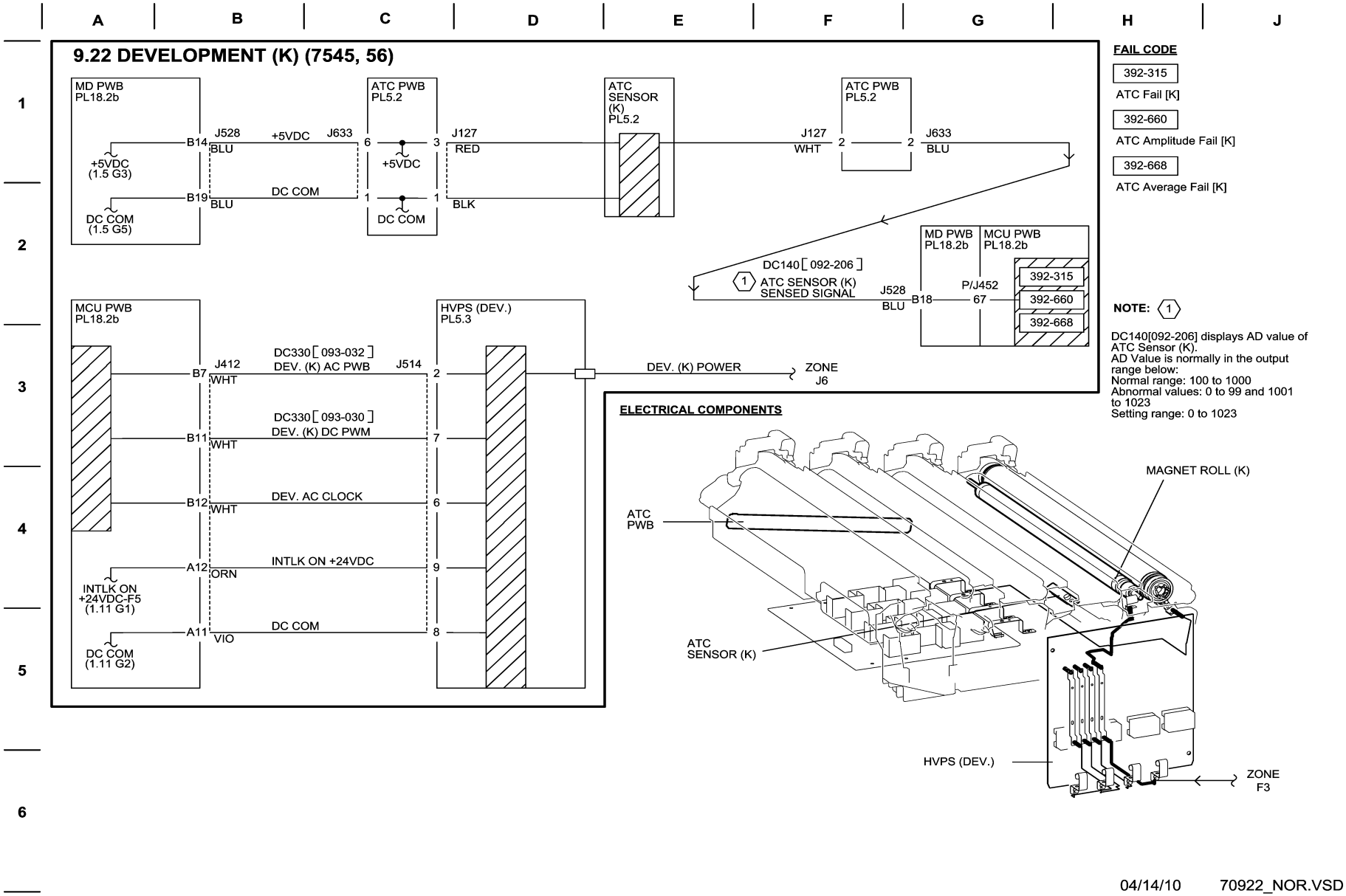

Figure 22 BSD 9.22 Development (K) (7545,7556)

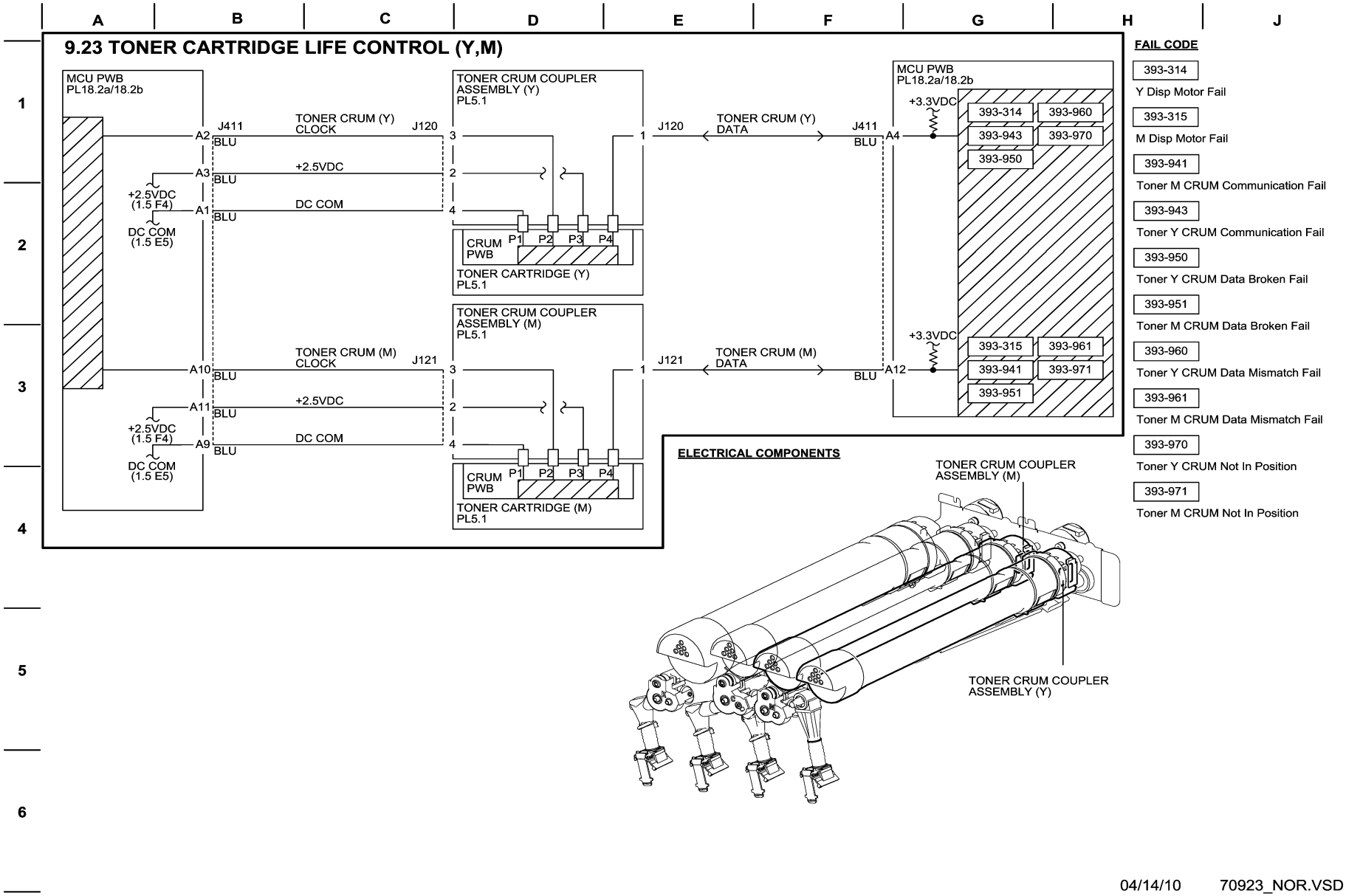

Figure 23 BSD 9.23 Toner Cartridge Life Control (Y,M)

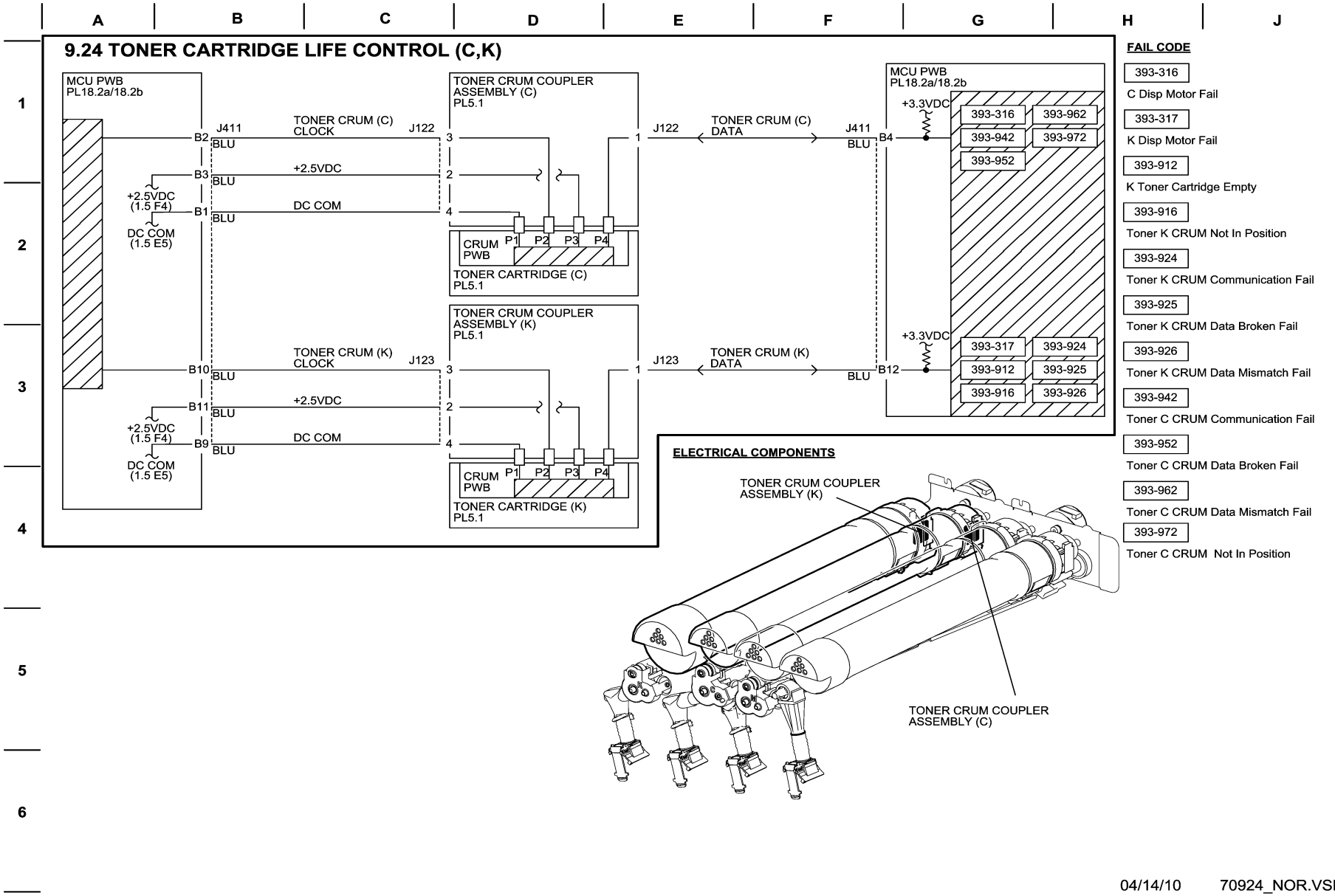

Figure 24 BSD 9.24 Toner Cartridge Life Control (C,K)

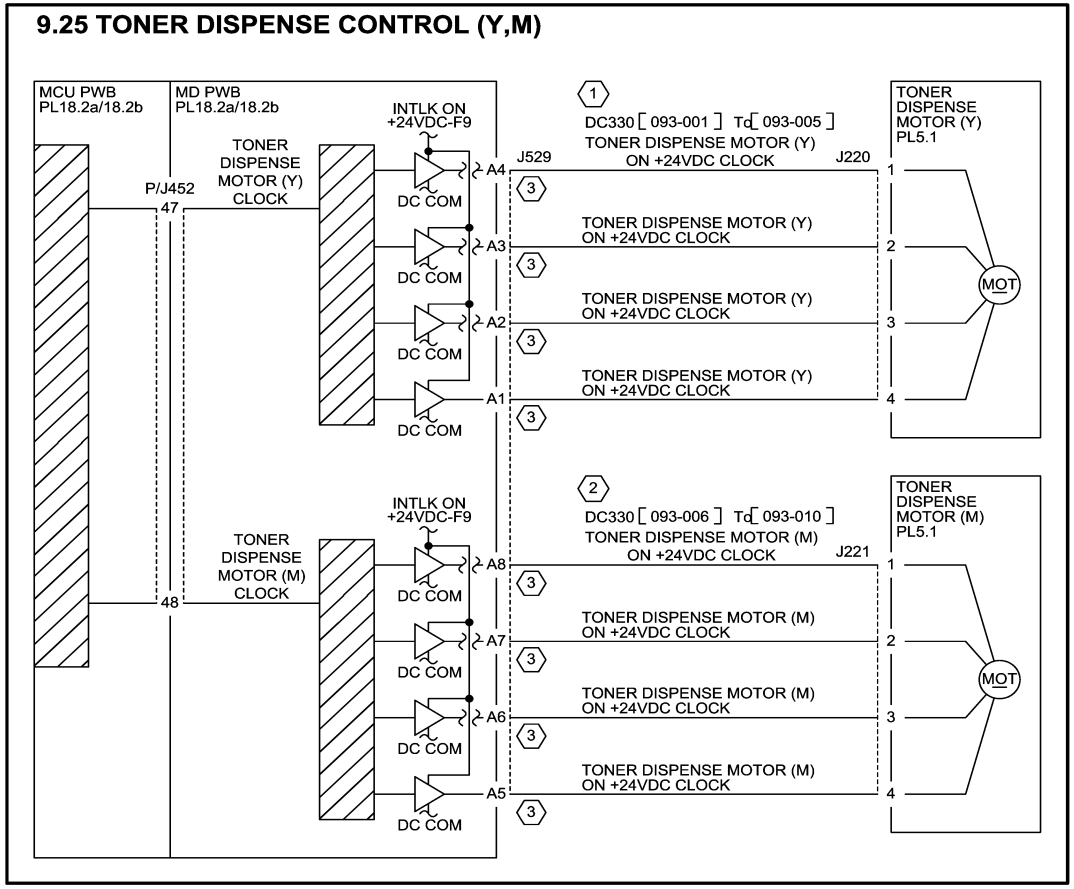

ELECTRICAL COMPONENTS

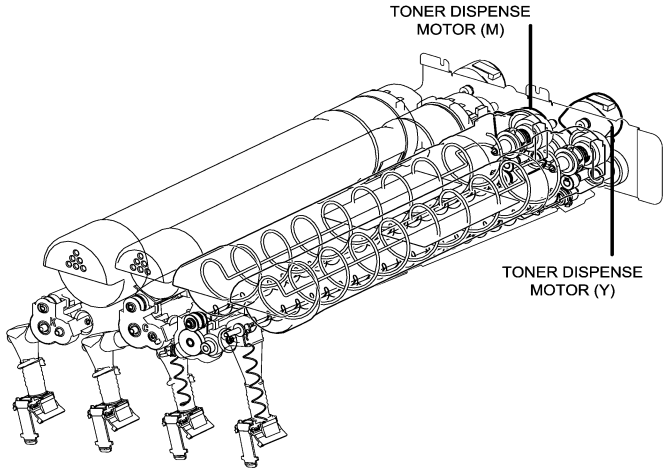

NOTE:

(1) The operation speed varies depending on the diag code.

TONER DISPENSE MOTOR (Y)	Operation Speed
DC330[093-001]	79mm/sec
DC330[093-002]	121mm/sec
DC330[093-003]	175mm/sec
DC330[093-004]	200mm/sec
DC330[093-005]	225mm/sec

(2) The operation speed varies depending on the diag code.

TONER DISPENSE MOTOR (M)	operation Speed
DC330[093-006]	79mm/sec
DC330[093-007]	121mm/sec
DC330[093-008]	175mm/sec
DC330[093-009]	200mm/sec
DC330[093-010]	225mm/sec

(3) Wire Color varies depending on the model.
7525, 30, 35 : BLU
7545, 56 : WHT

04/16/10 70925_NOR.VSD

Figure 25 BSD 9.25 Toner Dispense Control (Y,M)

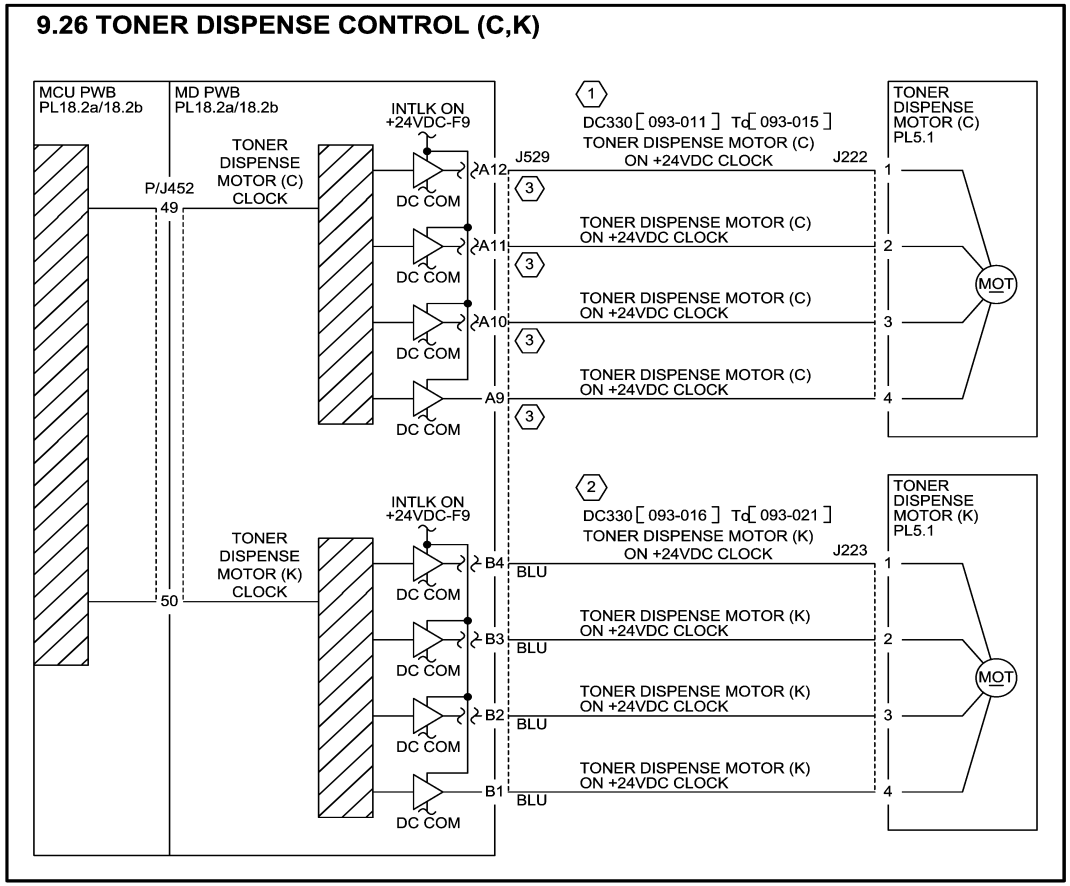

ELECTRICAL COMPONENTS

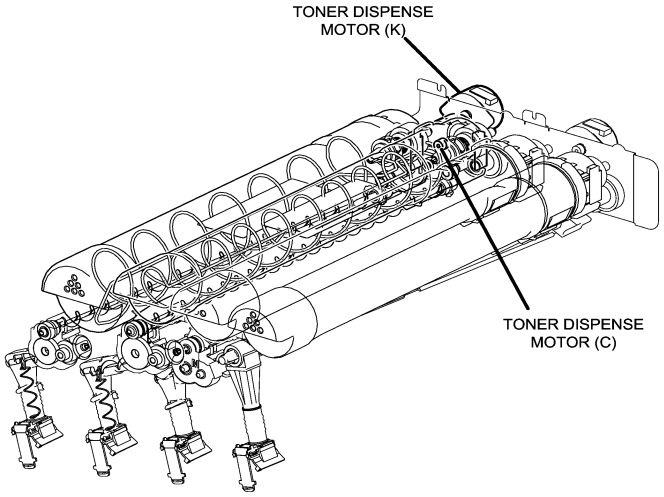

NOTE: (1) The operation speed varies depending on the diag code.

TONER DISPENSE MOTOR (C)	Operation Speed
DC330[093-011]	79mm/sec
DC330[093-012]	121mm/sec
DC330[093-013]	175mm/sec
DC330[093-014]	200mm/sec
DC330[093-015]	225mm/sec

(2) The operation speed varies depending on the diag code.

TONER DISPENSE MOTOR (K)	Operation Speed
DC330[093-016]	79mm/sec
DC330[093-017]	121mm/sec
DC330[093-018]	175mm/sec
DC330[093-019]	200mm/sec
DC330[093-020]	225mm/sec
DC330[093-021]	255mm/sec

(3) Wire Color varies depending on the model.
7525, 30, 35 : BLU
7545, 56 : WHT

04/16/10 70926_NOR.VSD

Figure 26 BSD 9.26 Toner Dispense Control (C,K)

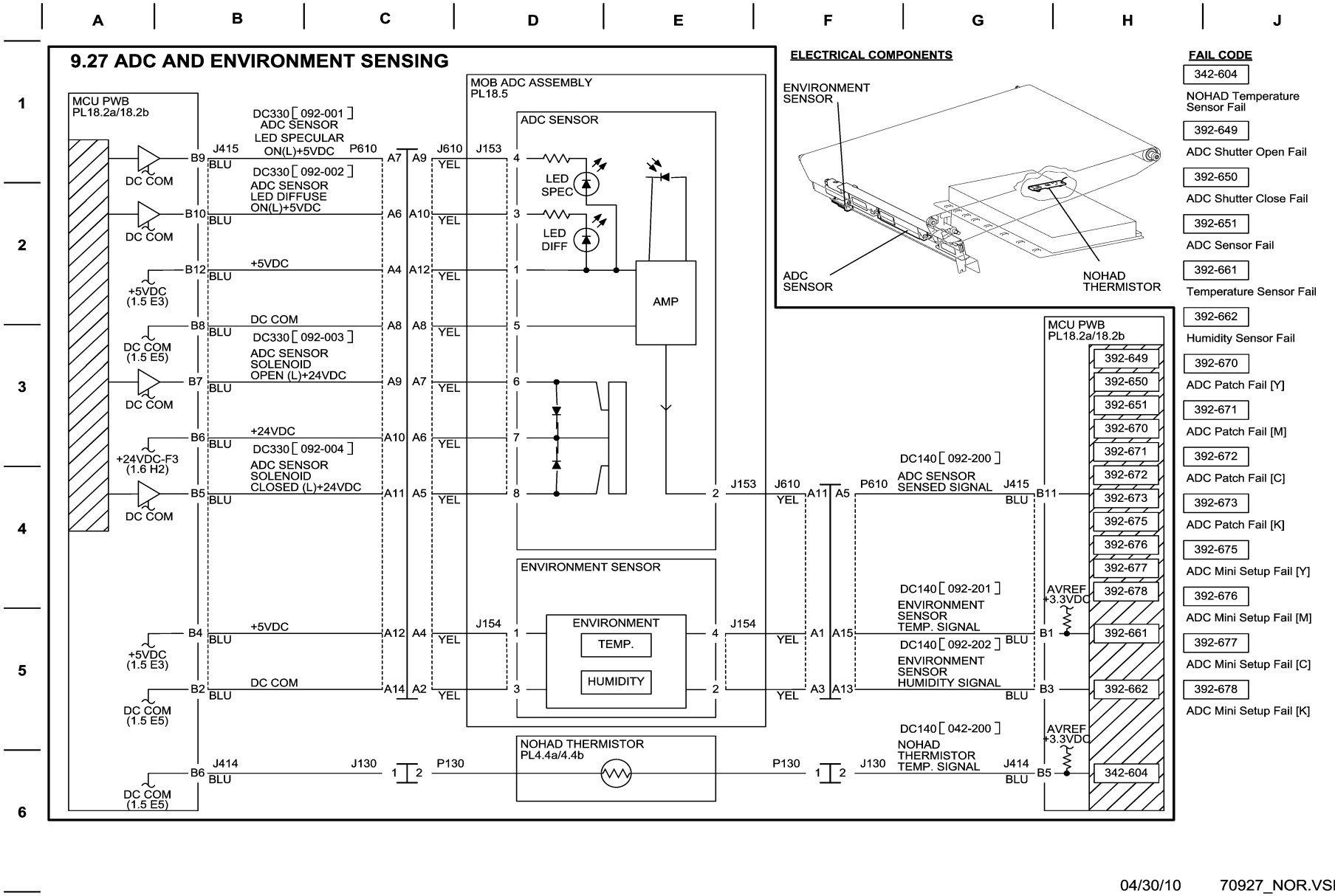

Figure 27 BSD 9.27 ADC and Environment Sensing

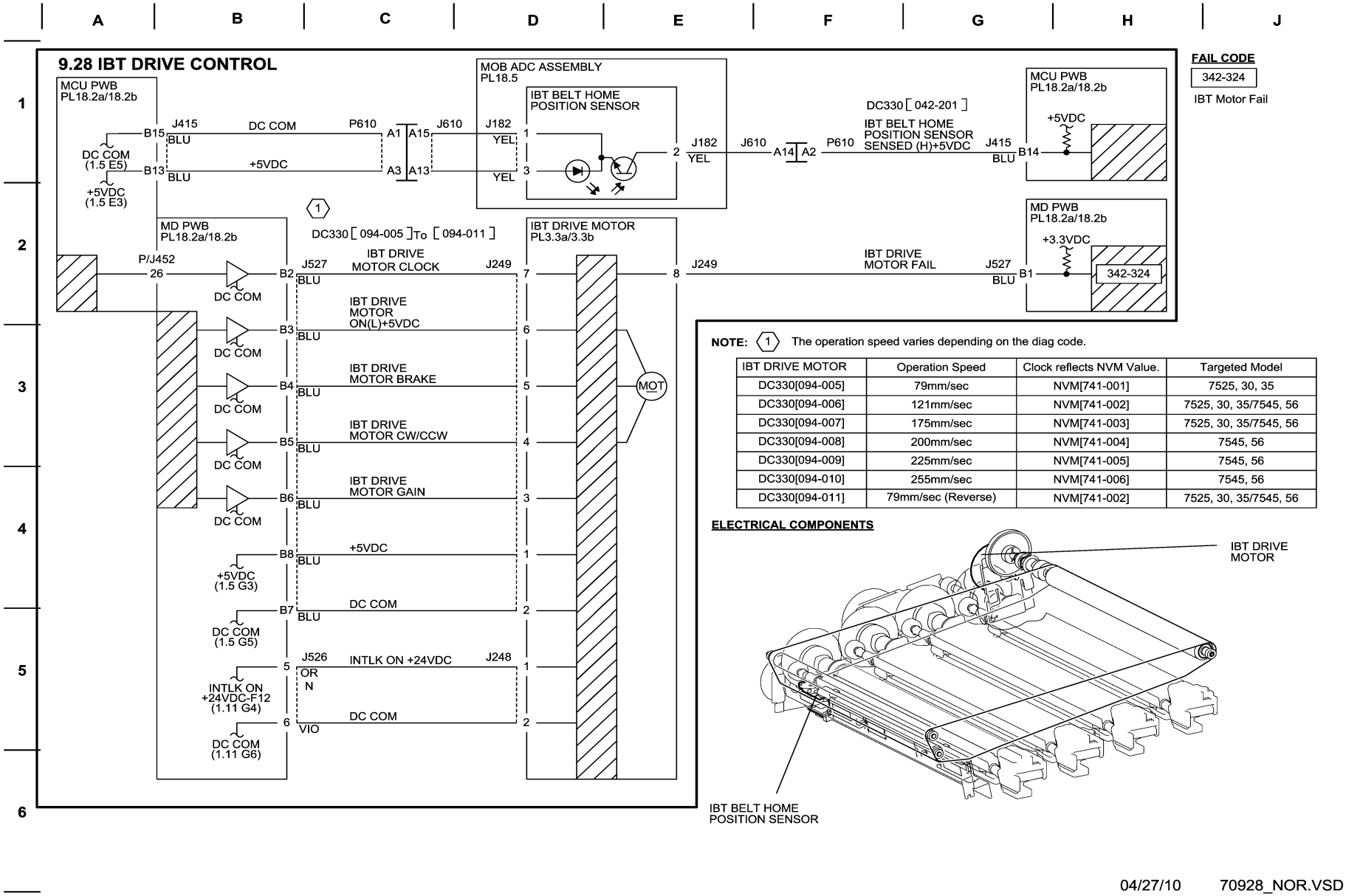

IBT DRIVE MOTOR	Operation Speed	Clock reflects NVM Value.	Targeted Model
DC330[094-005]	79mm/sec	NVM[741-001]	7525, 30, 35
DC330[094-006]	121mm/sec	NVM[741-002]	7525, 30, 35/7545, 56
DC330[094-007]	175mm/sec	NVM[741-003]	7525, 30, 35/7545, 56
DC330[094-008]	200mm/sec	NVM[741-004]	7545, 56
DC330[094-009]	225mm/sec	NVM[741-005]	7545, 56
DC330[094-010]	255mm/sec	NVM[741-006]	7545, 56
DC330[094-011]	79mm/sec (Reverse)	NVM[741-002]	7525, 30, 35/7545, 56

Figure 28 BSD 9.28 IBT Drive Control

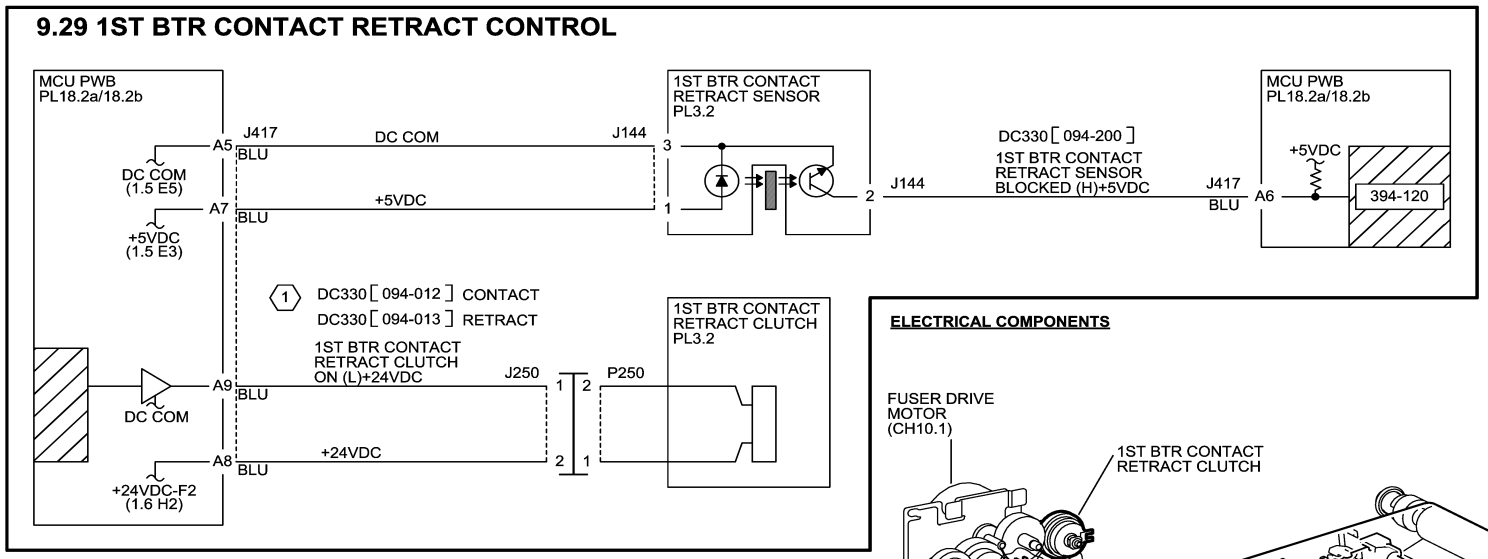

FAIL CODE

394-120

1st BTR Contact/Retract Fail

ELECTRICAL COMPONENTS

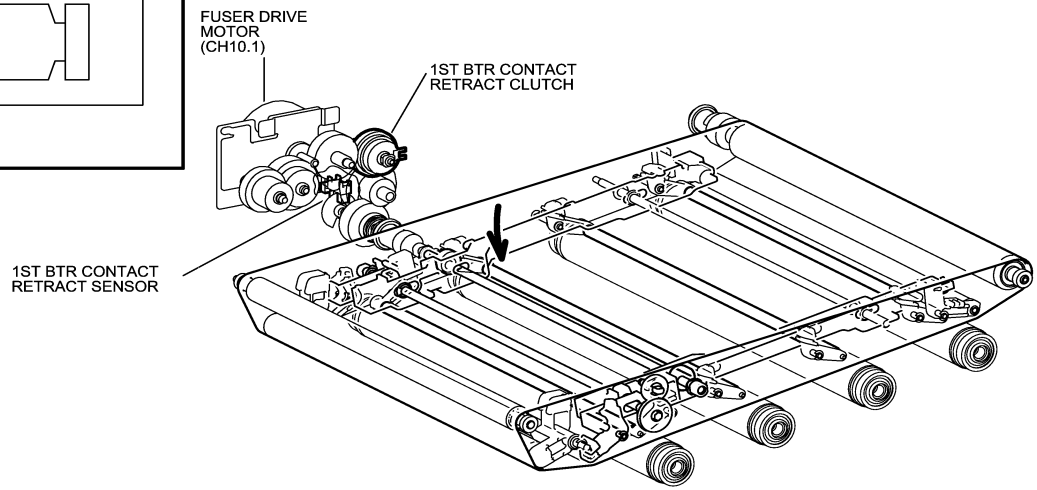

NOTE:

1 The table shows the relation between diag code and operation.

1ST BTR CONTACT RETRACT	Operation
DC330[094-012]	The Contact operation of 1st BTRTurns ON Fuser Motor at a speed of 121mm/s to turn ON 1st BTR Contact Retract Clutch.Detects the Contact position with 1st BTR Contact Retract Sensor and then stops Fuser Motor.
DC330[094-013]	The Retract operation of 1st BTRTurns ON Fuser Motor at a speed of 121mm/s to turn ON 1st BTR Contact Retract Clutch.Detects the Retract position with 1st BTR Contact Retract Sensor and then stops Fuser Motor.

01/03/12 70929_NOR.VSD

Figure 29 BSD 9.29 1st BTR Contact Retract Control

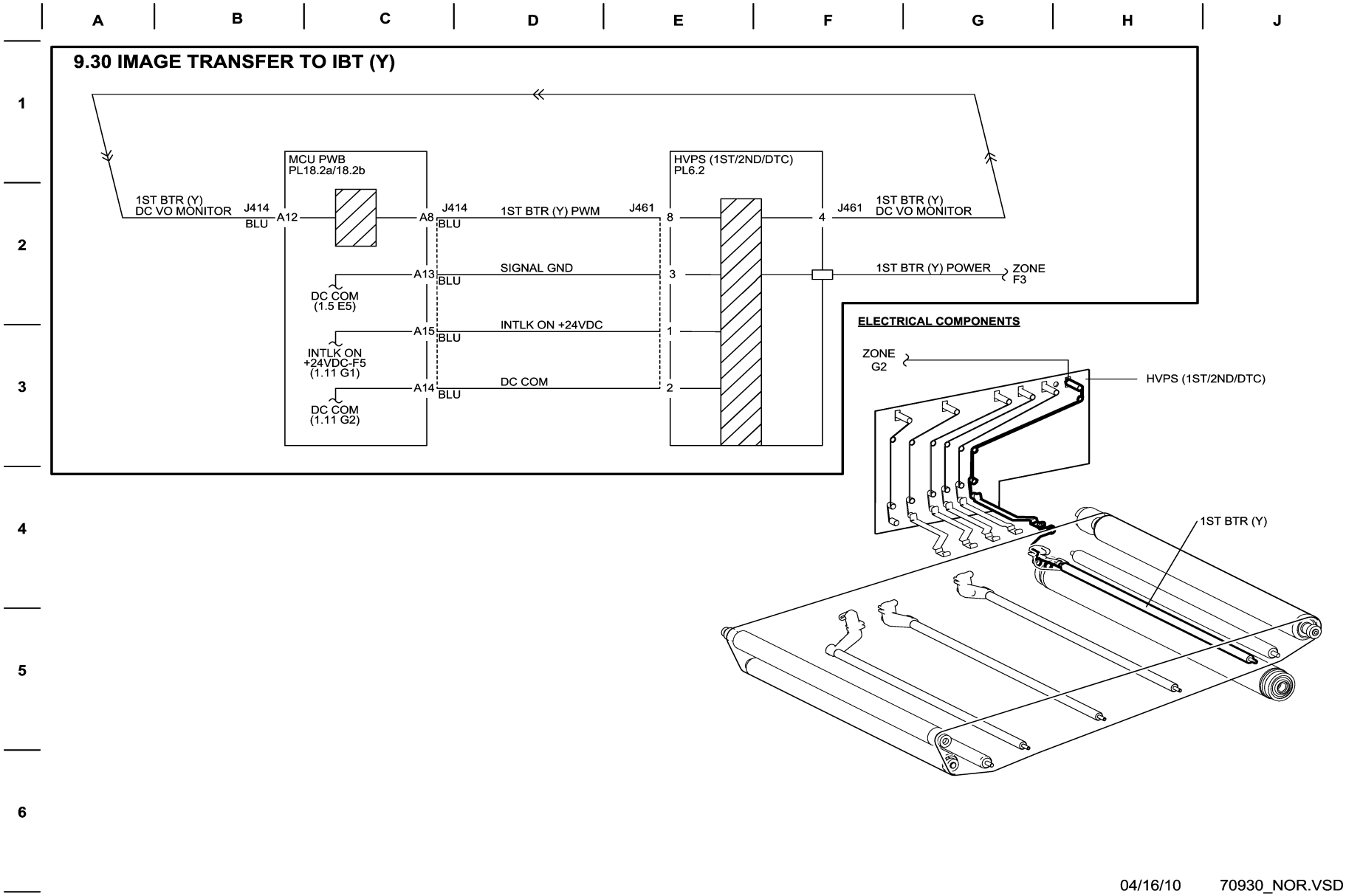

Figure 30 BSD 9.30 Image Transfer to IBT (Y)

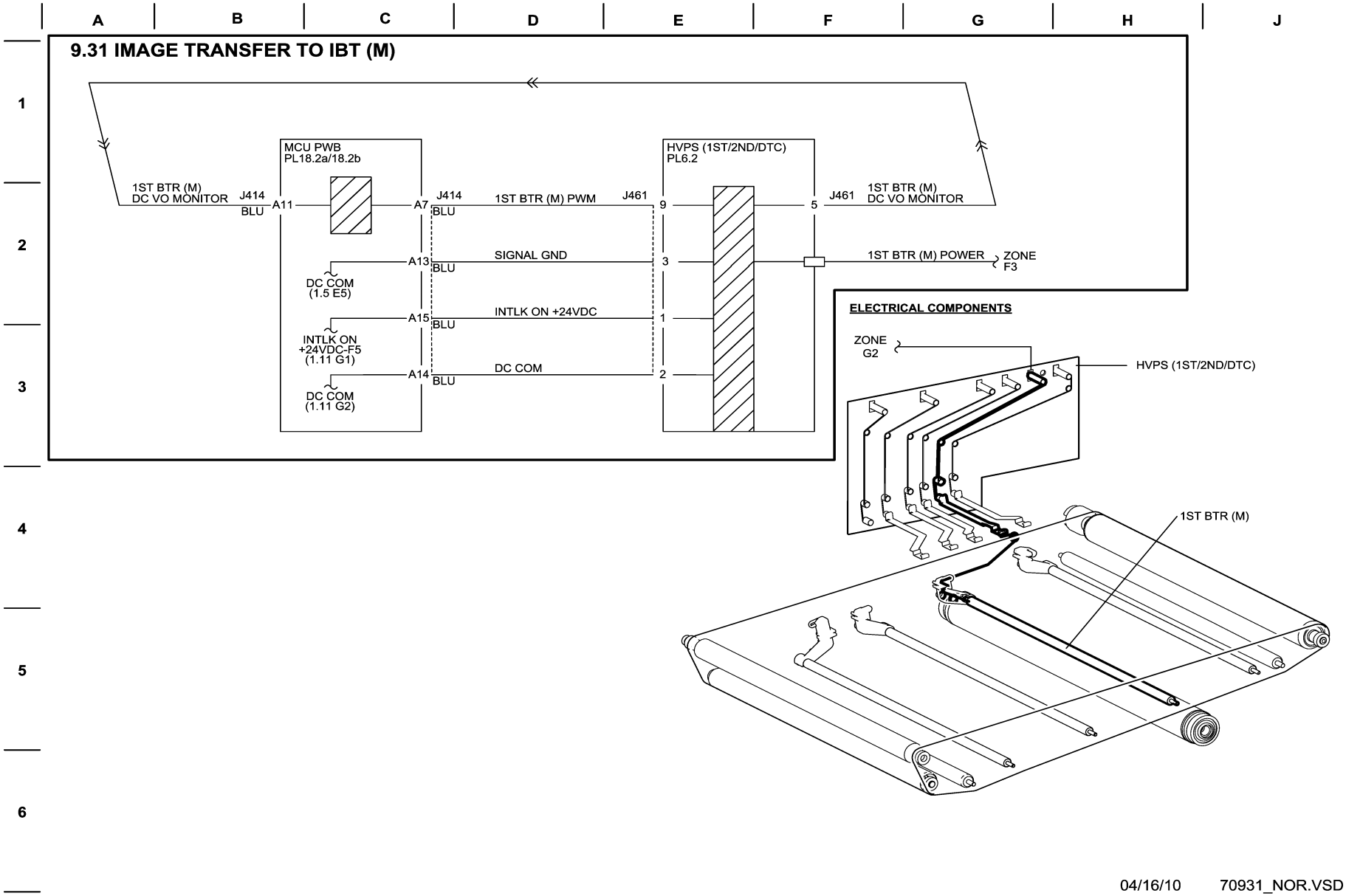

Figure 31 BSD 9.31 Image Transfer to IBT (M)

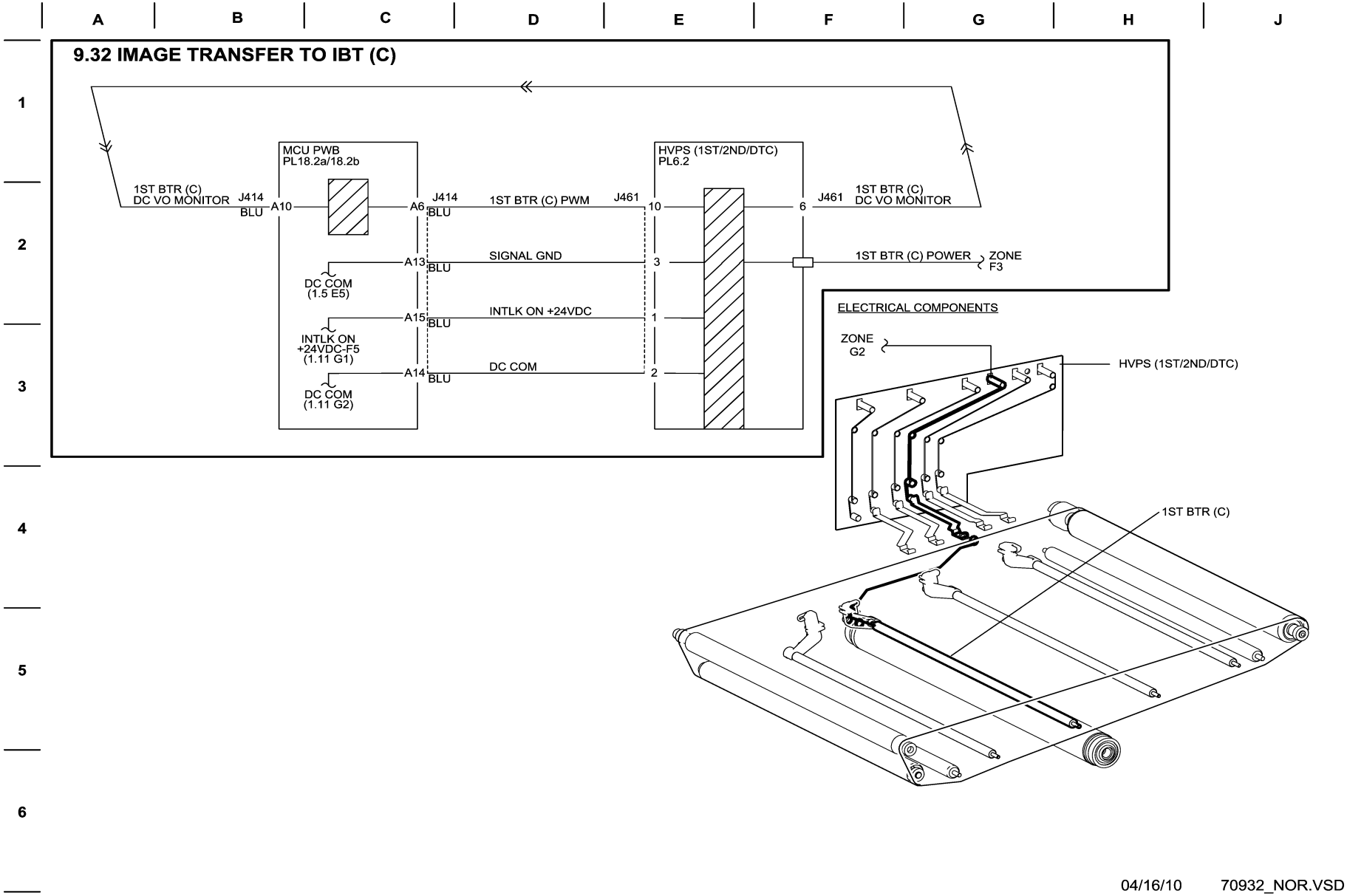

Figure 32 BSD 9.32 Image Transfer to IBT (C)

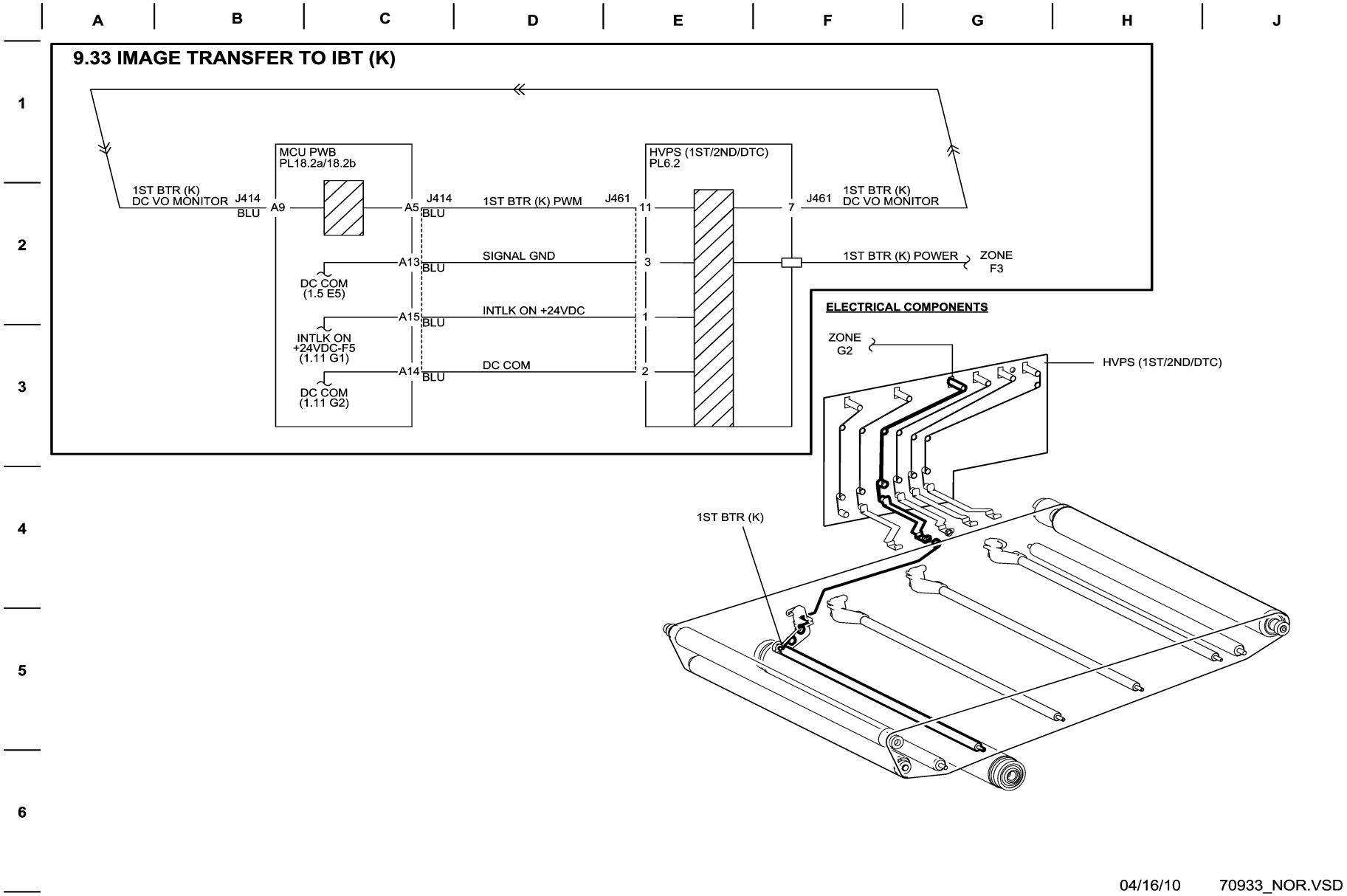

Figure 33 BSD 9.33 Image Transfer to IBT (K)

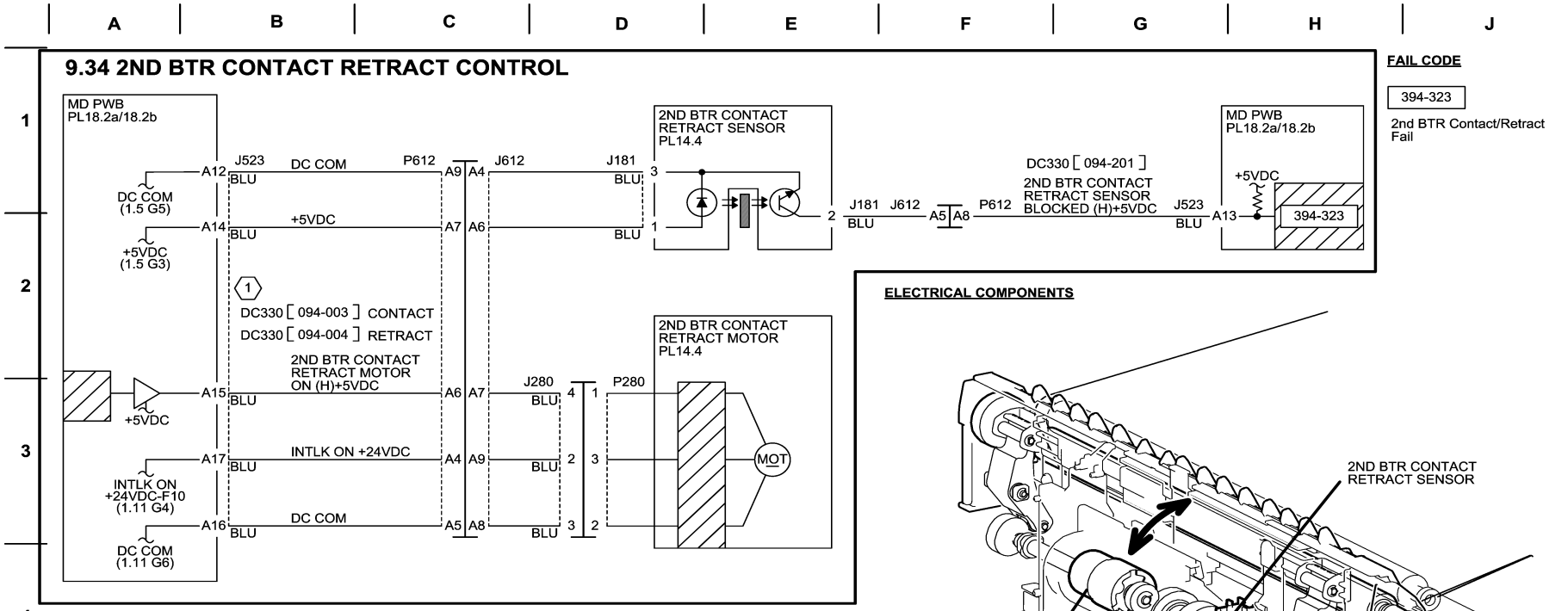

NOTE:

(1) The table shows the relation between diag code and operation.

2ND BTR CONTACT RETRACT	Operation
DC330[094-003]	The Contact operation of 2nd BTRTurns ON 2nd BTR Contact Retract Motor at a speed of 121mm/s. Detects the Contact position with 2nd BTR Contact Retract Sensor and then stops 2nd BTR Contact Retract Motor.
DC330[094-004]	The Retract operation of 2nd BTRTurns ON 2nd BTR Contact Retract Motor at a speed of 121mm/s. Detects the Retract position with 2nd BTR Contact Retract Sensor and then stops 2nd BTR Contact Retract Motor.

04/16/10 70934_NOR.VSD

Figure 34 BSD 9.34 2nd BTR Contact Retract Control

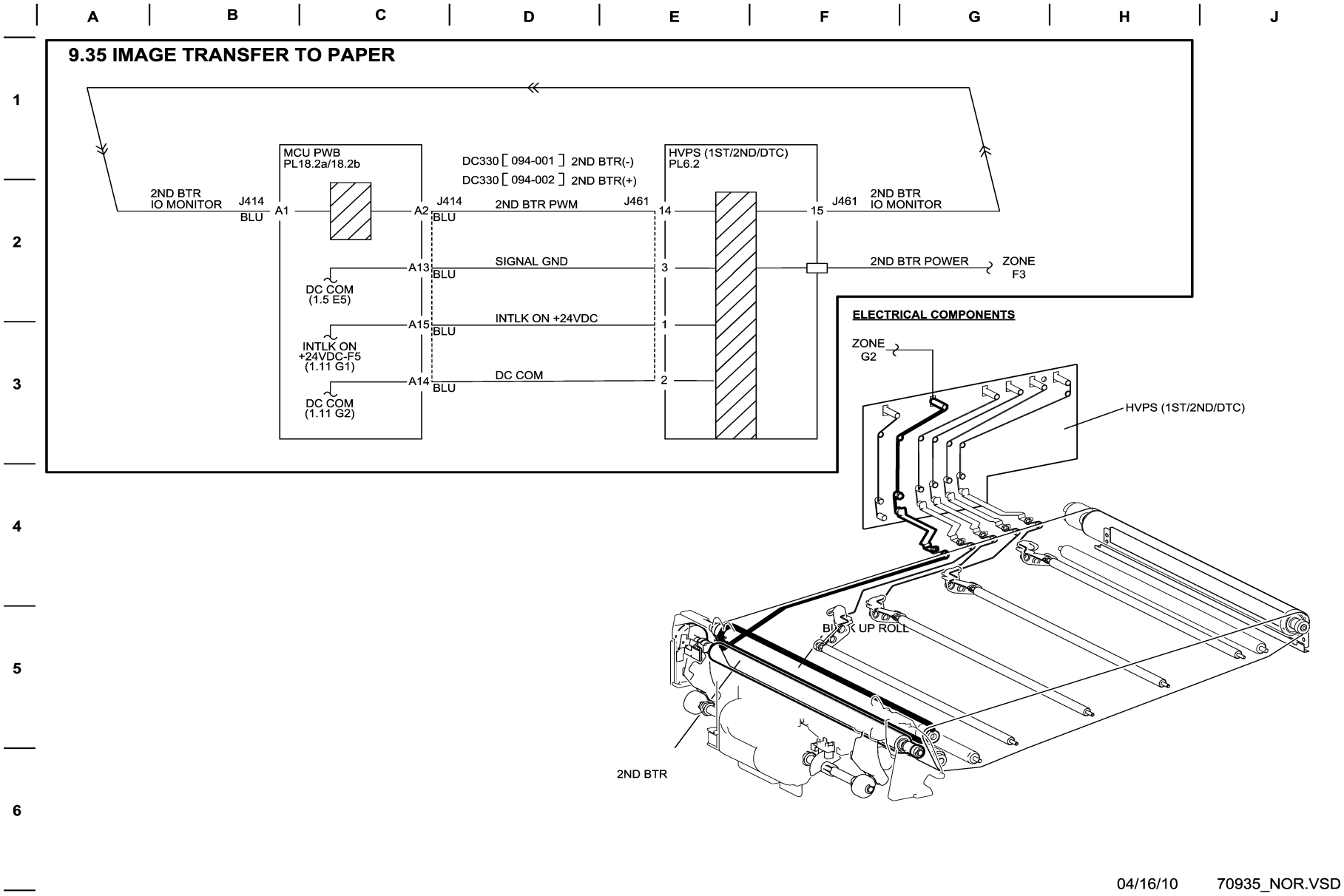

Figure 35 BSD 9.35 Image Transfer to Paper

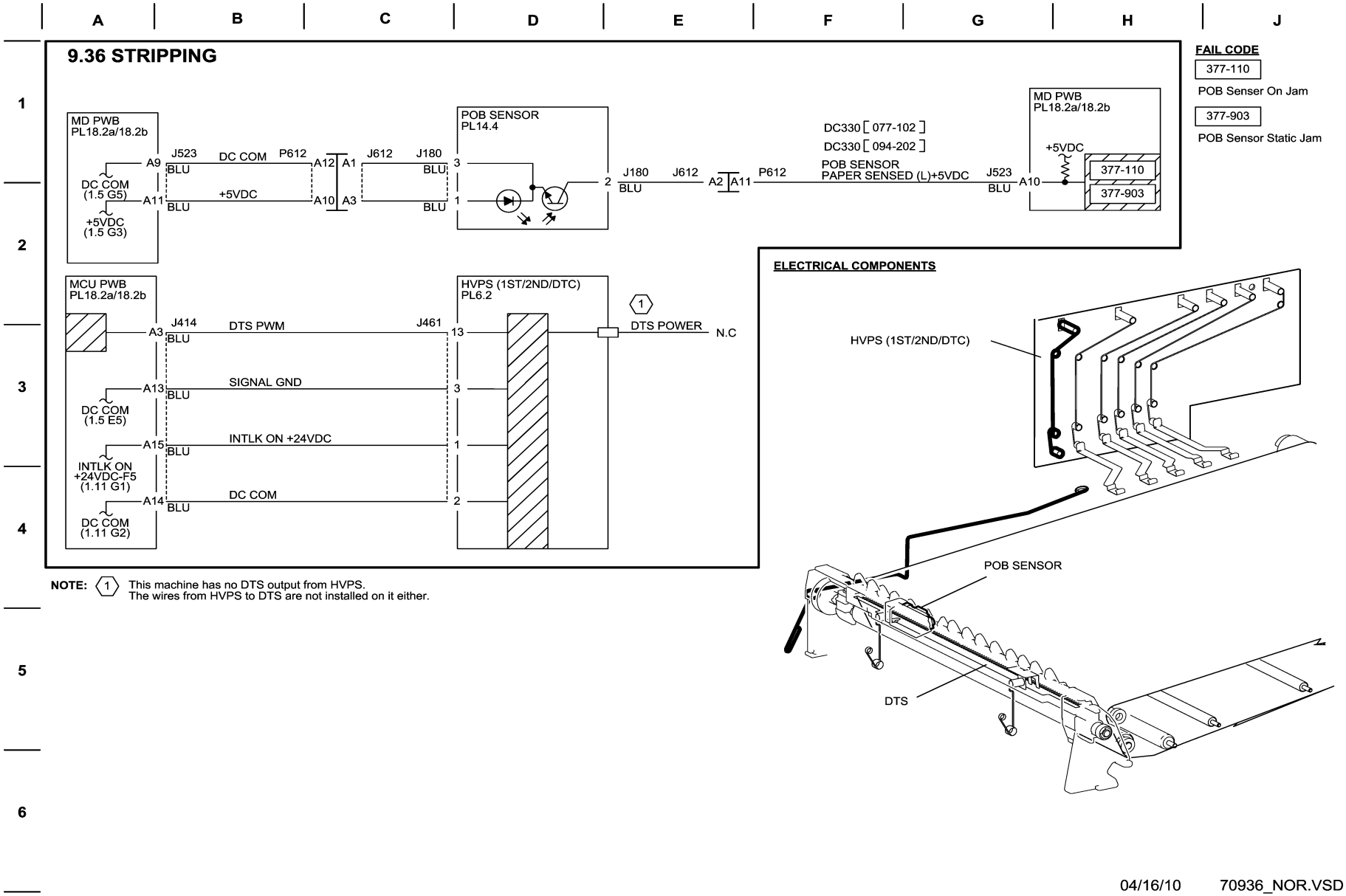

Figure 36 BSD 9.36 Stripping

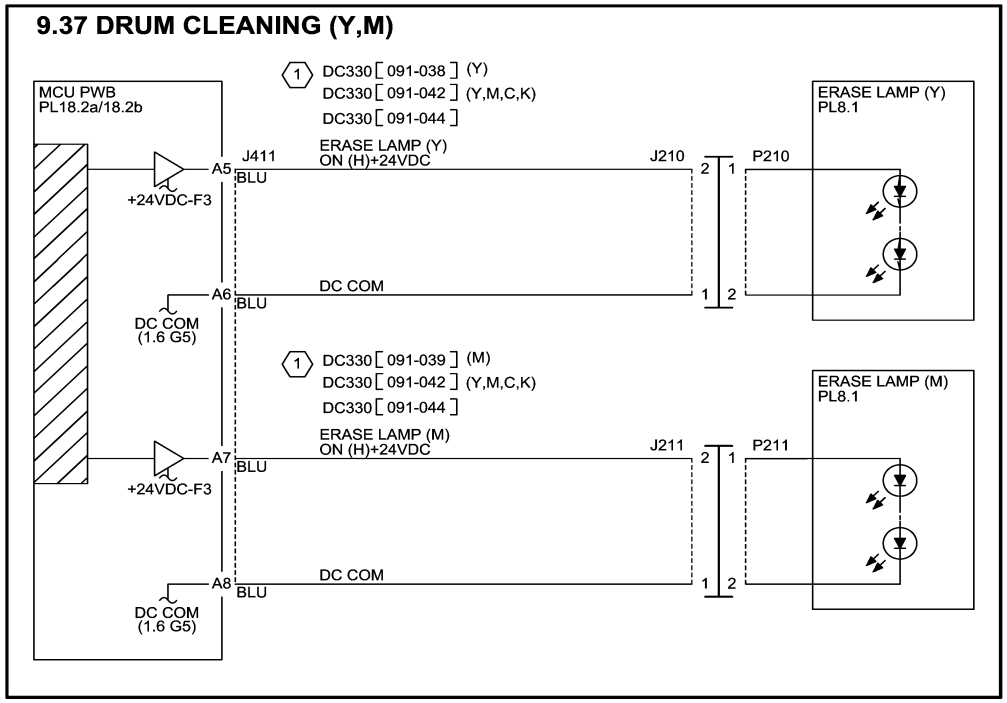

NOTE: 1 The operation varies depending on the diag code.

ERASE LAMP	Operation
DC330[091-038]	Makes Erase Lamp (Y) emit light.
DC330[091-039]	Makes Erase Lamp (M) emit light.
DC330[091-042]	Makes Erase Lamp (Y/M/C/K) emit light.
DC330[091-044]	"Multiple-Component Control" Drum Deve Mot. YMC P/S operates at speed set in NVM[Drum YMC Motor Speed Fine Adj. 121/175 Speed 2] and Drum Deve Mot. K P/S at speed set in NVM[Drum K Motor Speed Fine Adj. 121/175 Speed 2]. IBT Mot. P/S operates at 121/175 (mm/s). "BCR AC/DC Output: Vcln Output" Drum/Deve Mot. YMCK, IBT Mot., Erase Lamp YMCK, Agitator Mot., and BCR AC YMCK are simultaneously output.An elapse of 50ms after the start, BCR DC YMCK is output.An elapse of 540ms (121 speed)/400ms (175 speed) after the start, Erase Lamp is stopped. 300ms (121 speed)/ 200ms (175 speed) after that, BCR AC/DC is stopped. NVM (nxero_DrumRefreshTime)[s] after the start, all are stopped.

ELECTRICAL COMPONENTS

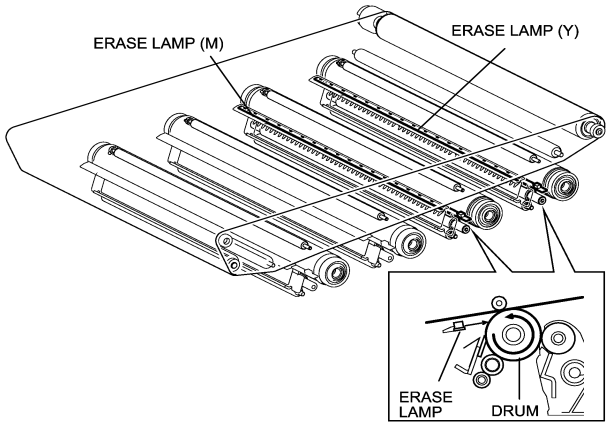

04/19/10 70937_NOR.VSD

Figure 37 BSD 9.37 Drum Cleaning (Y,M)

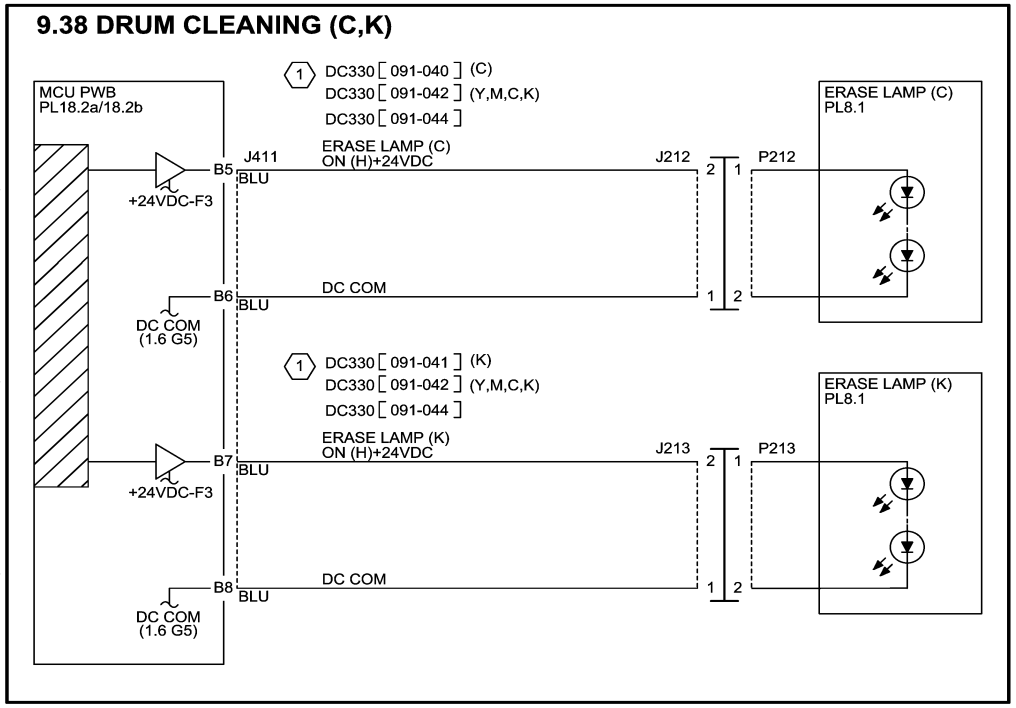

NOTE: (1) The operation varies depending on the diag code.

ERASE LAMP	Operation
DC330[091-040]	Makes Erase Lamp (Y) emit light.
DC330[091-041]	Makes Erase Lamp (M) emit light.
DC330[091-042]	Makes Erase Lamp (Y/M/C/K) emit light.
DC330[091-044]	"Multiple-Component Control" Drum Deve Mot. YMC P/S operates at speed set in NVM[Drum YMC Motor Speed Fine Adj. 121/175 Speed 2] and Drum Deve Mot. K P/S at speed set in NVM[Drum K Motor Speed Fine Adj. 121/175 Speed 2]. IBT Mot. P/S operates at 121/175 (mm/s). "BCR AC/DC Output: Vcln Output" Drum/Deve Mot. YMCK, IBT Mot., Erase Lamp YMCK, Agitator Mot., and BCR AC YMCK are simultaneously output.An elapse of 50ms after the start, BCR DC YMCK is output.An elapse of 540ms (121 speed)/400ms (175 speed) after the start, Erase Lamp is stopped. 300ms (121 speed)/200ms (175 speed) after that, BCR AC/DC is stopped. NVM (nxero_DrumRefreshTime)[s] after the start, all are stopped.

ELECTRICAL COMPONENTS

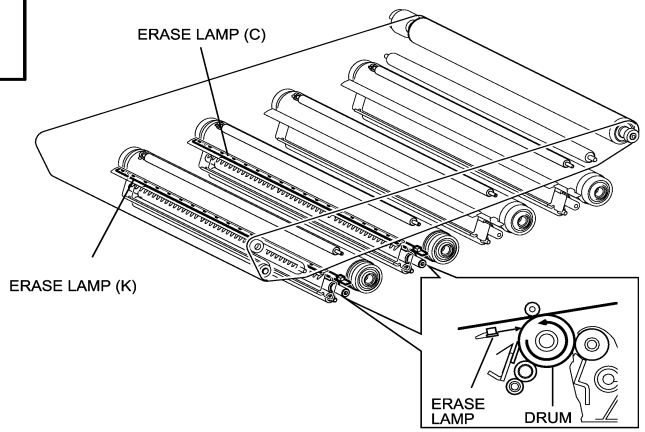

04/19/10 70938_NOR.VSD

Figure 38 BSD 9.38 Drum Cleaning (C,K)

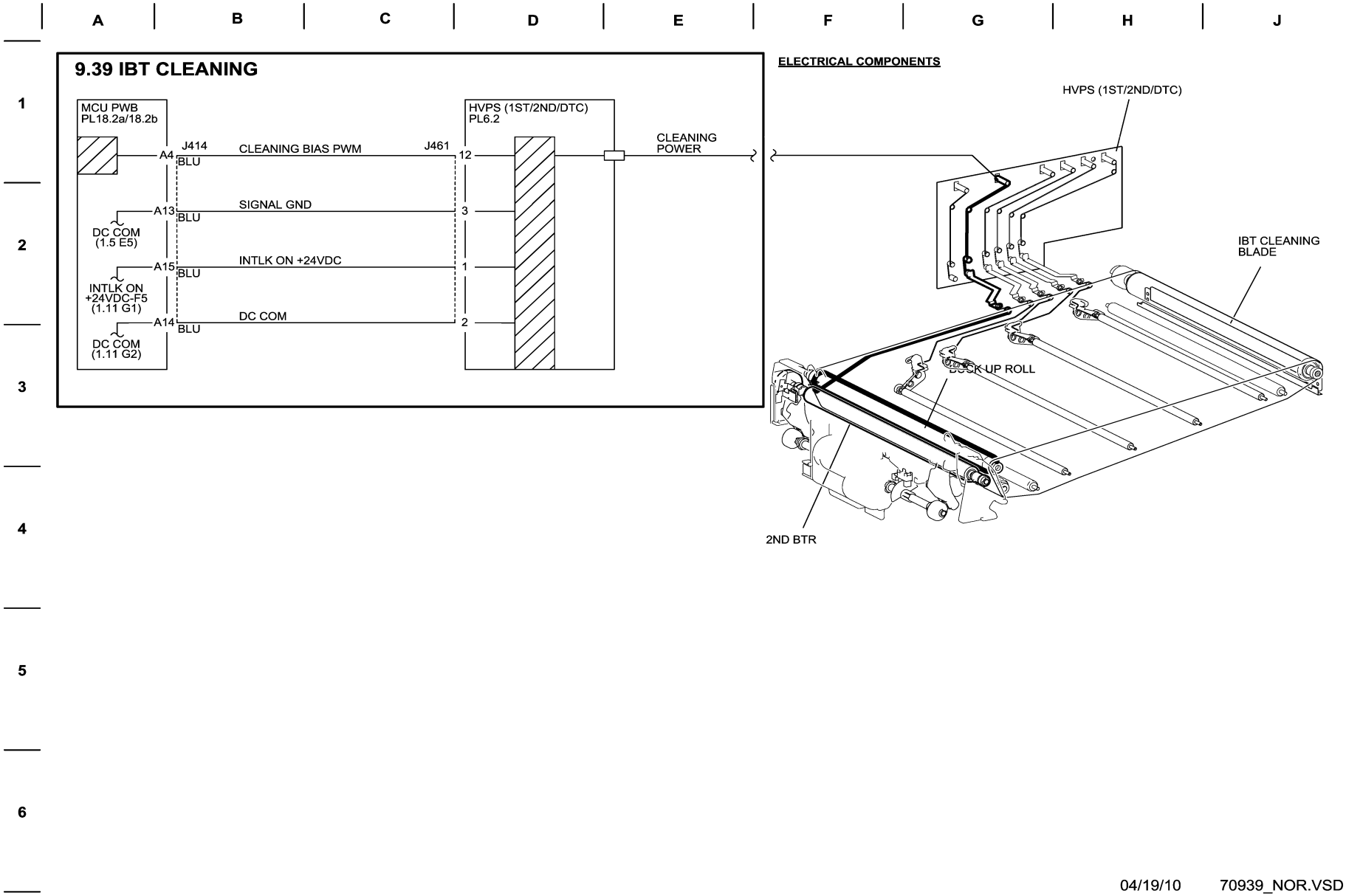

04/19/10 70939_NOR.VSD

Figure 39 BSD 9.39 IBT Cleaning

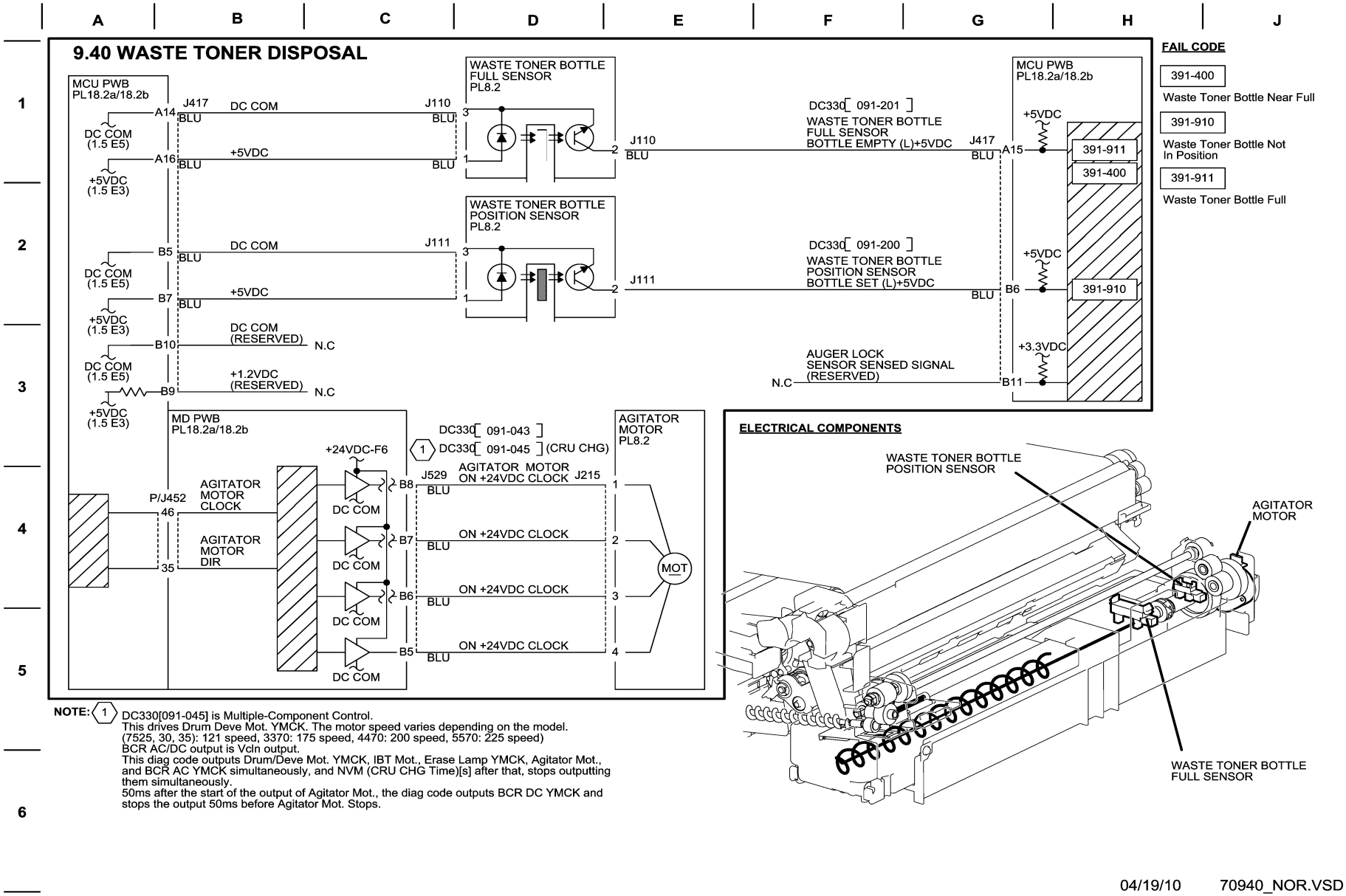

Figure 40 BSD 9.40 Waste Toner Disposal

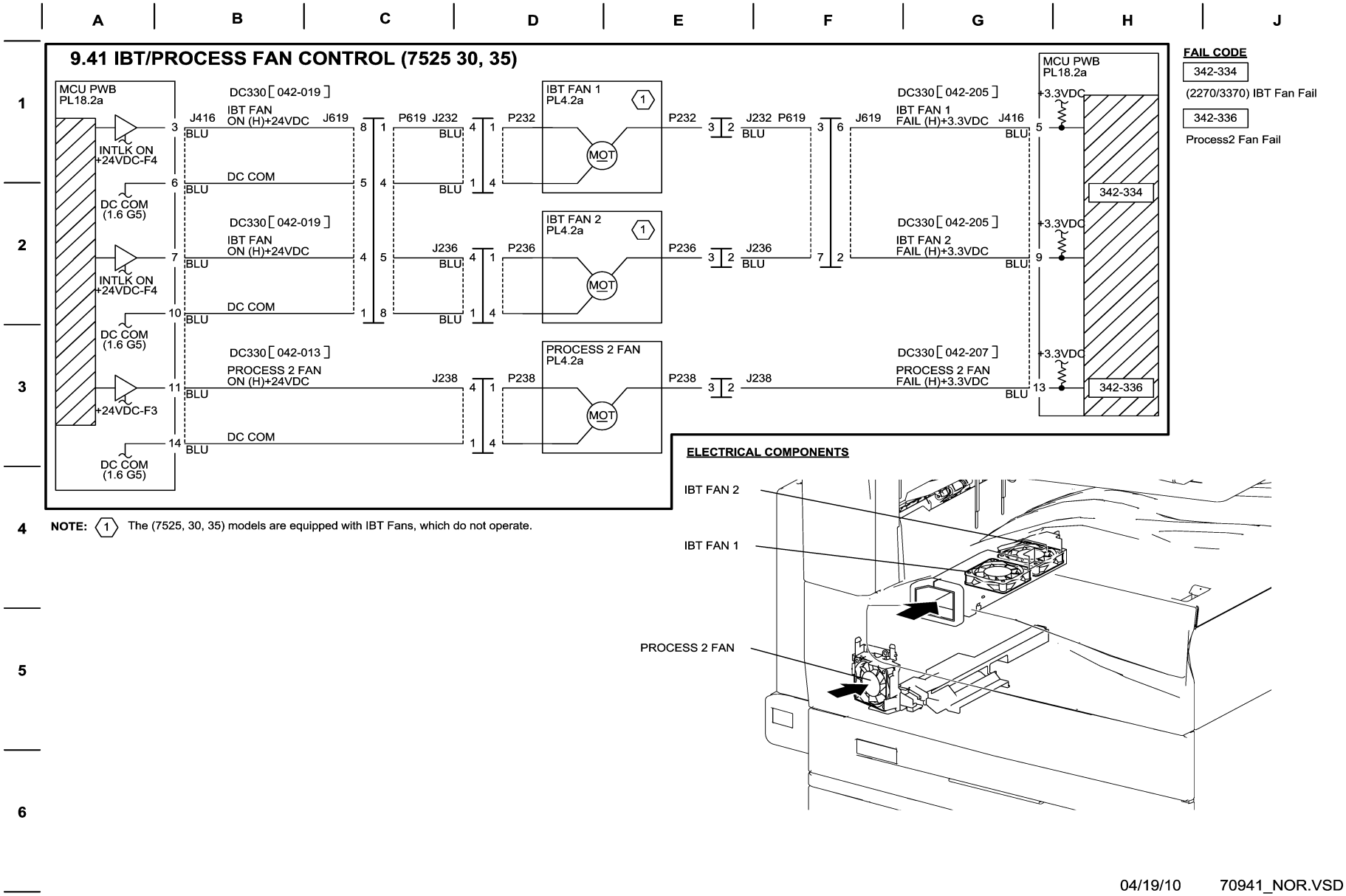

Figure 41 BSD 9.41 IBT/Process Fan Control (7525,7530,7535)

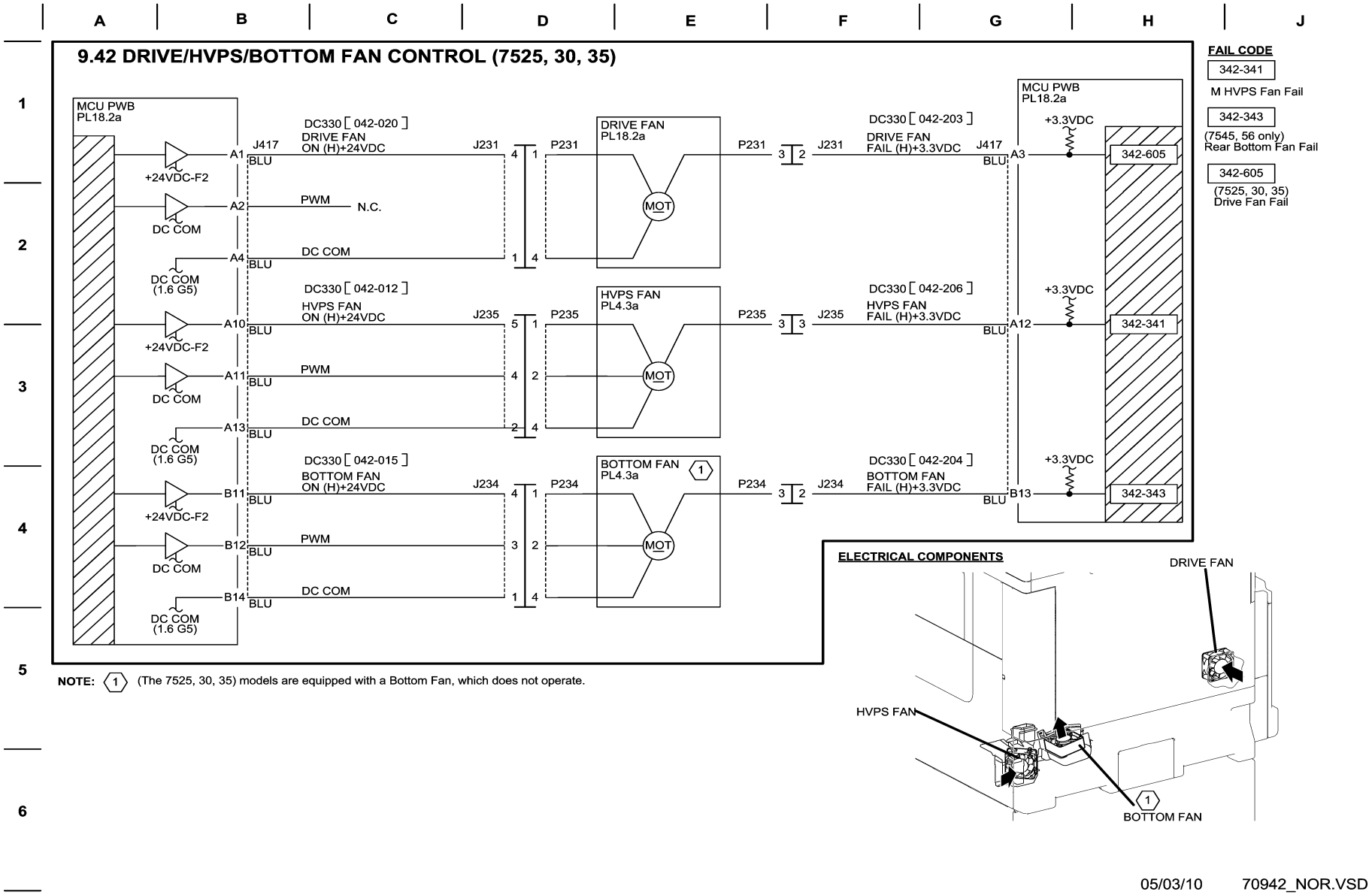

Figure 42 BSD 9.42 Drive/HVPS/Bottom Fan (7525,7530,7535)

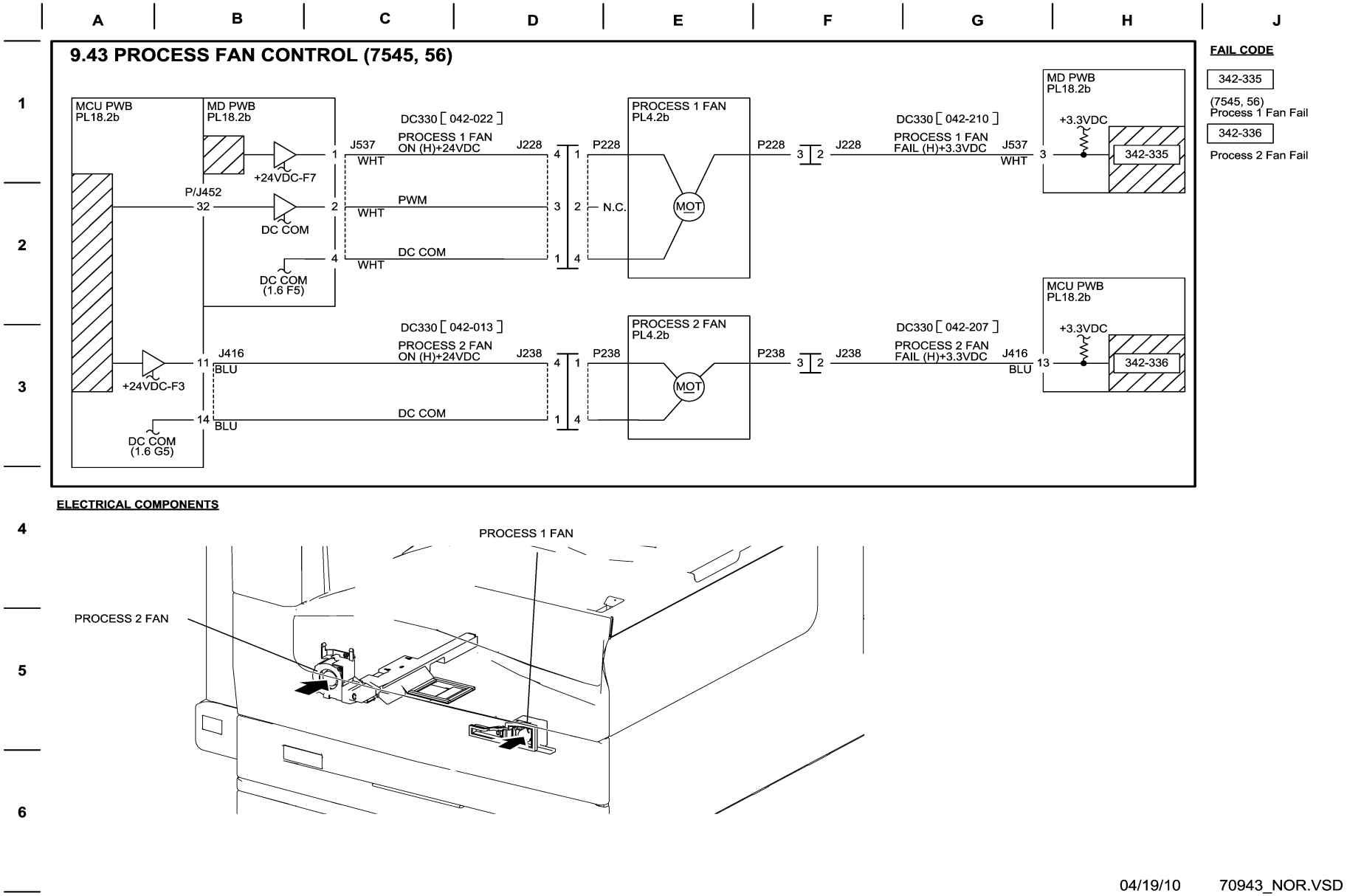

Figure 43 BSD 9.43 Process Fan Control (7545,7556)

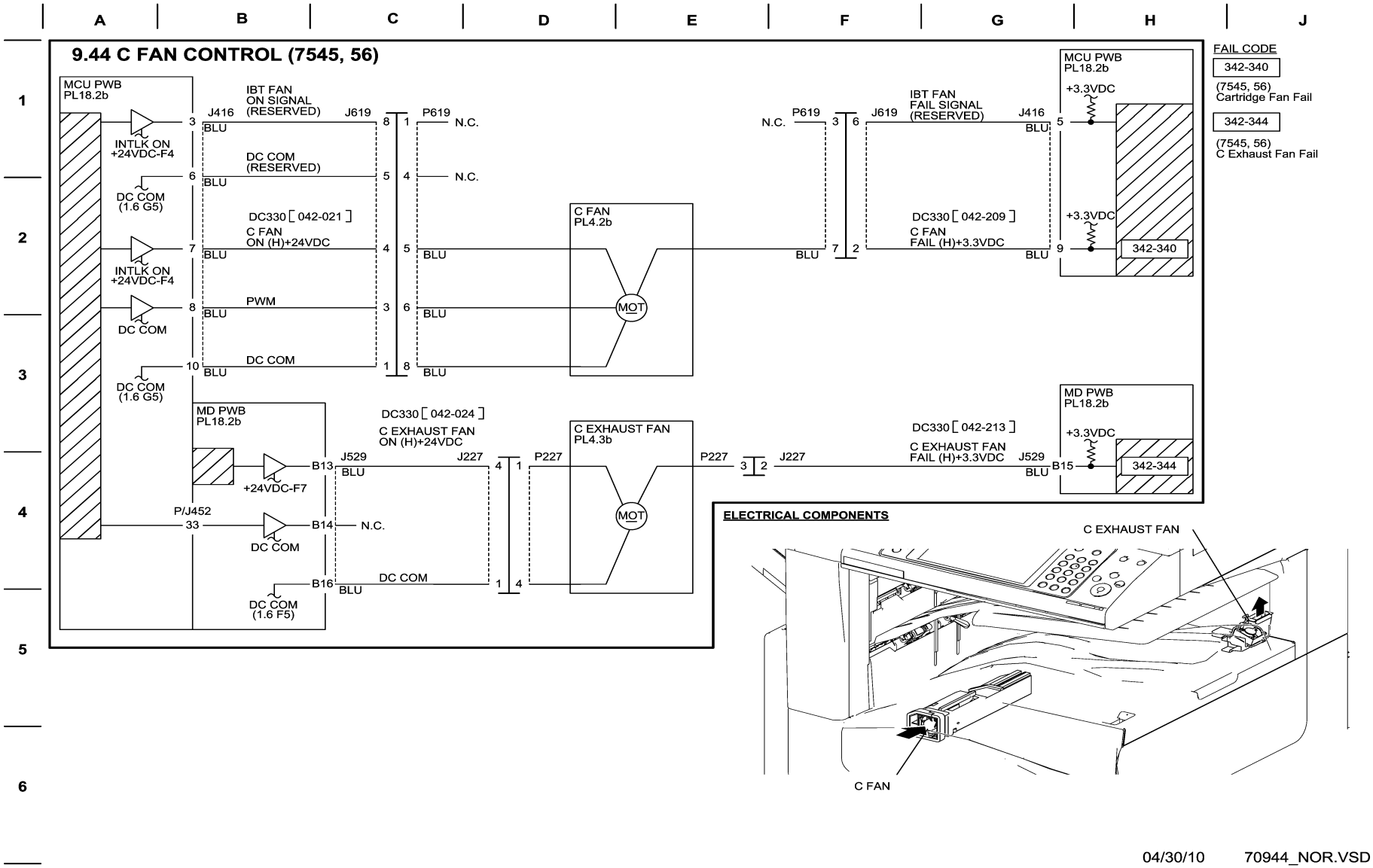

Figure 44 BSD 9.44 C Fan Control (7545,7556)

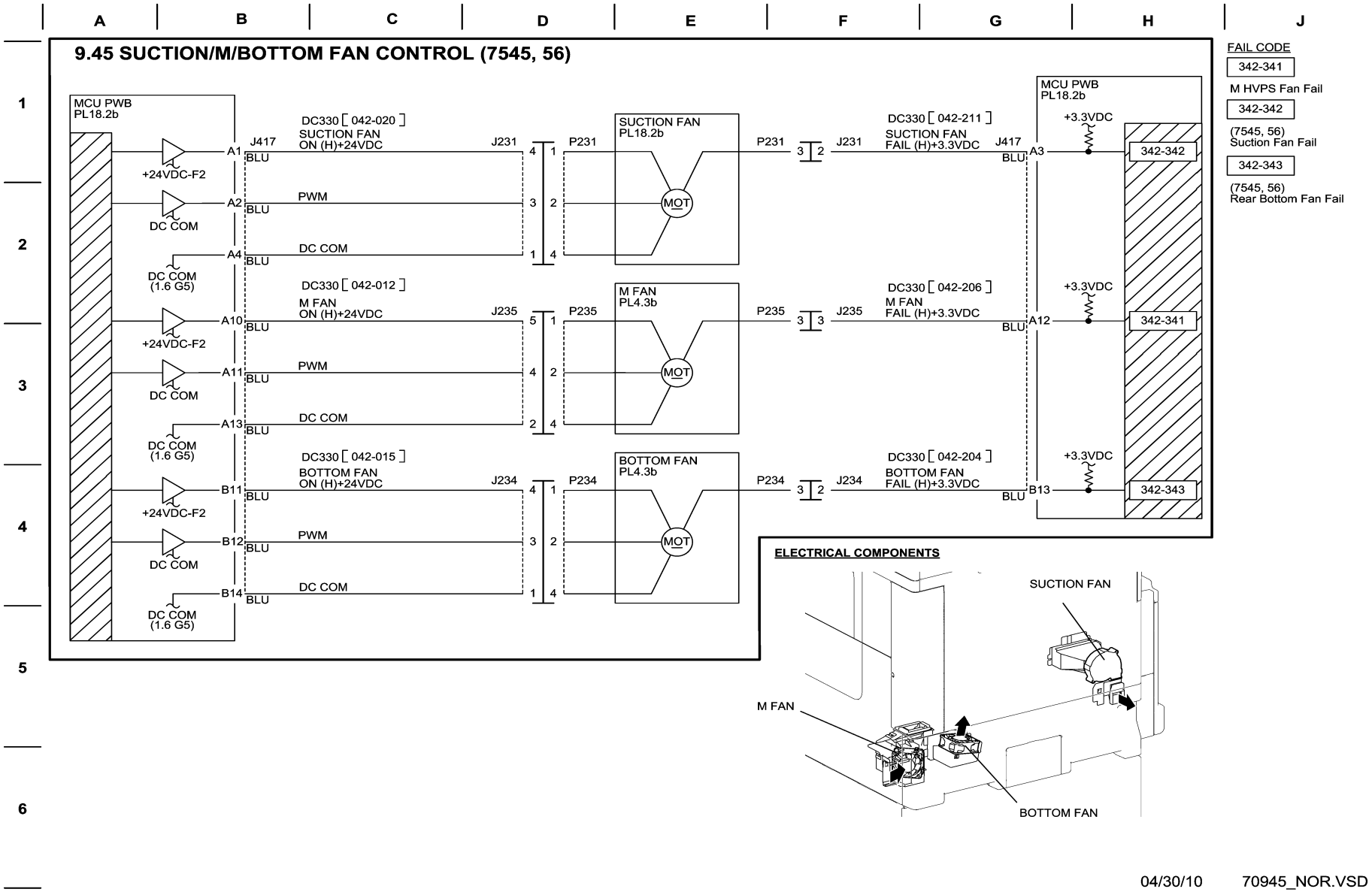

Figure 45 BSD 9.45 Suction/M/Bottom Fan Control (7545,7556)

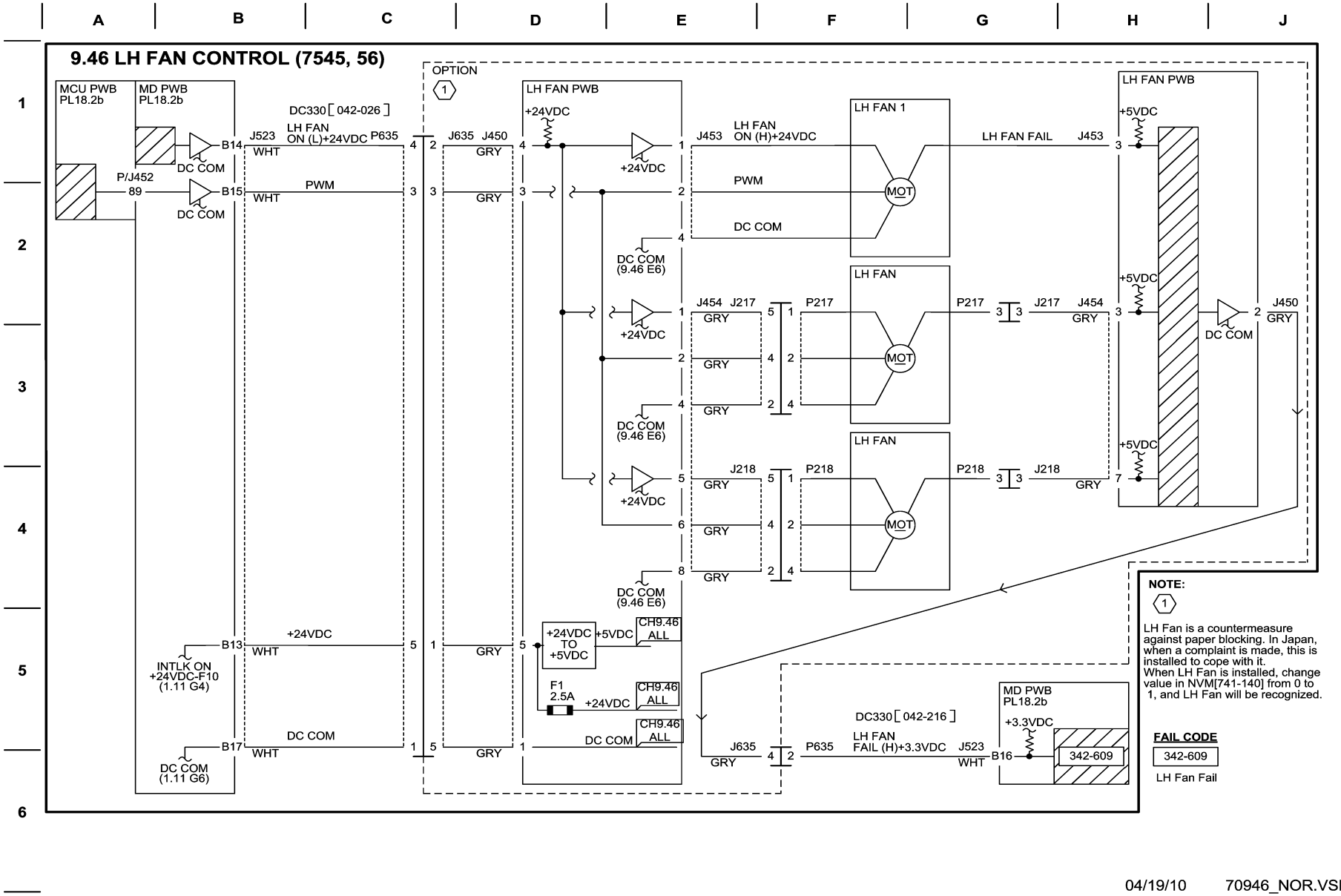

Figure 46 BSD 9.46 LH Fan Control

10.1 FUSER DRIVE CONTROL (1 OF 2)

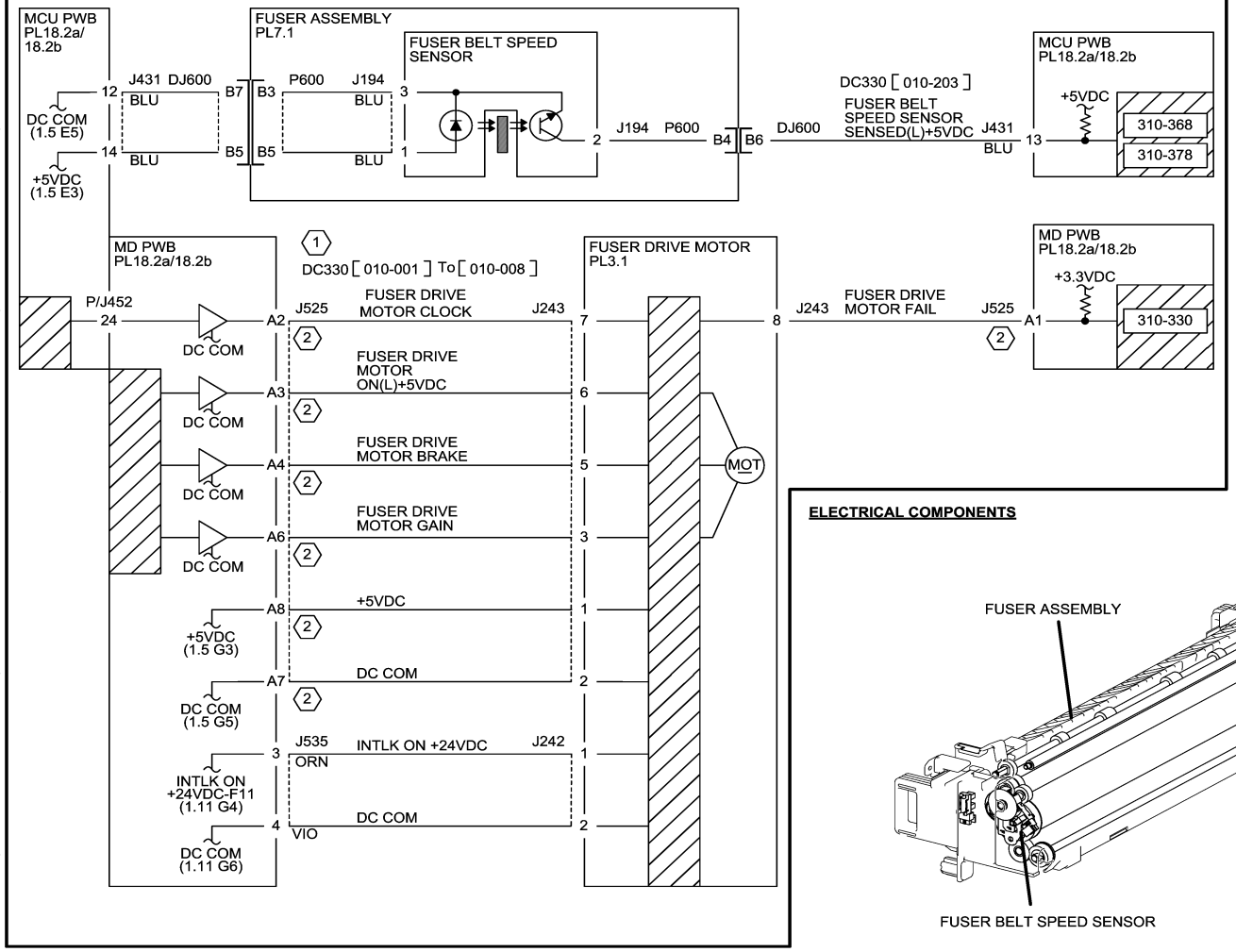

FAIL CODE

310-330	Fuser Motor Fail
310-368	Encoder Pulse Fail
310-378	Heat Belt Rotation Fail

NOTE:

(1) The operation speed varies depending on the diag code.

FUSER DRIVE MOTOR	Operation Speed	Targeted Model
DC330[010-001]	255mm/sec	7545, 56
DC330[010-002]	225mm/sec	7545, 56
DC330[010-003]	200mm/sec	7545, 56
DC330[010-004]	175mm/sec	7545, 56
DC330[010-005]	121mm/sec	7545, 56
DC330[010-006]	175mm/sec	7525, 30, 35/7545, 56
DC330[010-007]	121mm/sec	7525, 30, 35/7545, 56
DC330[010-008]	79mm/sec	7525, 30, 35/7545, 56

(2) Wire Color varies depending on the model.
(7525, 30, 35): BLU
(7545, 56): WHT

ELECTRICAL COMPONENTS

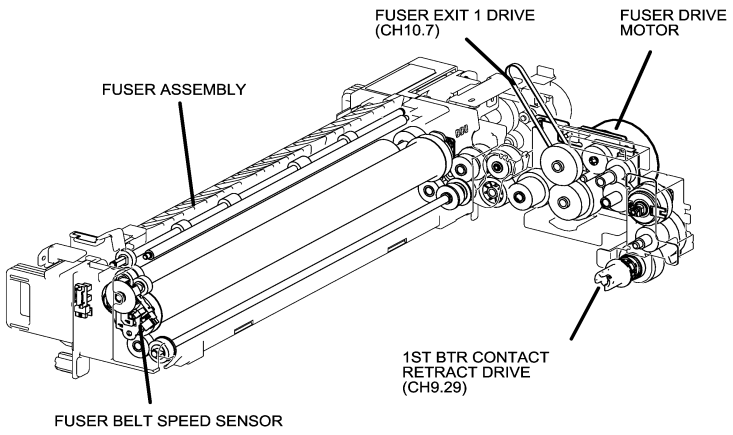

04/28/10 71001_NOR.VSD

Figure 1 BSD 10.1 Fuser Drive Control (1 of 2)

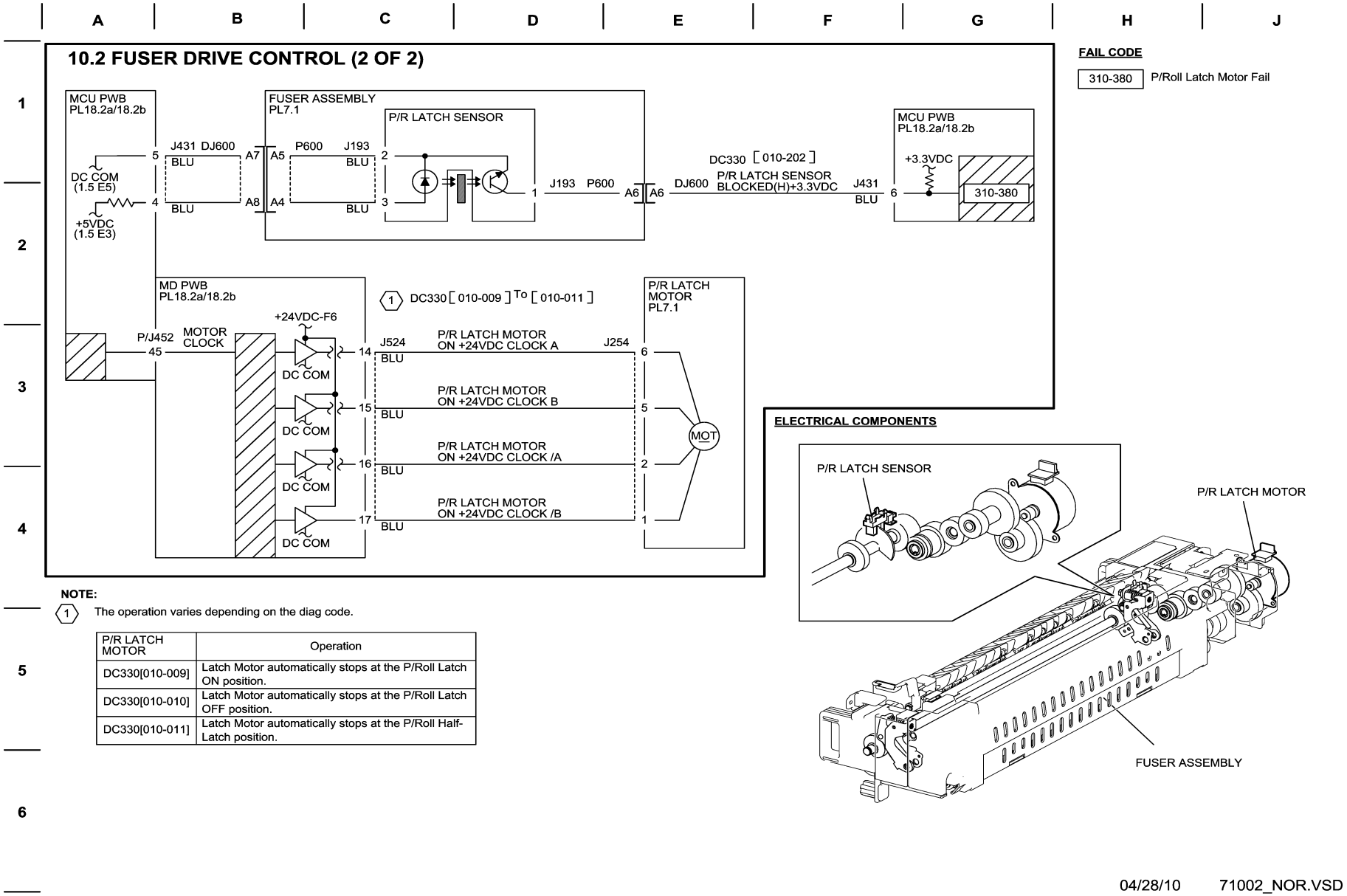

NOTE:

(1) The operation varies depending on the diag code.

P/R LATCH MOTOR	Operation
DC330[010-009]	Latch Motor automatically stops at the P/Roll Latch ON position.
DC330[010-010]	Latch Motor automatically stops at the P/Roll Latch OFF position.
DC330[010-011]	Latch Motor automatically stops at the P/Roll Half-Latch position.

Figure 2 BSD 10.2 Fuser Drive Control (2 of 2)

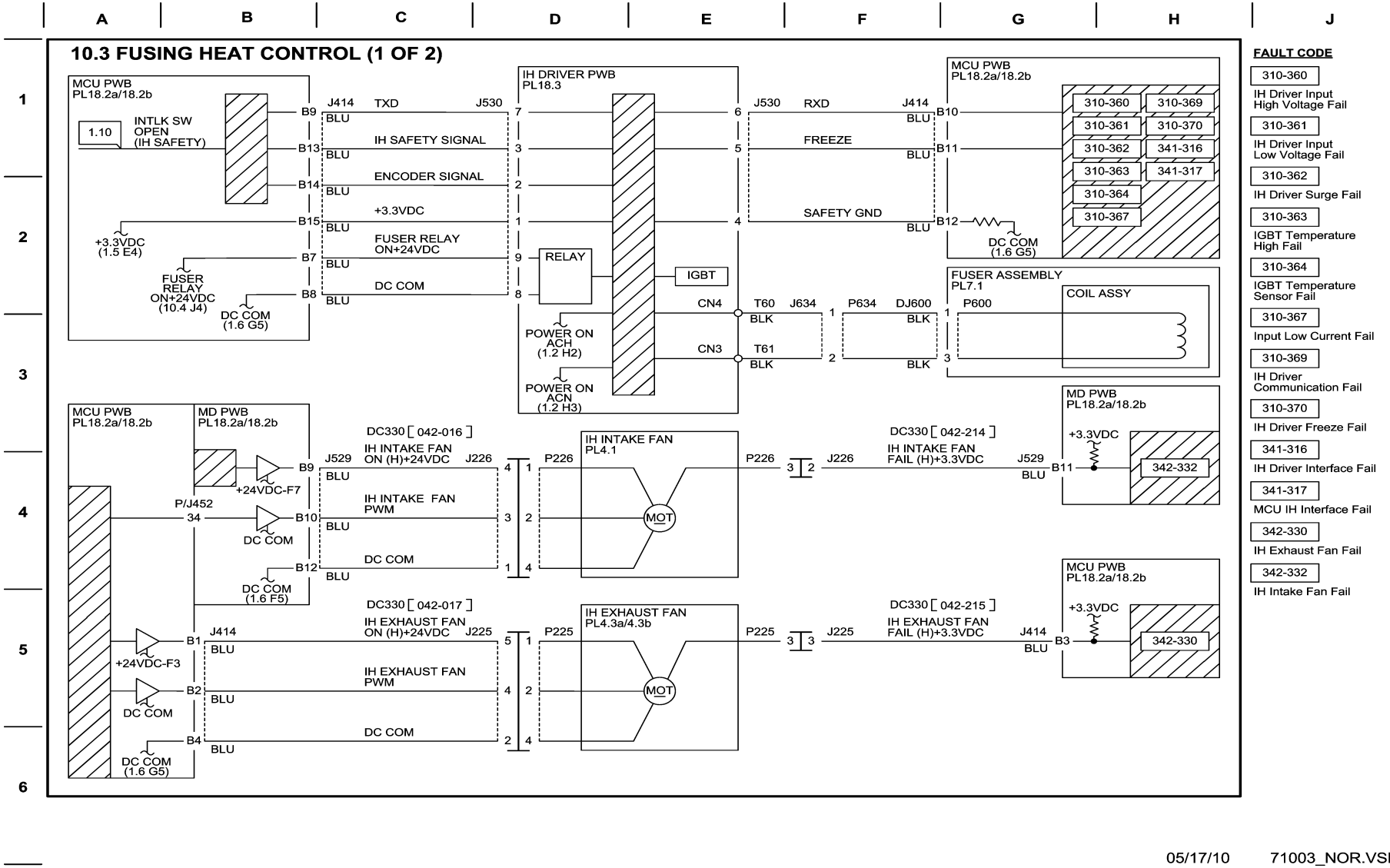

Figure 3 BSD 10.3 Fusing Heat Control (1 of 2)

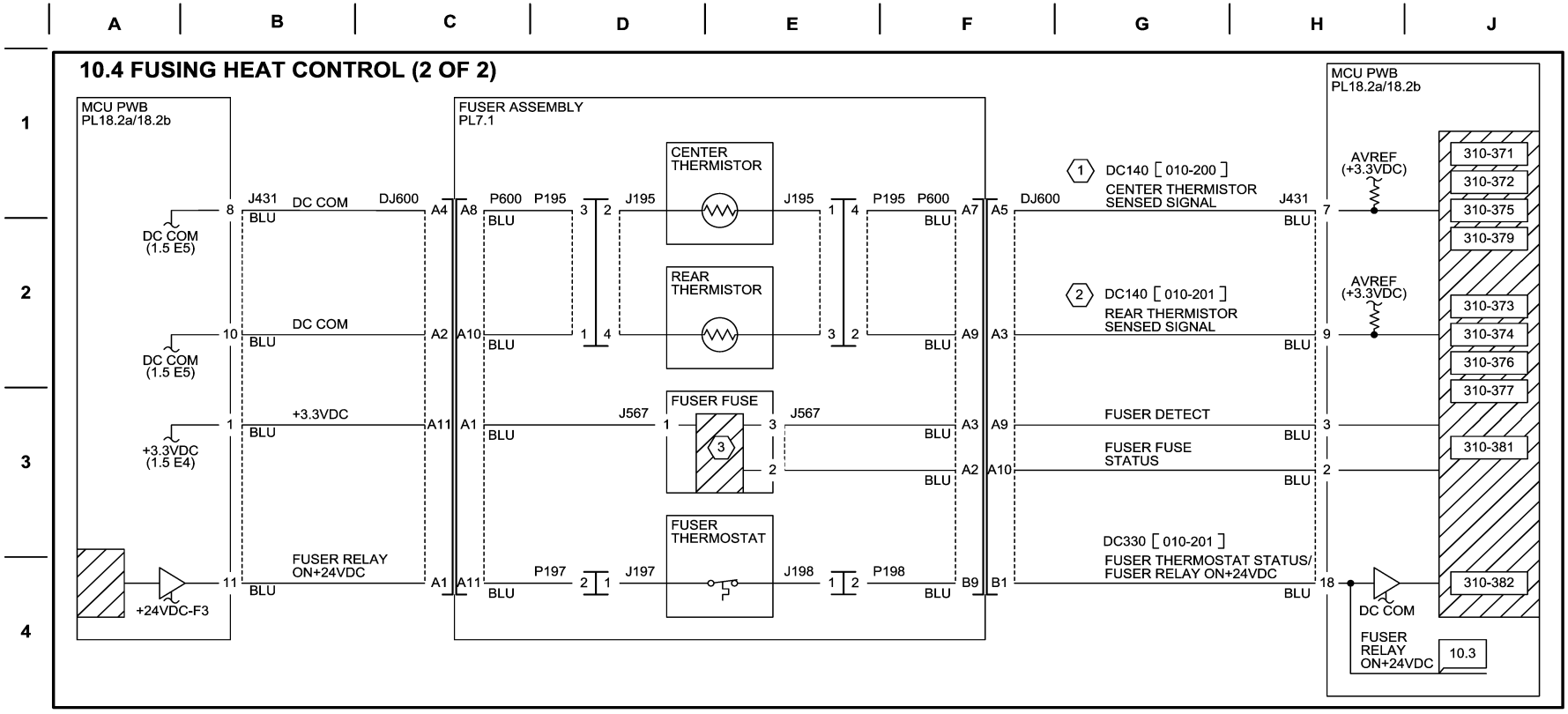

NOTE:

1. DC140[010-200] displays AD value shown by Center Thermistor. AD Value is normally in the output range below: Normal range: 1018 (low temp) to 120 (high temp)
2. DC140[010-201] displays AD value shown by Rear Thermistor. AD Value is normally in the output range below: Normal range: 1018 (low temp) to 120 (high temp)
3. As to (7525, 30, 35) Fuser Fuse is used in M/N

FAIL CODE

310-371 Heat Belt STS Center Disconnection Fail	310-374 Heat Belt STS Rear Over Temperature Fail	310-377 Fuser On Time Fail	310-382 Fuser Thermostat Fail
310-372 Heat Belt STS Center Over Temperature Fail	310-375 Heat Belt STS Center Warm Up Time Fail	310-379 Fuser Hot Not Ready Return Time Fail	
310-373 Heat Belt STS Rear Disconnection Fail	310-376 Heat Belt STS Rear Warm Up Time Fail	310-381 Fuser Assy Illegal Fail	

04/28/10 71004_NOR.VSD

Figure 4 BSD 10.4 Fusing Heat Control (2 of 2)

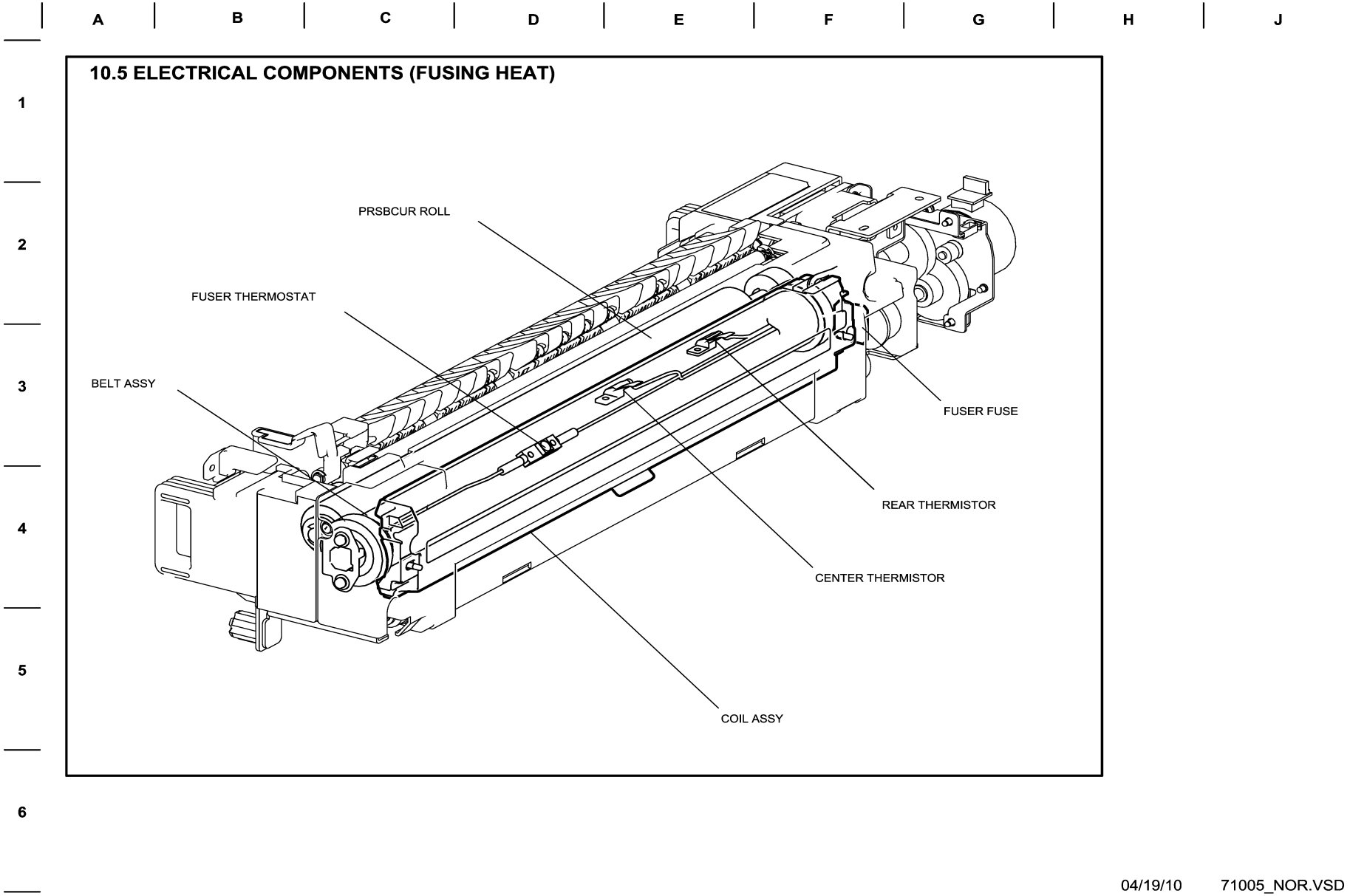

Figure 5 BSD 10.5 Electrical Components (Fusing Heat)

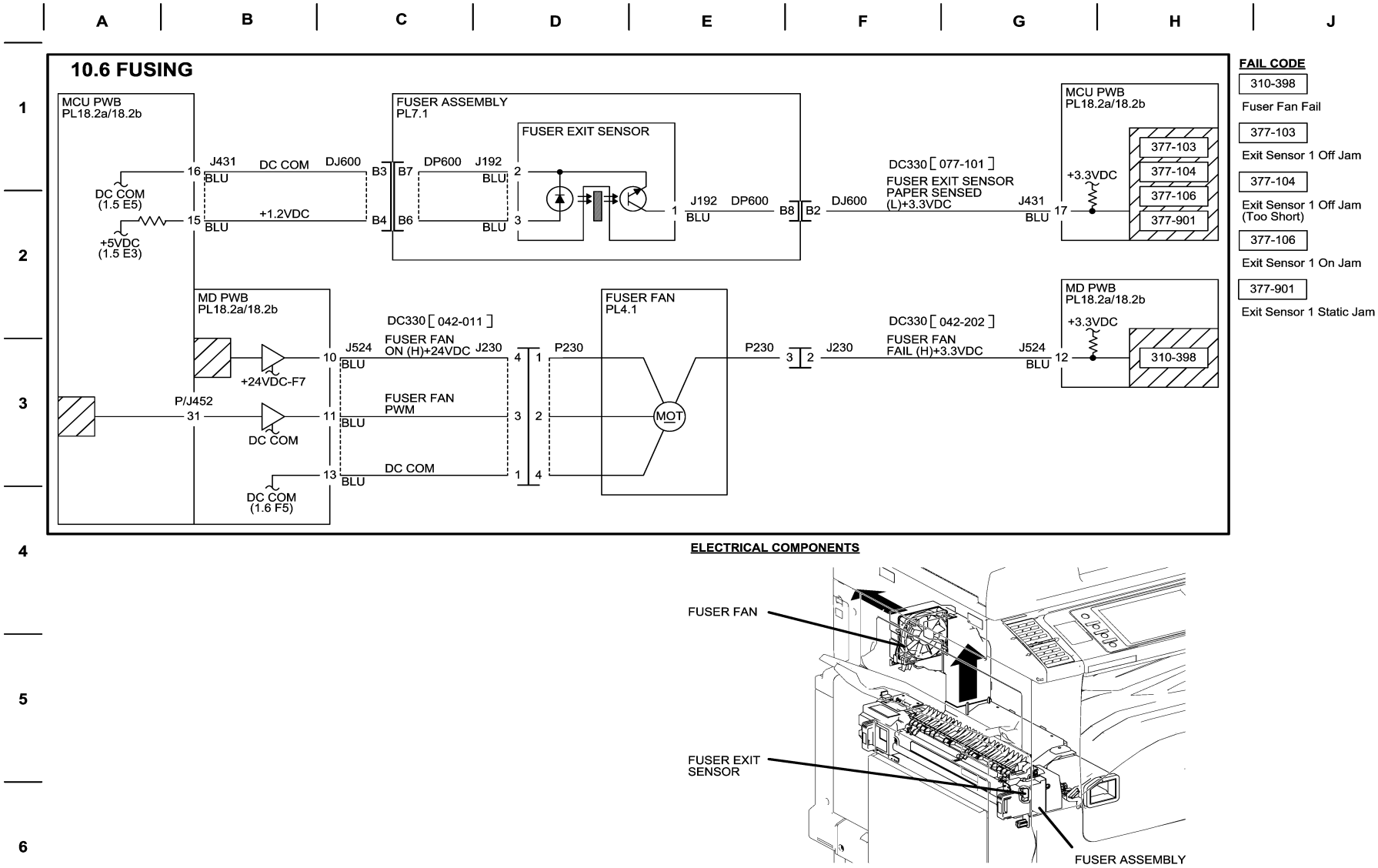

Figure 6 BSD 10.6 Fusing

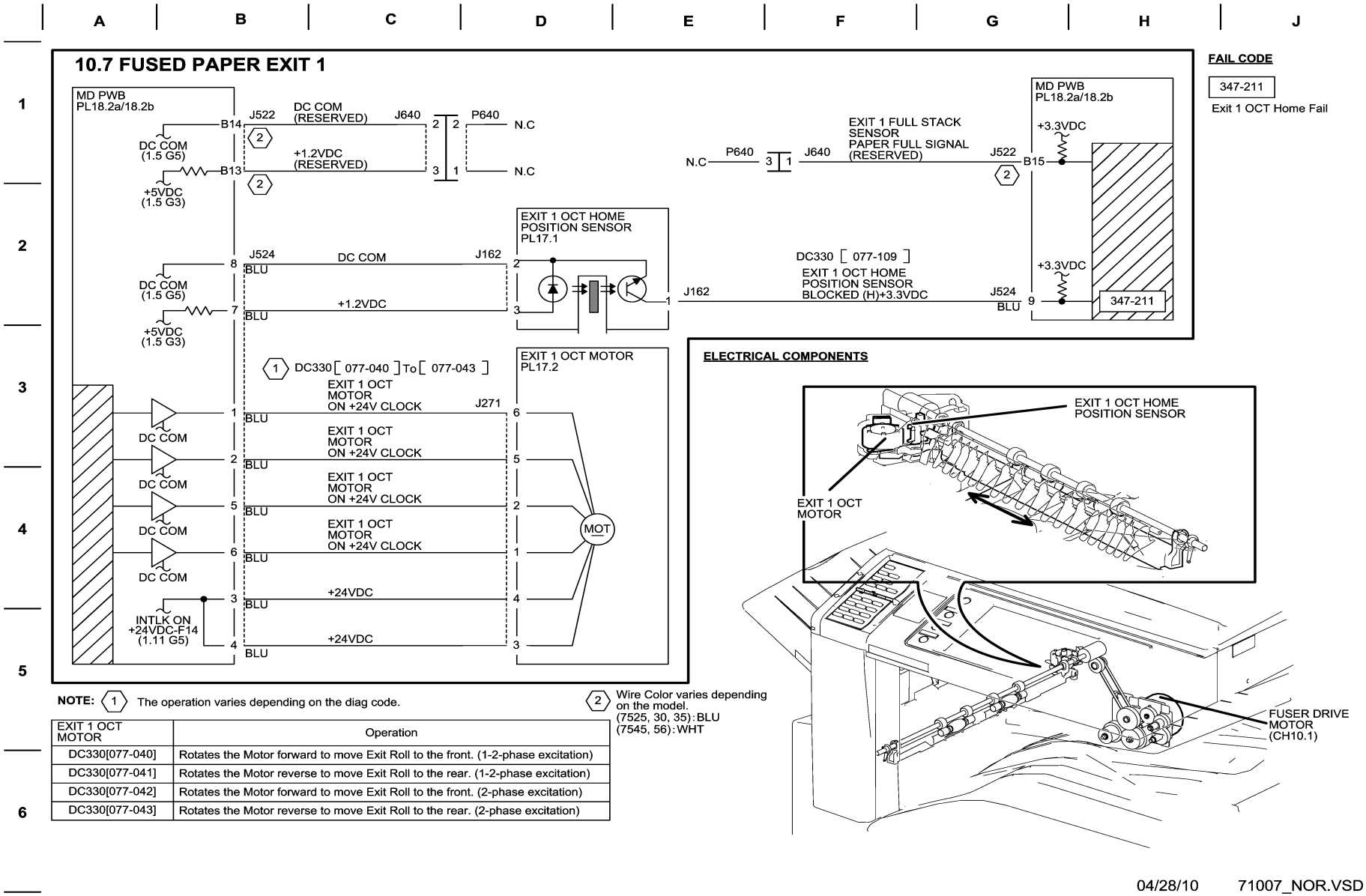

EXIT 1 OCT MOTOR	Operation
DC330[077-040]	Rotates the Motor forward to move Exit Roll to the front. (1-2-phase excitation)
DC330[077-041]	Rotates the Motor reverse to move Exit Roll to the rear. (1-2-phase excitation)
DC330[077-042]	Rotates the Motor forward to move Exit Roll to the front. (2-phase excitation)
DC330[077-043]	Rotates the Motor reverse to move Exit Roll to the rear. (2-phase excitation)

Figure 7 BSD 10.7 Fused Paper Exit 1

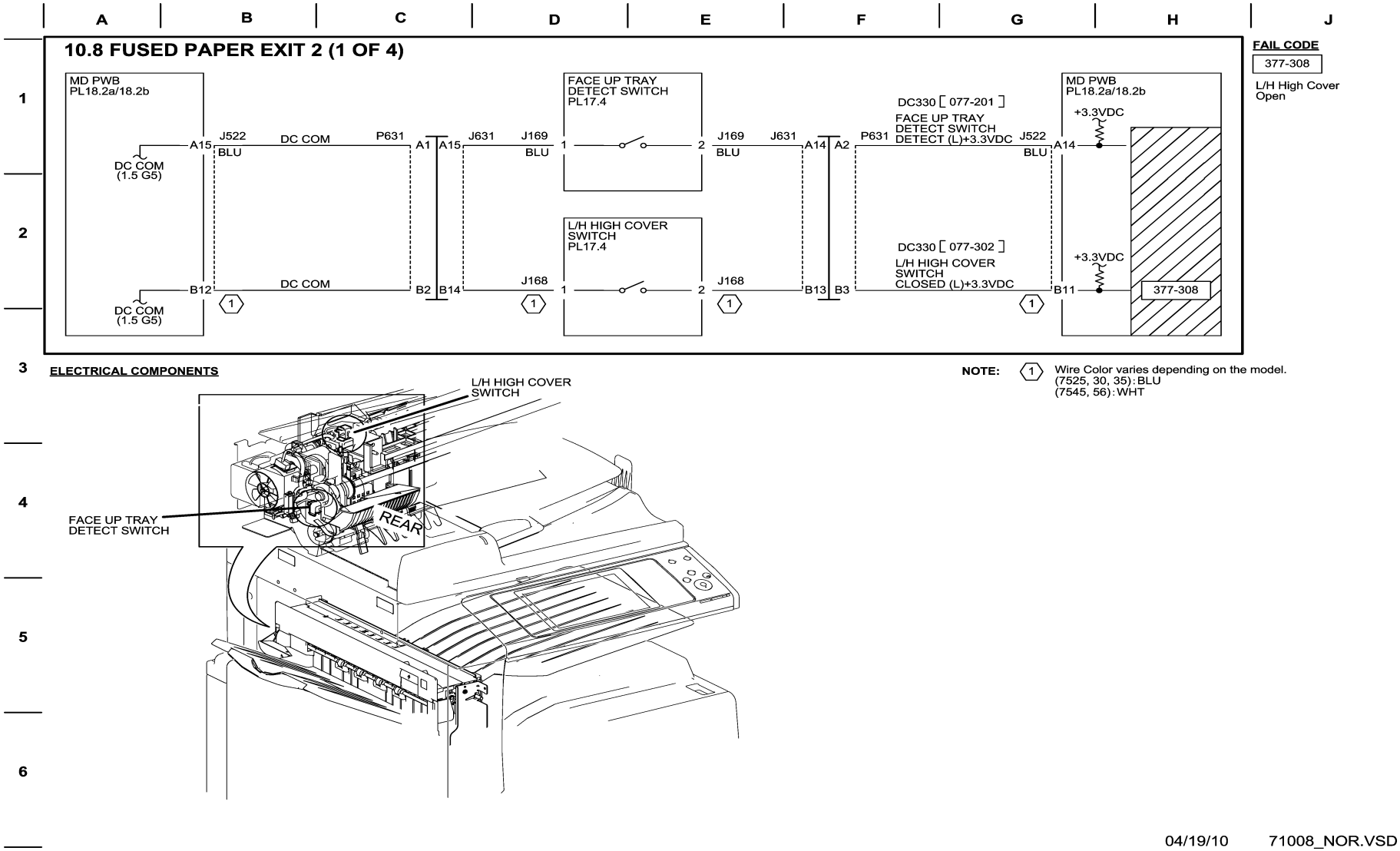

Figure 8 BSD 10.8 Fused Paper Exit 2 (1 of 4)

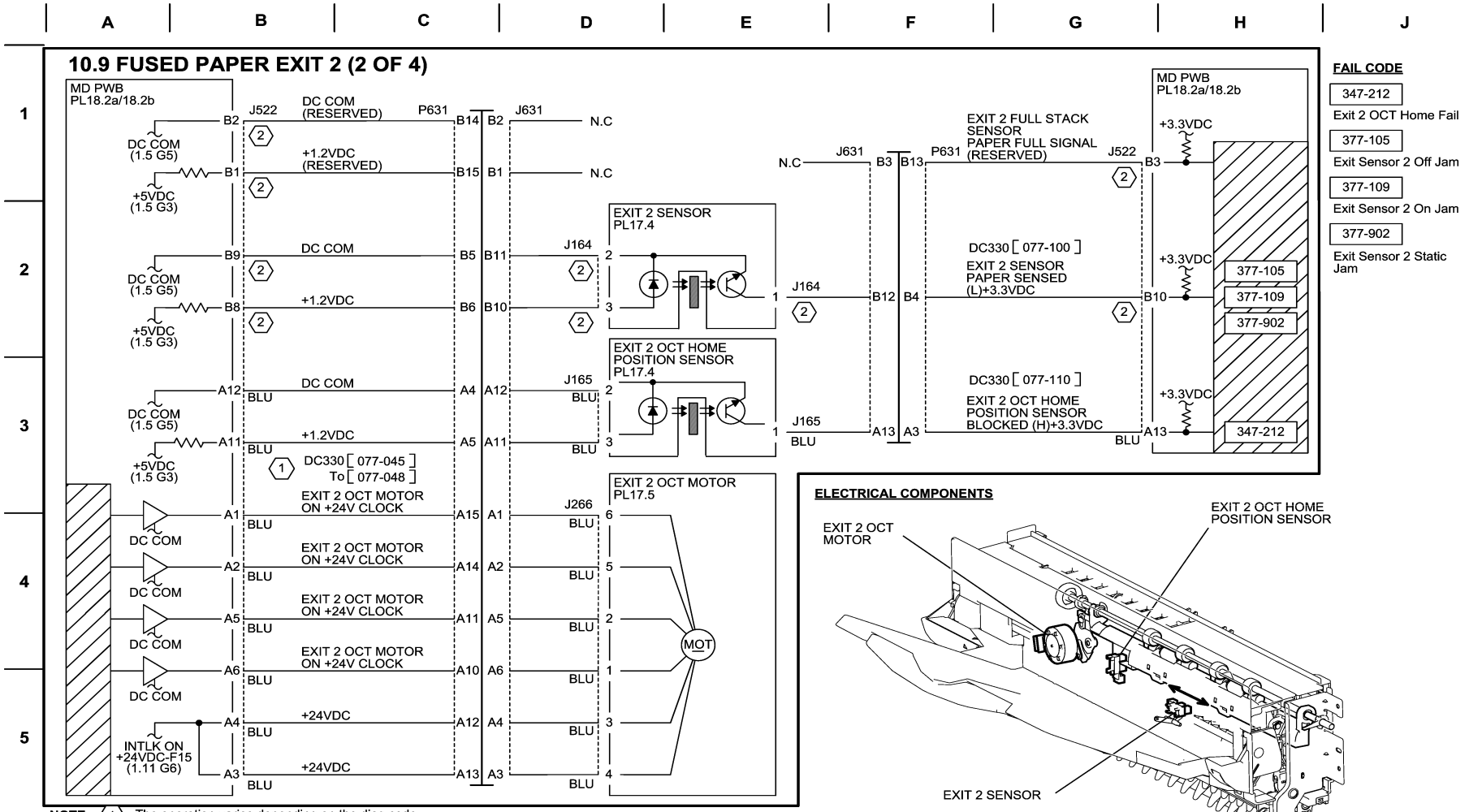

NOTE: 1 The operation varies depending on the diag code.

EXIT 2 OCT MOTOR	Operation
DC330[077-045]	Rotates the Motor forward to move Exit Roll to the front. (1-2-phase excitation)
DC330[077-046]	Rotates the Motor reverse to move Exit Roll to the rear. (1-2-phase excitation)

EXIT 2 OCT MOTOR	Operation
DC330[077-047]	Rotates the Motor forward to move Exit Roll to the front. (2-phase excitation)
DC330[077-048]	Rotates the Motor forward to move Exit Roll to the front. (2-phase excitation)

2 Wire Color varies depending on the model.
(7525, 30, 35): BLU
(7545, 56): WHT

04/20/10 71009_NOR.VSD

Figure 9 BSD 10.9 Fused Paper Exit 2 (2 of 4)

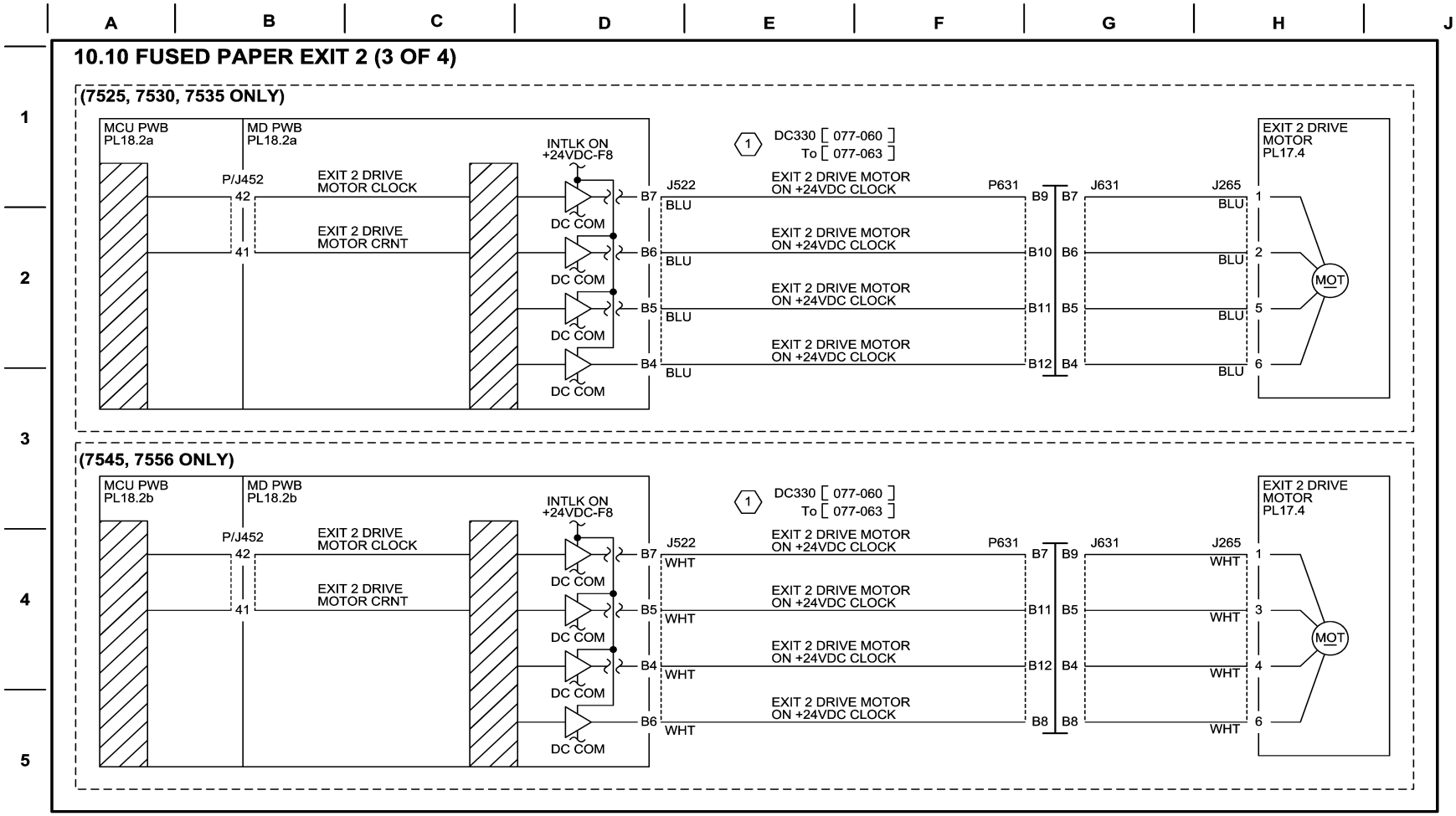

NOTE: (1) The operation varies depending on the diag code.

EXIT 2 DRIVE MOTOR	Operation
DC330[077-060]	Rotates the Motor forward. (in the Output direction. 1-2-phase excitation)
DC330[077-061]	Rotates the Motor reverse. (in the Pull-in direction. 1-2-phase excitation)
DC330[077-062]	Rotates the Motor forward. (in the Output direction. 2-phase excitation)
DC330[077-063]	Rotates the Motor reverse. (in the Pull-in direction. 2-phase excitation)

04/20/10 71010_NOR.VSD

Figure 10 BSD 10.10 Fused Paper Exit 2 (3 of 4)

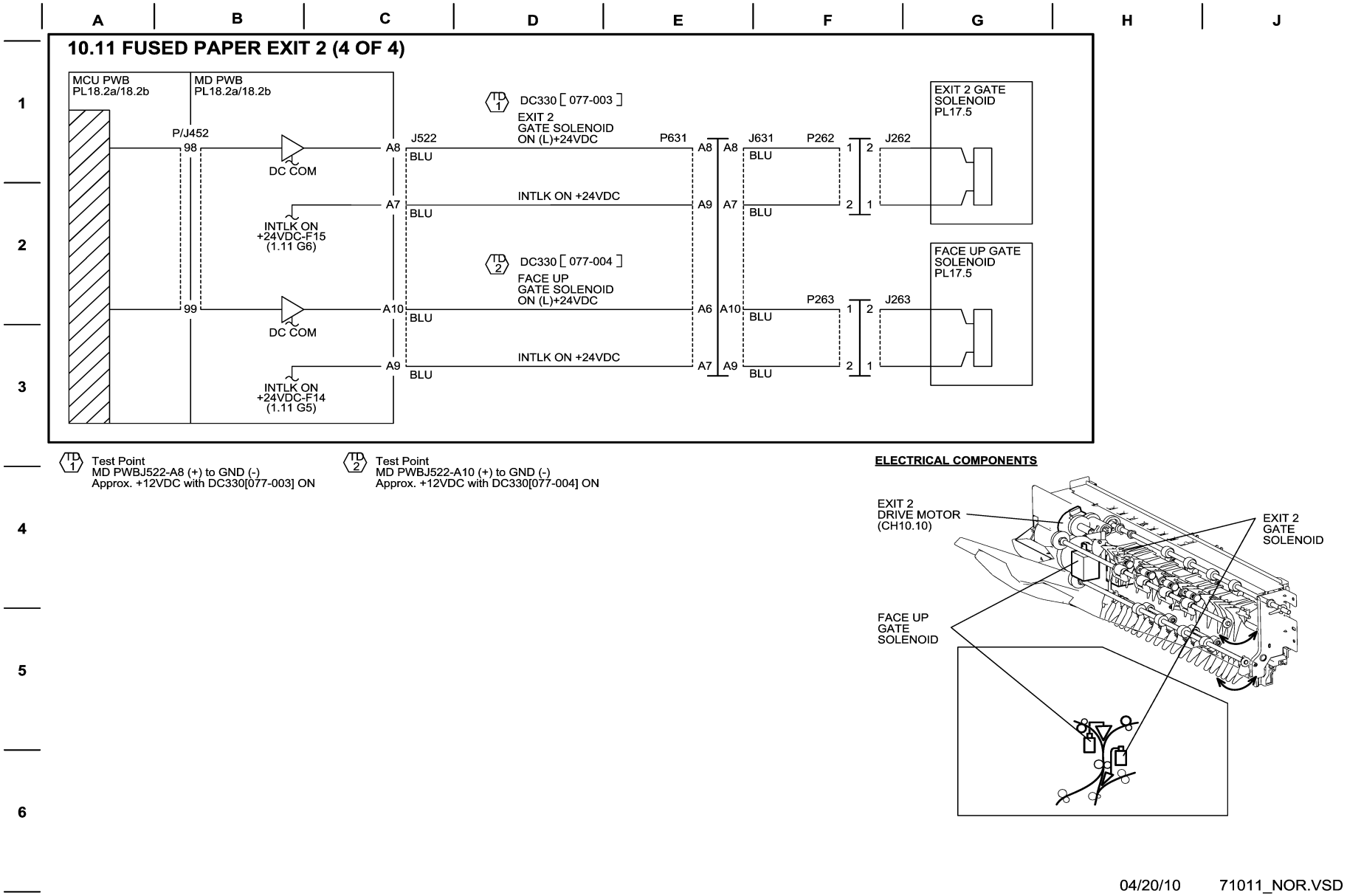

Figure 11 BSD 10.11 Fused Paper Exit 2 (4 of 4)

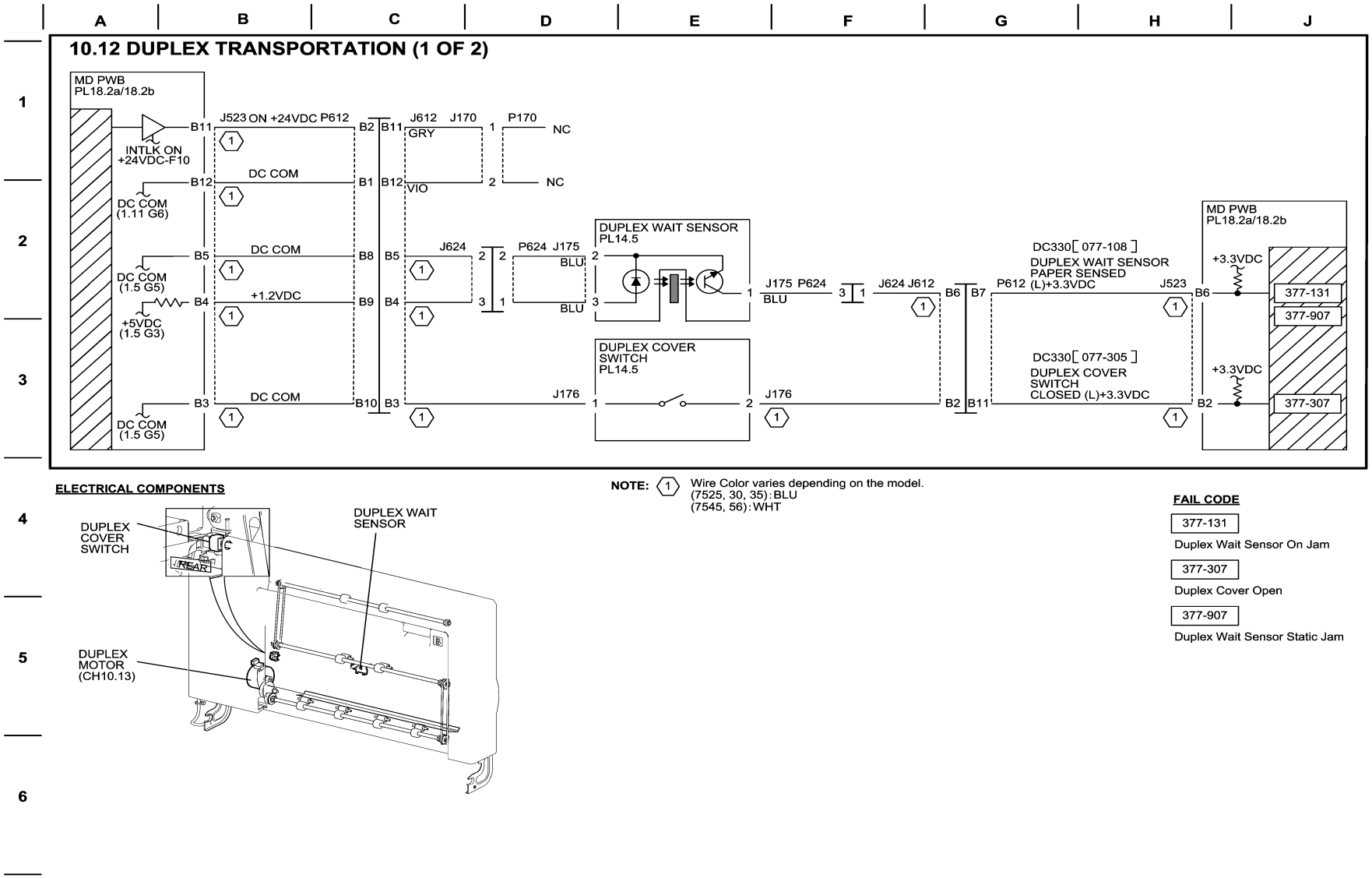

Figure 12 BSD 10.12 Duplex Transportation (1 of 2)

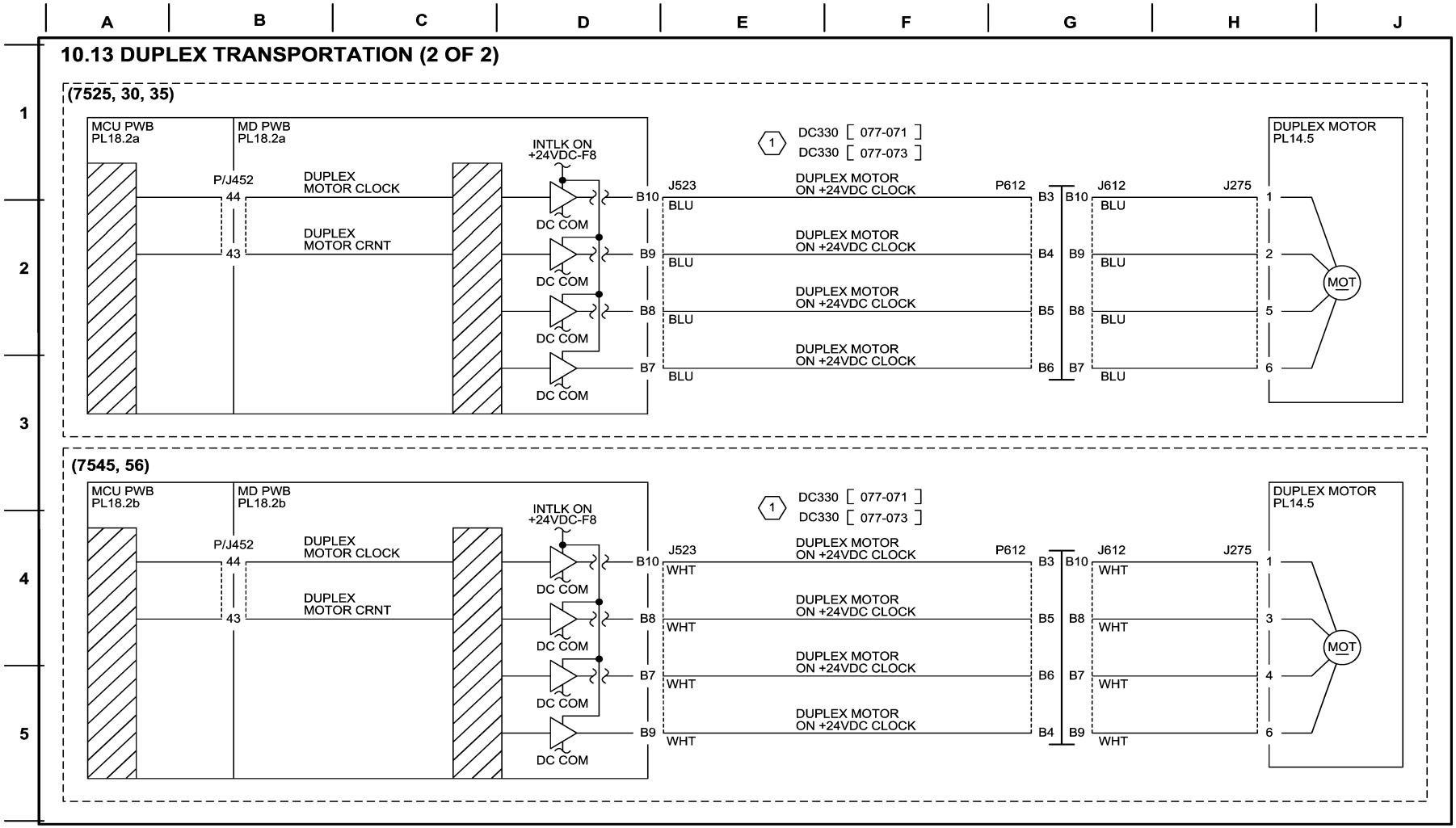

NOTE: (1) The operation varies depending on the diag code.

DUPLEX MOTOR	Operation
DC330[077-071]	Rotates the Motor reverse. (in the Pull-in Duplex direction. 1-2-phase excitation)
DC330[077-073]	Rotates the Motor reverse. (in the Pull-in Duplex direction. 2-phase excitation)

04/20/10 71013_NOR.VSD

Figure 13 BSD 10.13 Duplex Transportation (2 of 2)

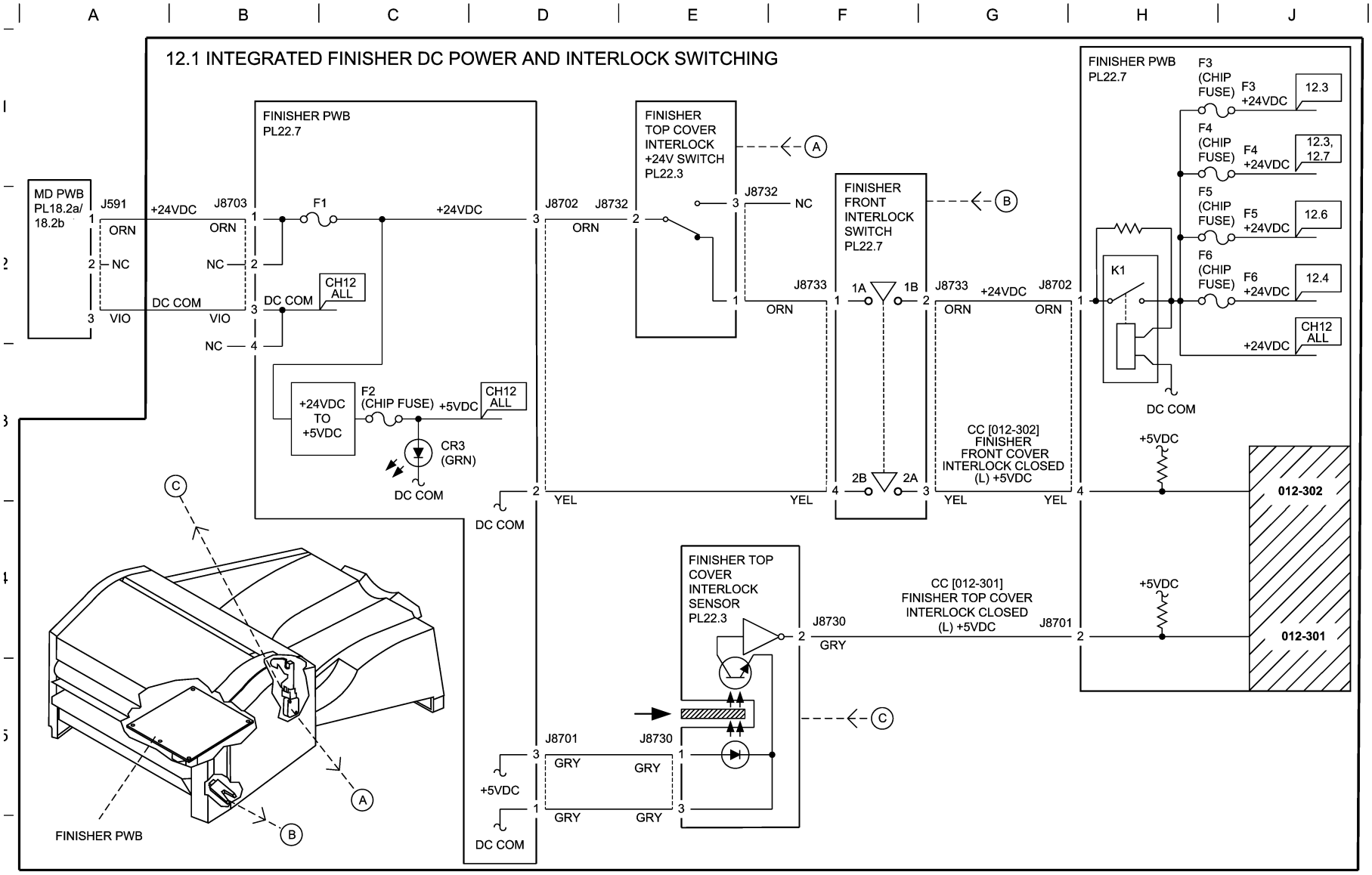

FAULT CODES

012-301	TOP COVER INTERLOCK OPEN
012-302	FRONT COVER INTERLOCK OPEN

11/29/11 71201_NOR.VSD

Figure 1 BSD 12.1 Integrated Finisher DC Power and Interlock Switching

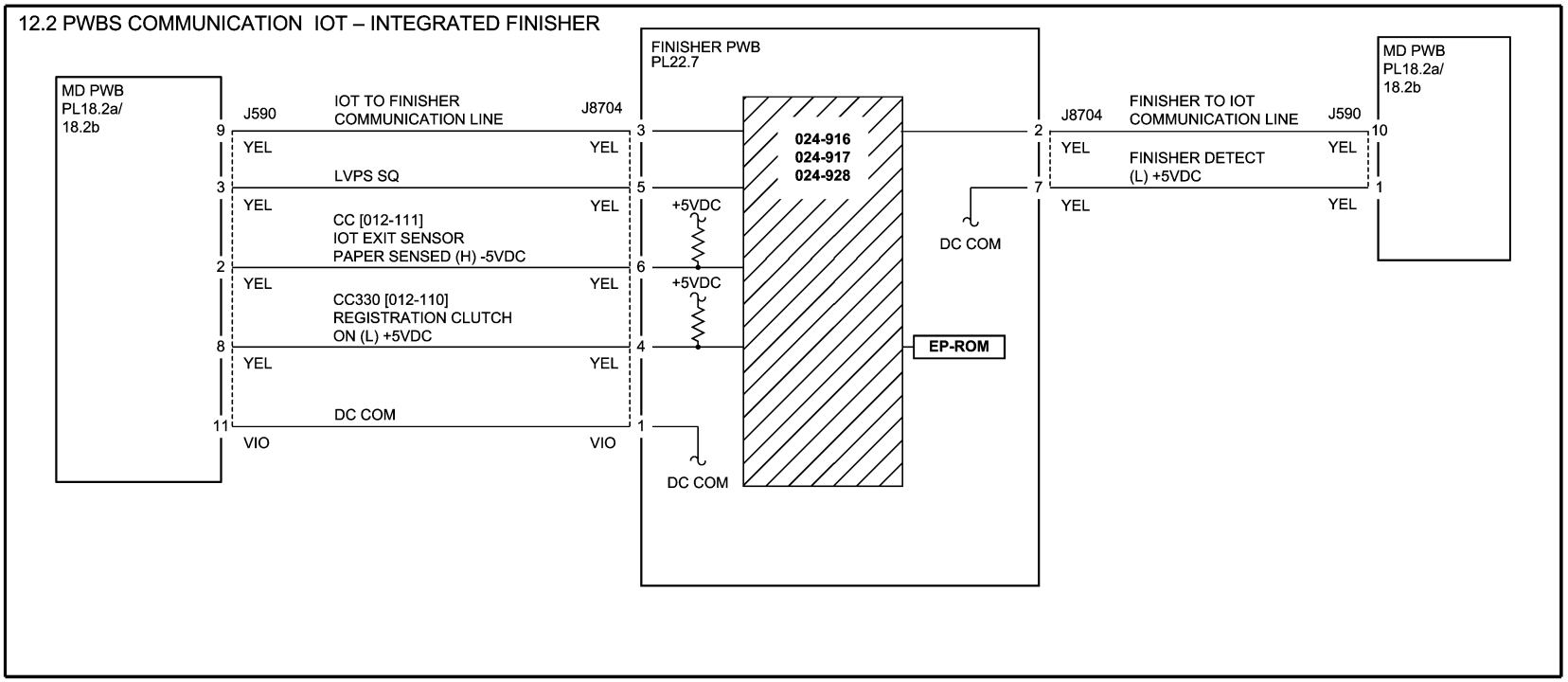

FAULT CODES

024-916 MIX STACK FULL

024-917 STACKER TRAY STAPLE SET OVER COUNT

024-928 SCRATCH SHEET COMPILE

11/17/11 71202-NOR.vsd

Figure 2 BSD 12.2 PWBS Communication IOT - Integrated Finisher

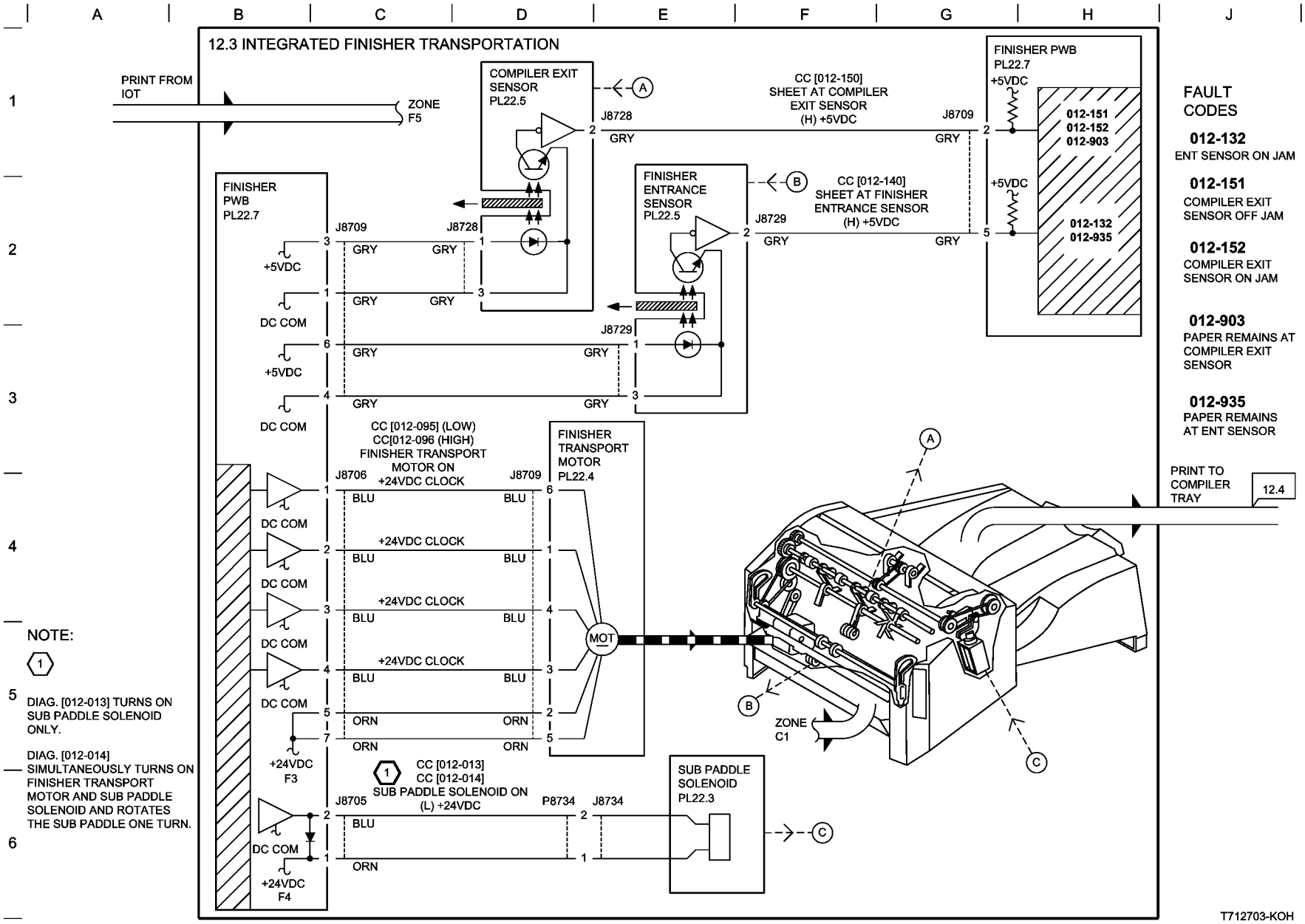
12.3 INTEGRATED FINISHER TRANSPORTATION
PRINT FROM IOT
ZONE F5
COMPILER EXIT SENSOR PL22.5
J8728
GRY
CC [012-150] SHEET AT COMPILER EXIT SENSOR (H) +5VDC
J8709
FINISHER PWB PL22.7
+5VDC
012-151
012-152
012-903
FINISHER ENTRANCE SENSOR PL22.5
J8729
CC [012-140] SHEET AT FINISHER ENTRANCE SENSOR (H) +5VDC
012-132
012-935
FINISHER PWB PL22.7
+5VDC
DC COM
CC [012-095] (LOW)
CC[012-096 (HIGH)
FINISHER TRANSPORT MOTOR ON
+24VDC CLOCK
J8706
BLU
FINISHER TRANSPORT MOTOR PL22.4
MOT
ORN
+24VDC F3
+24VDC F4
CC [012-013]
CC [012-014]
SUB PADDLE SOLENOID ON
(L) +24VDC
J8705
P8734
J8734
SUB PADDLE SOLENOID PL22.3
ZONE C1
PRINT TO COMPILER TRAY
12.4
FAULT CODES
012-132
ENT SENSOR ON JAM
012-151
COMPILER EXIT SENSOR OFF JAM
012-152
COMPILER EXIT SENSOR ON JAM
012-903
PAPER REMAINS AT COMPILER EXIT SENSOR
012-935
PAPER REMAINS AT ENT SENSOR
NOTE:
DIAG. [012-013] TURNS ON SUB PADDLE SOLENOID ONLY.
DIAG. [012-014] SIMULTANEOUSLY TURNS ON FINISHER TRANSPORT MOTOR AND SUB PADDLE SOLENOID AND ROTATES THE SUB PADDLE ONE TURN.
T712703-KOH

Figure 3 BSD 12.3 Integrated Finisher Transportation

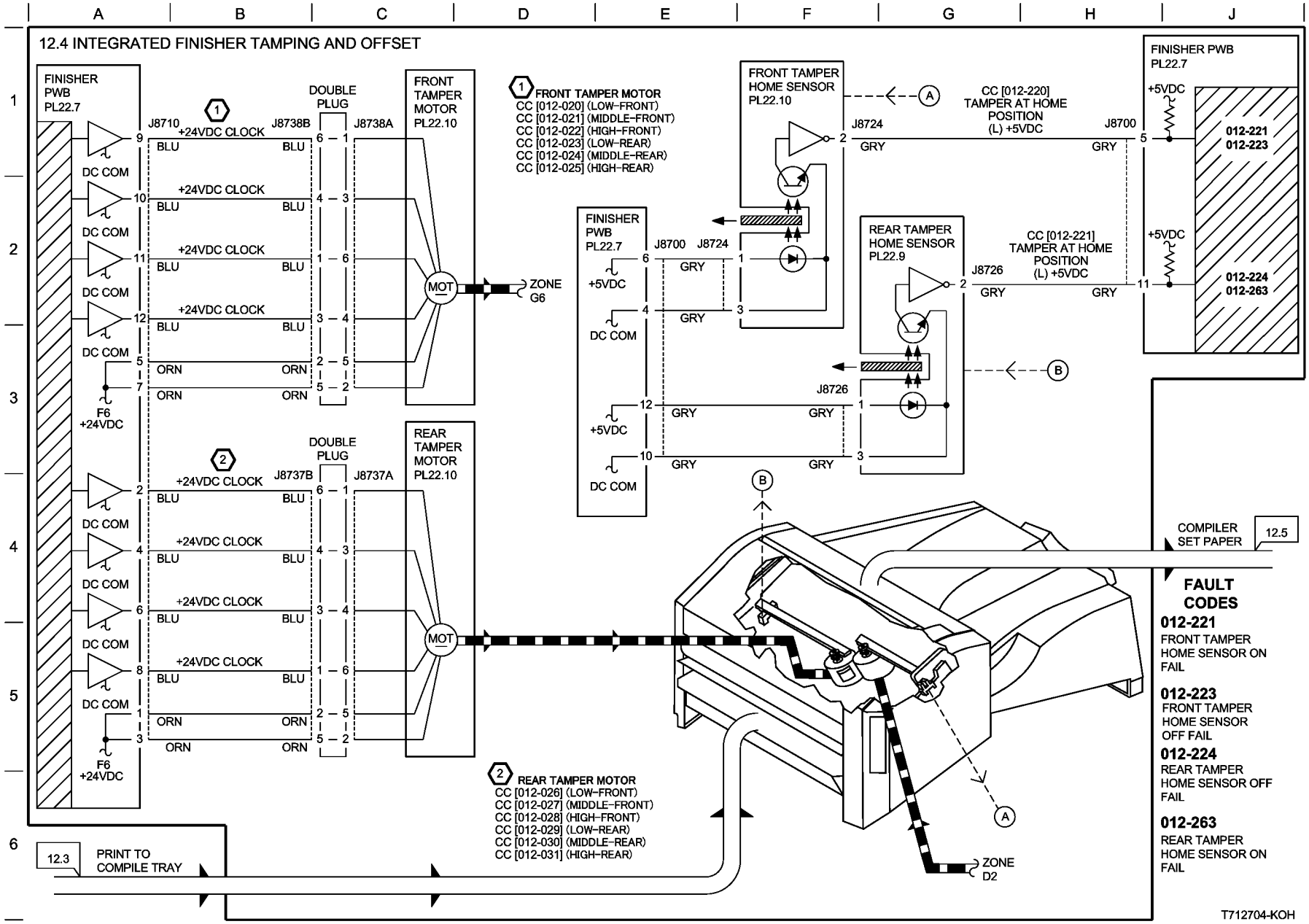
12.4 INTEGRATED FINISHER TAMPING AND OFFSET
FINISHER PWB PL22.7
DC COM
F6 +24VDC
J8710
+24VDC CLOCK
BLU
ORN
DOUBLE PLUG
J8738B
J8738A
FRONT TAMPER MOTOR PL22.10
MOT
ZONE G6
FRONT TAMPER MOTOR
CC [012-020] (LOW-FRONT)
CC [012-021] (MIDDLE-FRONT)
CC [012-022] (HIGH-FRONT)
CC [012-023] (LOW-REAR)
CC [012-024] (MIDDLE-REAR)
CC [012-025] (HIGH-REAR)
J8737B
J8737A
REAR TAMPER MOTOR PL22.10
REAR TAMPER MOTOR
CC [012-026] (LOW-FRONT)
CC [012-027] (MIDDLE-FRONT)
CC [012-028] (HIGH-FRONT)
CC [012-029] (LOW-REAR)
CC [012-030] (MIDDLE-REAR)
CC [012-031] (HIGH-REAR)
FRONT TAMPER HOME SENSOR PL22.10
J8724
GRY
CC [012-220] TAMPER AT HOME POSITION (L) +5VDC
J8700
REAR TAMPER HOME SENSOR PL22.9
J8726
CC [012-221] TAMPER AT HOME POSITION (L) +5VDC
+5VDC
012-221
012-223
012-224
012-263
ZONE D2
COMPILER SET PAPER
12.5
PRINT TO COMPILE TRAY
12.3
FAULT CODES
012-221
FRONT TAMPER HOME SENSOR ON FAIL
012-223
FRONT TAMPER HOME SENSOR OFF FAIL
012-224
REAR TAMPER HOME SENSOR OFF FAIL
012-263
REAR TAMPER HOME SENSOR ON FAIL
T712704-KOH

Figure 4 BSD 12.4 Integrated Finisher tamping and Offset

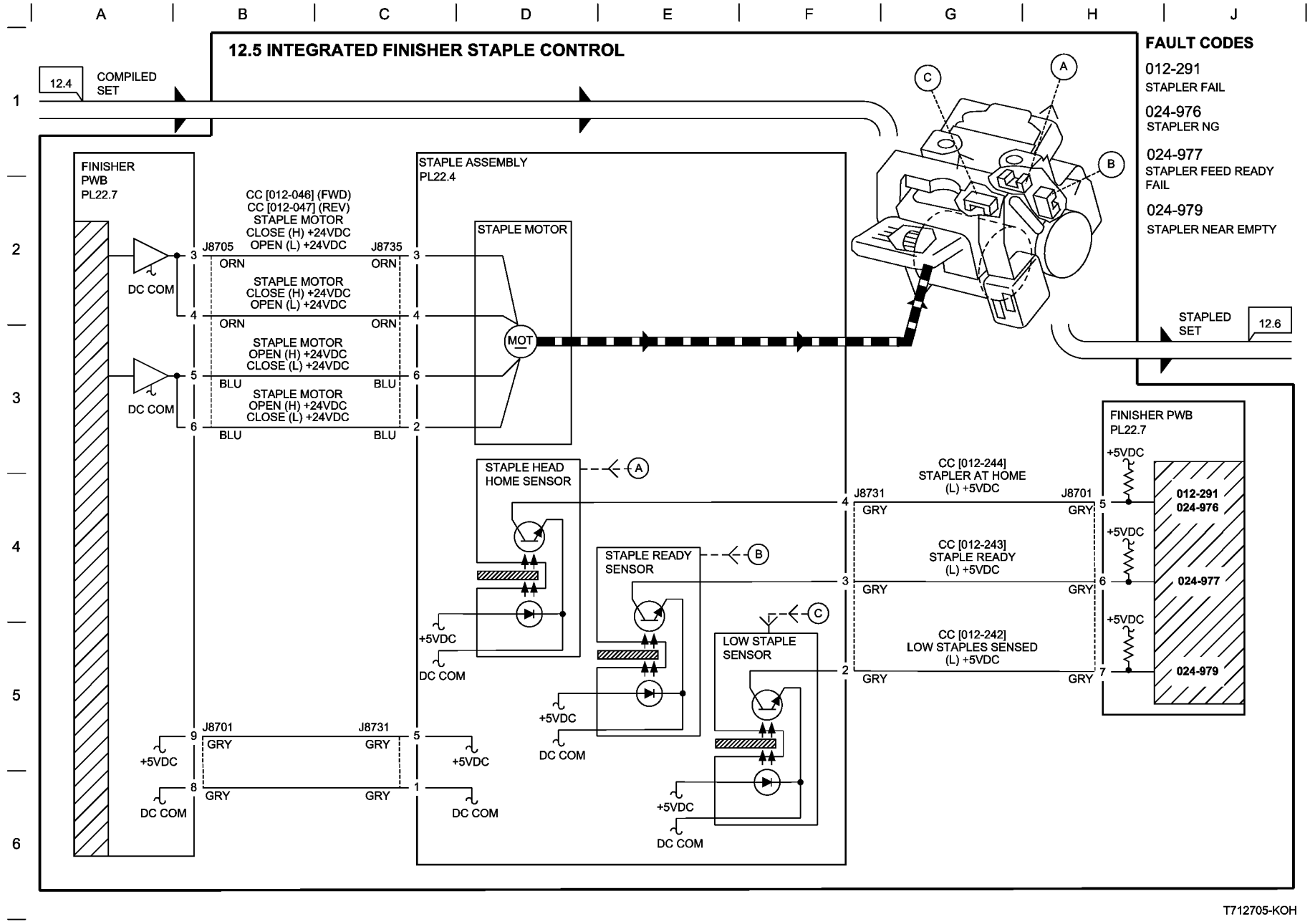
12.5 INTEGRATED FINISHER STAPLE CONTROL
12.4
COMPILED SET
FAULT CODES
012-291
STAPLER FAIL
024-976
STAPLER NG
024-977
STAPLER FEED READY FAIL
024-979
STAPLER NEAR EMPTY
STAPLED SET
12.6
FINISHER PWB PL22.7
STAPLE ASSEMBLY PL22.4
STAPLE MOTOR
MOT
CC [012-046] (FWD)
CC [012-047] (REV)
STAPLE MOTOR
CLOSE (H) +24VDC
OPEN (L) +24VDC
STAPLE MOTOR
CLOSE (H) +24VDC
OPEN (L) +24VDC
STAPLE MOTOR
OPEN (H) +24VDC
CLOSE (L) +24VDC
STAPLE MOTOR
OPEN (H) +24VDC
CLOSE (L) +24VDC
J8705
J8735
ORN
BLU
DC COM
STAPLE HEAD HOME SENSOR
STAPLE READY SENSOR
LOW STAPLE SENSOR
+5VDC
DC COM
J8701
J8731
GRY
CC [012-244]
STAPLER AT HOME
(L) +5VDC
CC [012-243]
STAPLE READY
(L) +5VDC
CC [012-242]
LOW STAPLES SENSED
(L) +5VDC
012-291
024-976
024-977
024-979
T712705-KOH

Figure 5 BSD 12.5 Integrated Finisher Staple Control

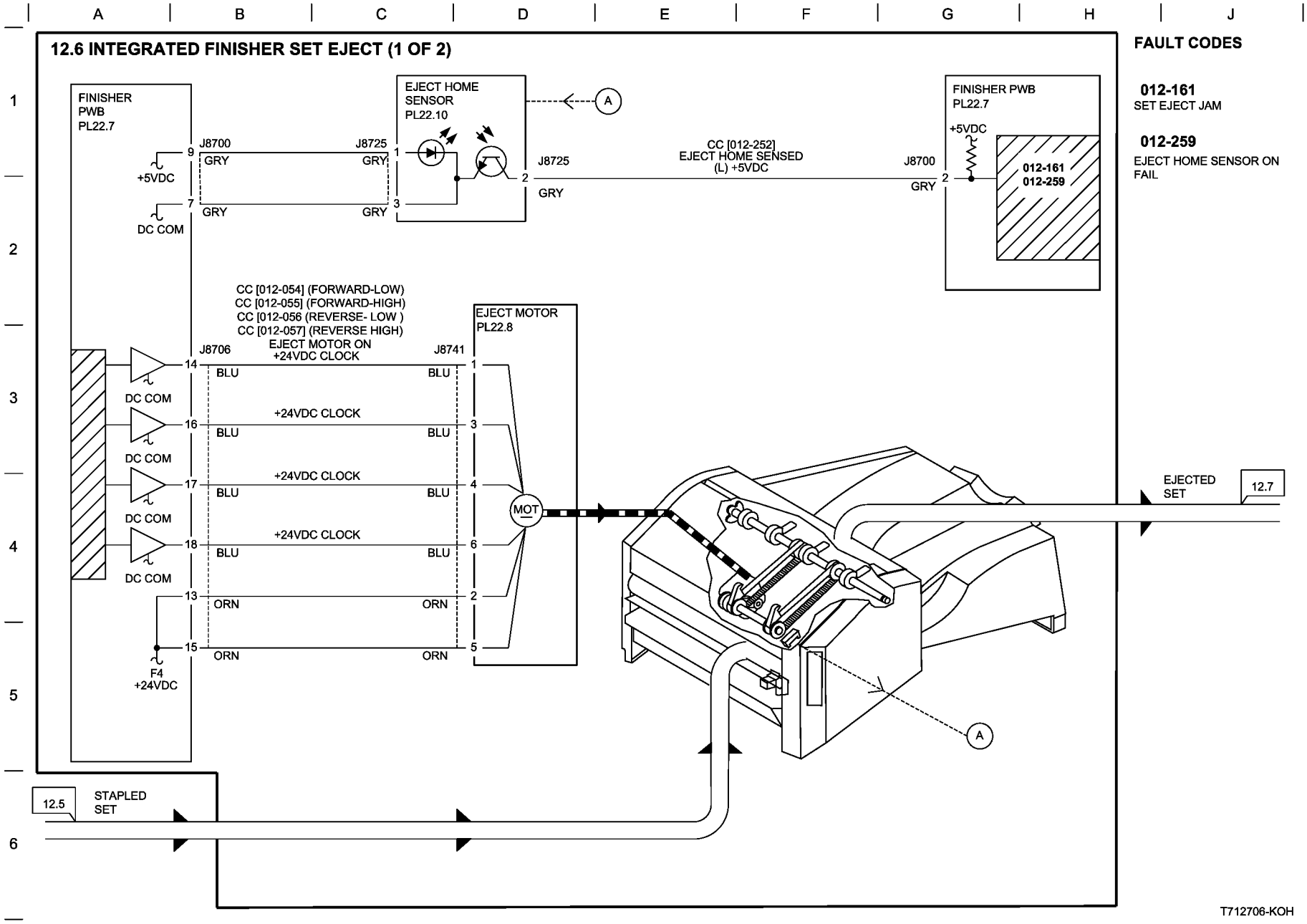
12.6 INTEGRATED FINISHER SET EJECT (1 OF 2)
FINISHER PWB PL22.7
EJECT HOME SENSOR PL22.10
FINISHER PWB PL22.7
+5VDC
012-161
012-259
J8700
J8725
GRY
CC [012-252]
EJECT HOME SENSED
(L) +5VDC
DC COM
CC [012-054] (FORWARD-LOW)
CC [012-055] (FORWARD-HIGH)
CC [012-056 (REVERSE- LOW)
CC [012-057] (REVERSE HIGH)
EJECT MOTOR ON
+24VDC CLOCK
J8706
J8741
BLU
ORN
EJECT MOTOR PL22.8
MOT
F4
+24VDC
EJECTED SET
12.7
12.5
STAPLED SET
A
FAULT CODES
012-161
SET EJECT JAM
012-259
EJECT HOME SENSOR ON FAIL
T712706-KOH

Figure 6 BSD 12.6 Integrated Finisher Set Eject (1 of 2)

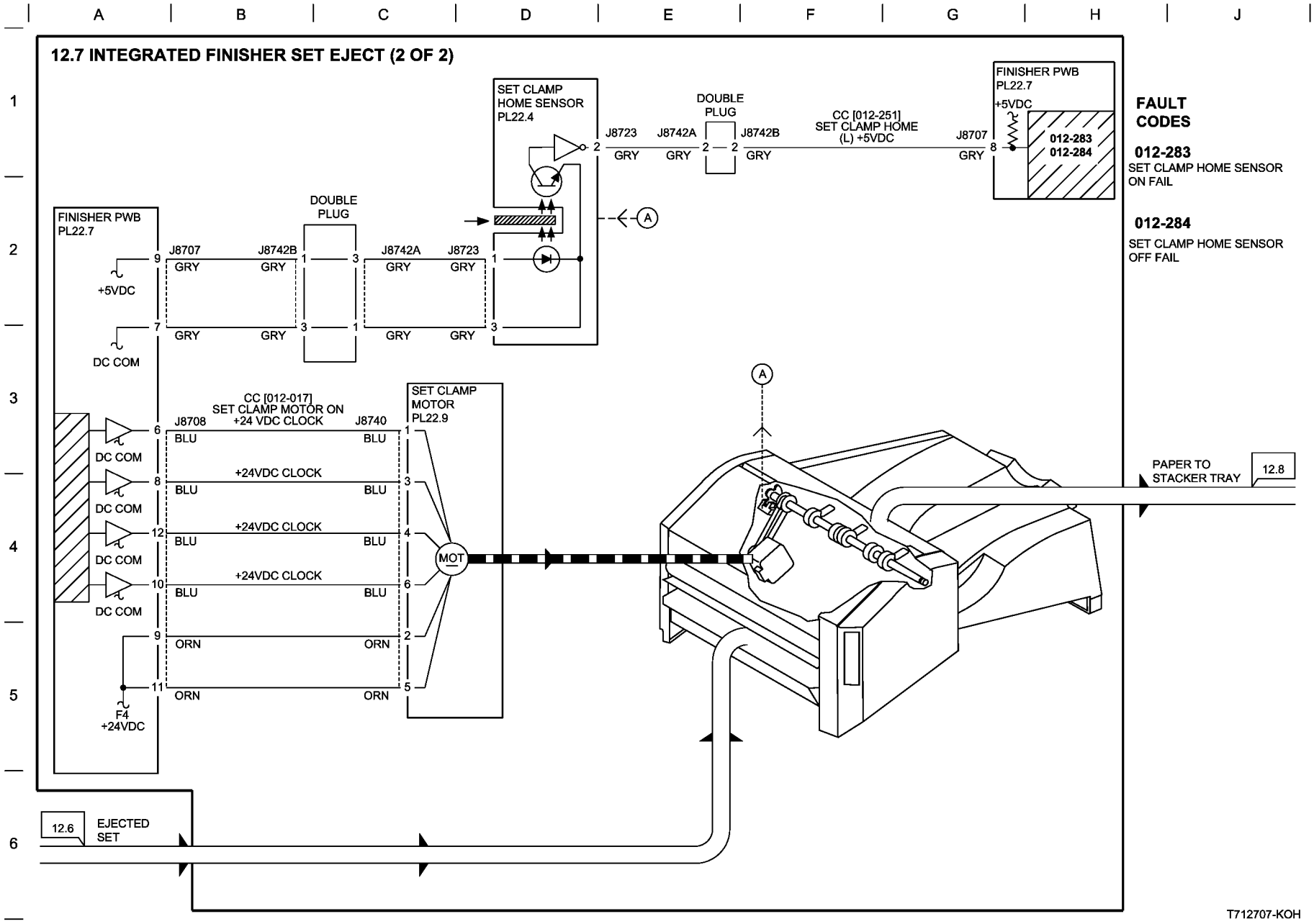

FAULT CODES

012-283
SET CLAMP HOME SENSOR ON FAIL

012-284
SET CLAMP HOME SENSOR OFF FAIL

Figure 7 BSD 12.7 Integrated Finisher Set Eject (2 of 2)

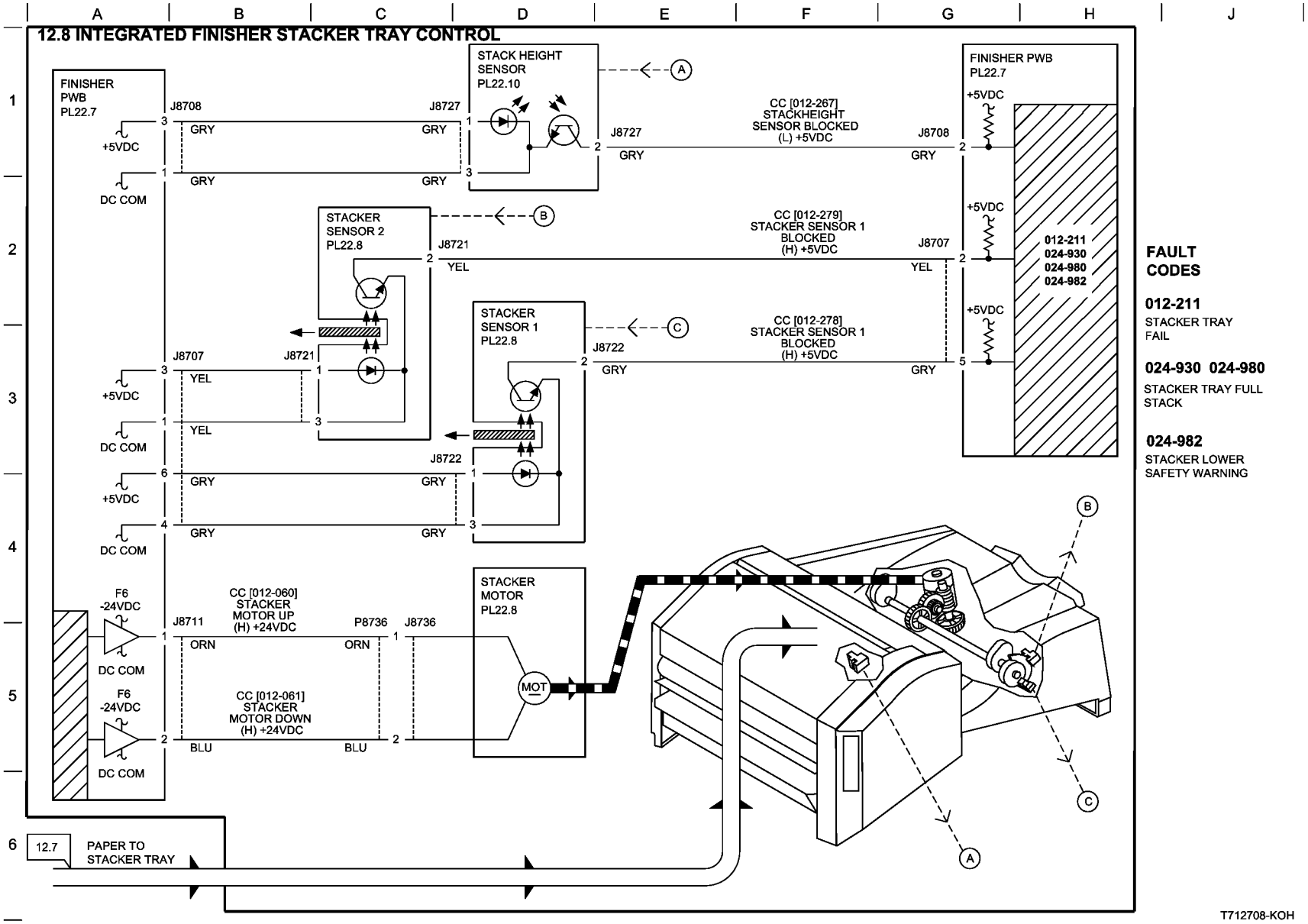
12.8 INTEGRATED FINISHER STACKER TRAY CONTROL
FINISHER PWB PL22.7
STACK HEIGHT SENSOR PL22.10
STACKER SENSOR 2 PL22.8
STACKER SENSOR 1 PL22.8
STACKER MOTOR PL22.8
FINISHER PWB PL22.7
J8708
J8727
J8721
J8707
J8722
J8711
P8736
J8736
GRY
YEL
ORN
BLU
+5VDC
DC COM
F6 -24VDC
CC [012-267] STACKHEIGHT SENSOR BLOCKED (L) +5VDC
CC [012-279] STACKER SENSOR 1 BLOCKED (H) +5VDC
CC [012-278] STACKER SENSOR 1 BLOCKED (H) +5VDC
CC [012-060] STACKER MOTOR UP (H) +24VDC
CC [012-061] STACKER MOTOR DOWN (H) +24VDC
012-211
024-930
024-980
024-982
MOT
12.7
PAPER TO STACKER TRAY
FAULT CODES
012-211
STACKER TRAY FAIL
024-930 024-980
STACKER TRAY FULL STACK
024-982
STACKER LOWER SAFETY WARNING
T712708-KOH

Figure 8 BSD 12.8 Integrated Finisher Stacker Tray Control

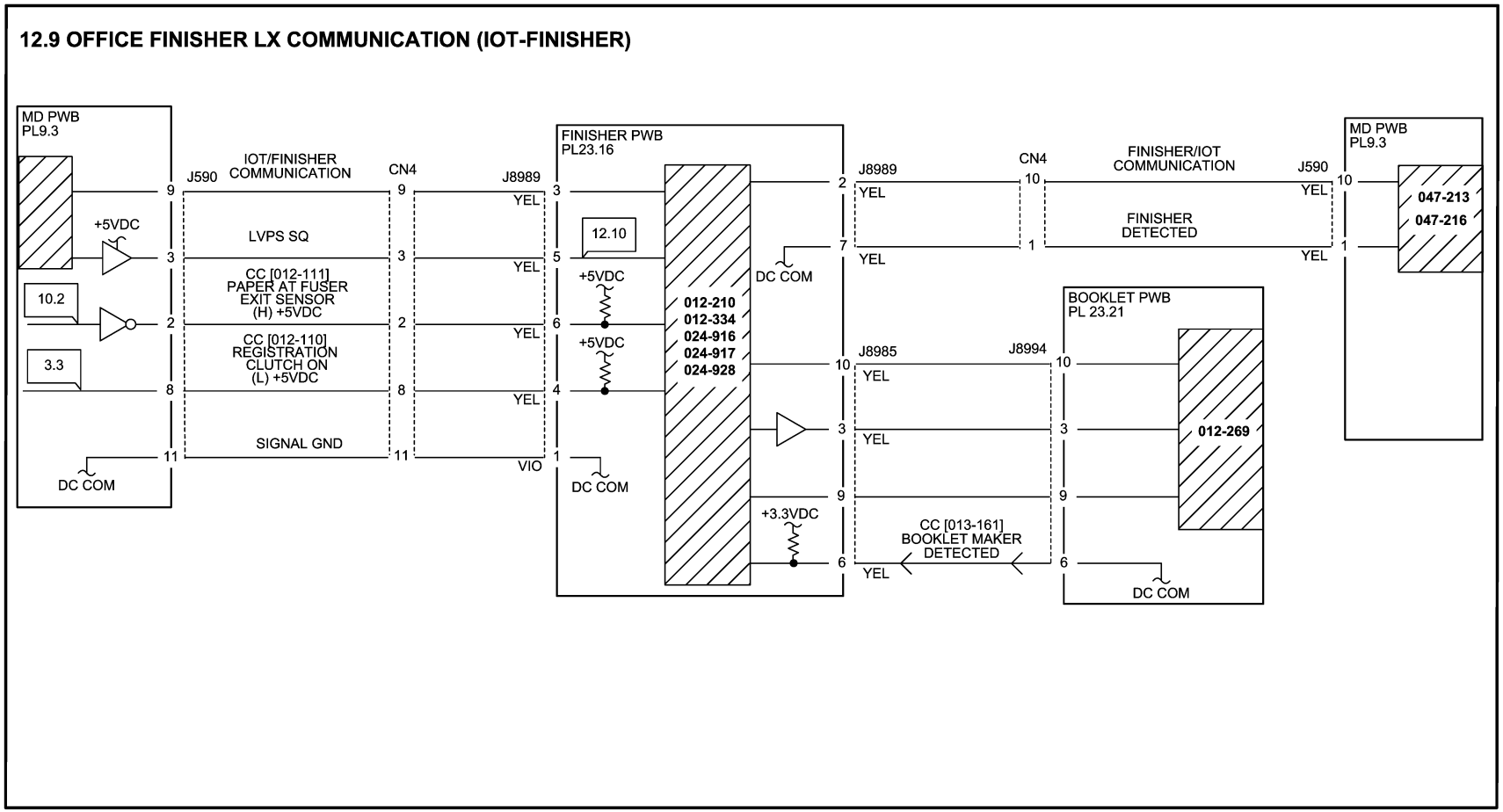
12.9 OFFICE FINISHER LX COMMUNICATION (IOT-FINISHER)
MD PWB
PL9.3
+5VDC
10.2
3.3
DC COM
J590
IOT/FINISHER
COMMUNICATION
LVPS SQ
CC [012-111]
PAPER AT FUSER
EXIT SENSOR
(H) +5VDC
CC [012-110]
REGISTRATION
CLUTCH ON
(L) +5VDC
SIGNAL GND
CN4
J8989
YEL
VIO
FINISHER PWB
PL23.16
12.10
+5VDC
+5VDC
DC COM
012-210
012-334
024-916
024-917
024-928
+3.3VDC
J8985
J8994
CC [013-161]
BOOKLET MAKER
DETECTED
BOOKLET PWB
PL 23.21
012-269
FINISHER/IOT
COMMUNICATION
FINISHER
DETECTED
047-213
047-216
T712801-OAK

Figure 9 BSD 12.9 Office Finisher LX Communication (IOT-Finisher)

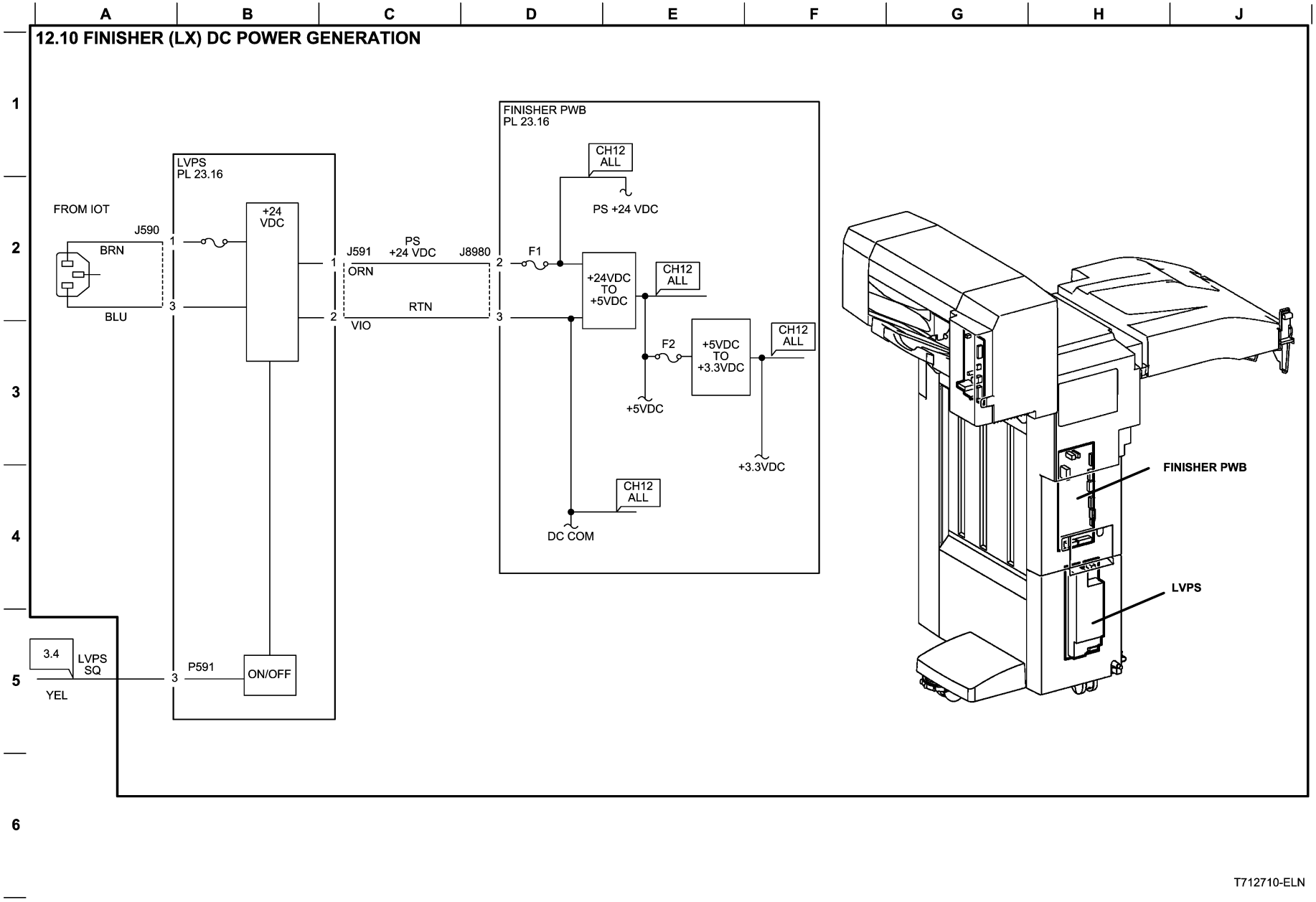

Figure 10 BSD 12.10 Office Finisher LX DC Power Generation

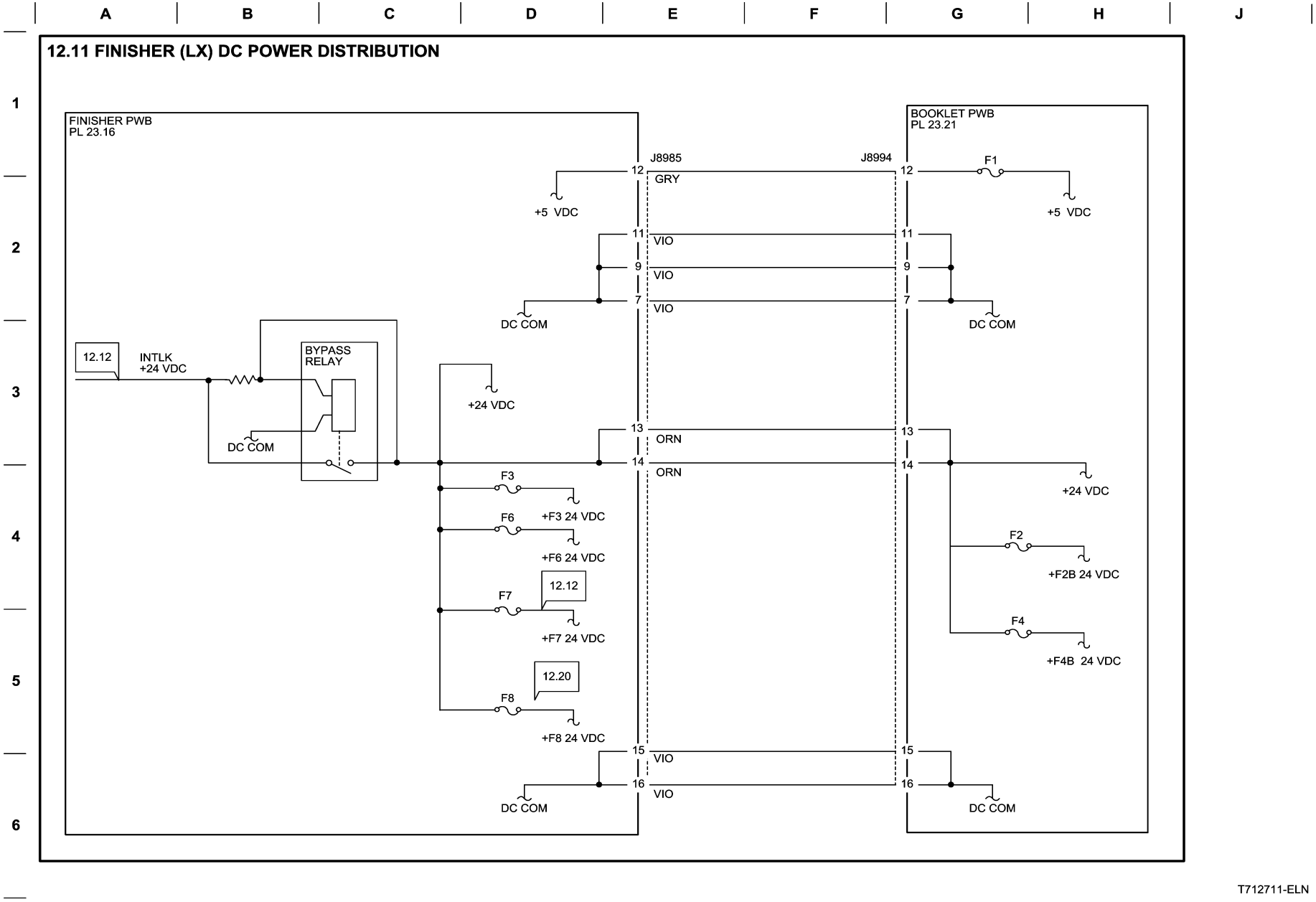

T712711-ELN

Figure 11 BSD 12.11 Office Finisher LX DC Power Distribution

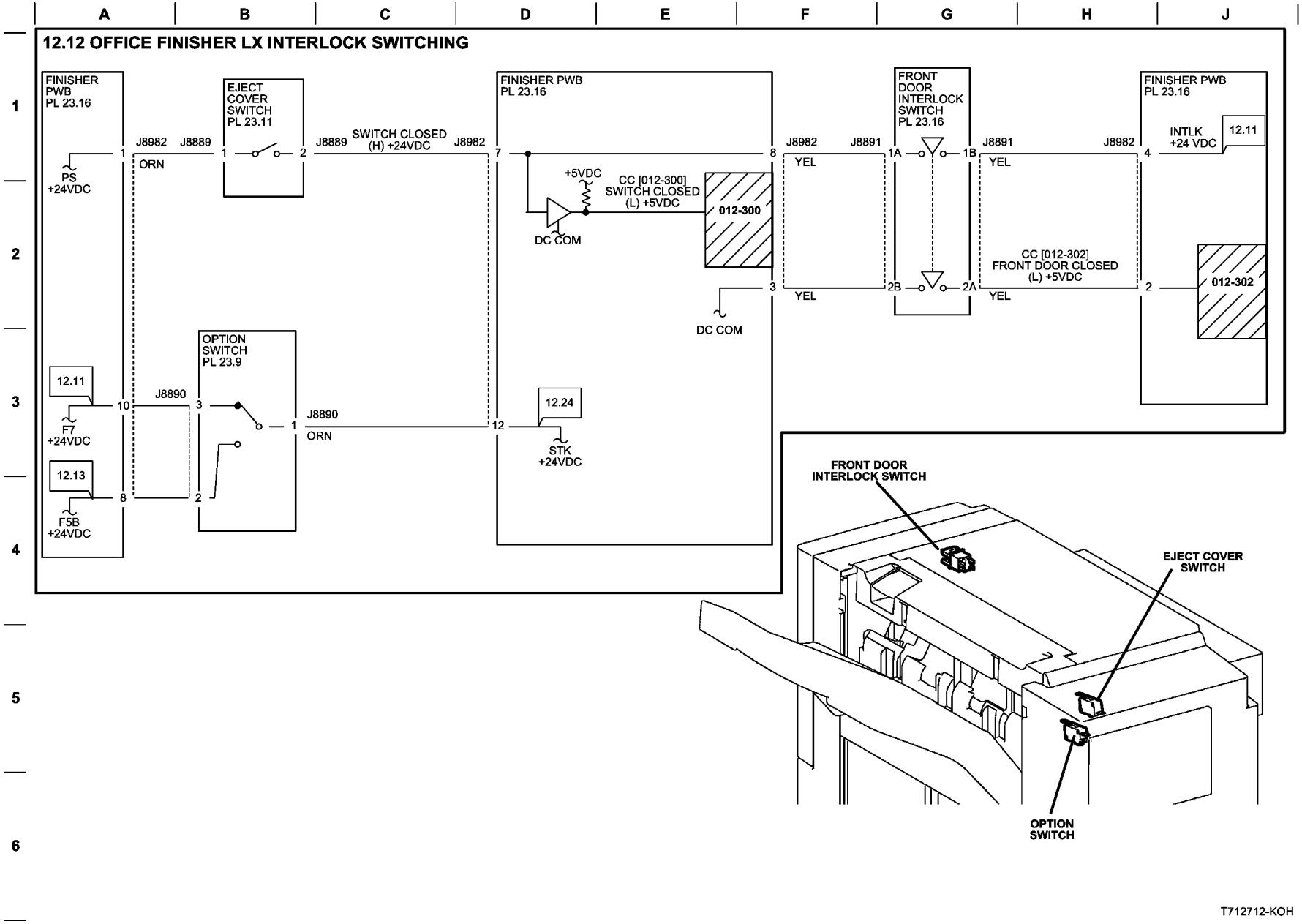

Figure 12 BSD 12.12 Office Finisher LX Interlock Switching

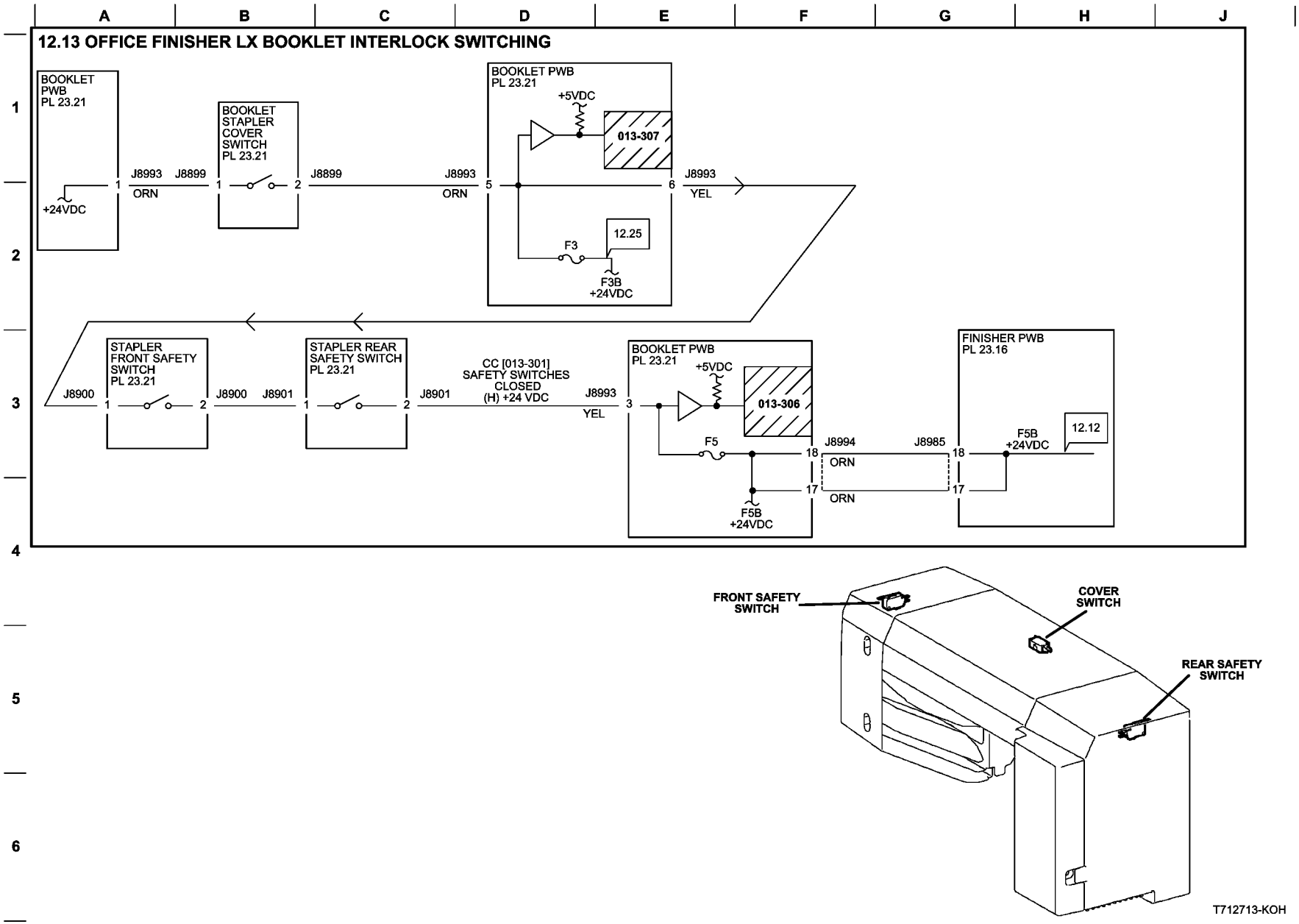

Figure 13 BSD 12.13 Office Finisher LX Booklet Interlock Switching

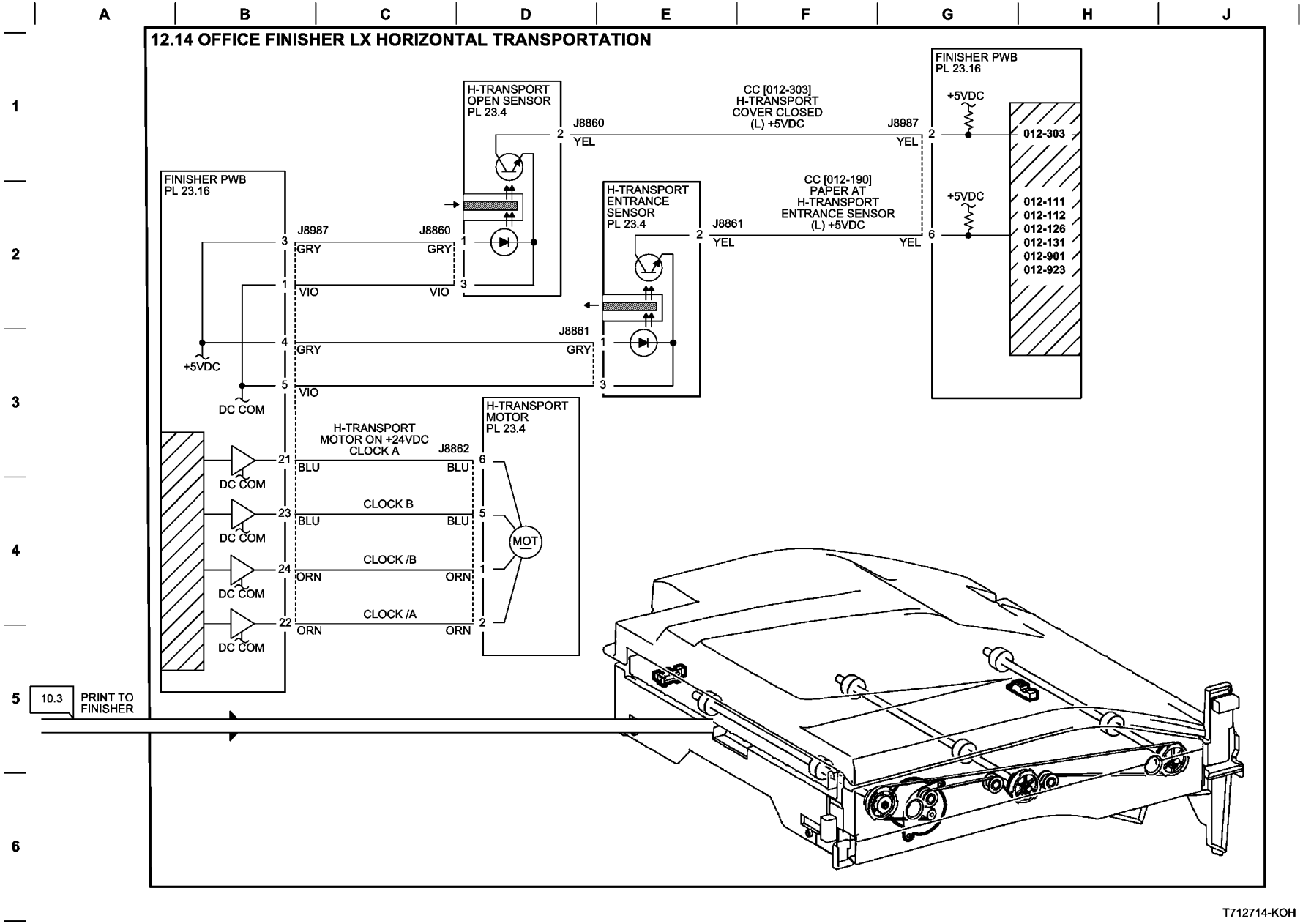

Figure 14 BSD 12.14 Office Finisher LX Horizontal Transportation

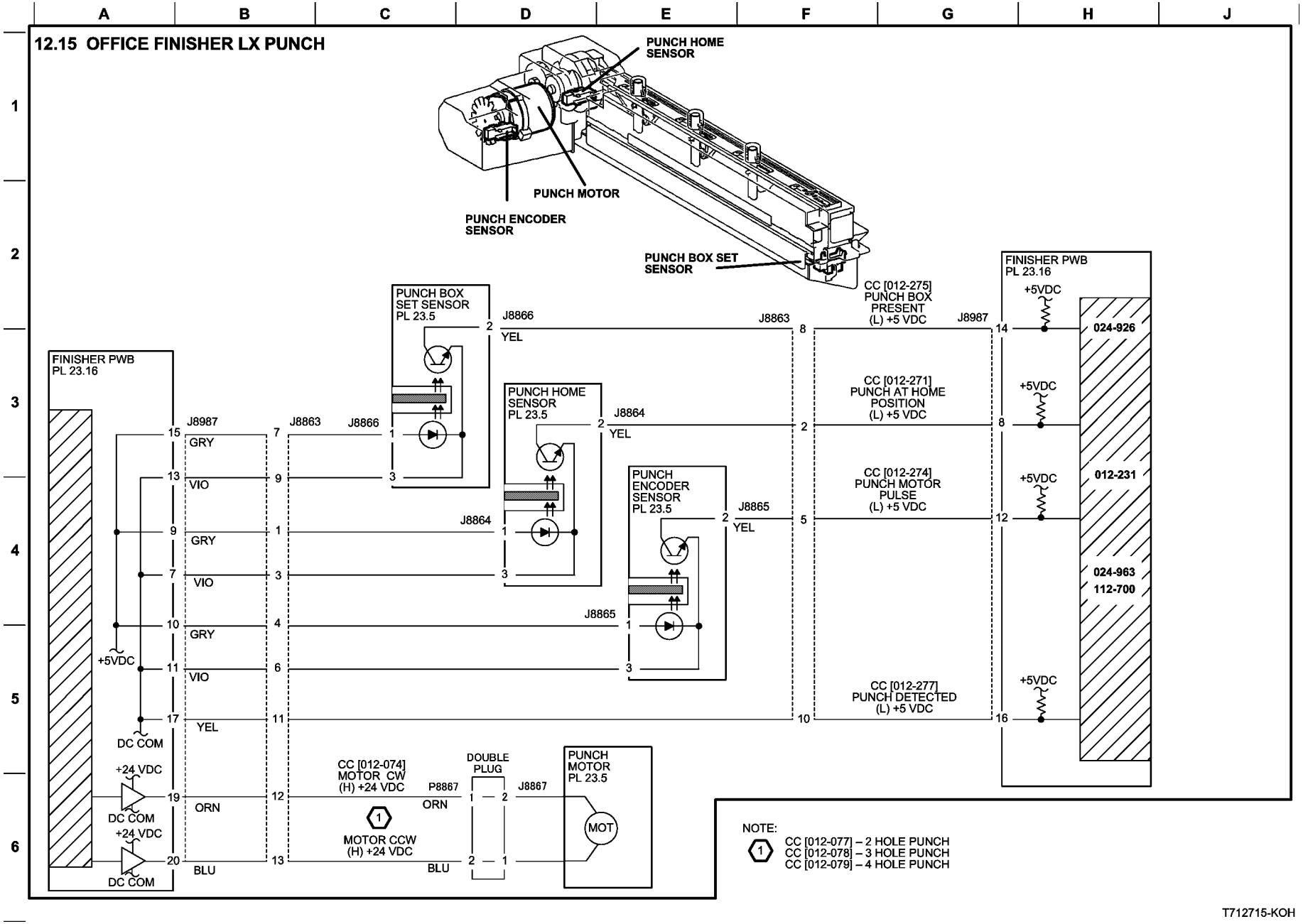

Figure 15 BSD 12.15 Office Finisher LX Punch

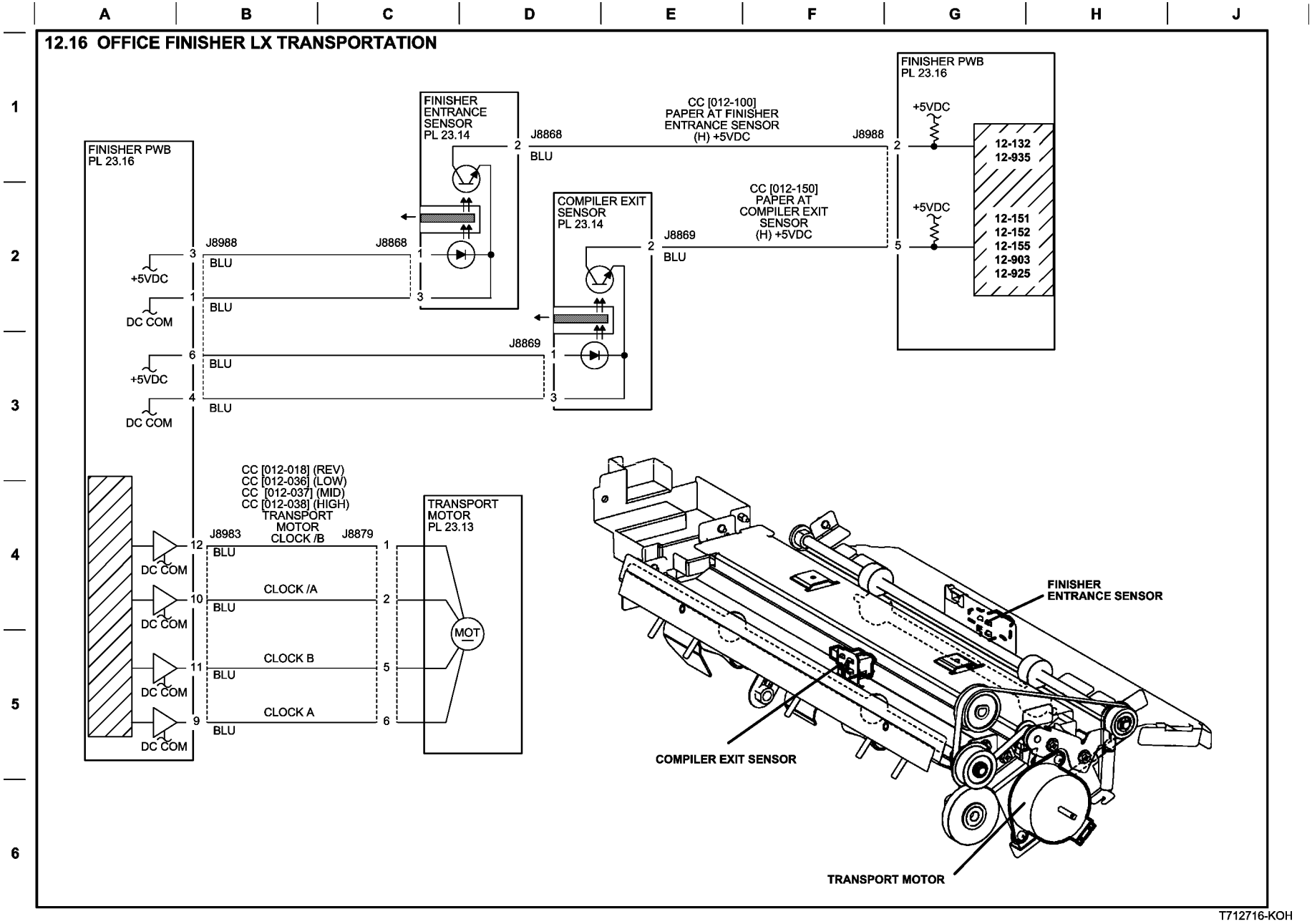

Figure 16 BSD 12.16 Office Finisher LX Transportation

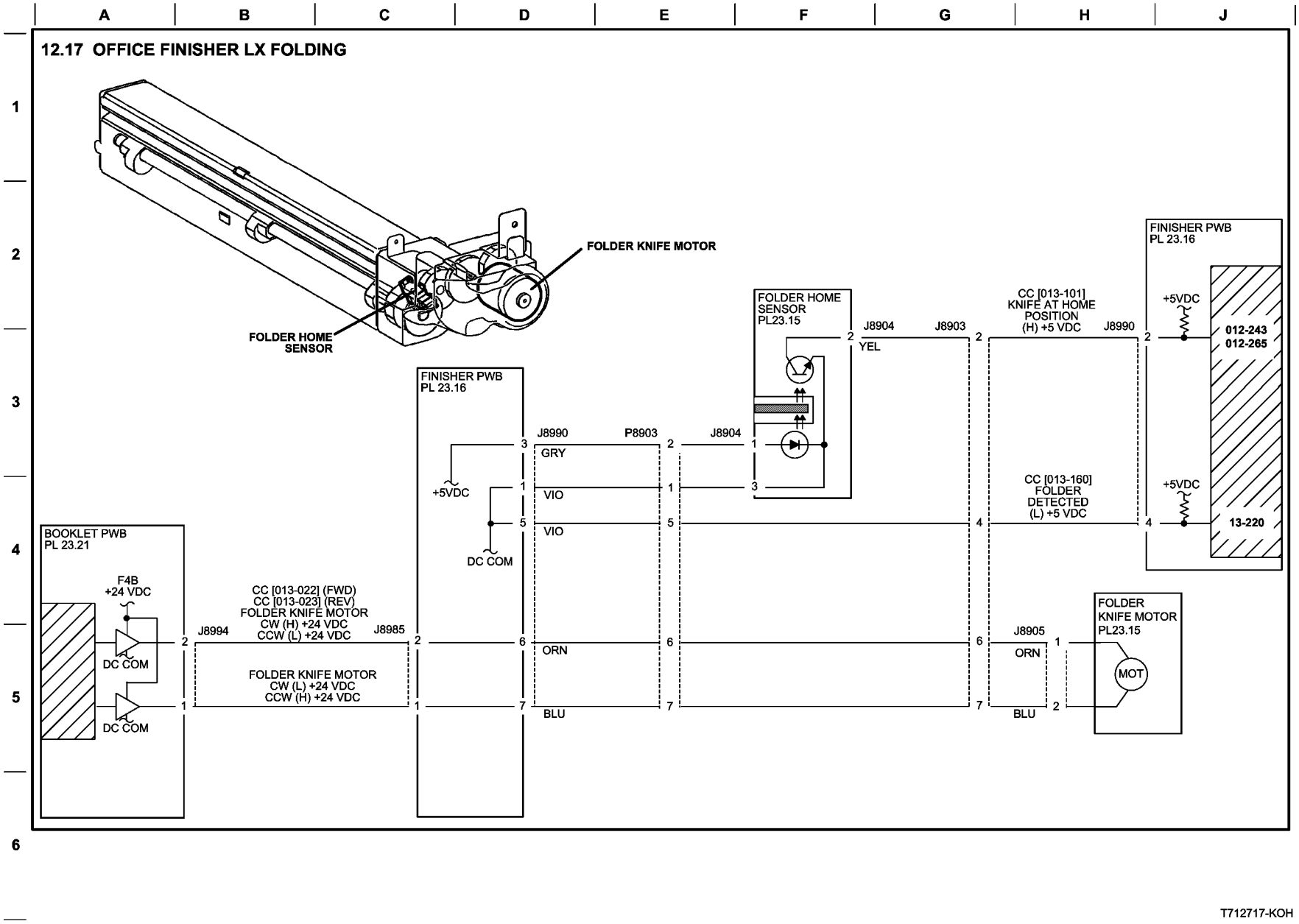

Figure 17 BSD 12.17 Office Finisher LX Folding

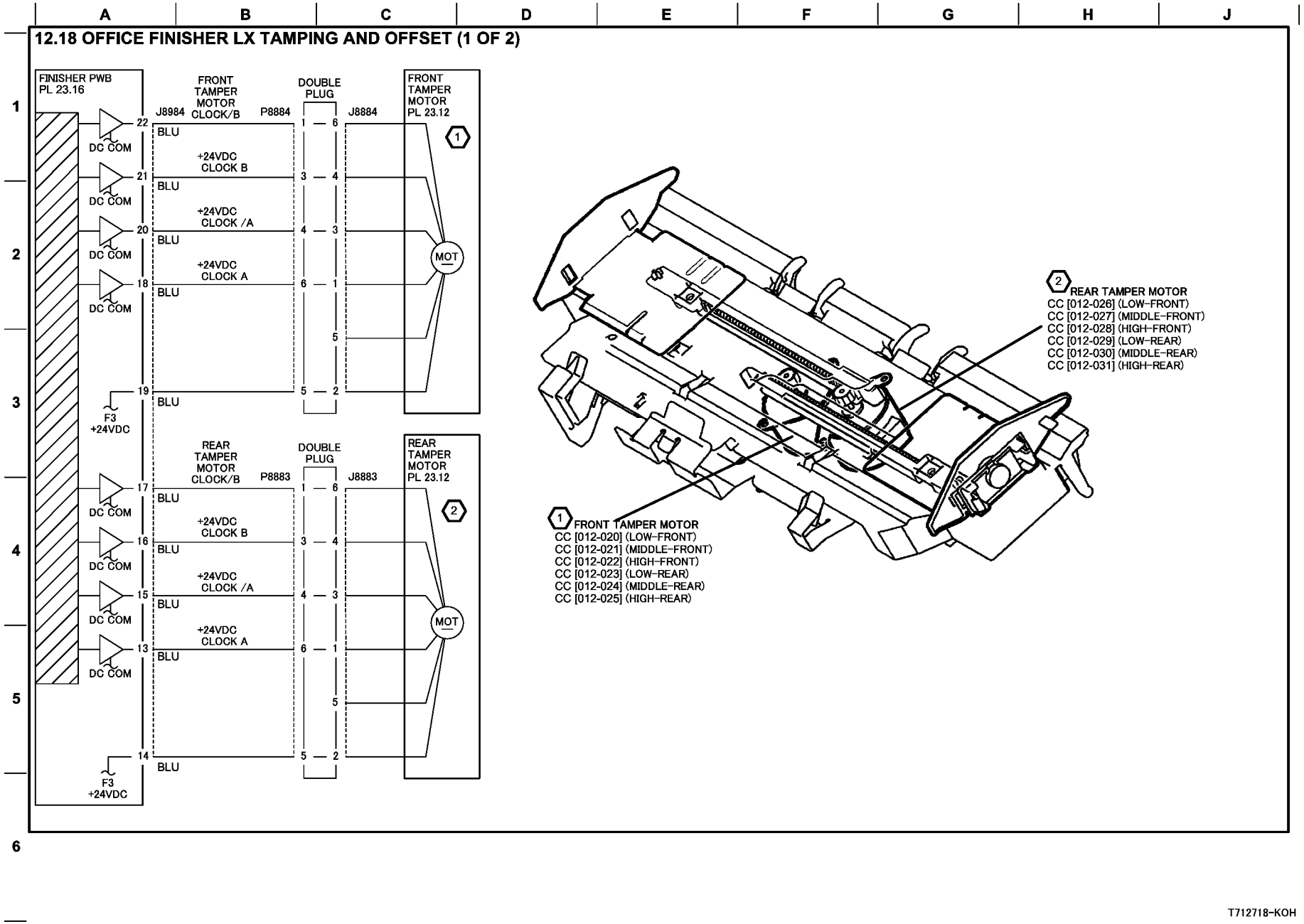

Figure 18 BSD 12.18 Office Finisher LX Tamping and offset (1 of 2)

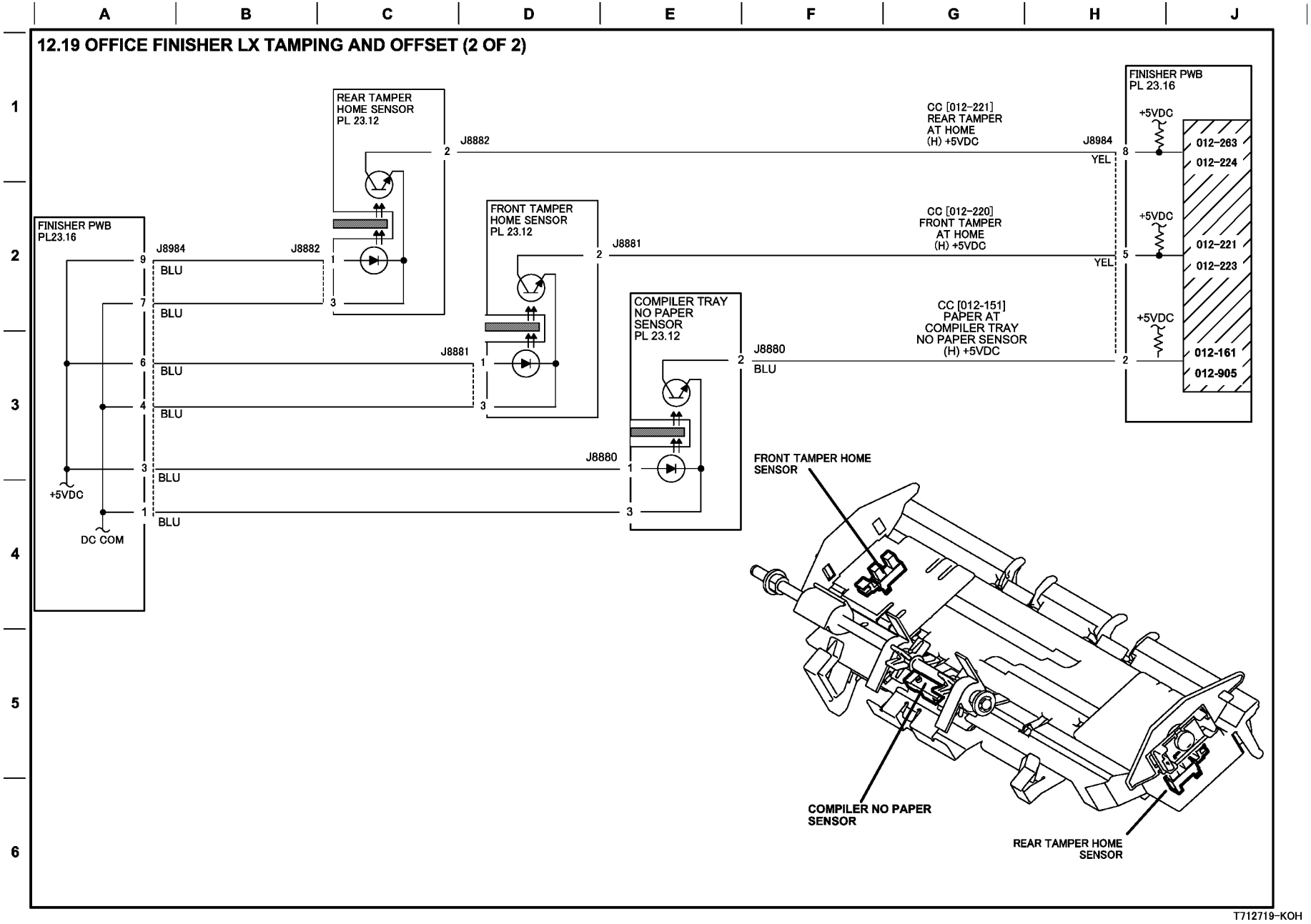

Figure 19 BSD 12.19 Office Finisher LX Tamping and Offset (2 of 2)

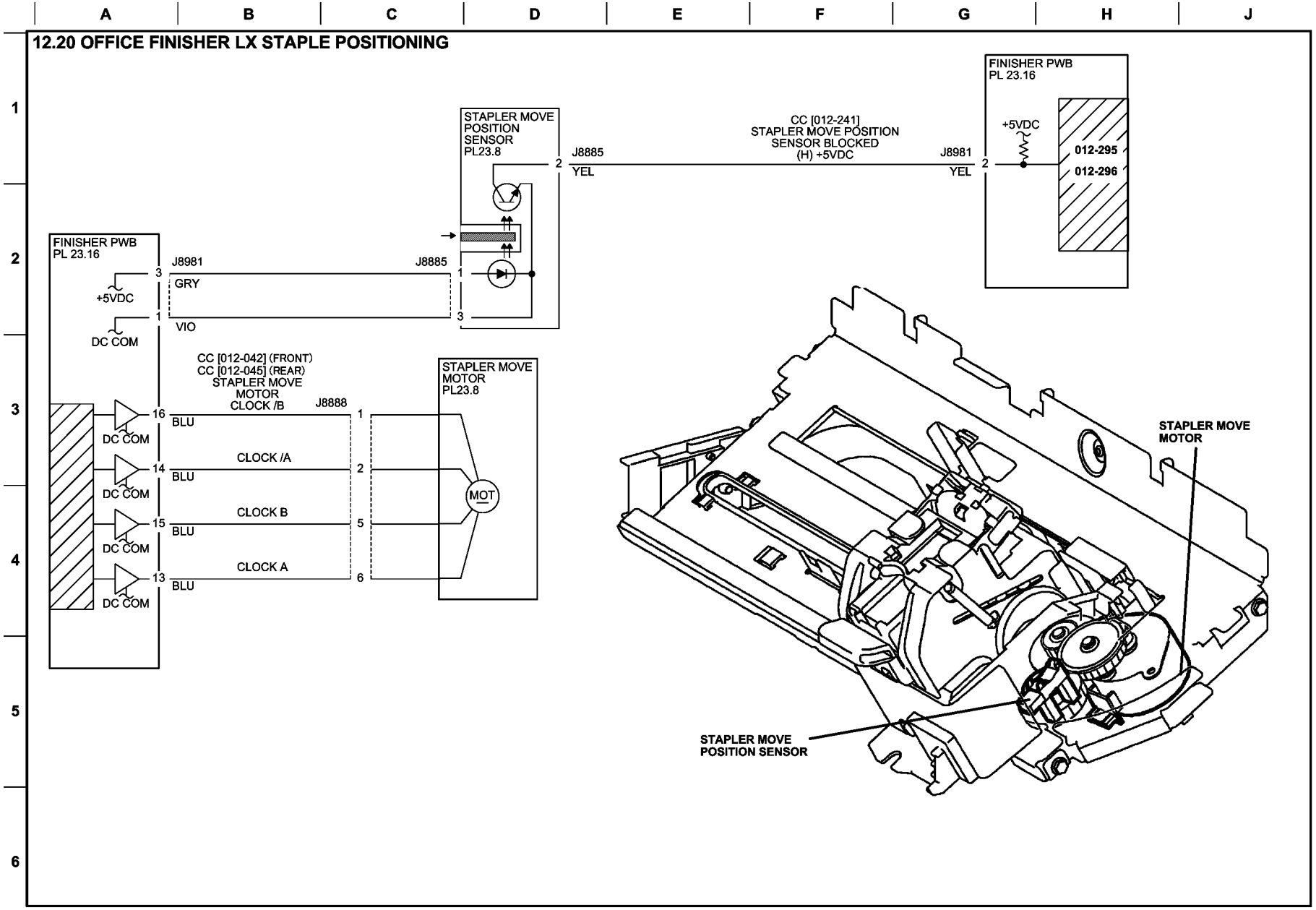

T712720-KOH

Figure 20 BSD 12.20 Office Finisher LX Staple Positioning

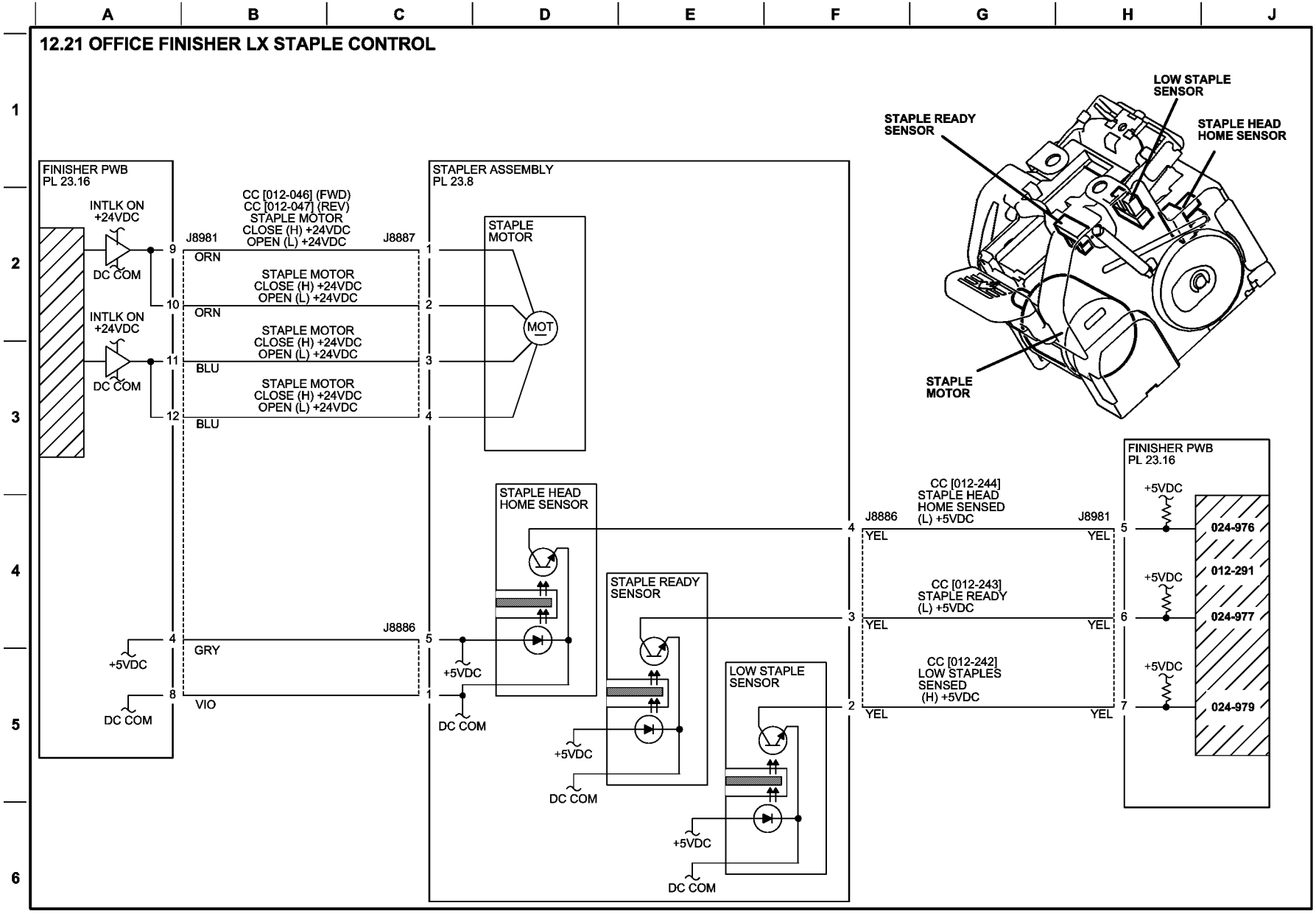

Figure 21 BSD 12.21 Office Finisher LX Staple Control

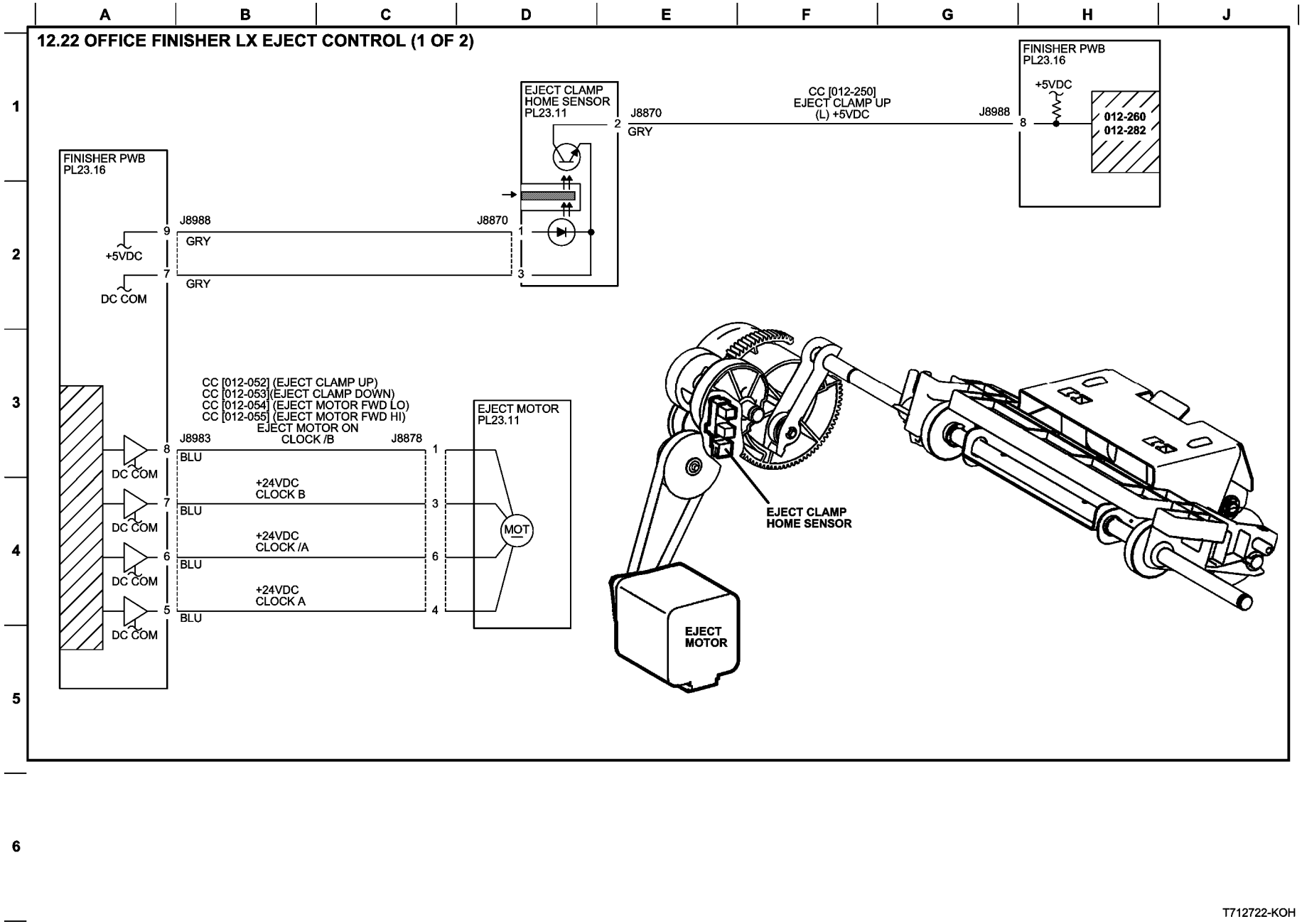

T712722-KOH

Figure 22 BSD 12.22 Office Finisher LX Eject Control (1 of 2)

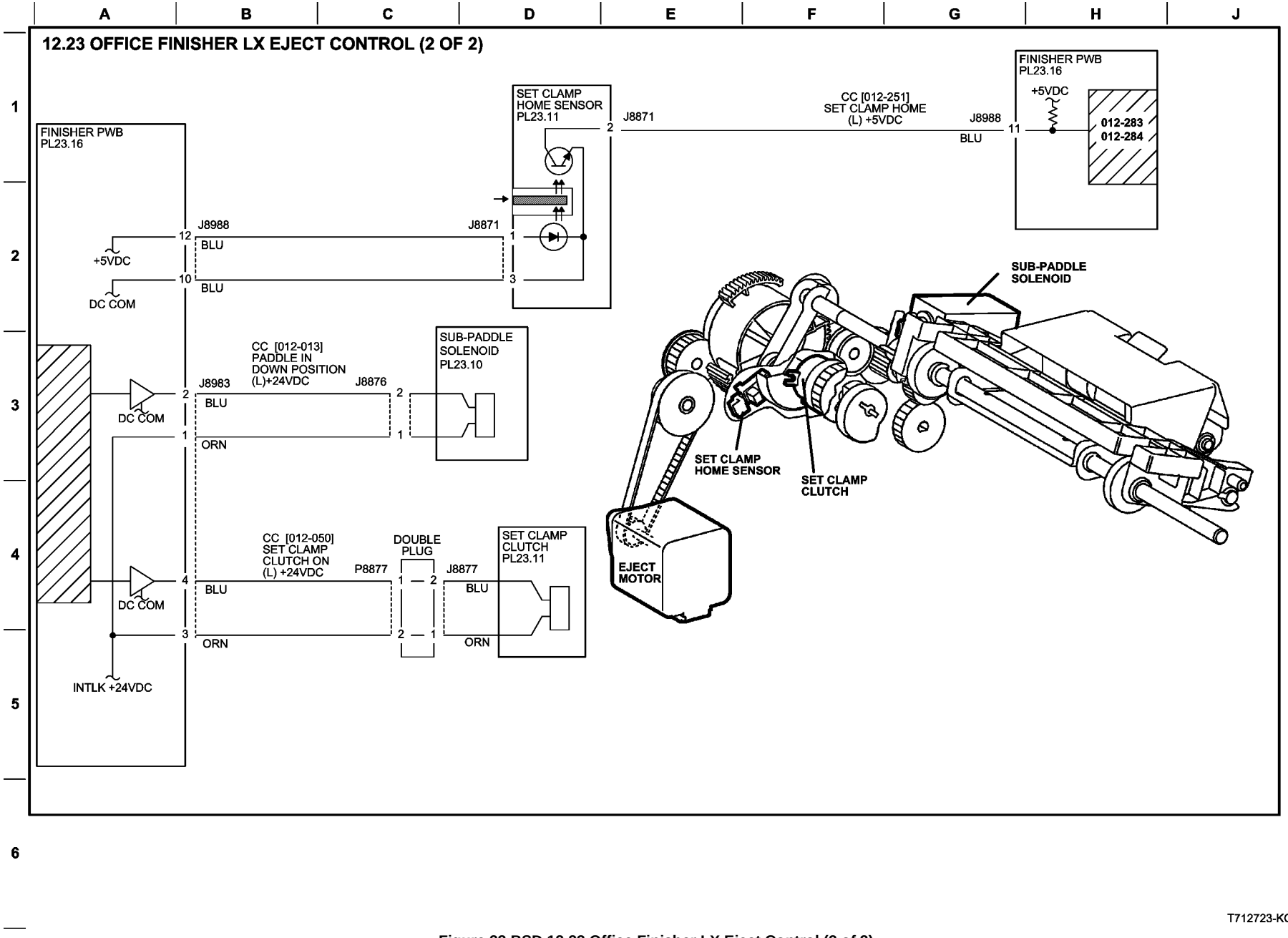

Figure 23 BSD 12.23 Office Finisher LX Eject Control (2 of 2)

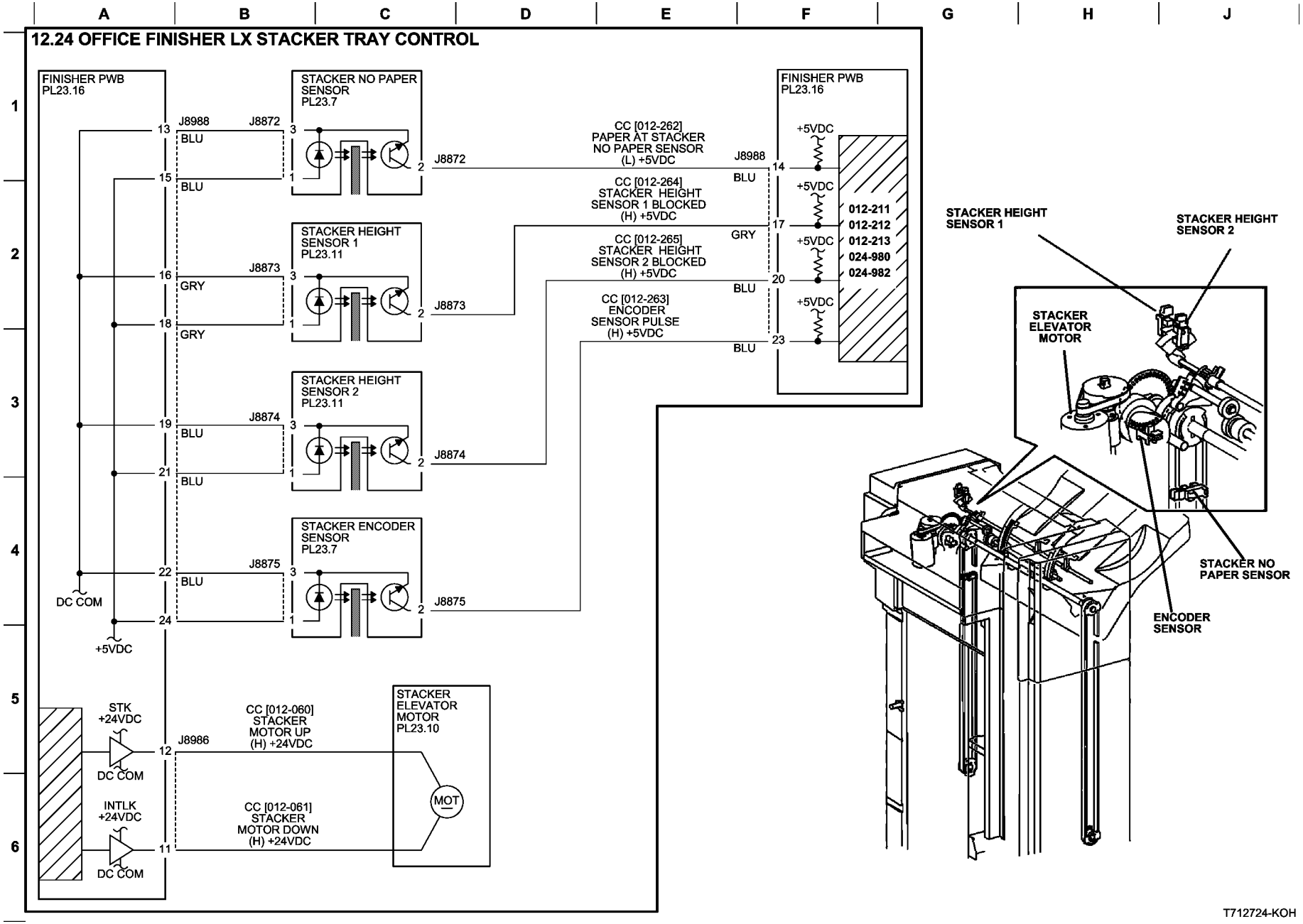

Figure 24 BSD 12.24 Office Finisher LX Stacker Tray Control

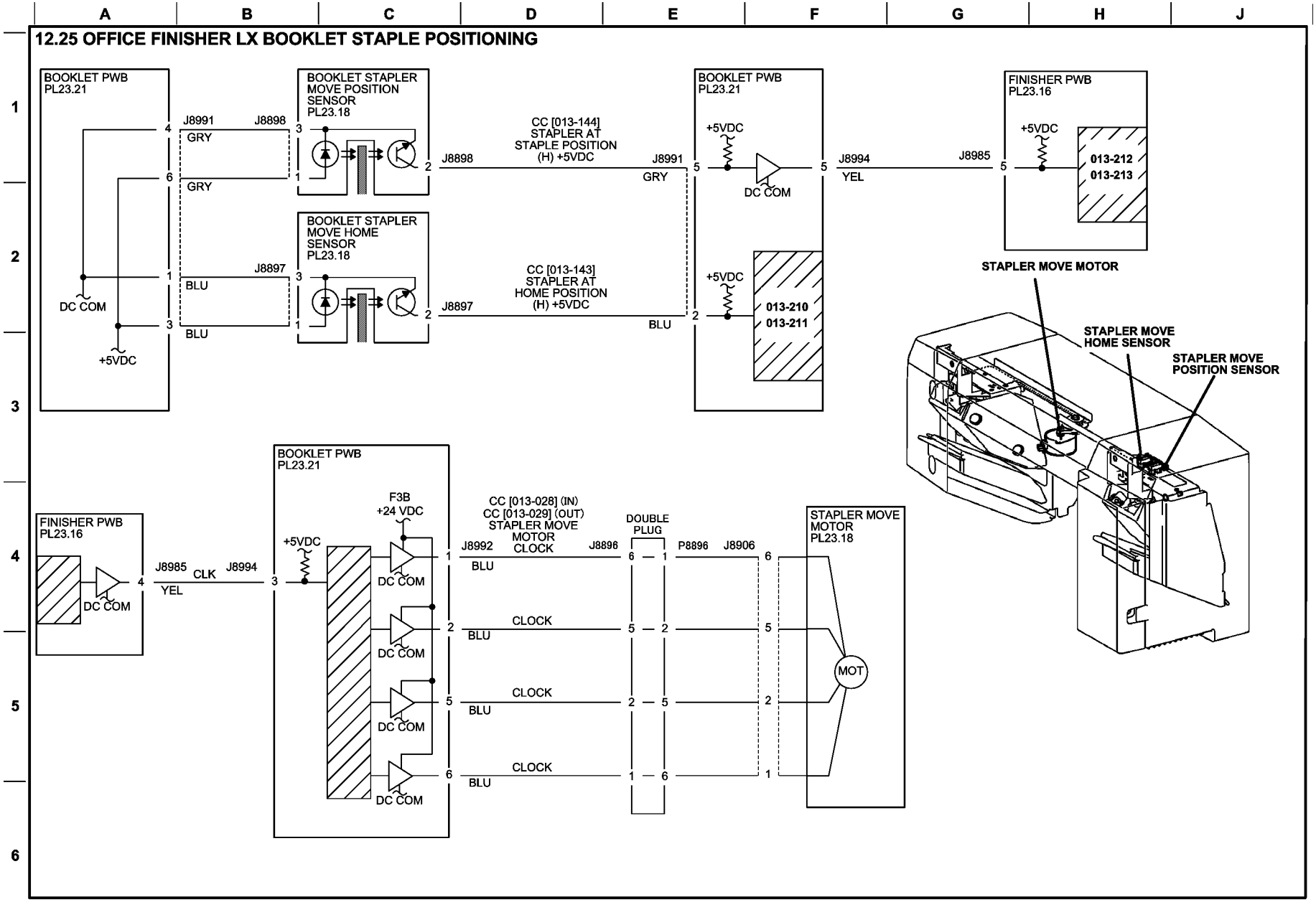

Figure 25 BSD 12.25 Office Finisher LX Booklet Staple Positioning

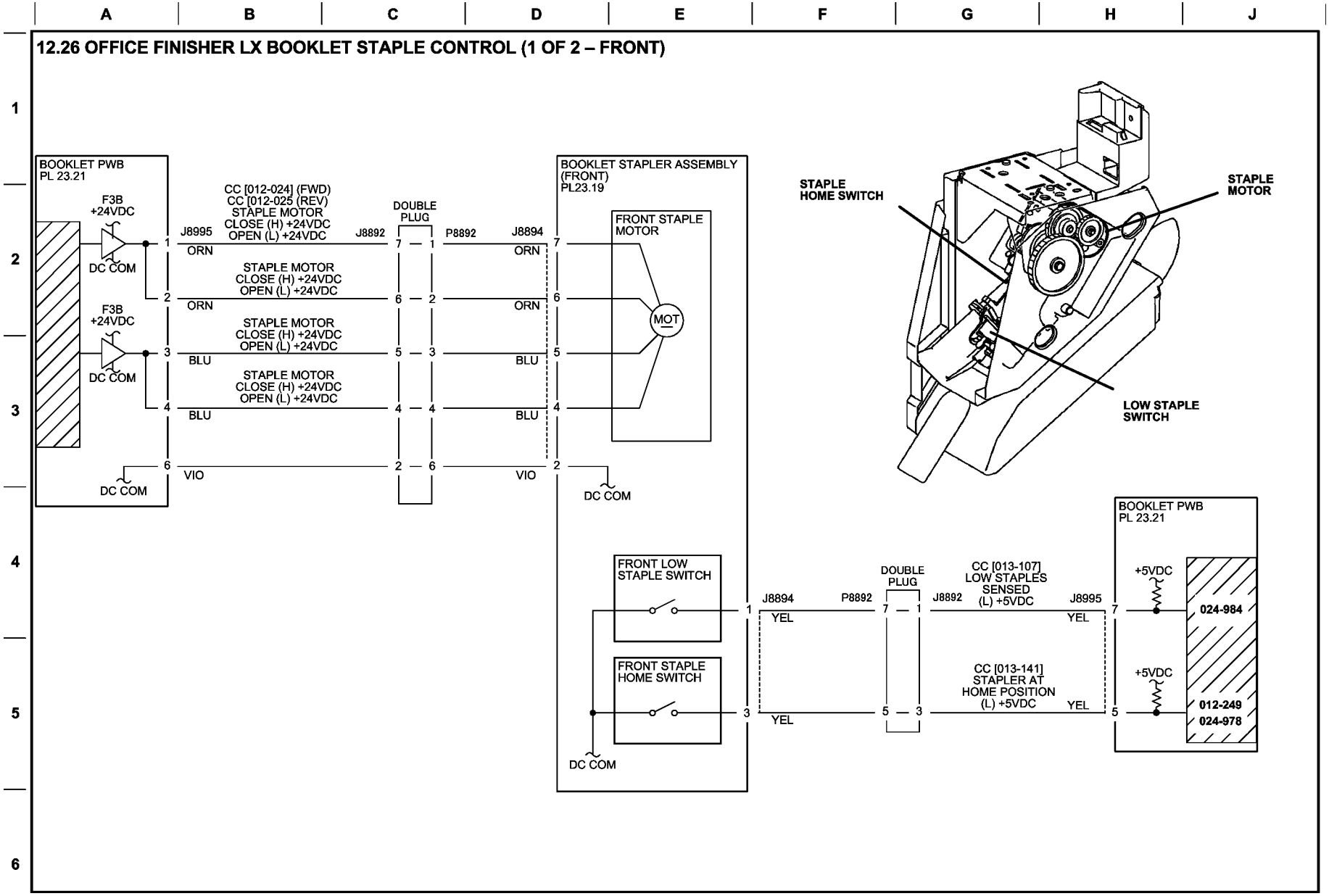

Figure 26 BSD 12.26 Office Finisher LX Booklet Staple Control (1 of 2 - Front)

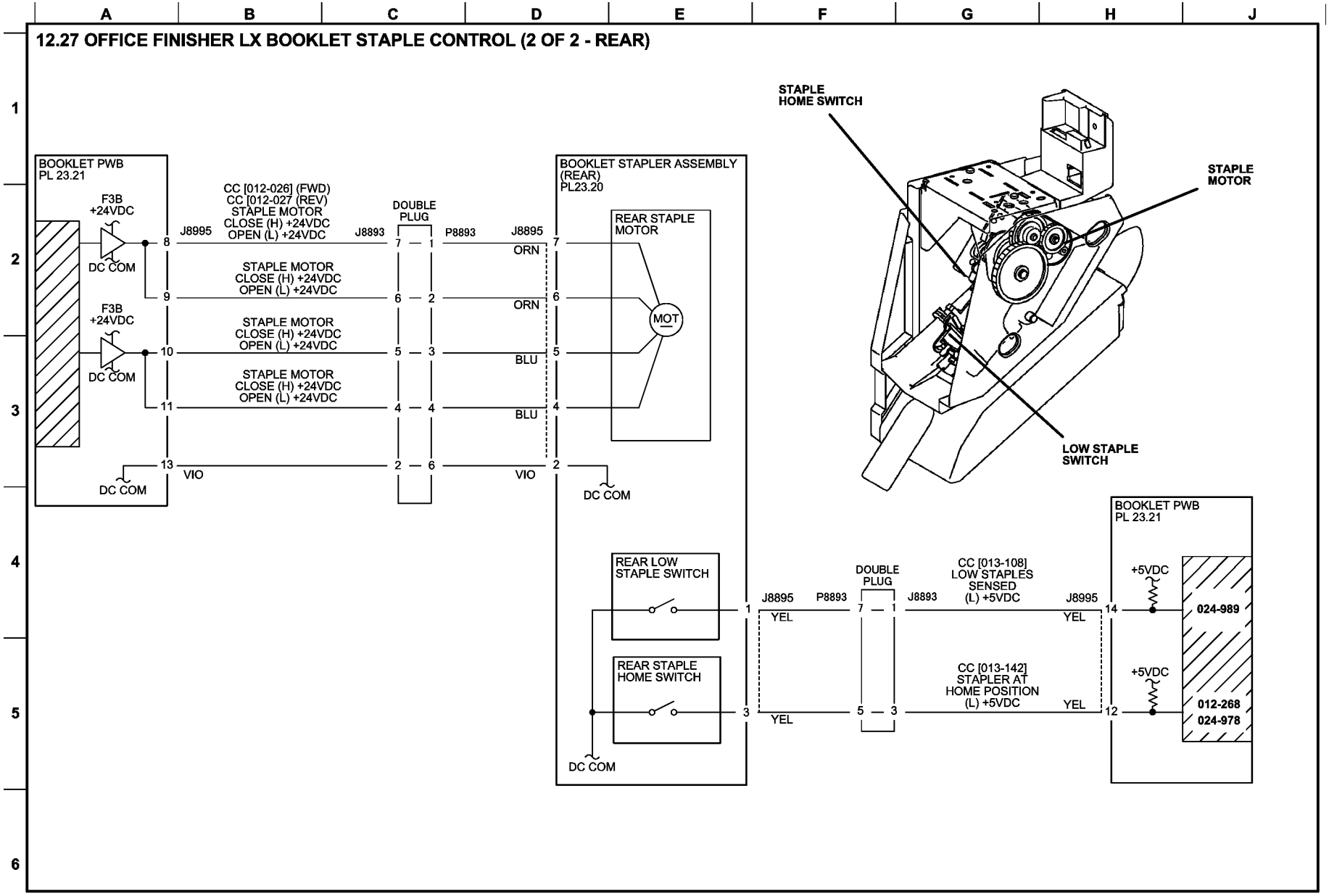

T712727-KOH

Figure 27 BSD 12.27 Office Finisher LX Booklet Staple Control (2 of 2 -Rear)

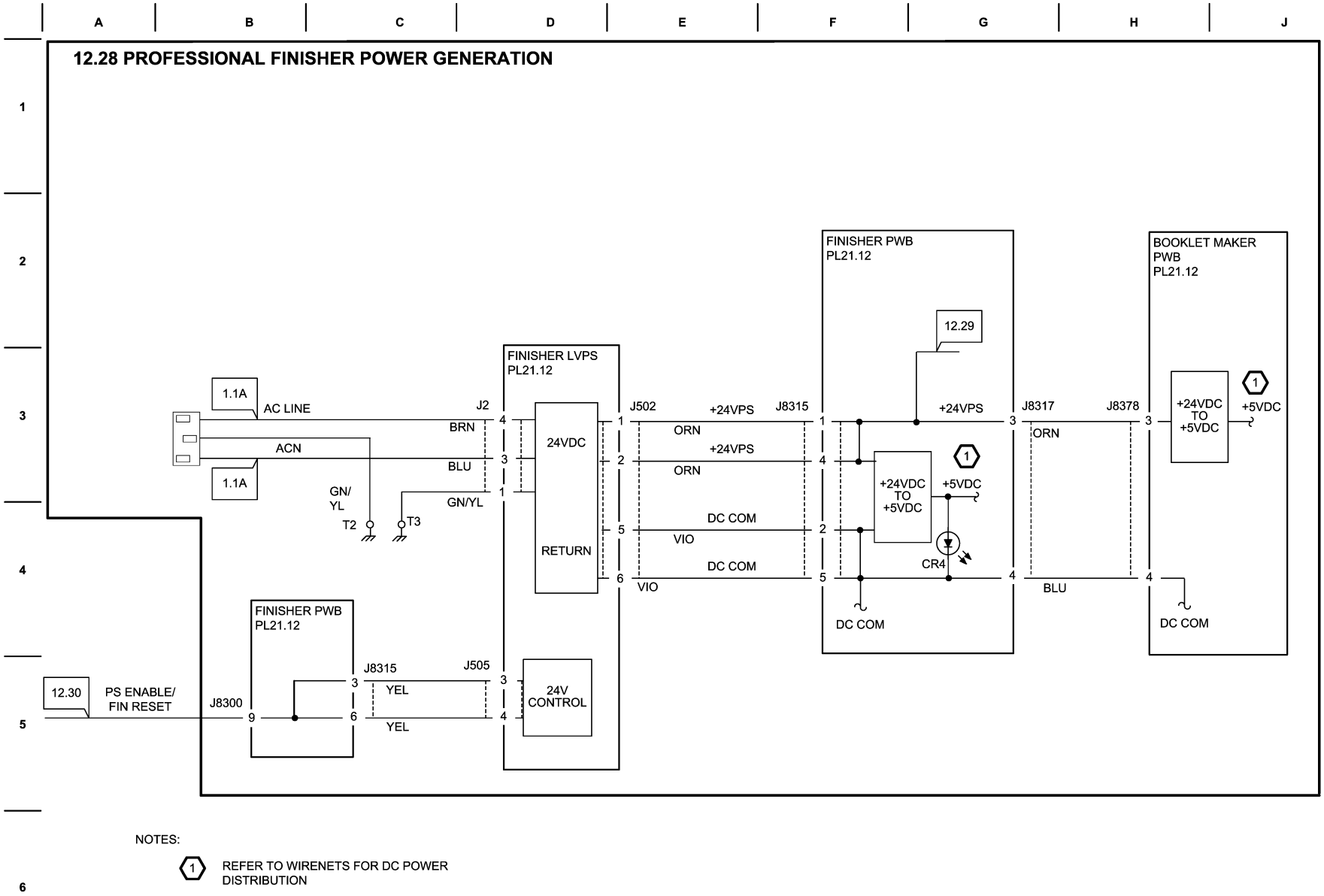

Figure 28 BSD 12.28 Professional Finisher Power Generation

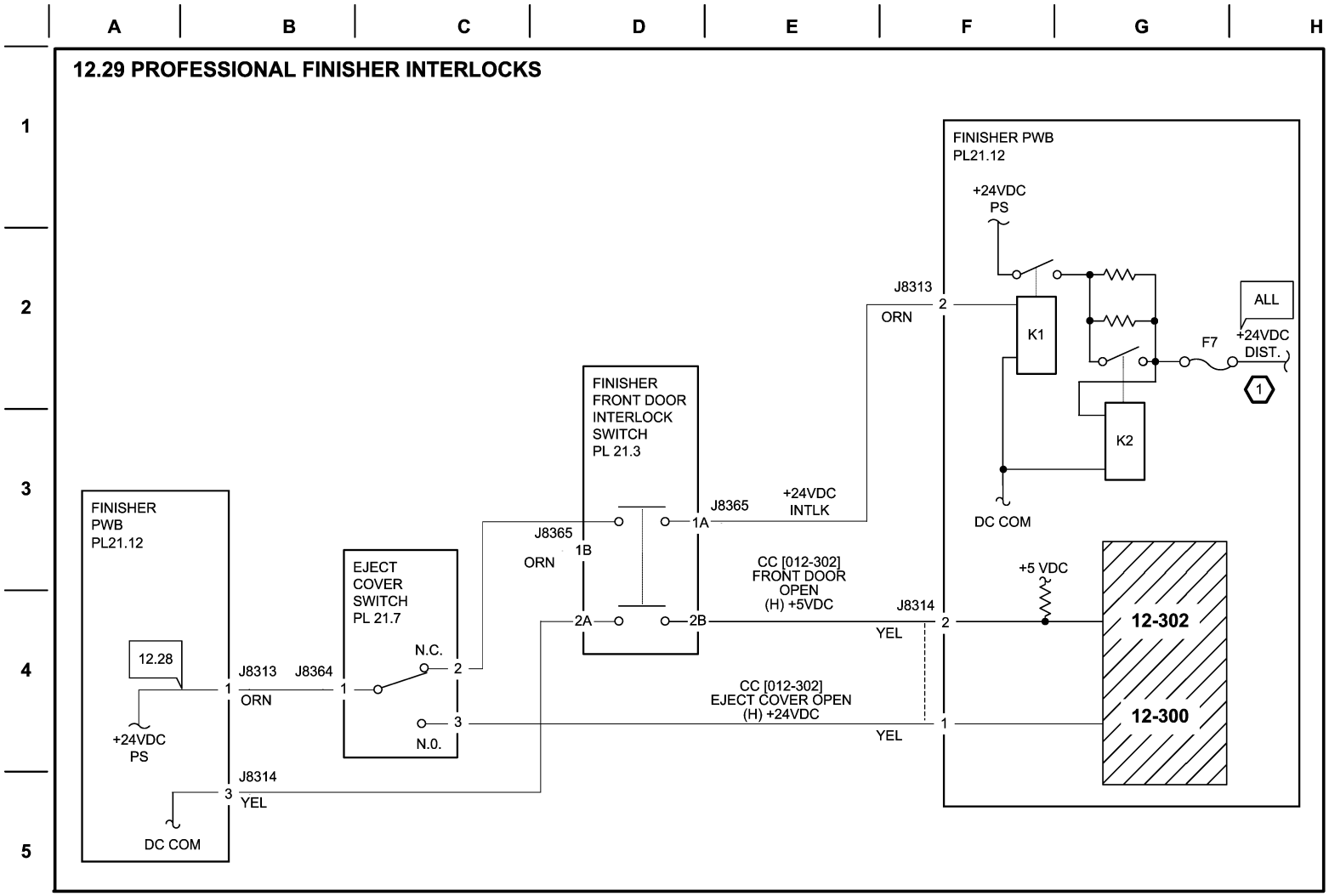

NOTES:

1. REFER TO WIRENETS FOR DC POWER DISTRIBUTION

T712729-OAK

Figure 29 BSD 12/29 Professional Finisher Interlocks

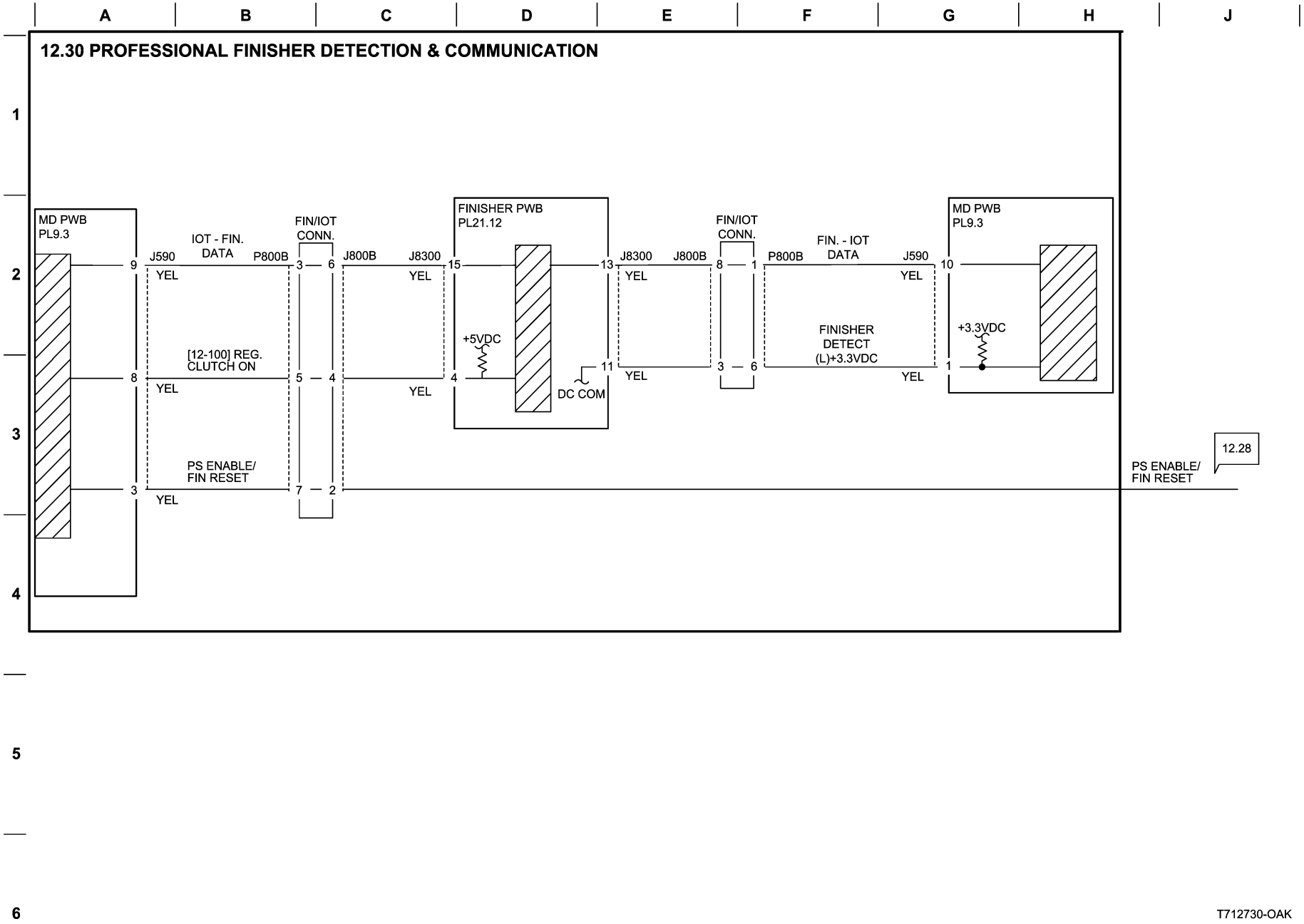

Figure 30 BSD 12.30 Professional Finisher Detection and Communication

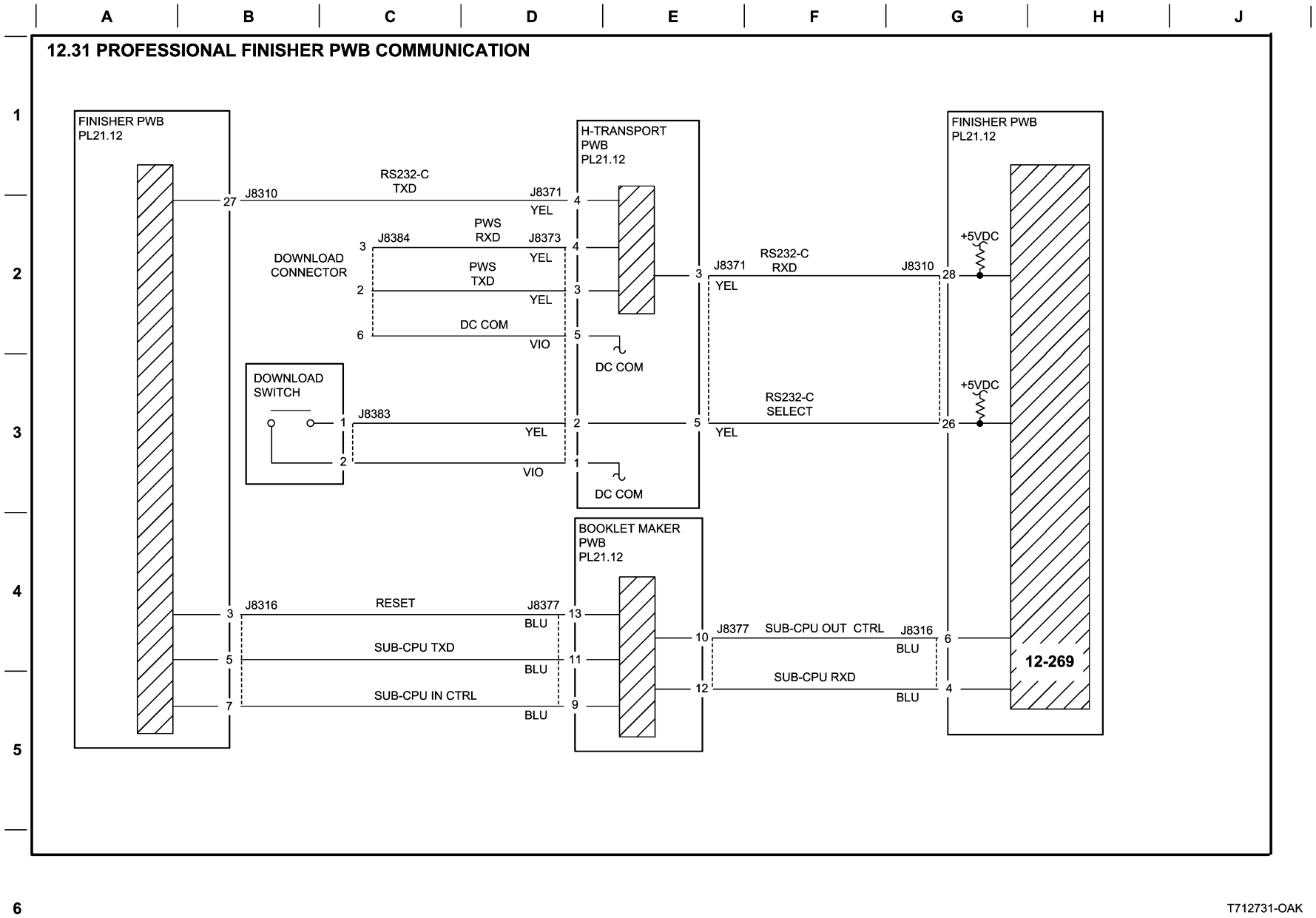

Figure 31 BSD 12.31 Professional Finisher PWB Communication

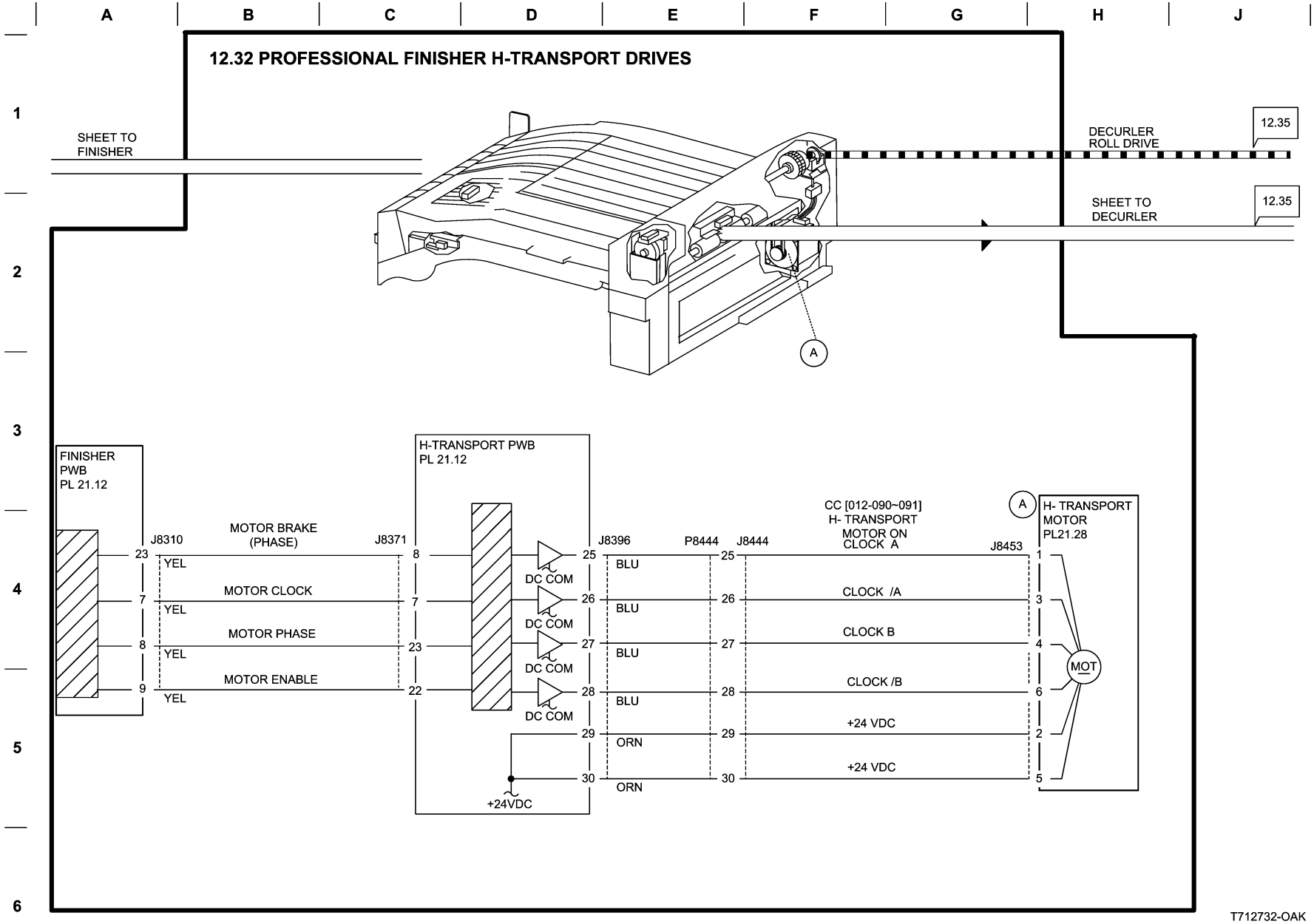

Figure 32 BSD 12.32 H-Transport Drives

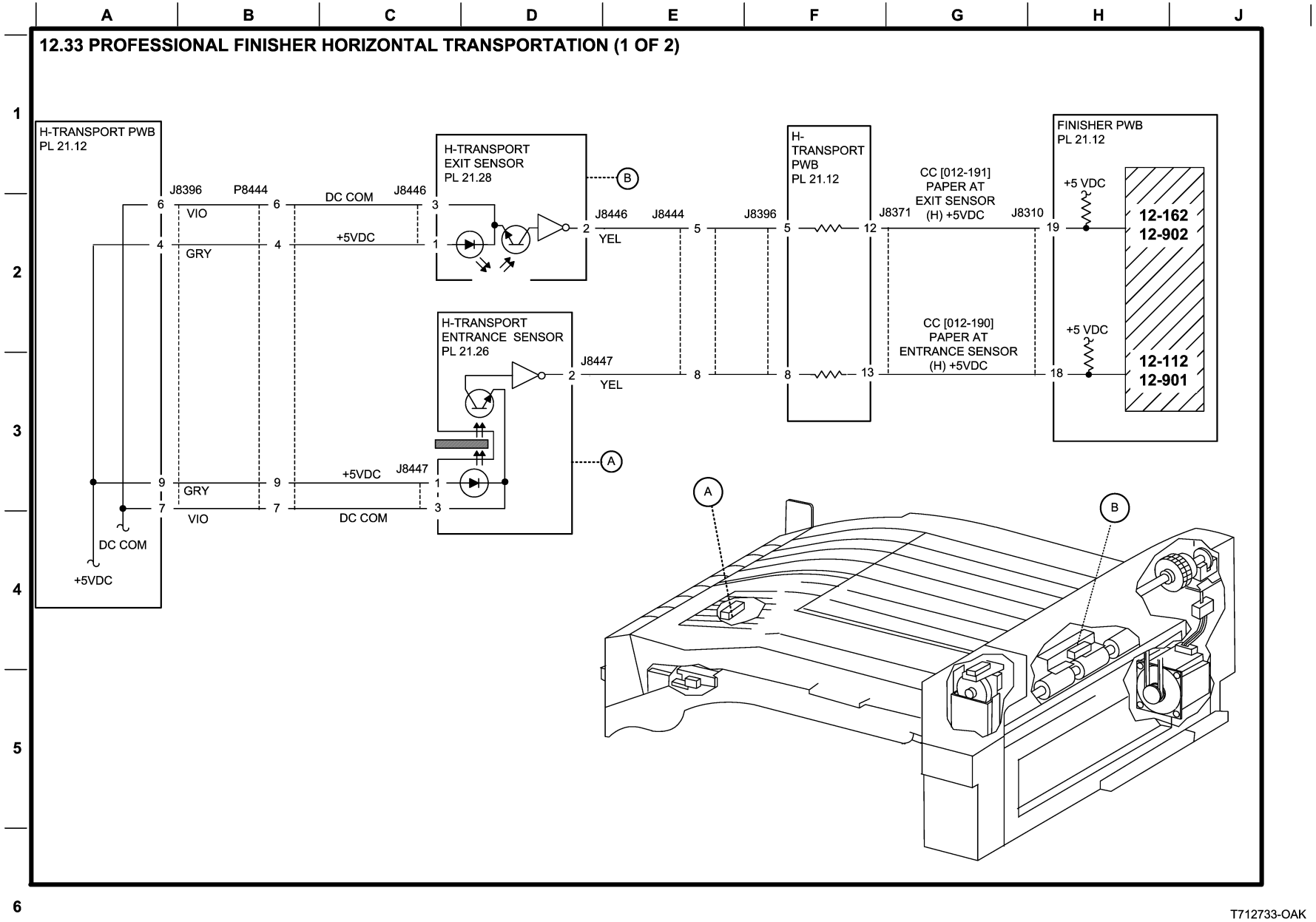

Figure 33 BSD 12.33 Horizontal Transportation (1 of 2)

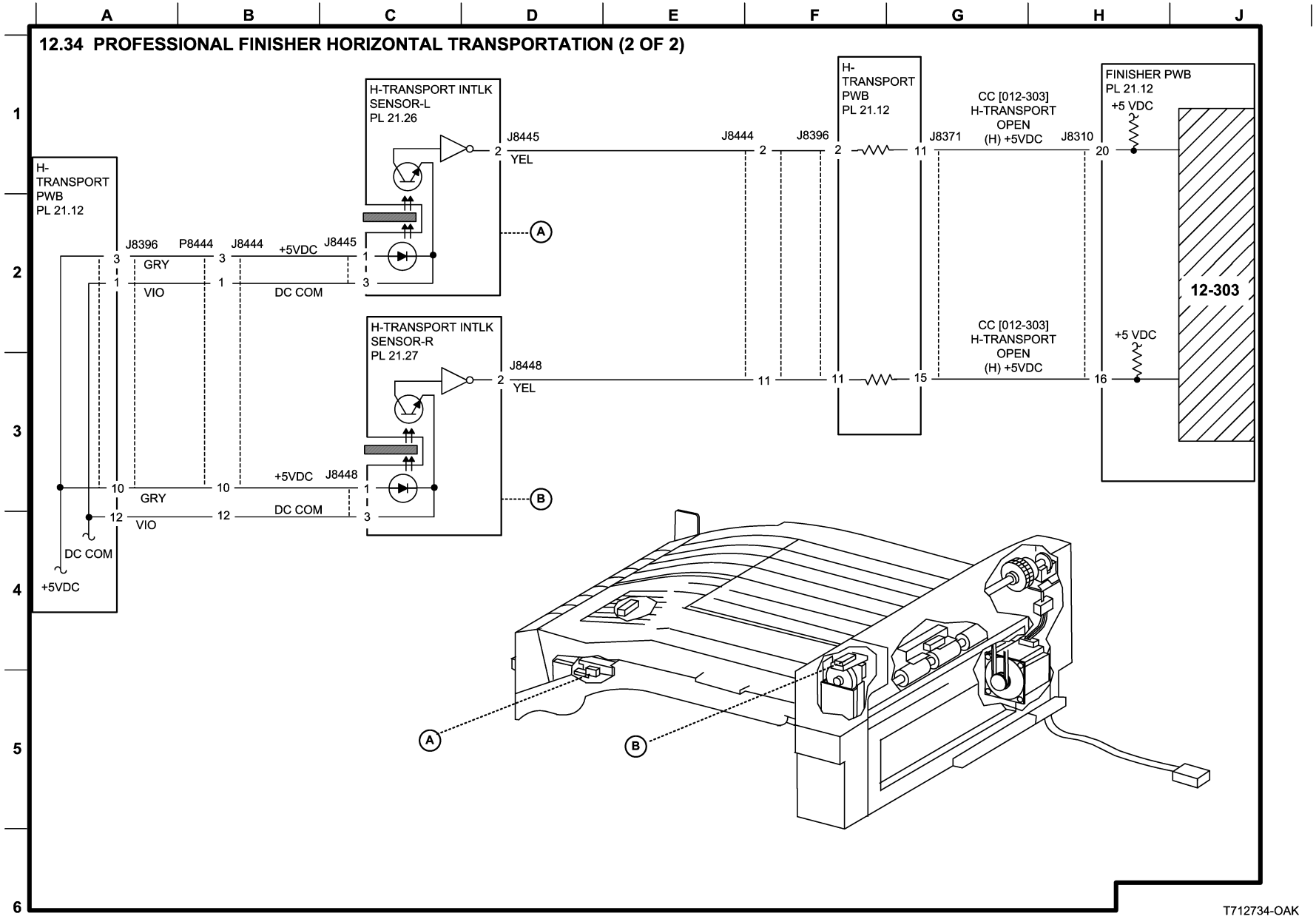

Figure 34 BSD 12.34 Horizontal Transportation (2 of 2)

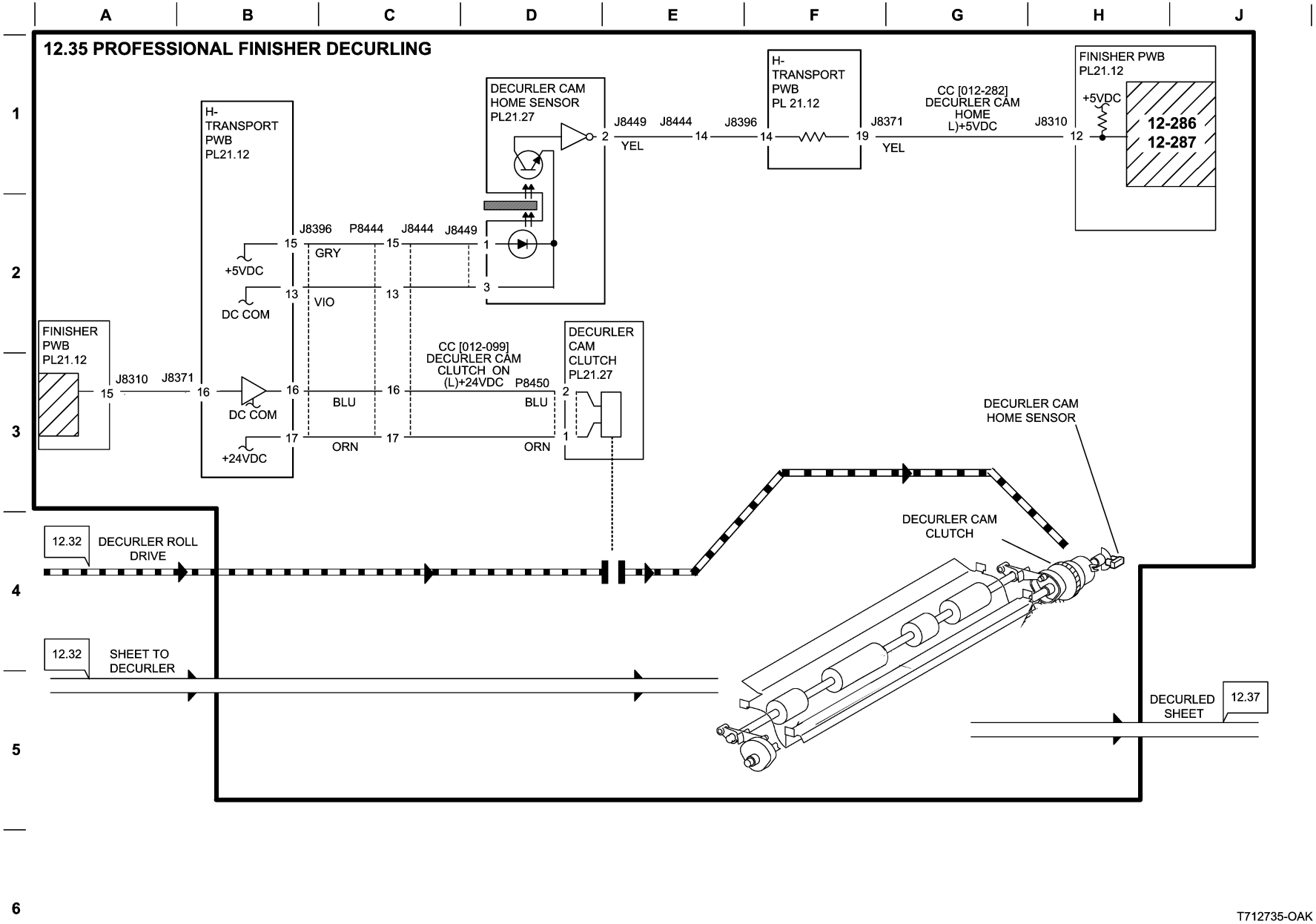

Figure 35 BSD 12.35 Professional Finisher Decurling

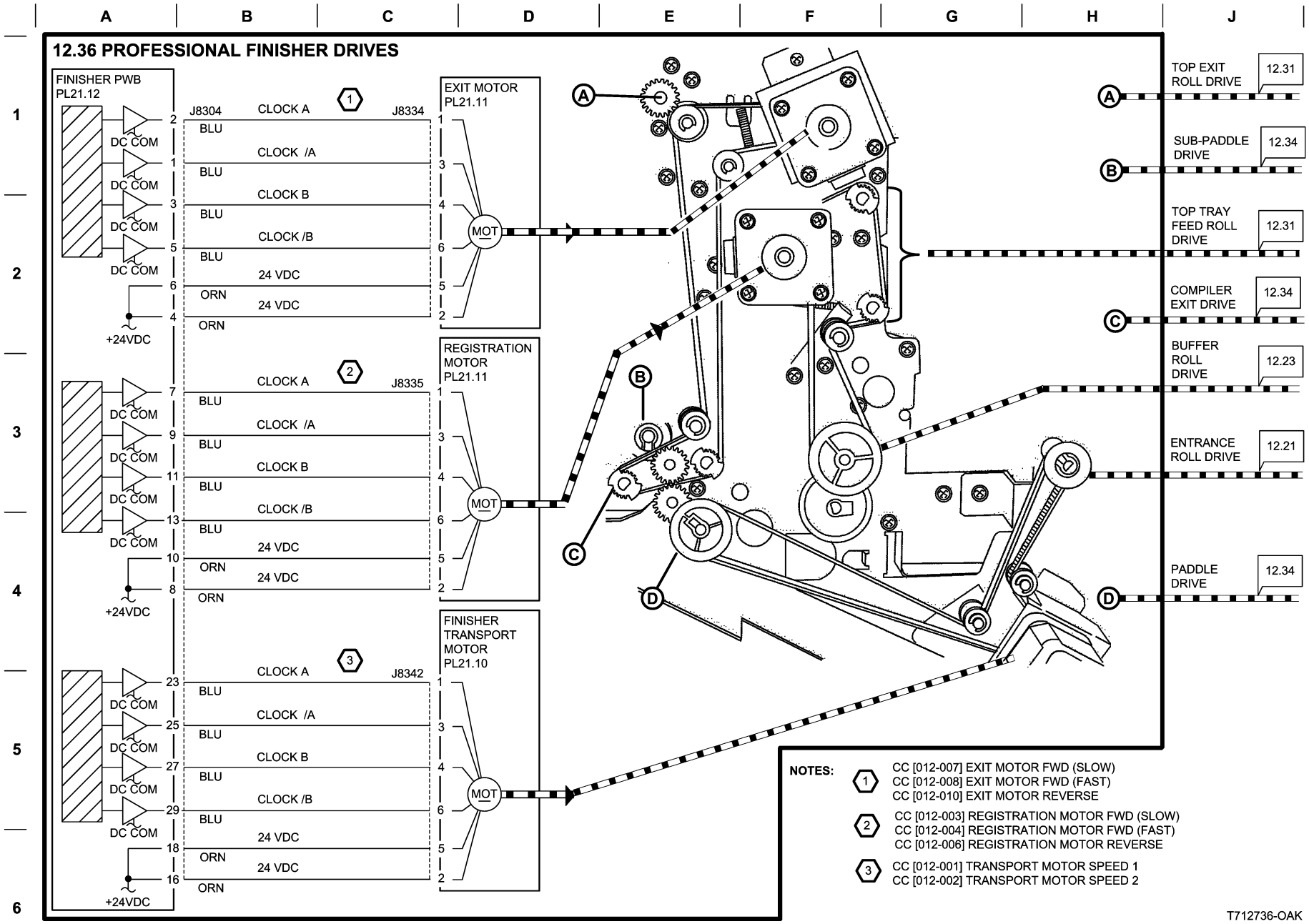

Figure 36 BSD 12.36 Professional Finisher Drives

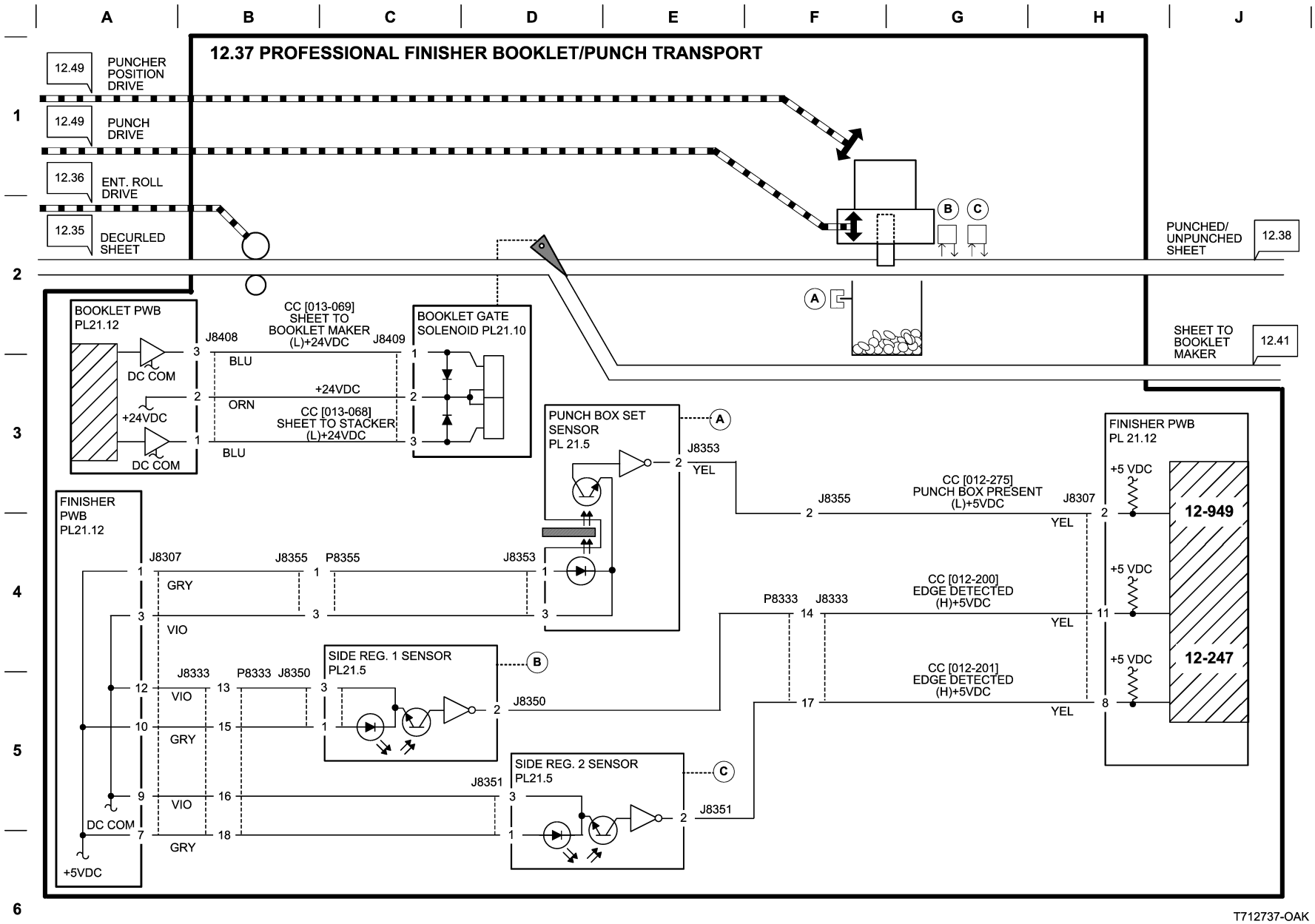

T712737-OAK

Figure 37 BSD 12.37 Professional Finisher Booklet/Punch Transport

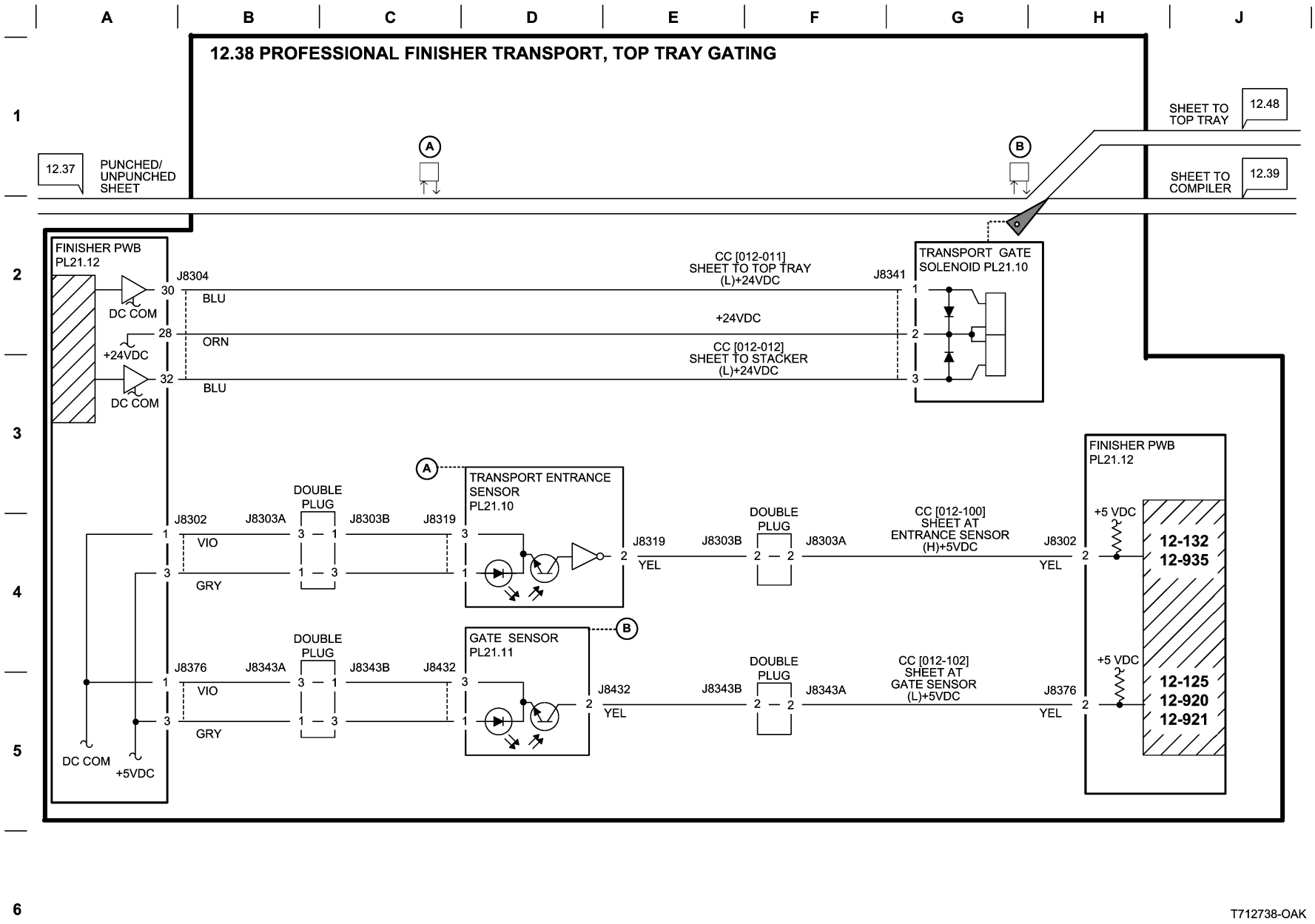

Figure 38 BSD 12.38 Professional Finisher Transport Top Tray Gating

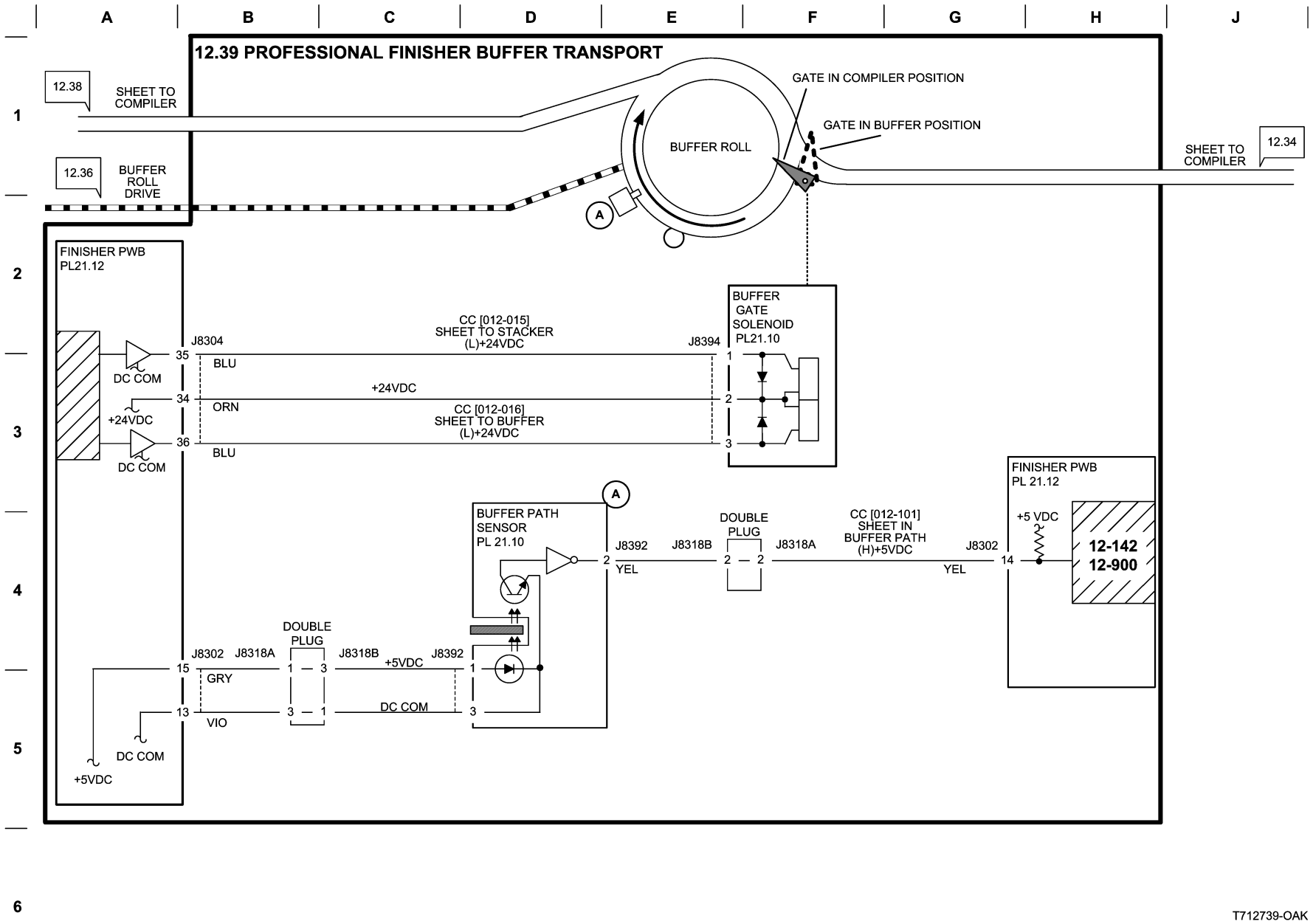

Figure 39 BSD 12.39 Professional Finisher Buffer Transport

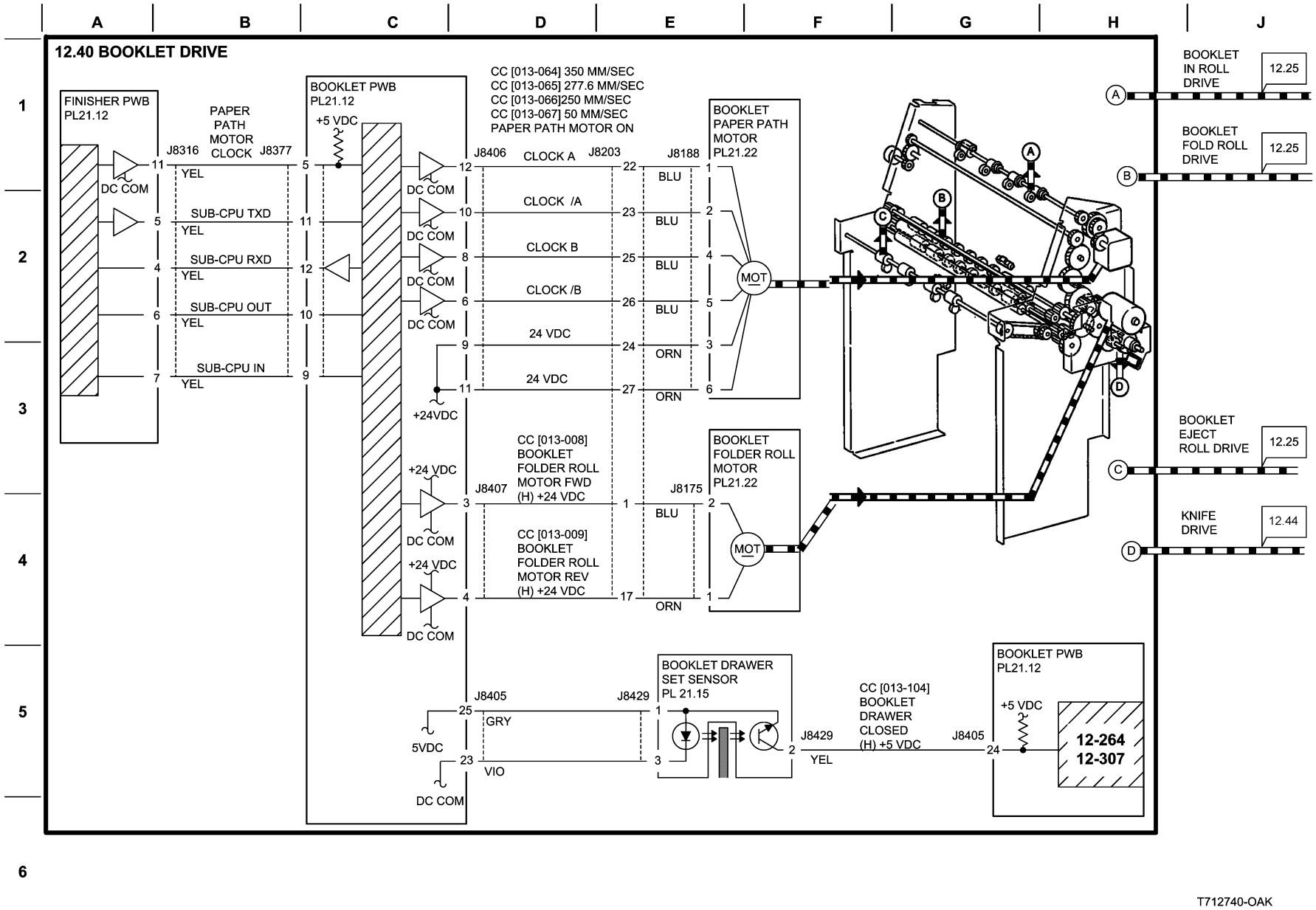

Figure 40 BSD 12.40 Booklet Drive

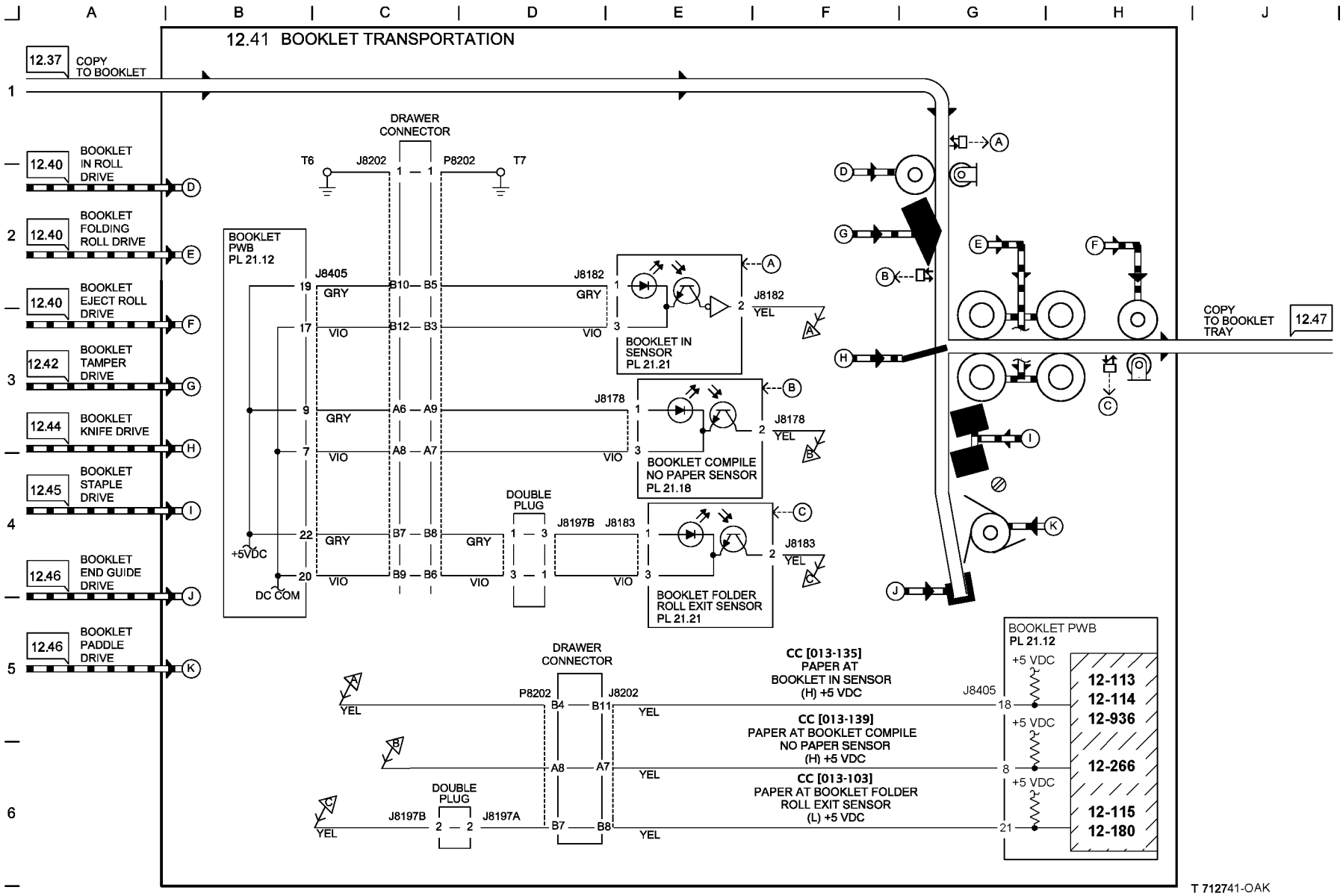

Figure 41 BSD 12.41 Booklet Transportation

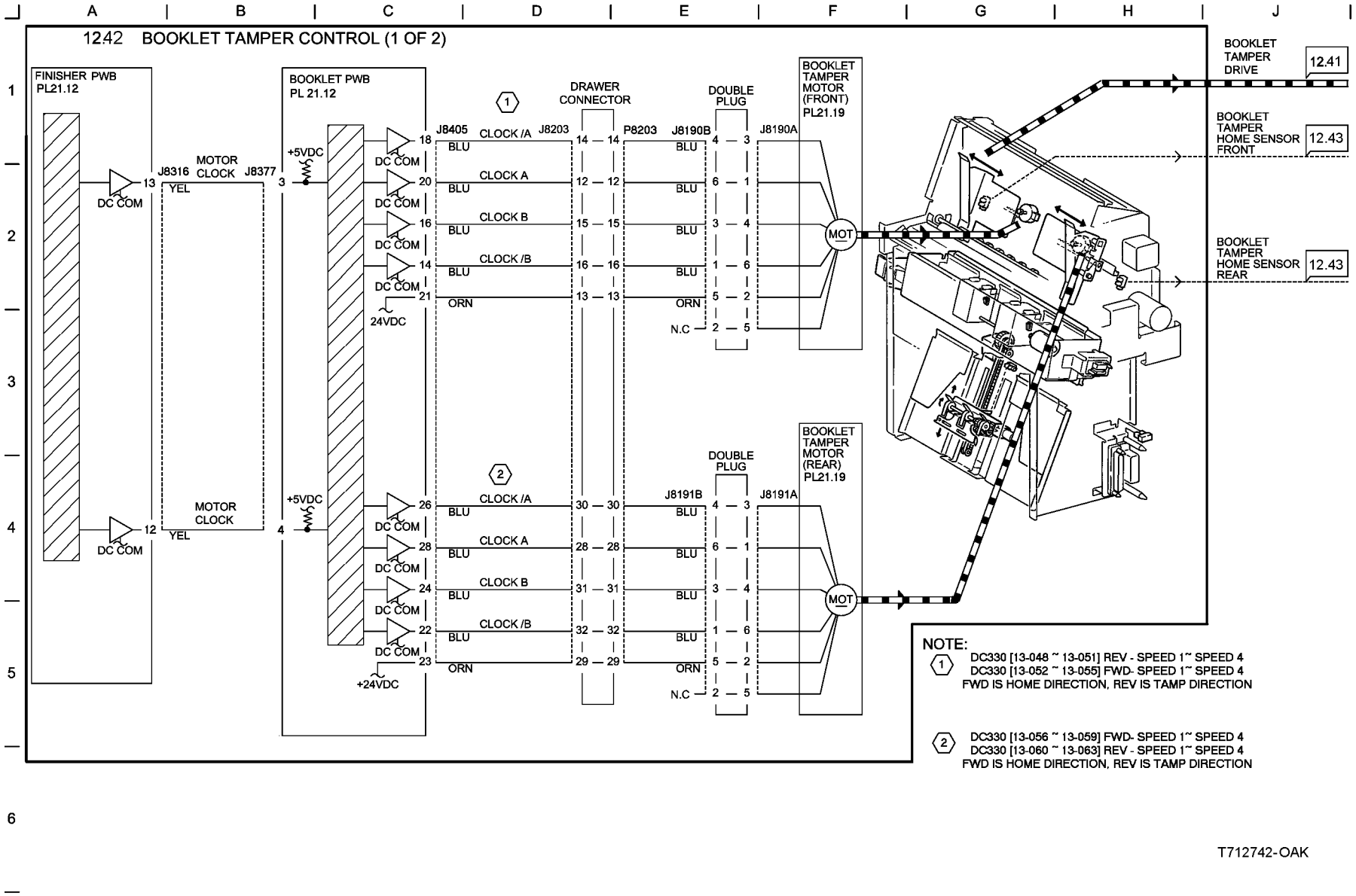

Figure 42 BSD 12.42 Booklet Tamper Control (1 of 2)

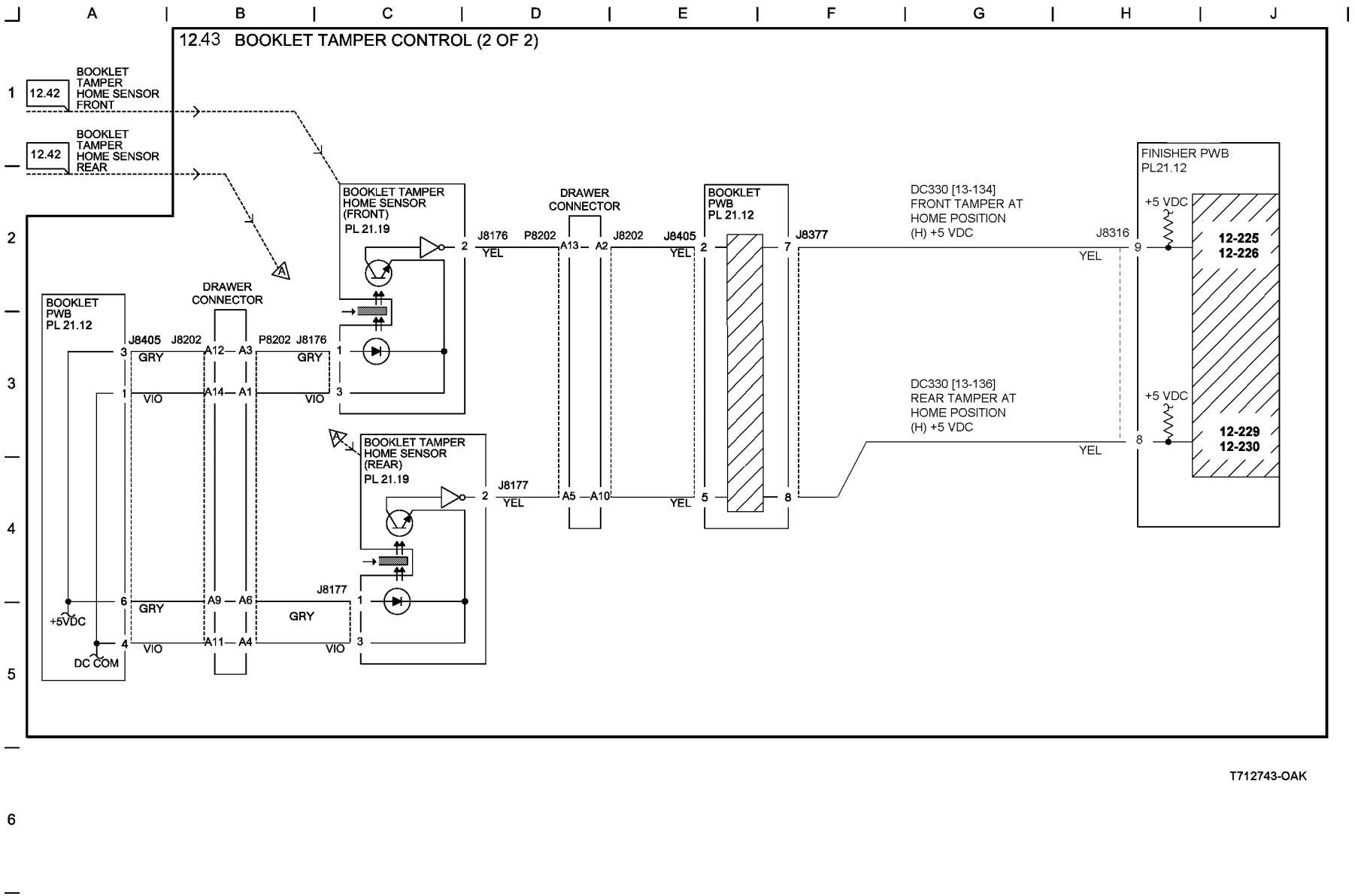

Figure 43 BSD 12.43 Booklet Tamper Control (2 of 2)

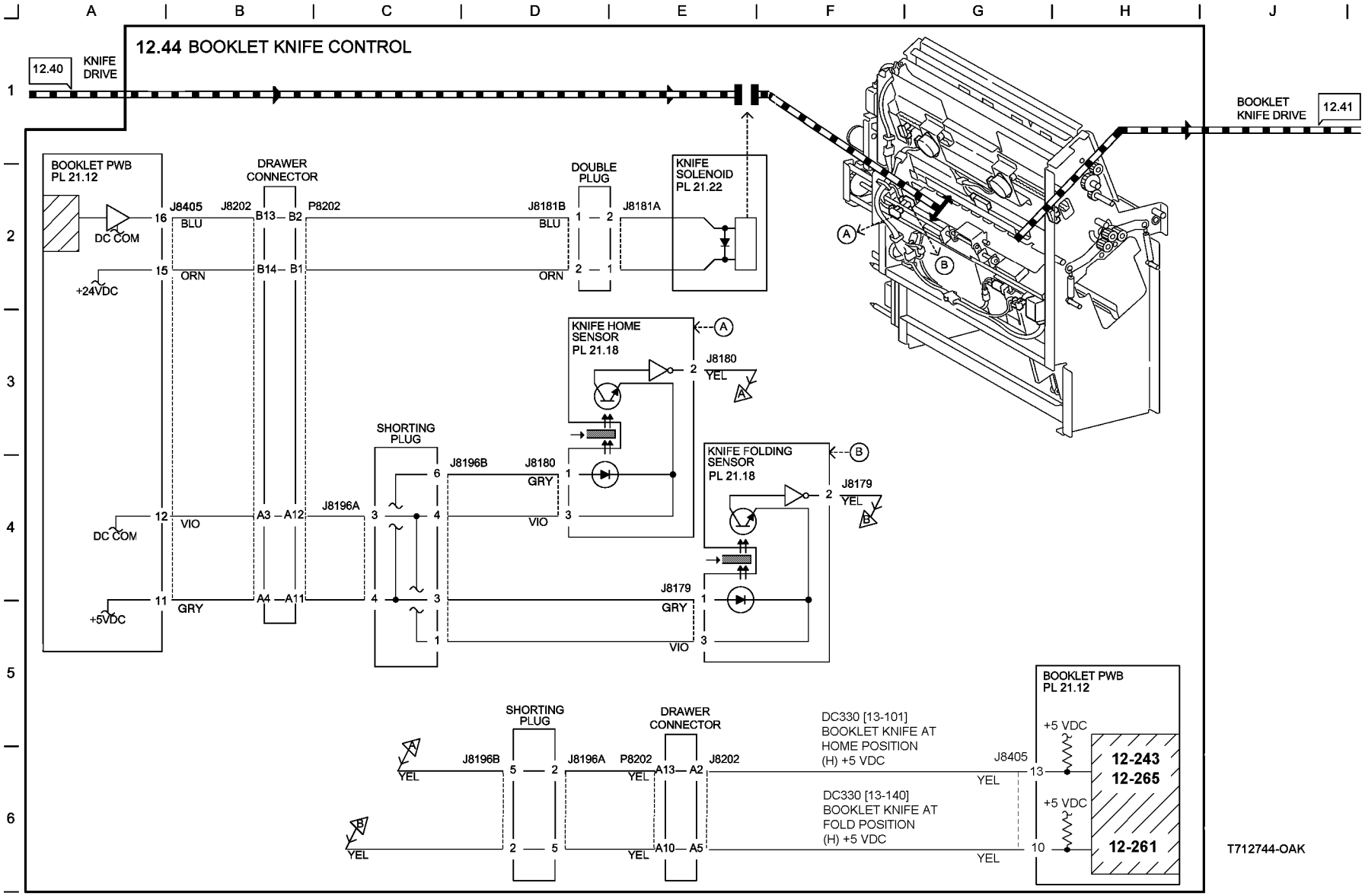

Figure 44 BSD 12.44 booklet Knife Control

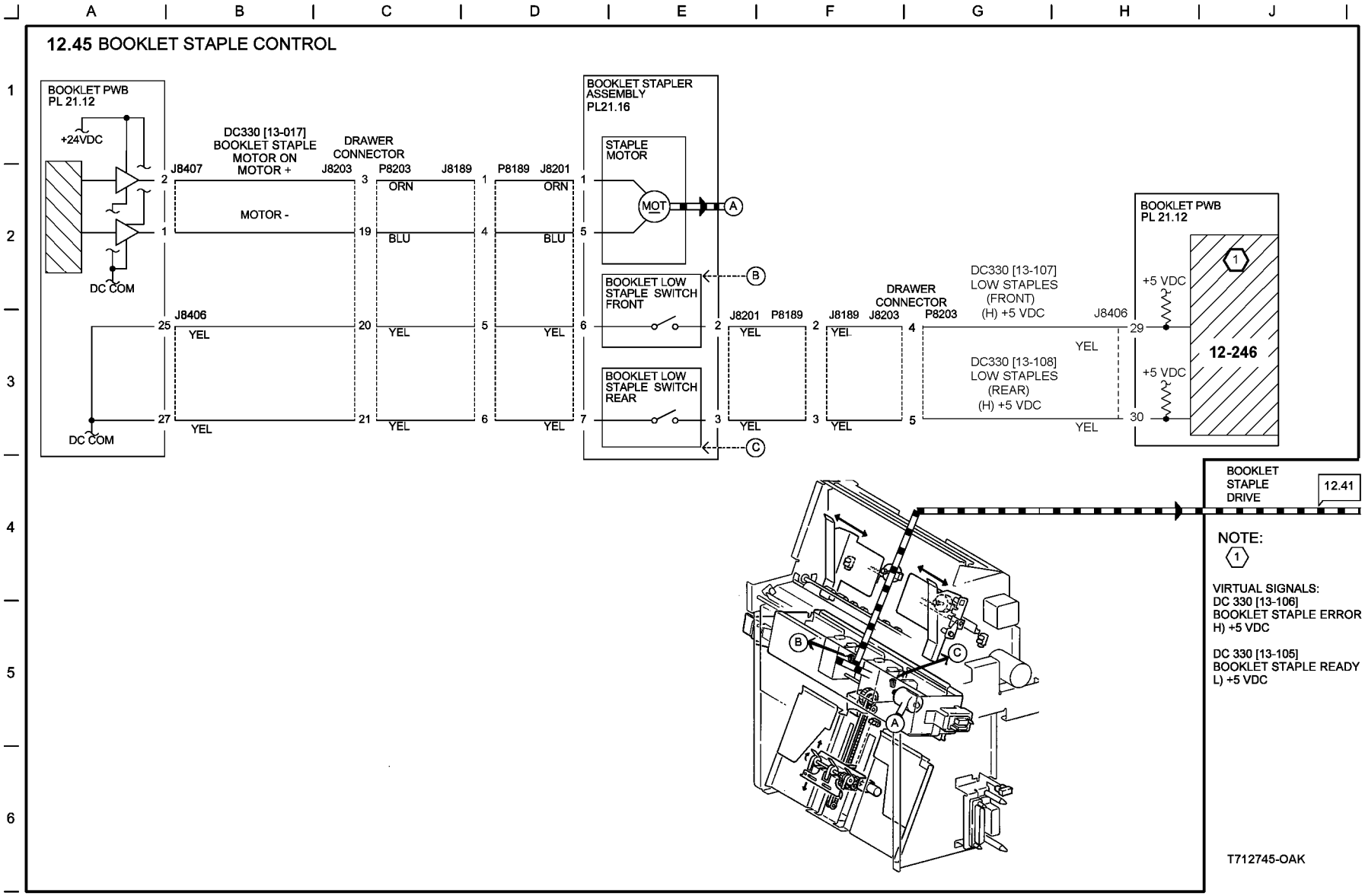

Figure 45 BSD 12.45 Booklet Staple Control

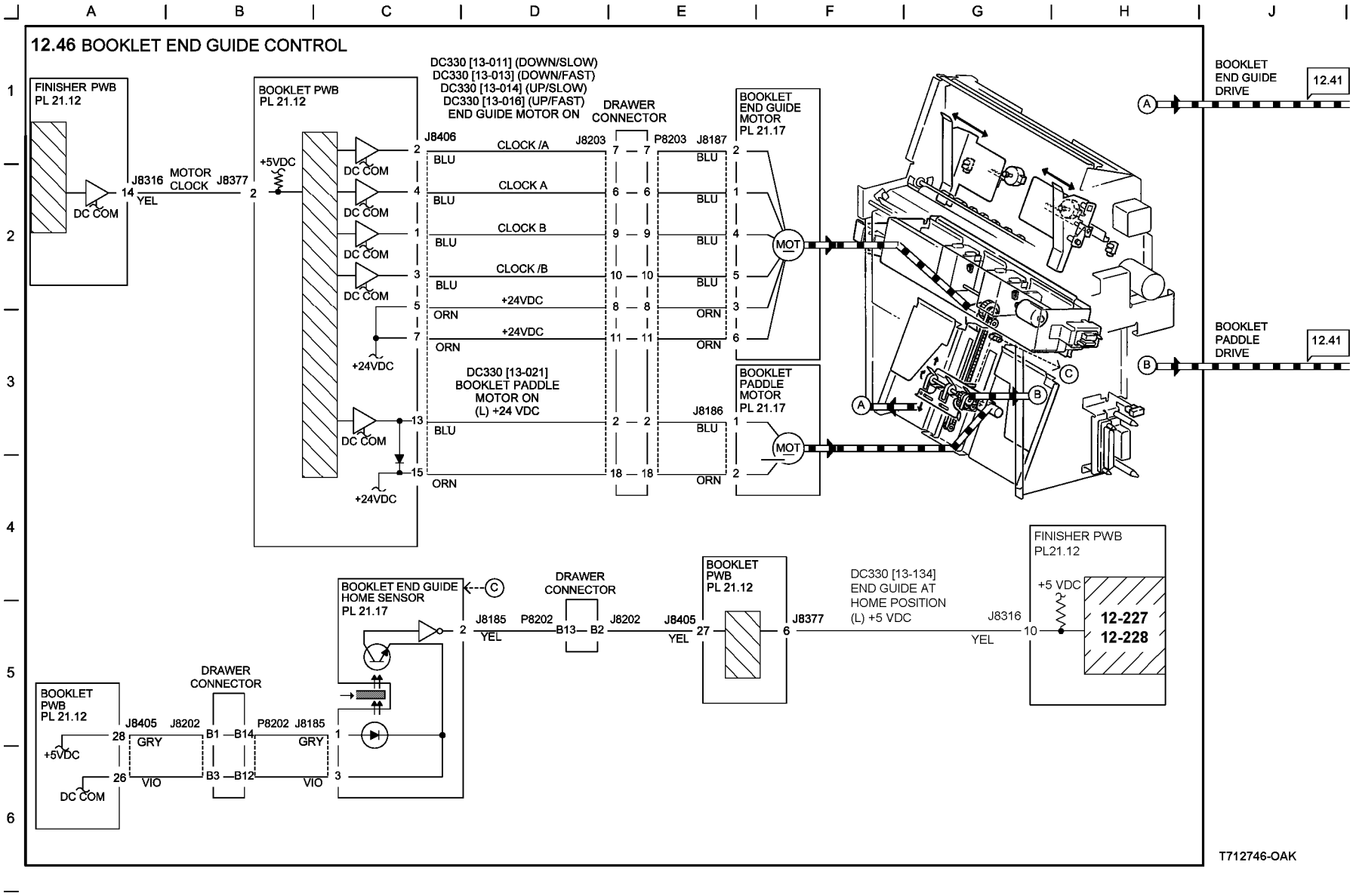

Figure 46 BSD 12.46 Booklet End Guide Control

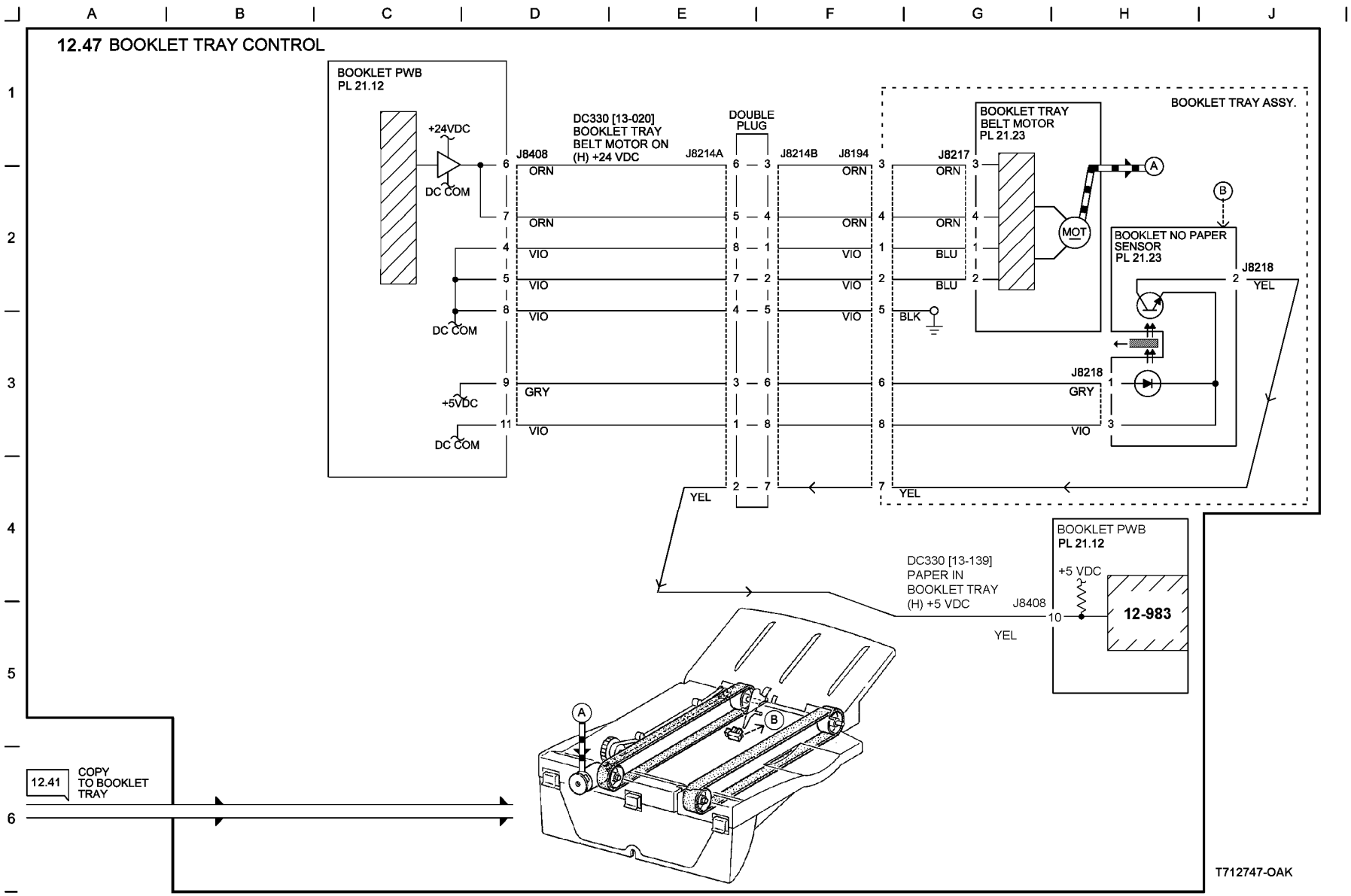

Figure 47 BSD 12.47 Booklet Tray Control

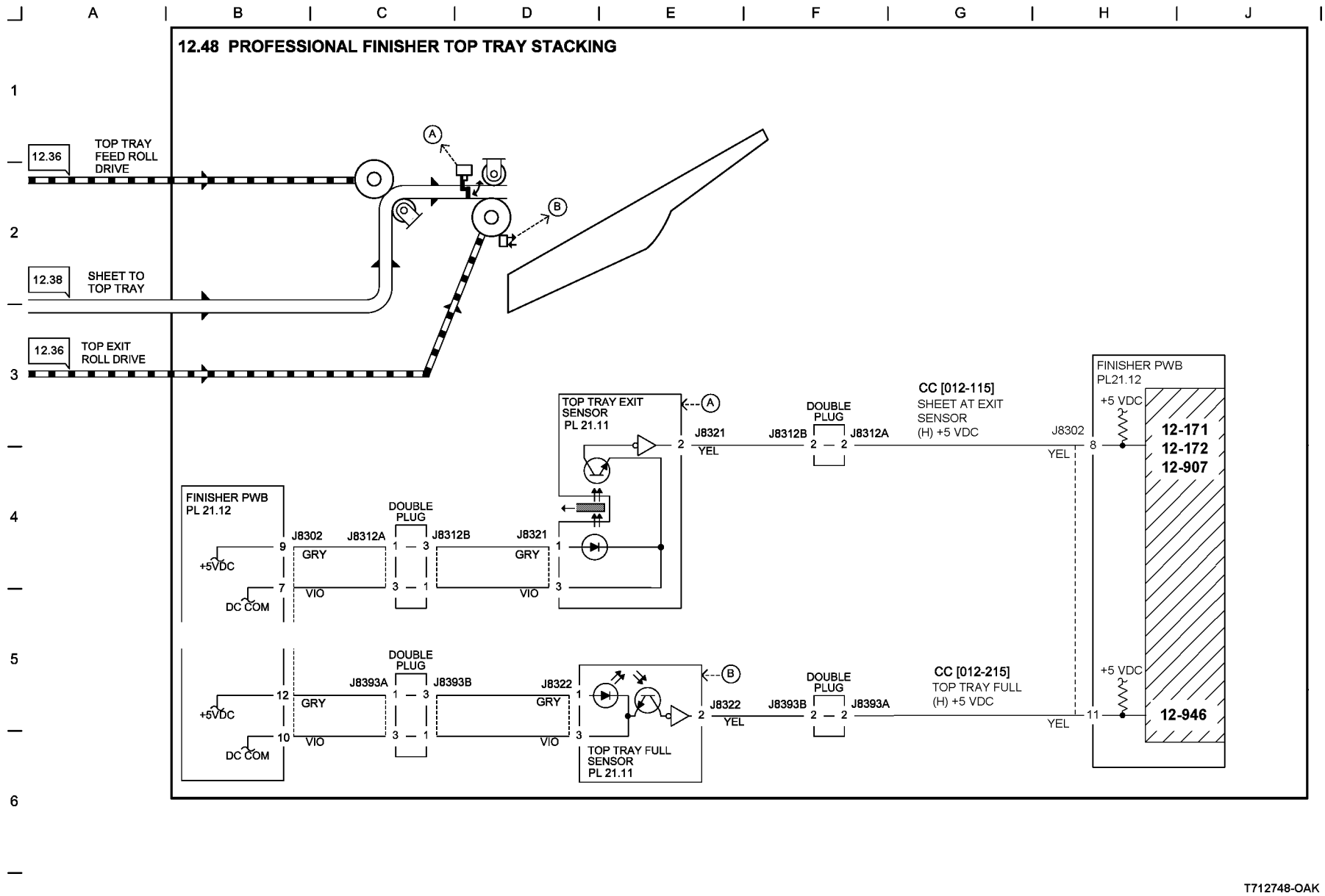

Figure 48 BSD 12.48 Professional Finisher Top Tray Stacking

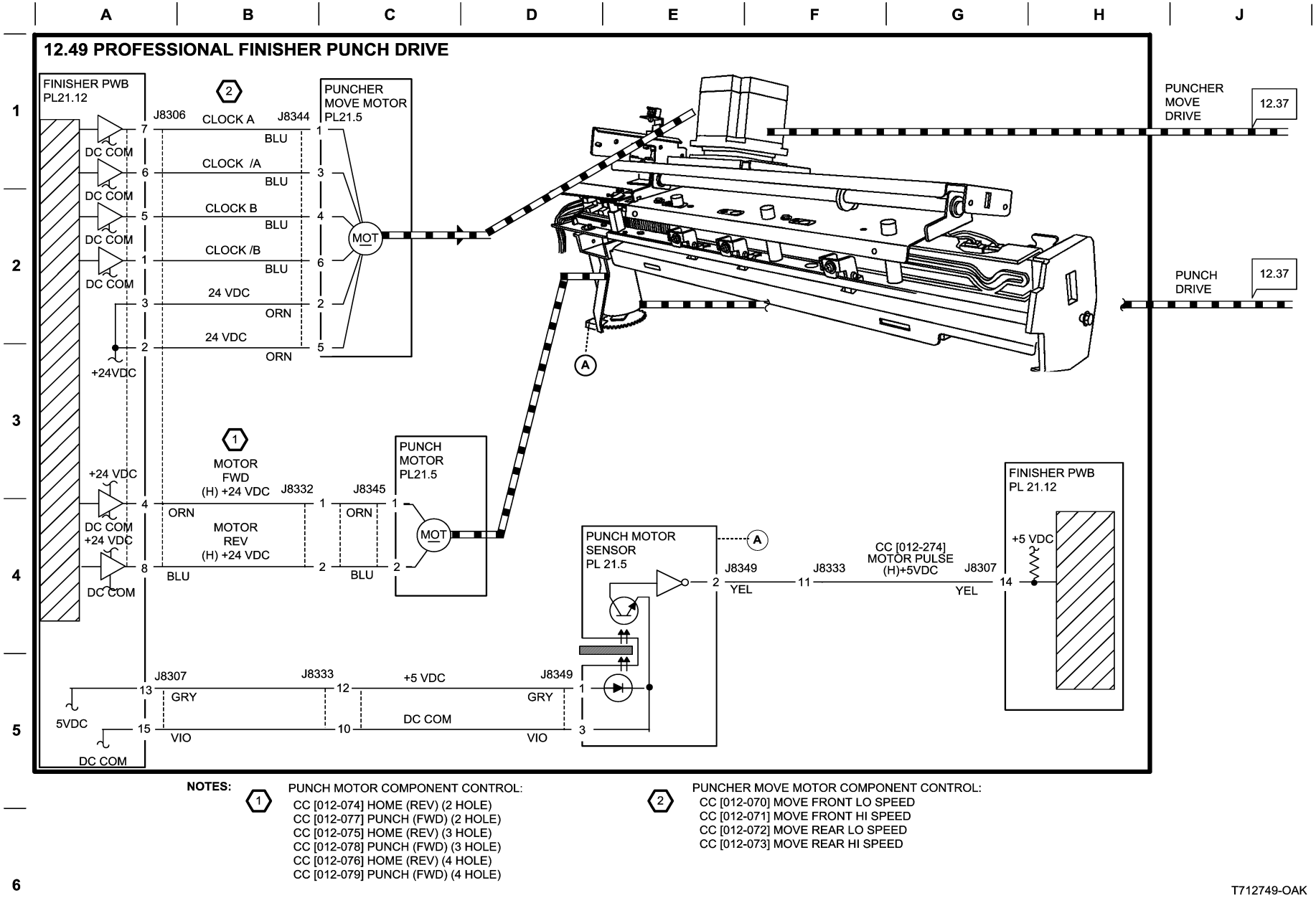

NOTES:

(1) PUNCH MOTOR COMPONENT CONTROL:
- CC [012-074] HOME (REV) (2 HOLE)
- CC [012-077] PUNCH (FWD) (2 HOLE)
- CC [012-075] HOME (REV) (3 HOLE)
- CC [012-078] PUNCH (FWD) (3 HOLE)
- CC [012-076] HOME (REV) (4 HOLE)
- CC [012-079] PUNCH (FWD) (4 HOLE)

(2) PUNCHER MOVE MOTOR COMPONENT CONTROL:
- CC [012-070] MOVE FRONT LO SPEED
- CC [012-071] MOVE FRONT HI SPEED
- CC [012-072] MOVE REAR LO SPEED
- CC [012-073] MOVE REAR HI SPEED

T712749-OAK

Figure 49 BSD 12.49 Professional Finisher Punch Drive

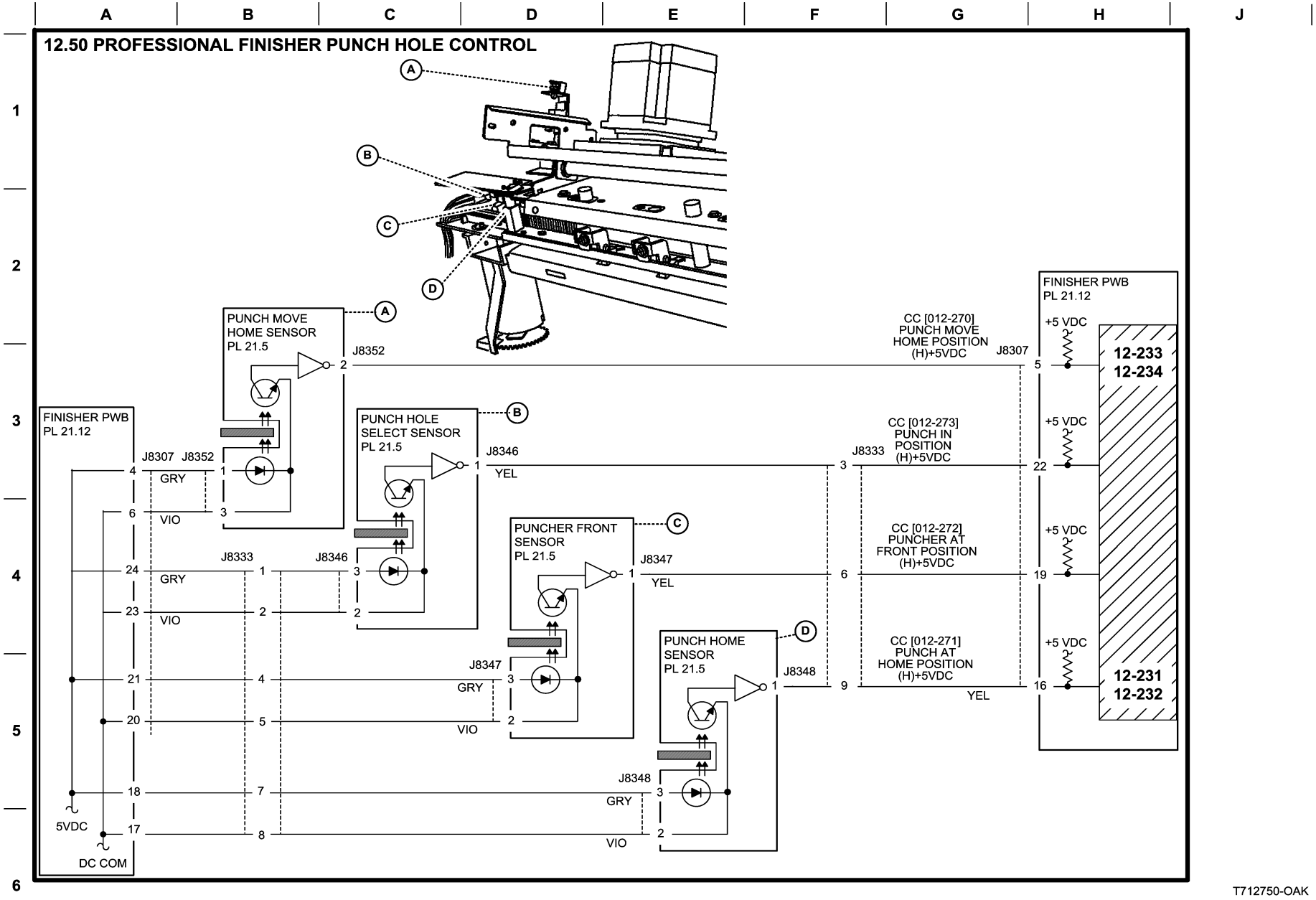

Figure 50 BSD 12.50 Professional Finisher Punch Hole Control

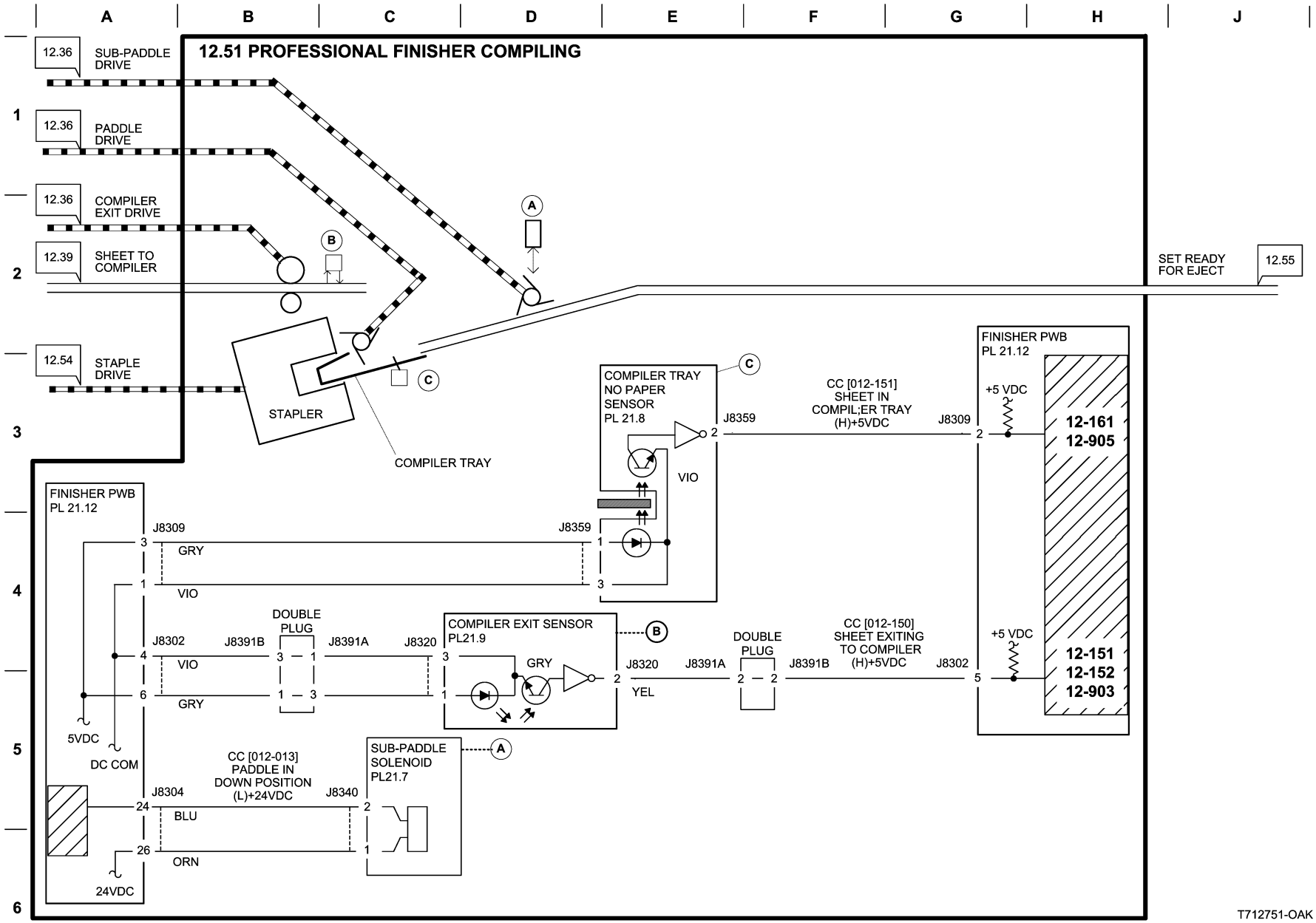

Figure 51 BSD 12.51 Professional Finisher Compiling

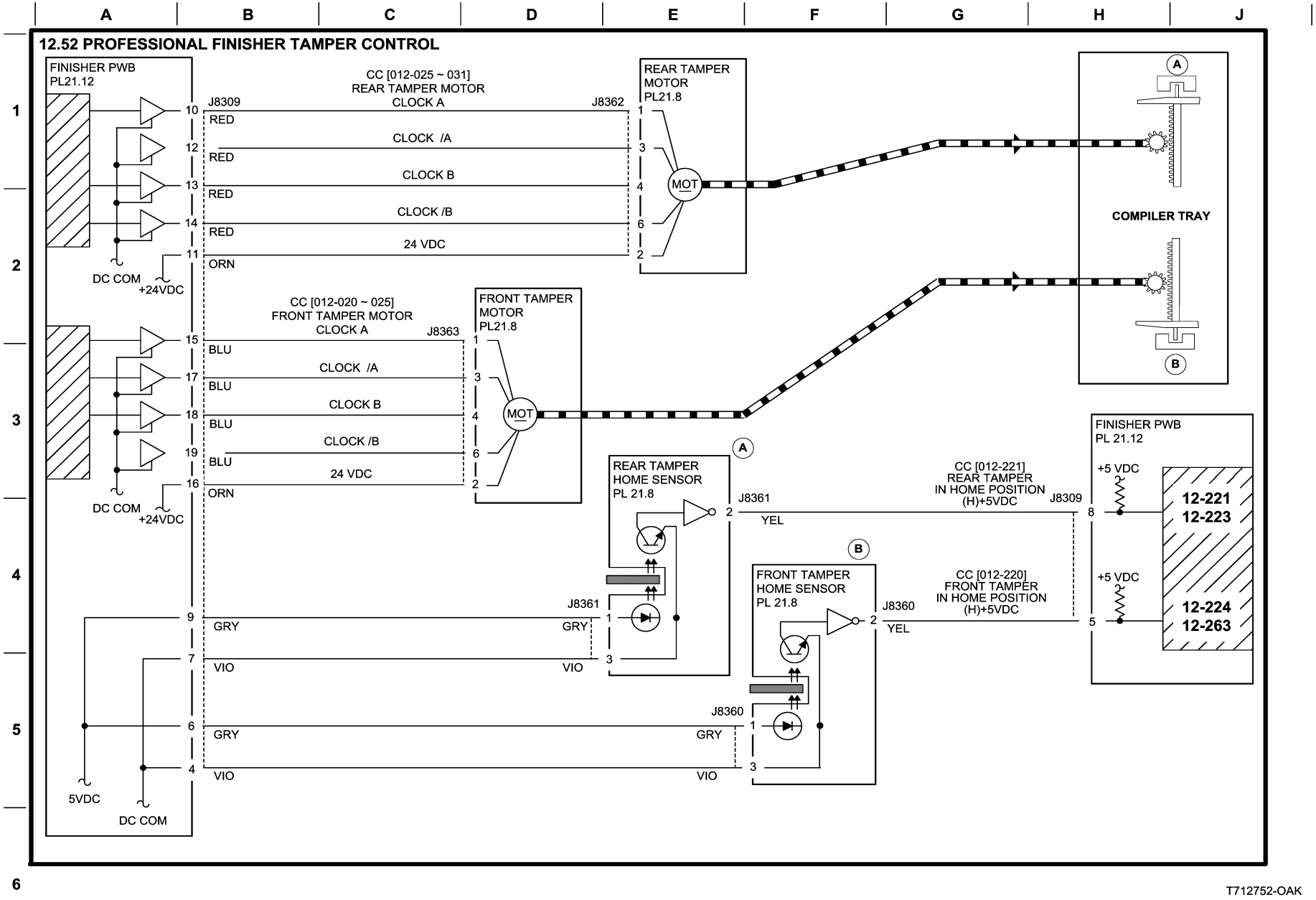

Figure 52 BSD 12.52 Professional Finisher Tamper Control

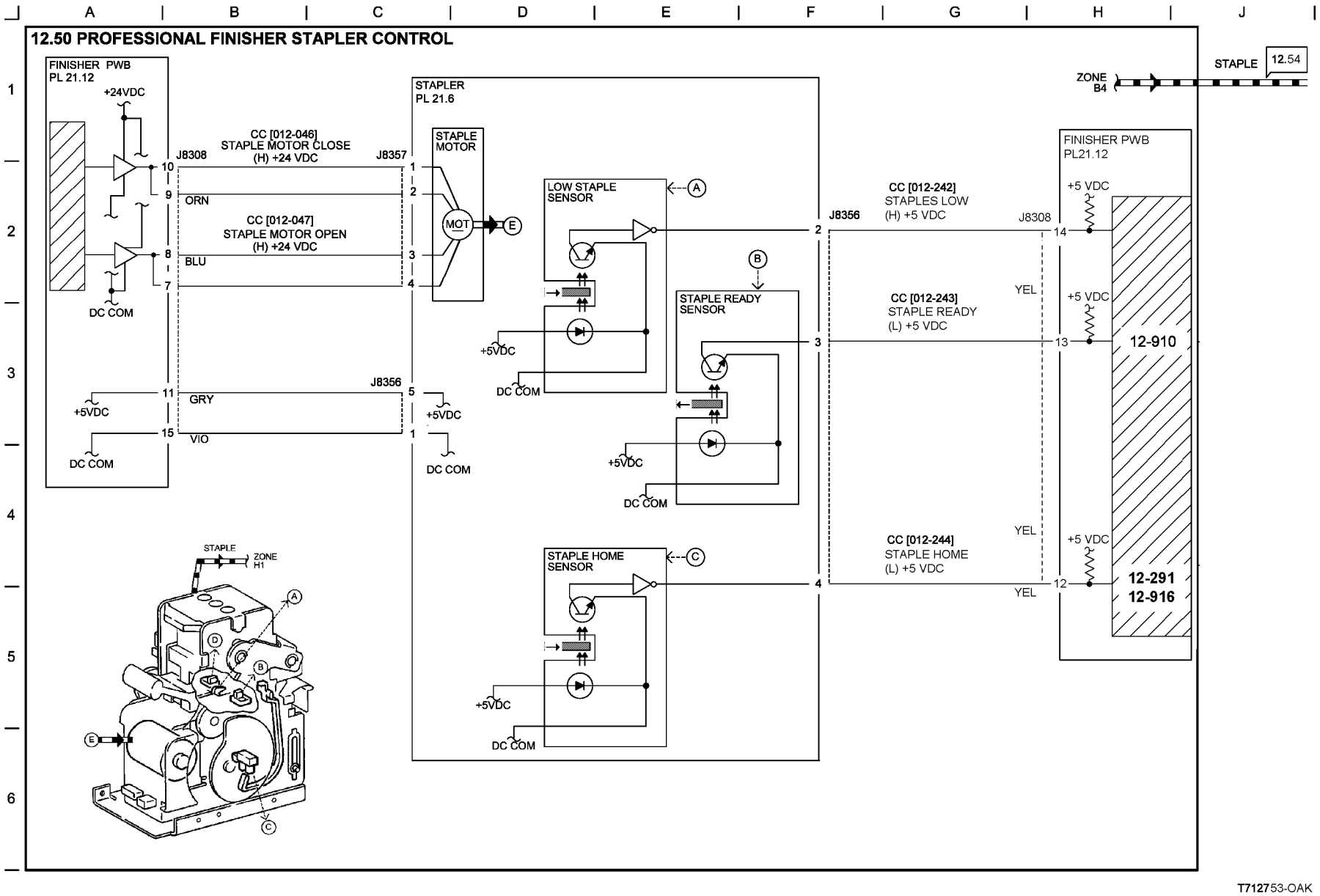

Figure 53 BSD 12.53 Professional Finisher Stapler Control

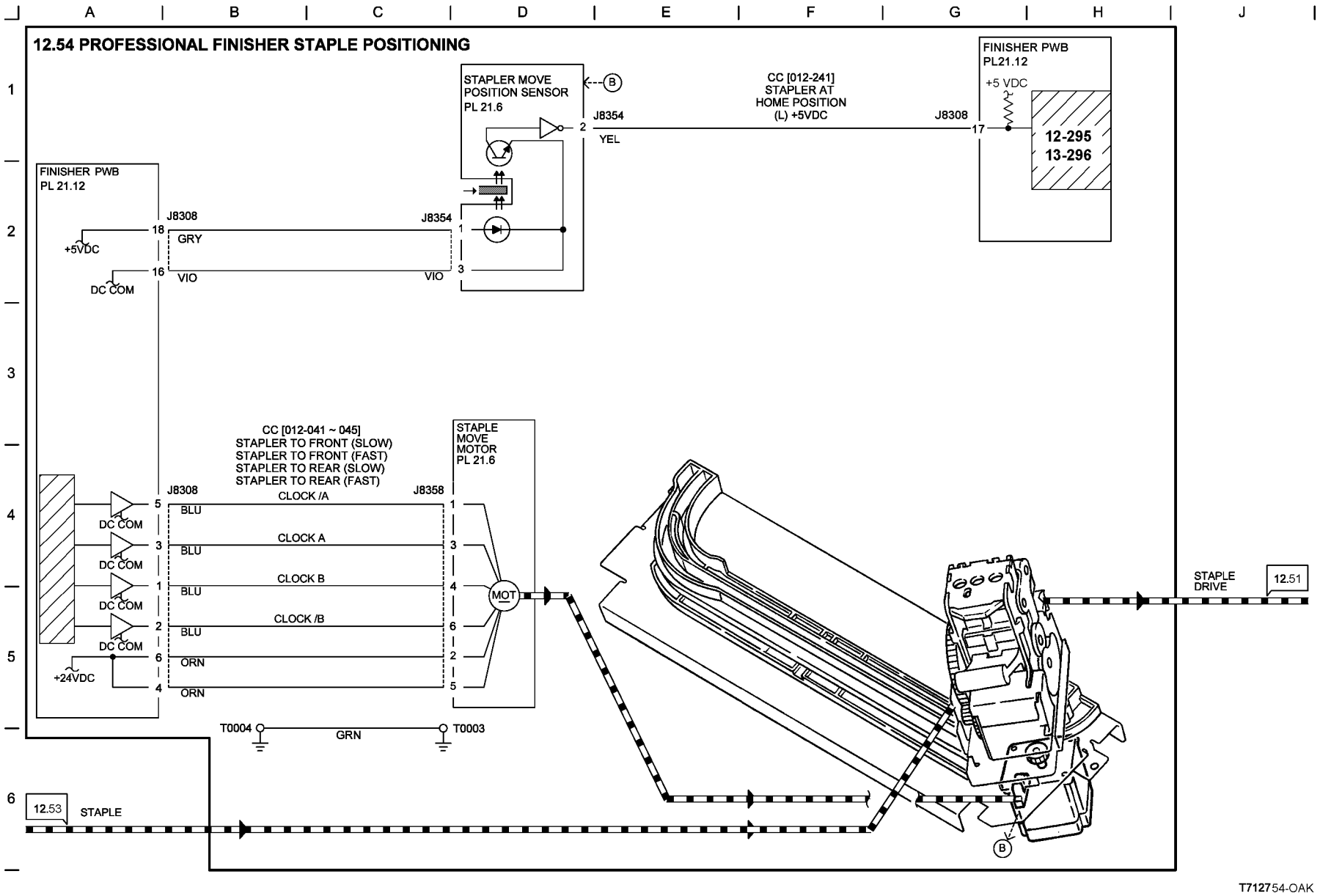

Figure 54 BSD 12.54 Professional Finisher Staple Positioning

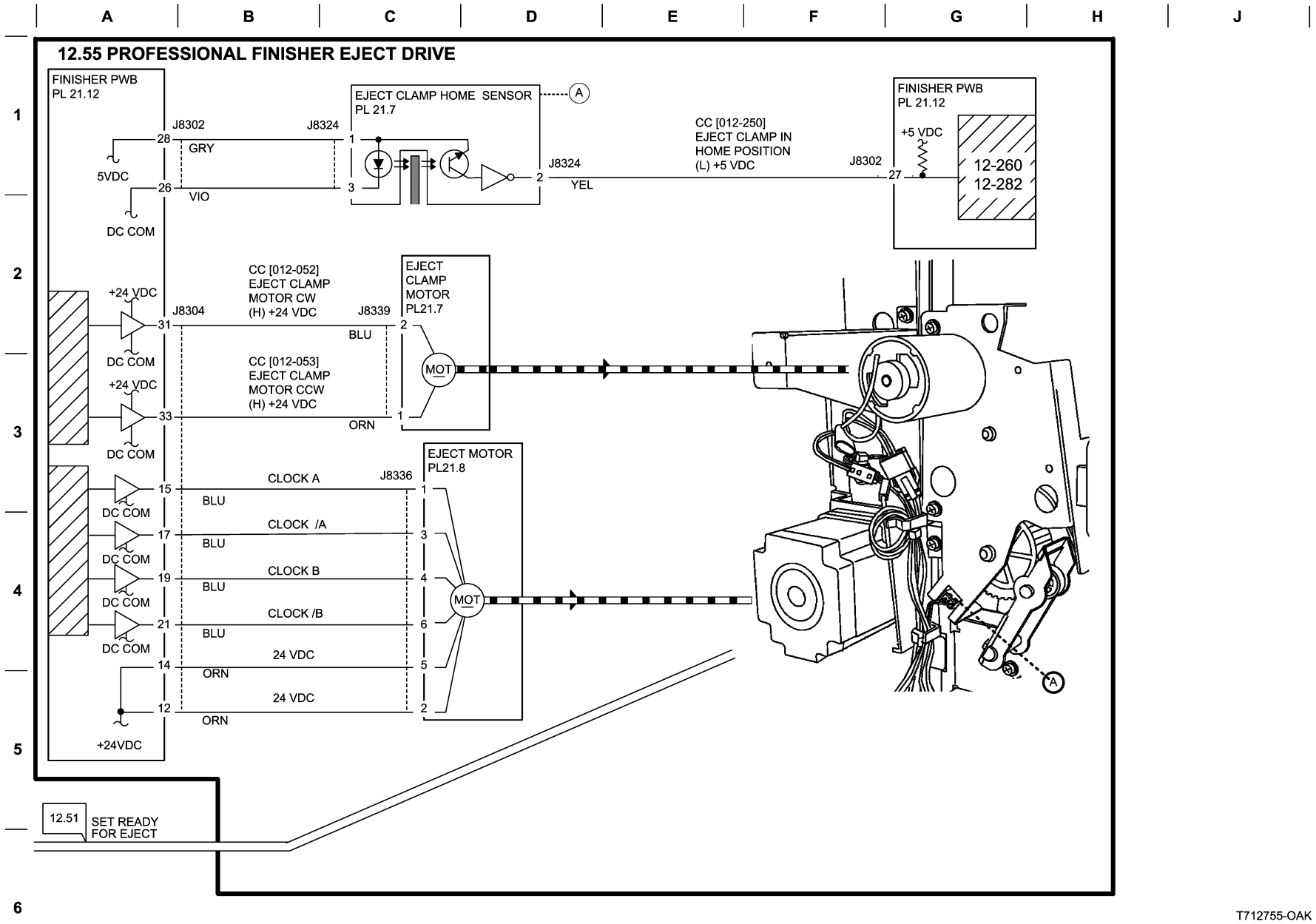

T712755-OAK

Figure 55 BSD 12.55 Professional Finisher Eject Drive

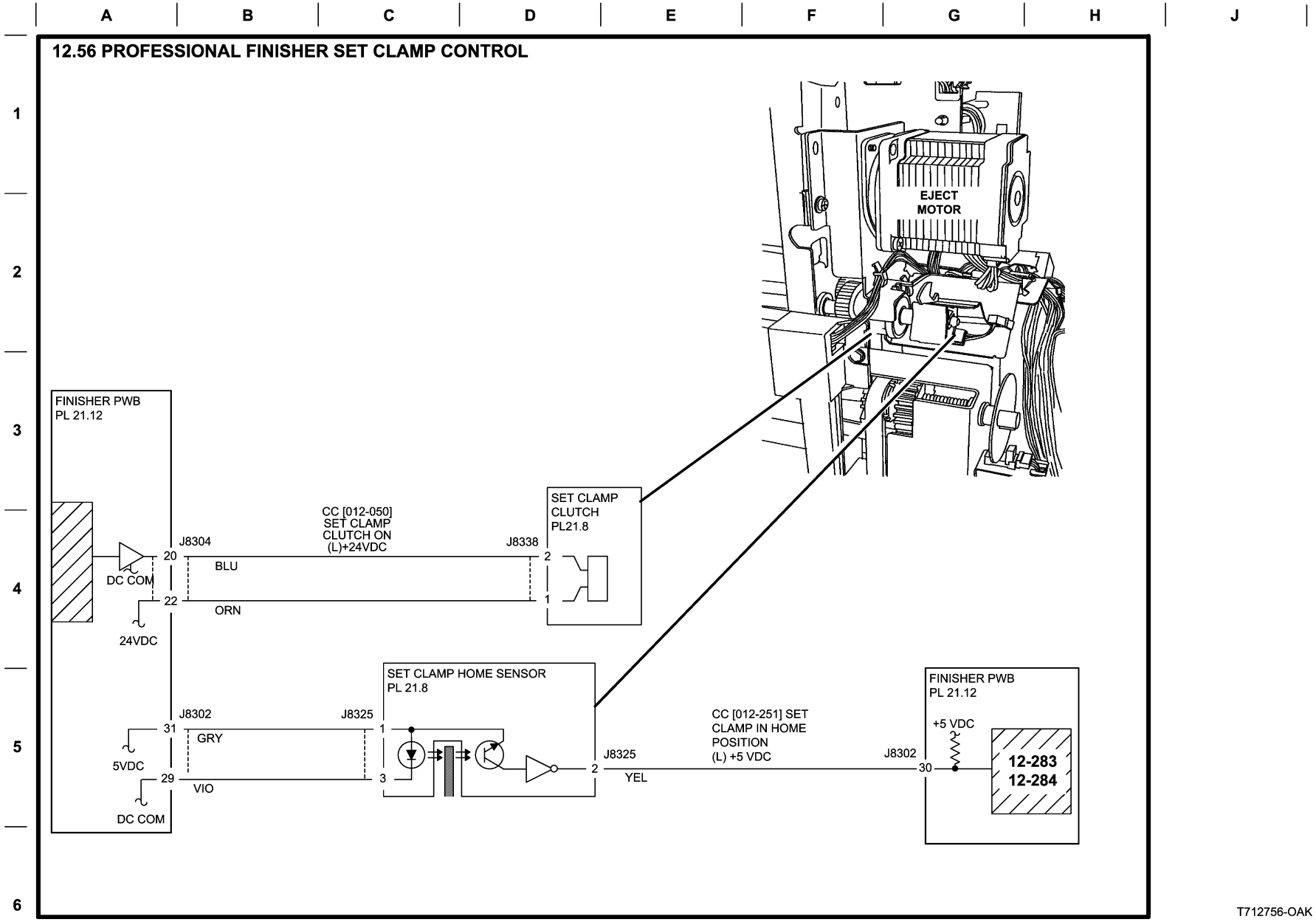

Figure 56 BSD 12.56 Professional Finisher Set Clamp Control

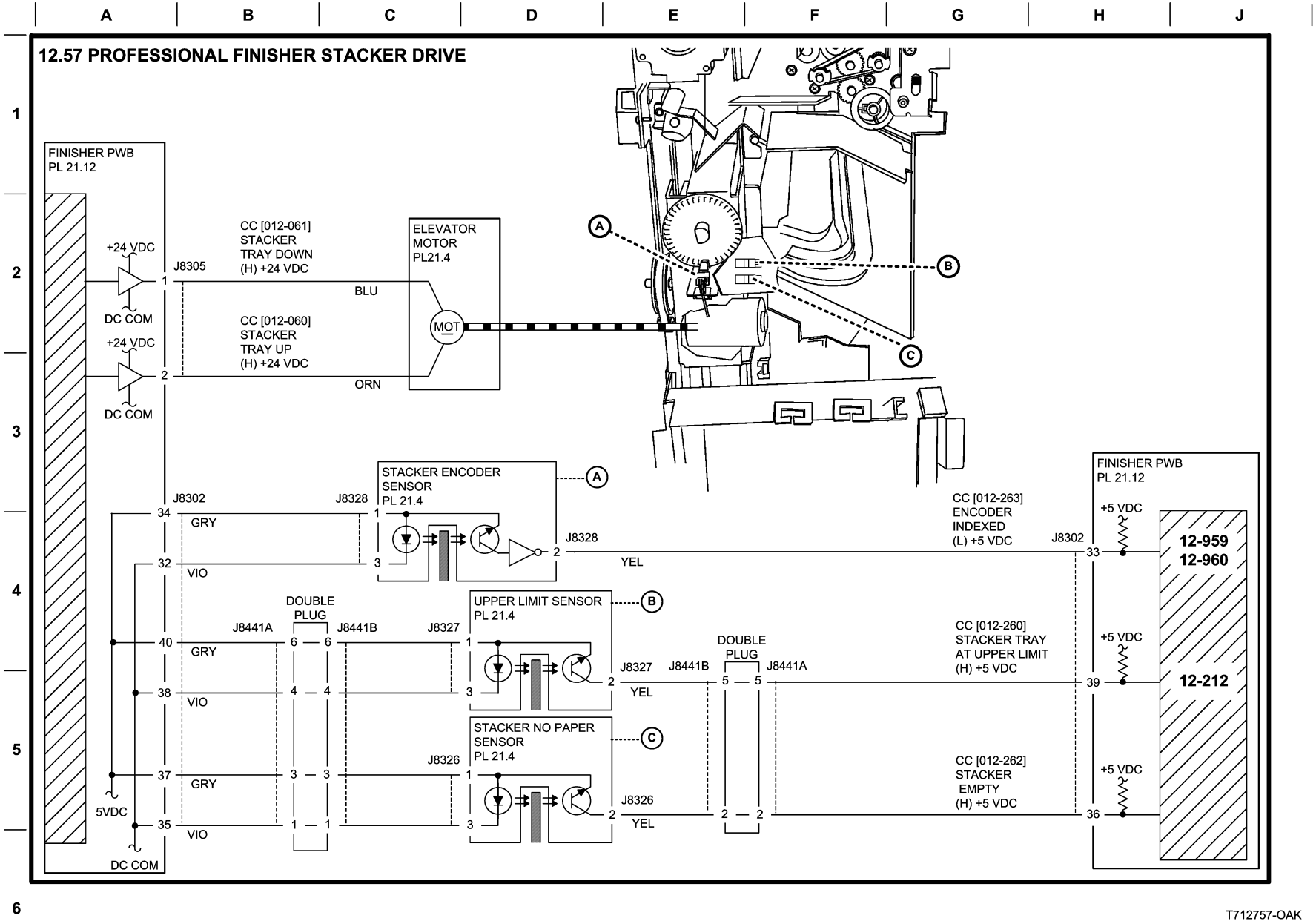

Figure 57 BSD 12.57 Professional Finisher Stacker Drive

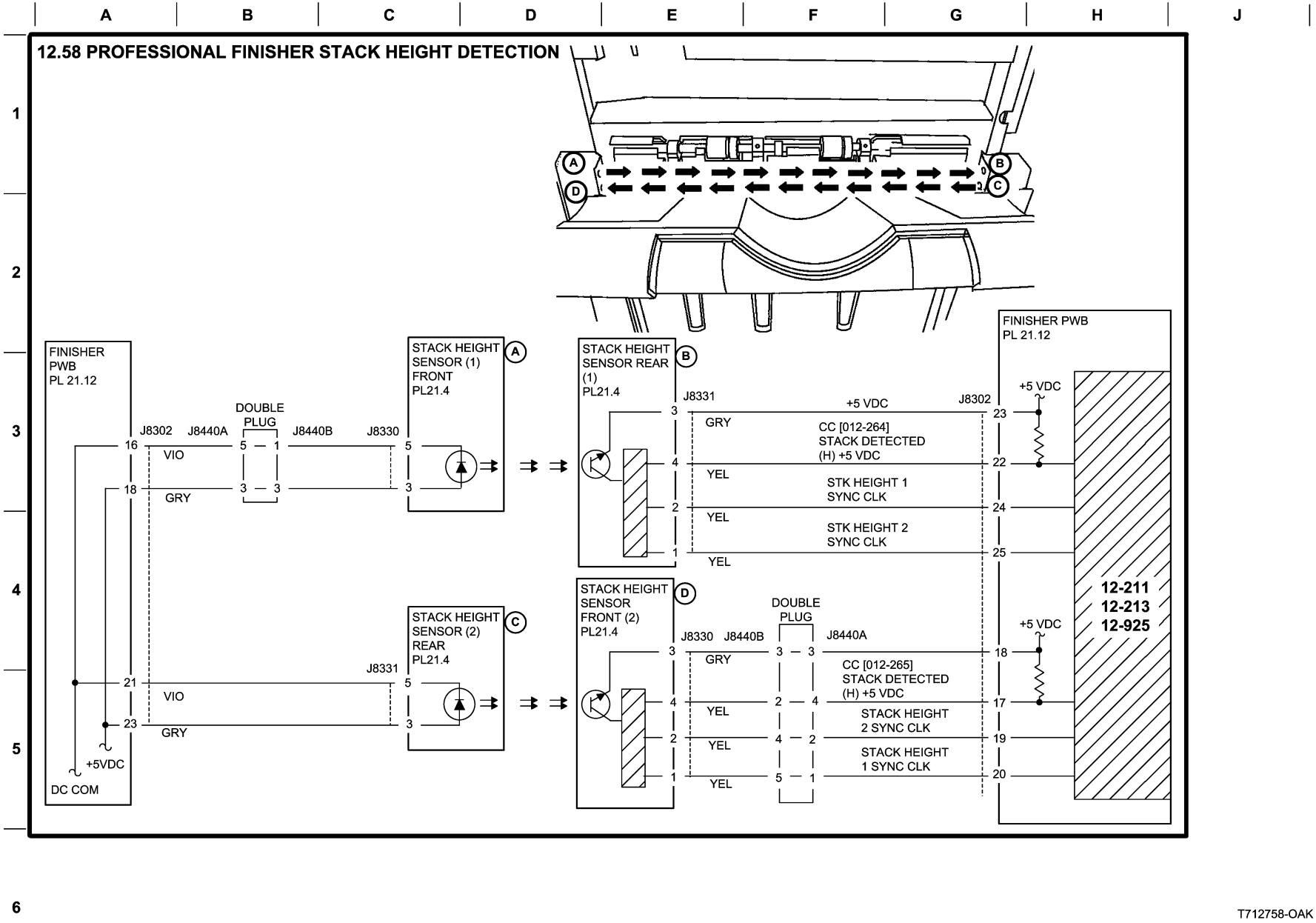

Figure 58 BSD 12.58 Professional Finisher Stack Height Detection